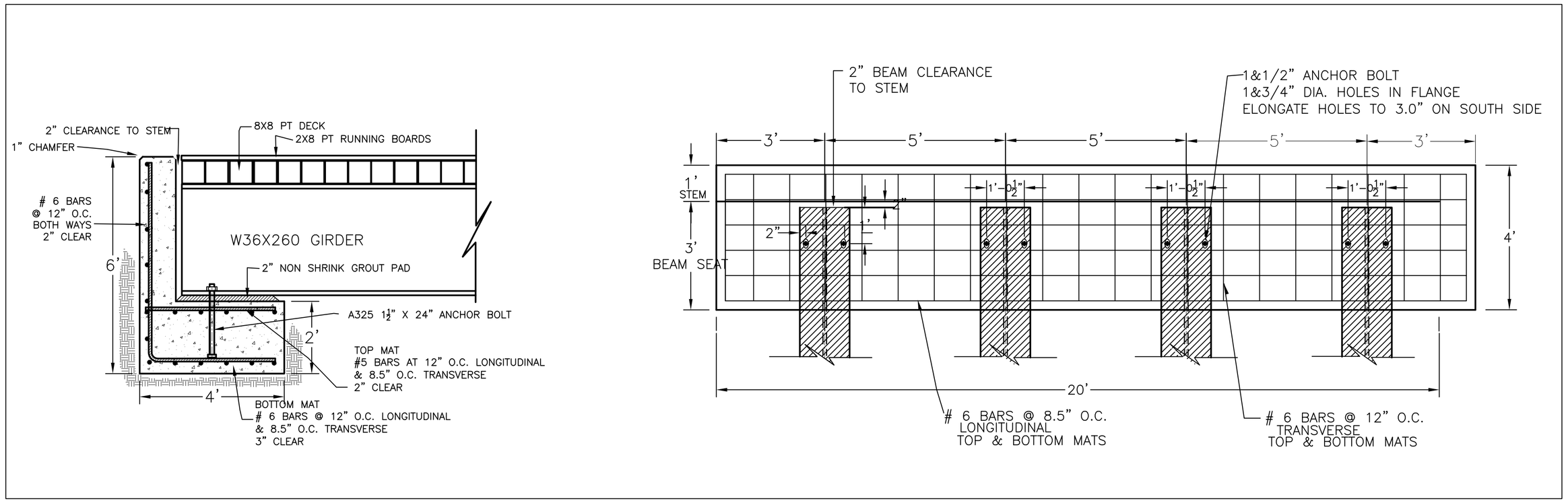

ABUTMENT DETAILS 1" = 2'

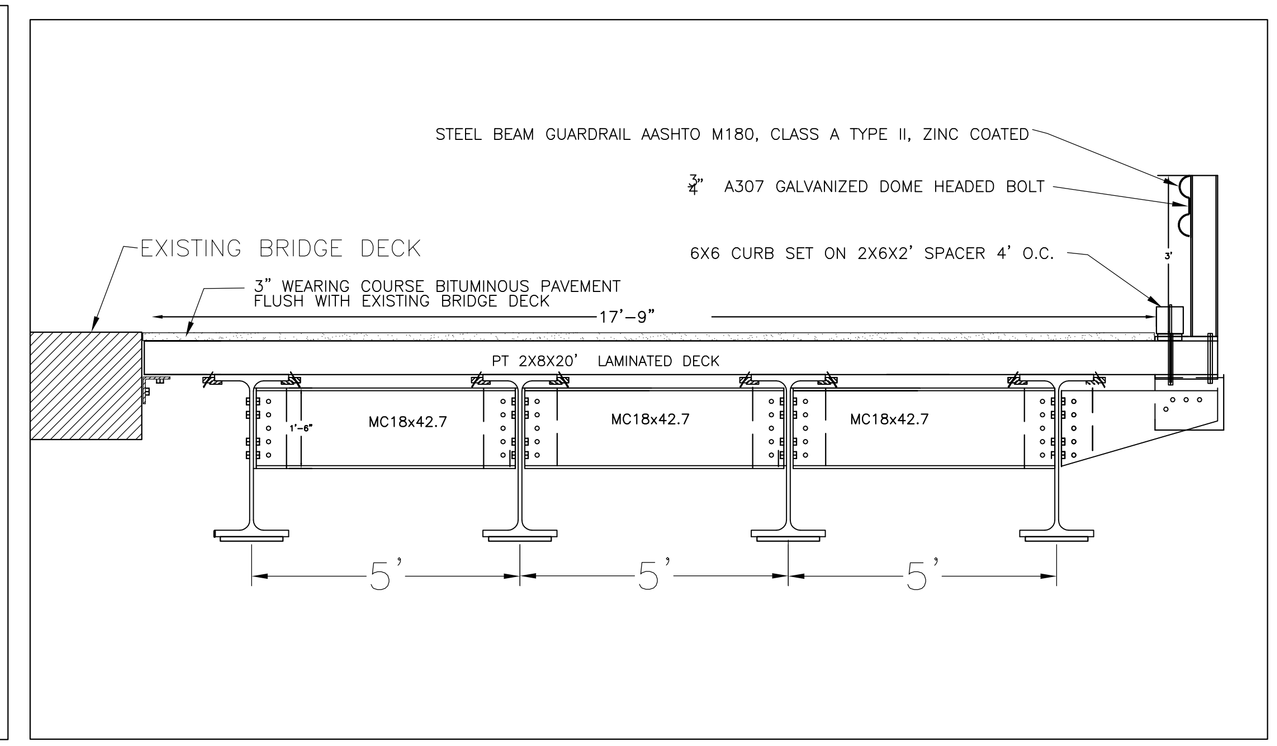

CROSS SECTION OF BRIDGE DECK 1" = 2'

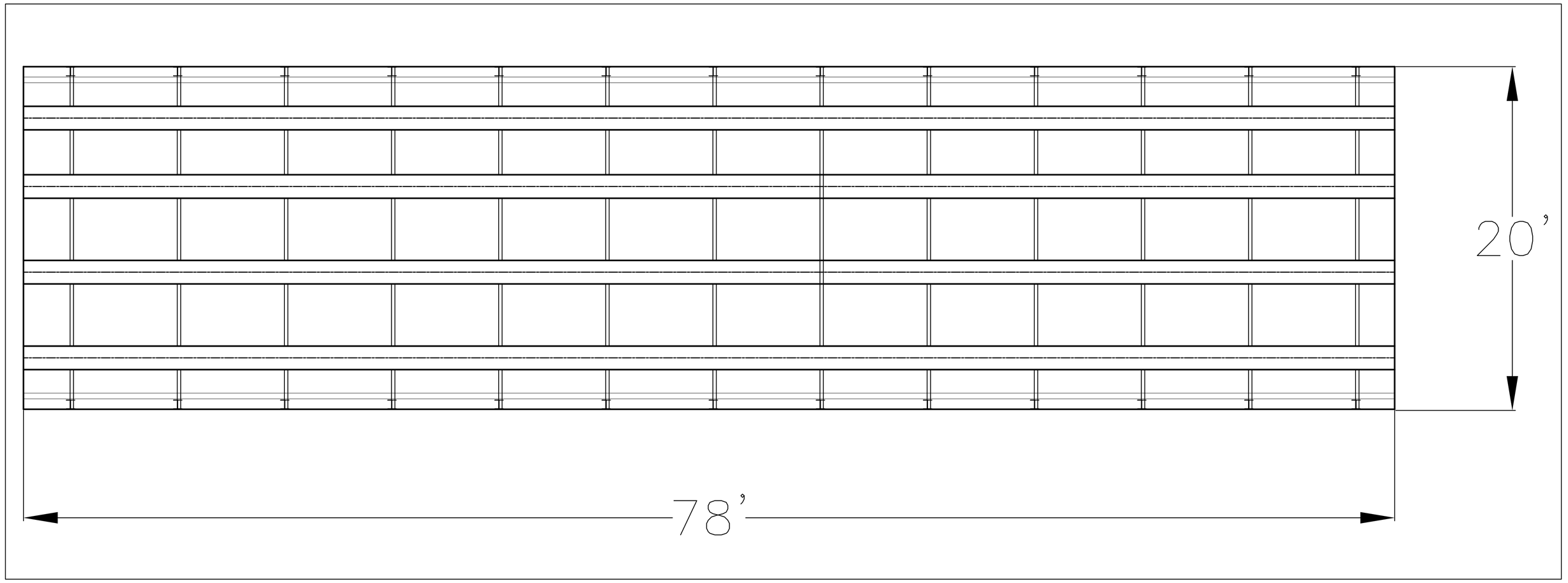

PLAN VIEW OF BRIDGE DECK

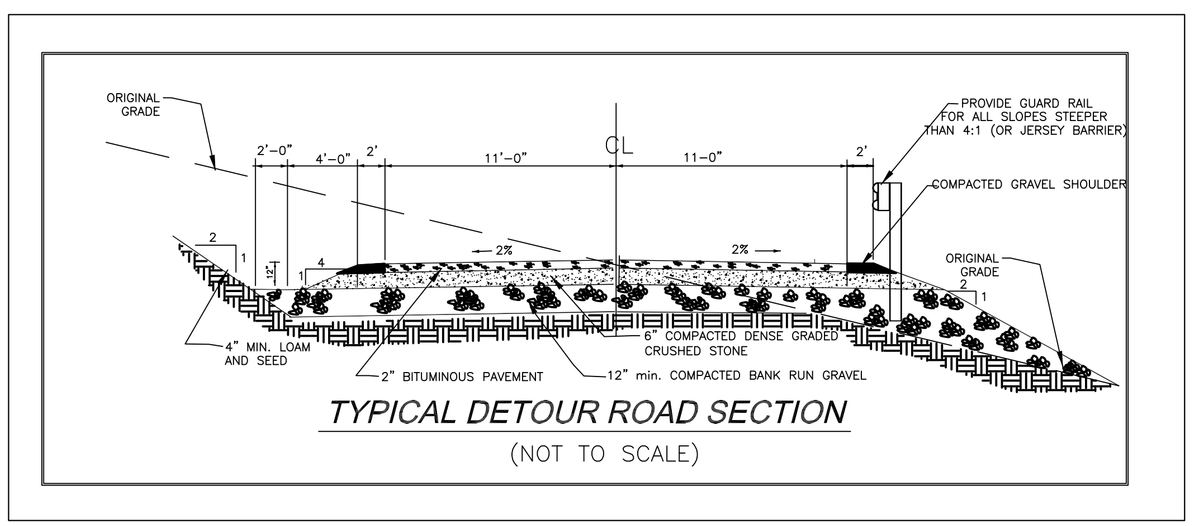

TYPICAL DETOUR ROAD SECTION

(NOT TO SCALE)

DETAILS: TEMPORARY BRIDGE

BRF 010-1(43)
ROUTE 9
MARLBORO, VT

DATE: 1-08-2014	

BELL ENGINEERING
CIVIL & ENVIRONMENTAL
17 ECHO COVE WAY-SPOFFORD, NH 03462
(603) 363-9966