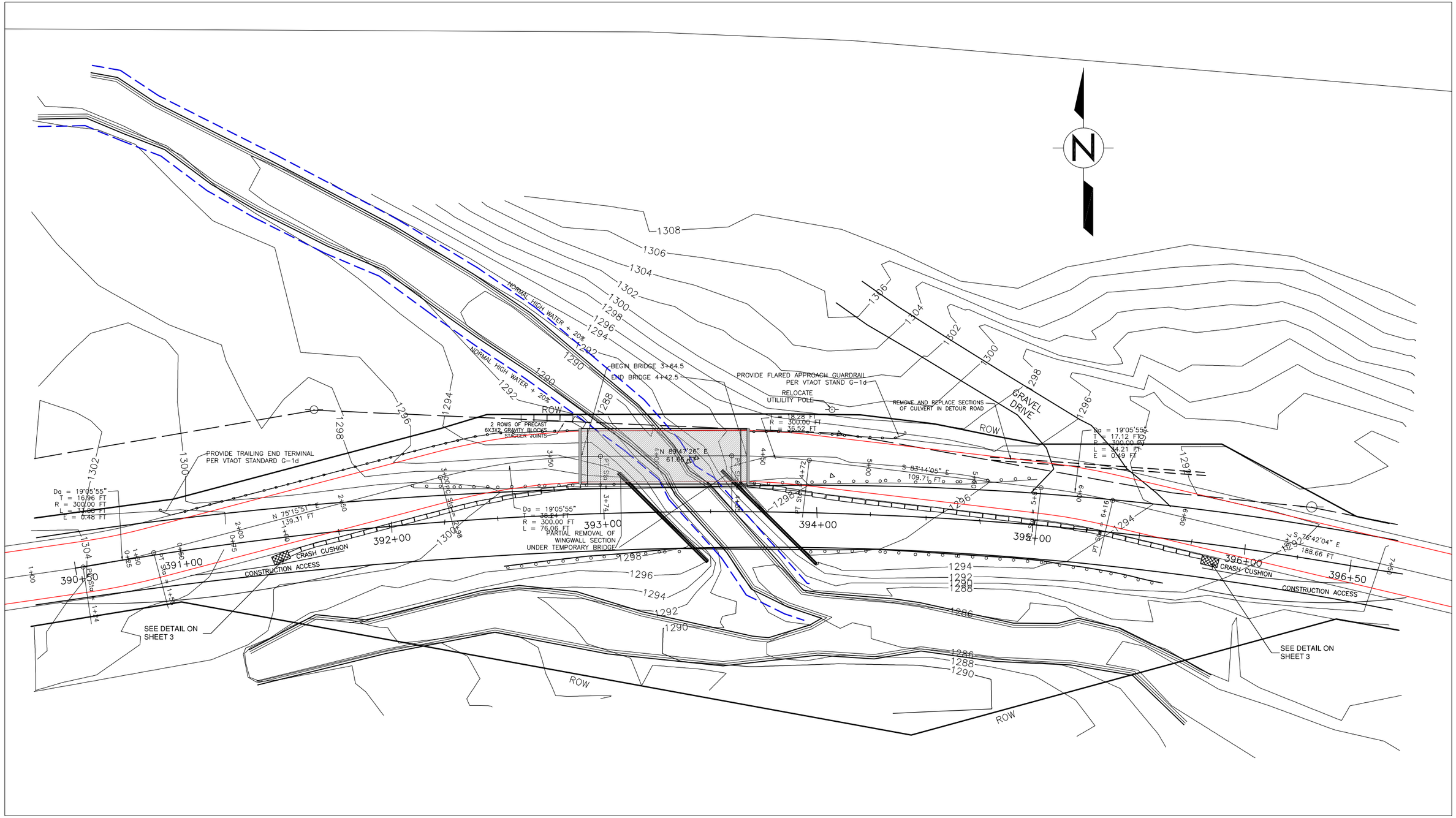

Scale: 1" = 20'

PLAN OF TEMPORARY BRIDGE, ABUTMENTS & BYPASS ROAD

BRF 010-1(43)

ROUTE 9

MARLBORO, VT

DATE: FEB. 20, 2014 *SHEET: 1*

AMENDED: 3-14-2014

STATE OF VERMONT
RONALD K. BELL
No. 6004
REGISTERED
PROFESSIONAL ENGINEER

BELL ENGINEERING
CIVIL & ENVIRONMENTAL
17 ECHO COVE WAY-SPOFFORD, NH 03462
(603) 363-9966

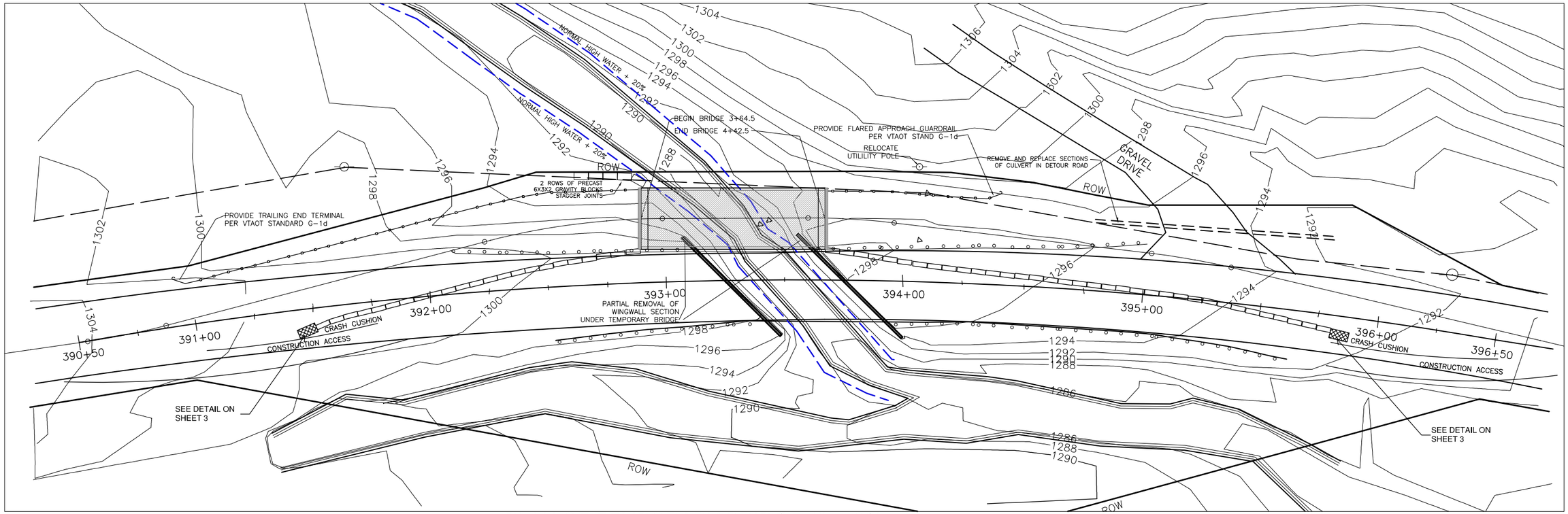

PLAN OF TEMPORARY BRIDGE 1" = 20'

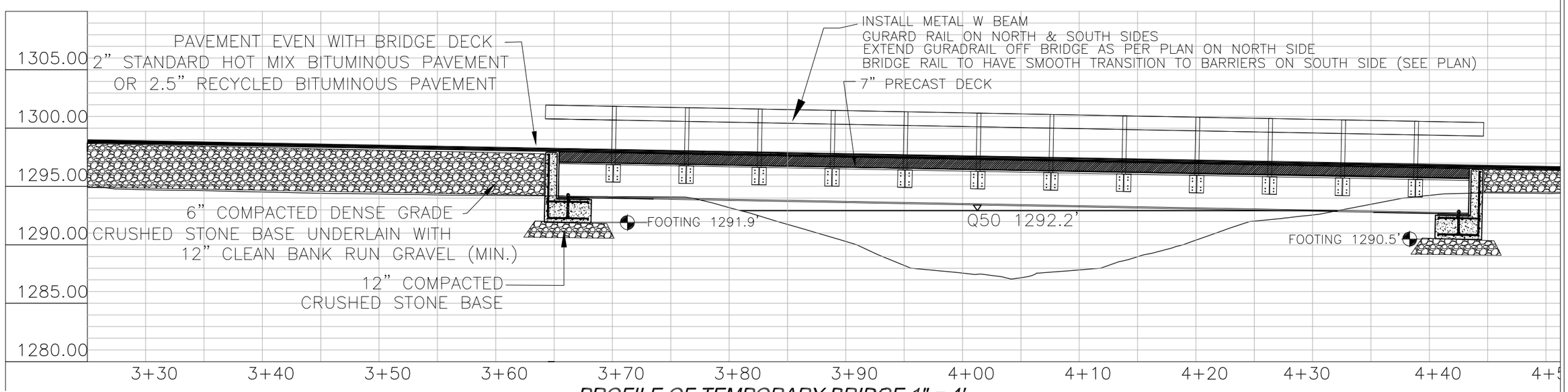

PROFILE OF TEMPORARY BRIDGE 1" = 4'

STATE OF VERMONT
RONALD K. BELL
No. 6294
REGISTERED PROFESSIONAL ENGINEER

PLAN AND PROFILE OF TEMPORARY BRIDGE, ABUTMENTS & BYPASS ROAD

RENAUD BROS. INC.
BRF 010-1(43)
ROUTE 9
MARLBORO, VT

DATE: 2-20-2014	
AMENDED: 3-14-2014	

BELL ENGINEERING
CIVIL & ENVIRONMENTAL
17 ECHO COVE WAY SPOFFORD, NH 03462
(603) 363-9966

SHEET
2

MATERIALS FOR FOOTING AND STEM WALL:
CONCRETE FOR FOOTING AND STEM WALL
TO BE HP CLASS B WITH 3,500 PSI 28-DAY COMPRSSIVE STRENGTH
REINFORCING STEEL TO HAVE Fb= 60 KSI

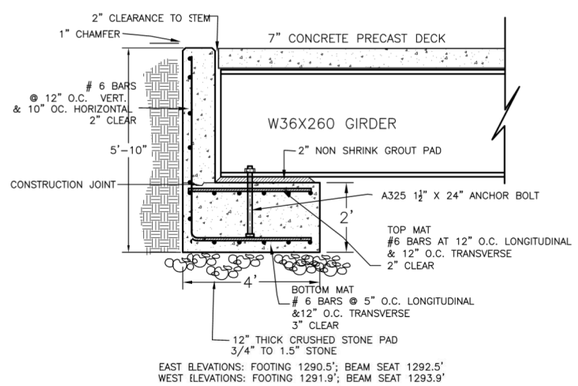

EAST ELEVATIONS: FOOTING 1290.5'; BEAM SEAT 1292.5'
WEST ELEVATIONS: FOOTING 1291.9'; BEAM SEAT 1293.9'

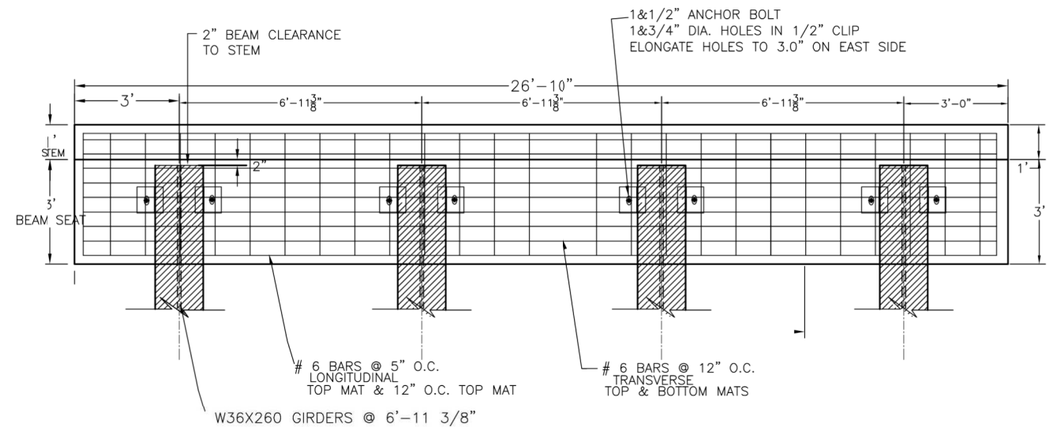

ABUTMENT DETAILS 1" = 2'

DESIGN VELOCITY 35 mph
7 barrels/array

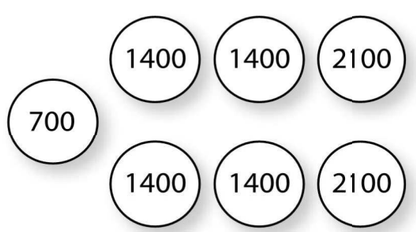

GUARDRAIL DEFLECTION CHART
(PER AASHTO - ROADSIDE DESIGN GUIDE - LATEST EDITION)

TYPE		GR POST SPACING	DEFLECTION
THREE CABLE	W/STEEL POSTS	16' - 0"	11' - 6"
	W/WOODEN POSTS	12' - 6"	11' - 6"
W-BEAM	W/STRONG POST	6' - 3"	3'
BOX BEAM		6' - 0"	5'
THRIE BEAM	W/STRONG POST	6' - 3"	2'

THIS CHART LISTS THE THEORETICAL MAXIMUM DEFLECTION DISTANCE, UPON IMPACT, OF DIFFERENT TYPES OF GUARDRAIL AND VARIOUS POST SPACINGS.

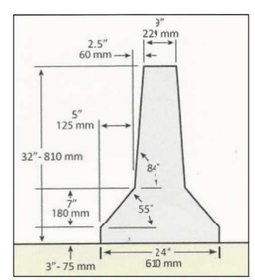

F-SHAPE BARRIER DIMENSIONS

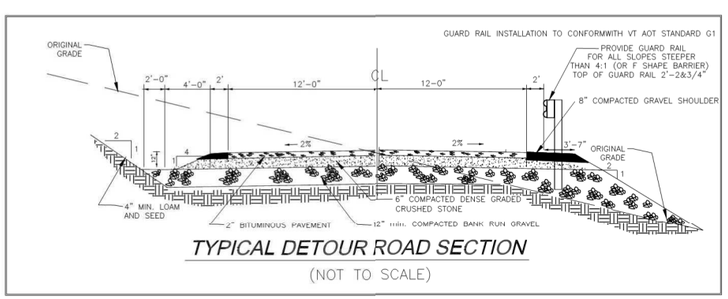

TYPICAL DETOUR ROAD SECTION
(NOT TO SCALE)

STATE OF VERMONT
RONALD K. BELL
No. 6994
REGISTERED PROFESSIONAL ENGINEER

DETAILS: TEMPORARY BRIDGE

BRF 010-1(43)
ROUTE 9
MARLBORO, VT

DATE: 2-20-2014	
AMENDED: 3-14-2014	

BELL ENGINEERING
CIVIL & ENVIRONMENTAL
17 ECHO COVE WAY-SPOFFORD, NH 03462
(603) 363-9966

SHEET
3

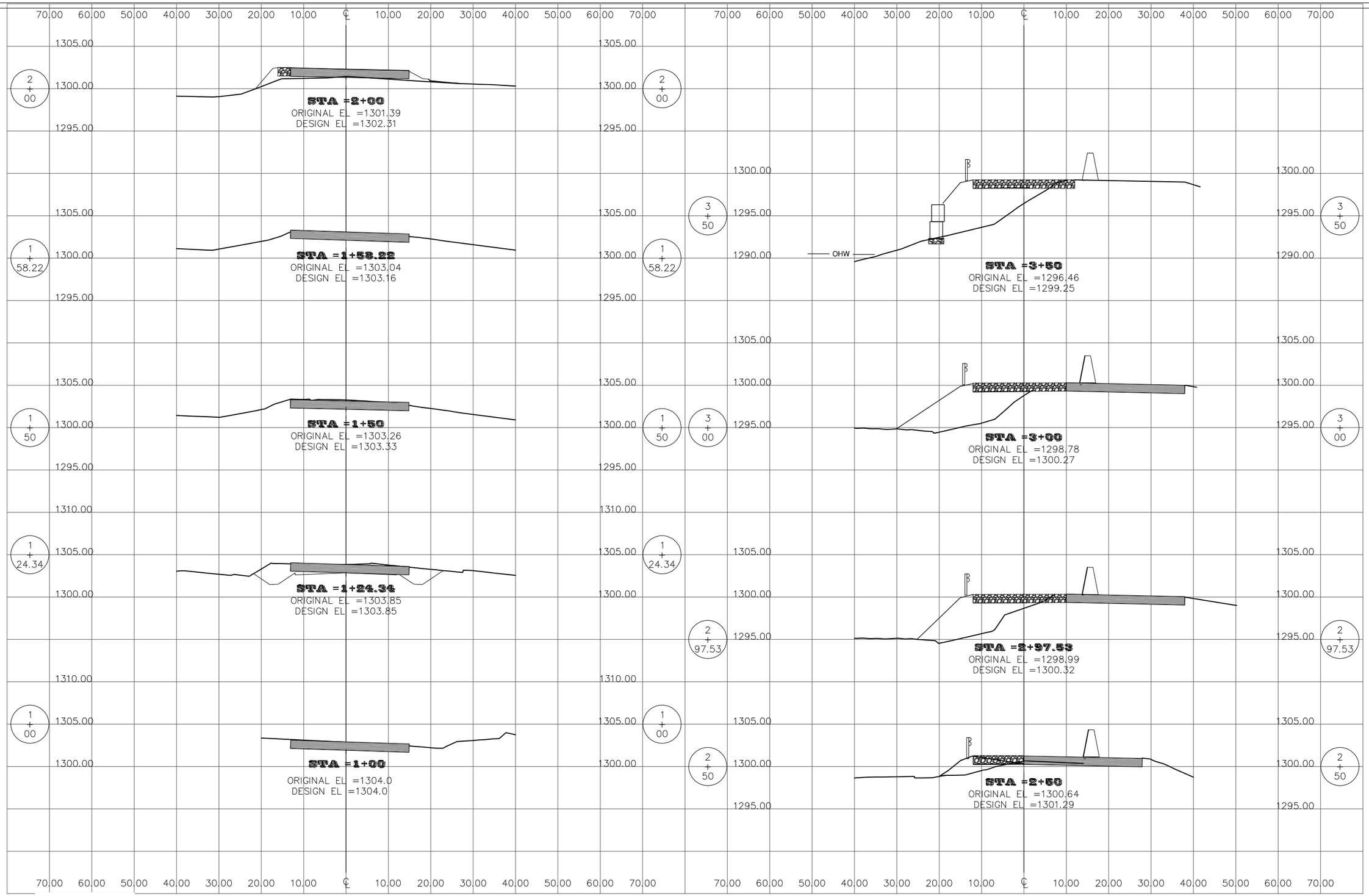

STATE OF VERMONT
RONALD R. BELL
No. 8204
REGISTERED
PROFESSIONAL ENGINEER

CROSS SECTIONS

RENAUD BROS. INC.
BRF 010-1(43)
ROUTE 9
MARLBORO, VT

DATE: 2-20-2014

BELL ENGINEERING
CIVIL & ENVIRONMENTAL
17 ECHO COVE WAY SPOFFORD, NH 03462
(603) 363-9966

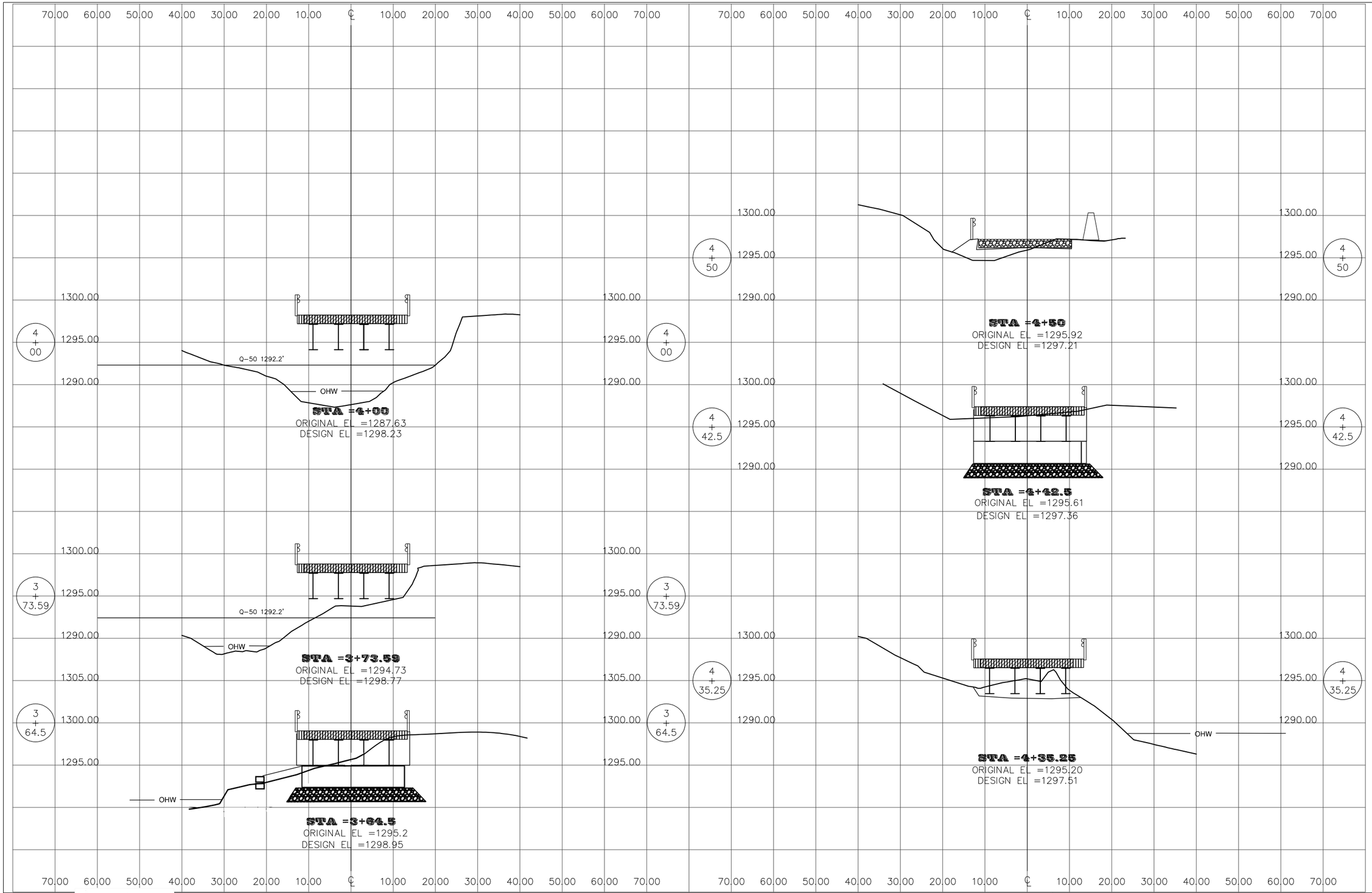

STATE OF VERMONT
RONALD K. BELL
No. 8001
REGISTERED
PROFESSIONAL ENGINEER

CROSS SECTIONS

RENAUD BROS. INC.
BRF 010-1(43)
ROUTE 9
MARLBORO, VT

DATE: 2-03-2014	

BELL ENGINEERING
CIVIL & ENVIRONMENTAL
17 ECHO COVE WAY SPOFFORD, NH 03462
(603) 363-9966

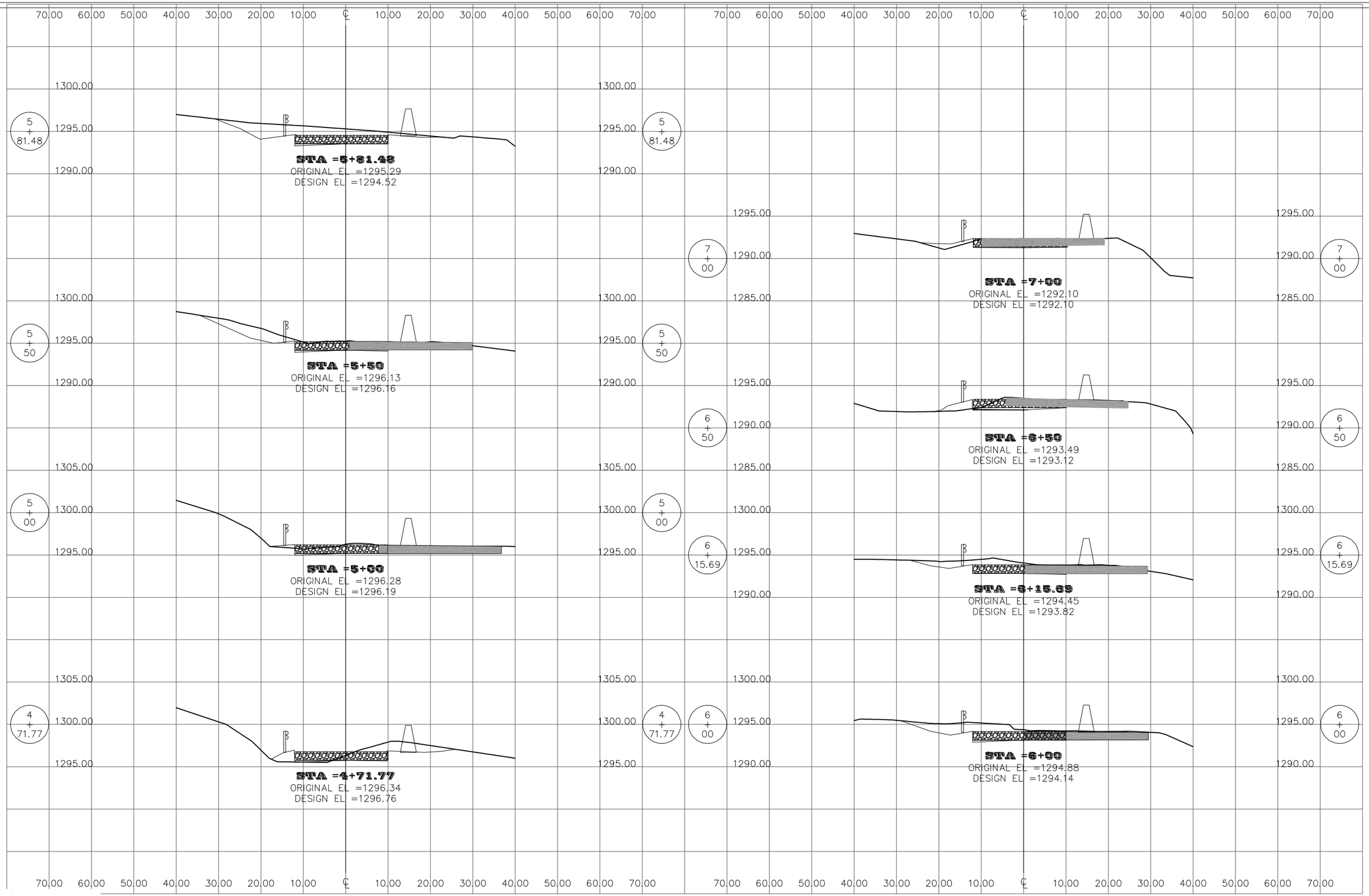

STATE OF VERMONT
RONALD K. BELL
No. 6024
REGISTERED
PROFESSIONAL ENGINEER

CROSS SECTIONS

RENAUD BROS. INC.
BRF 010-1(43)
ROUTE 9
MARLBORO, VT

DATE: 2-20-2014

BELL ENGINEERING
CIVIL & ENVIRONMENTAL
17 ECHO COVE WAY·SPOFFORD, NH 03462
(603) 363-9966

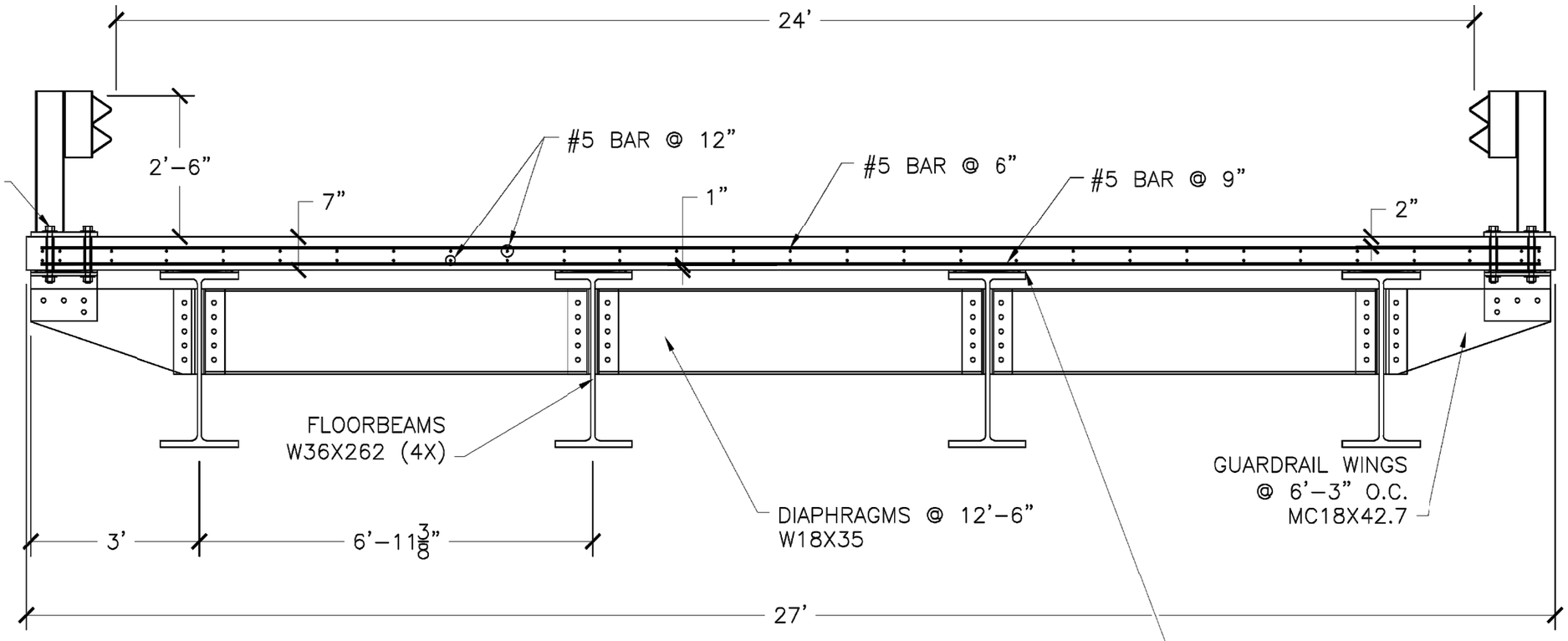

TEMP. BRIDGE SECTION

N.T.S.

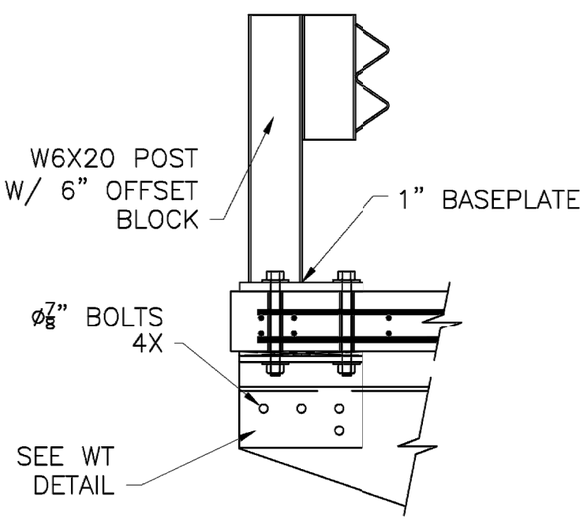

GUARDRAIL/SLAB CONN. DETAIL

N.T.S

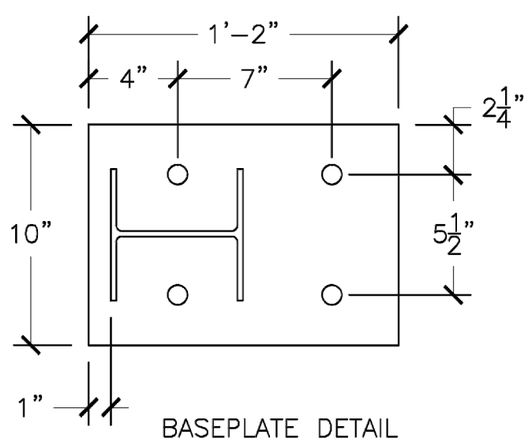

BASEPLATE DETAIL

N.T.S.

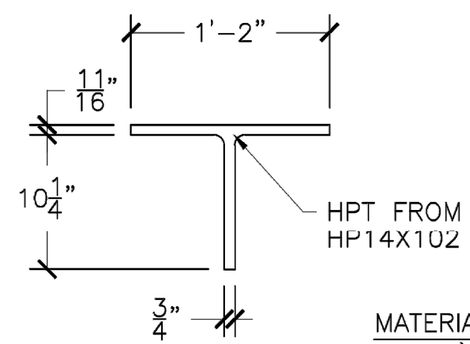

WT DETAIL

N.T.S.

MATERIAL NOTES:

1) REBAR TO BE GR. 60 MIN.
2) CONCRETE TO BE 5,000 PSI MIN.

REV.			
	NO.	DATE	COMMENTS
	1	3/6/14	GUARDRAIL DETAILS
DATE: 2/21/2014	2	3/17/14	REBAR COVERAGE
DRAWN BY: A.D.			
CHK'D BY: C.E.			

JOB NAME: MARLBORO BRO 1442(35)

JOB NO:

SHEET NAME: TEMP. BRIDGE SECTION

B. RENAUD BROS. INC.
BIDG. SLAB & FOUNDATION
MARCH 17, 20

255 FT. VIRGINIA ST. VERNON VT. 05354
PH.(802)257-7989 FAX(802)257-7508

SHEET: 7

C:\Users\ADunklee\Documents\Works In Progress 2014\MARLBORO BRF010-1 (43)\TEMPORARY BRIDGE.dwg, 3/17/2014 10:30:59 AM

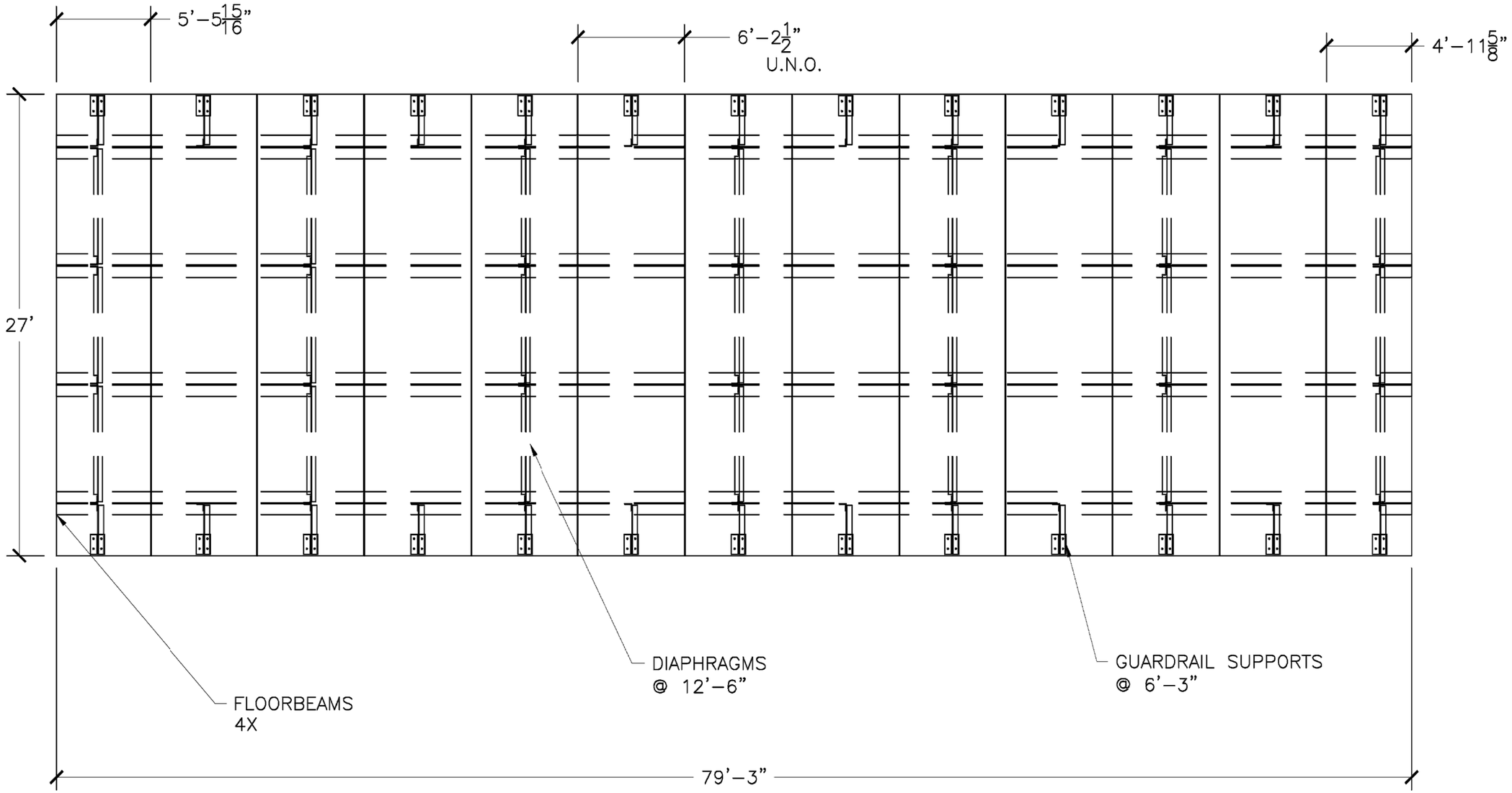

BRIDGE FRAMING PLAN
NOT TO SCALE

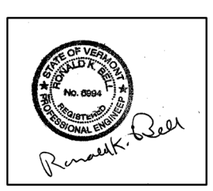

		REV.		
		NO.	DATE	COMMENTS
DATE:	2/21/2014			
DRAWN BY:	A.D.			
CHK'D BY:	C.E.			

JOB NAME:	MARLBORO BRO 1442(35)
JOB NO:	
SHEET NAME:	BRIDGE PLAN

RENAUD BROS. INC.
STEEL SALES & FABRICATION
285 FT. BERGMAN RD. VERNON VT., 05354
PH. (802) 257-7585 FAX (802) 257-7508

SHEET: 8

C:\Users\ADunklee\Documents\Works In Progress 2014\MARLBORO BRF010-1 (43)\TEMPORARY BRIDGE.dwg, 3/17/2014 10:30:59 AM

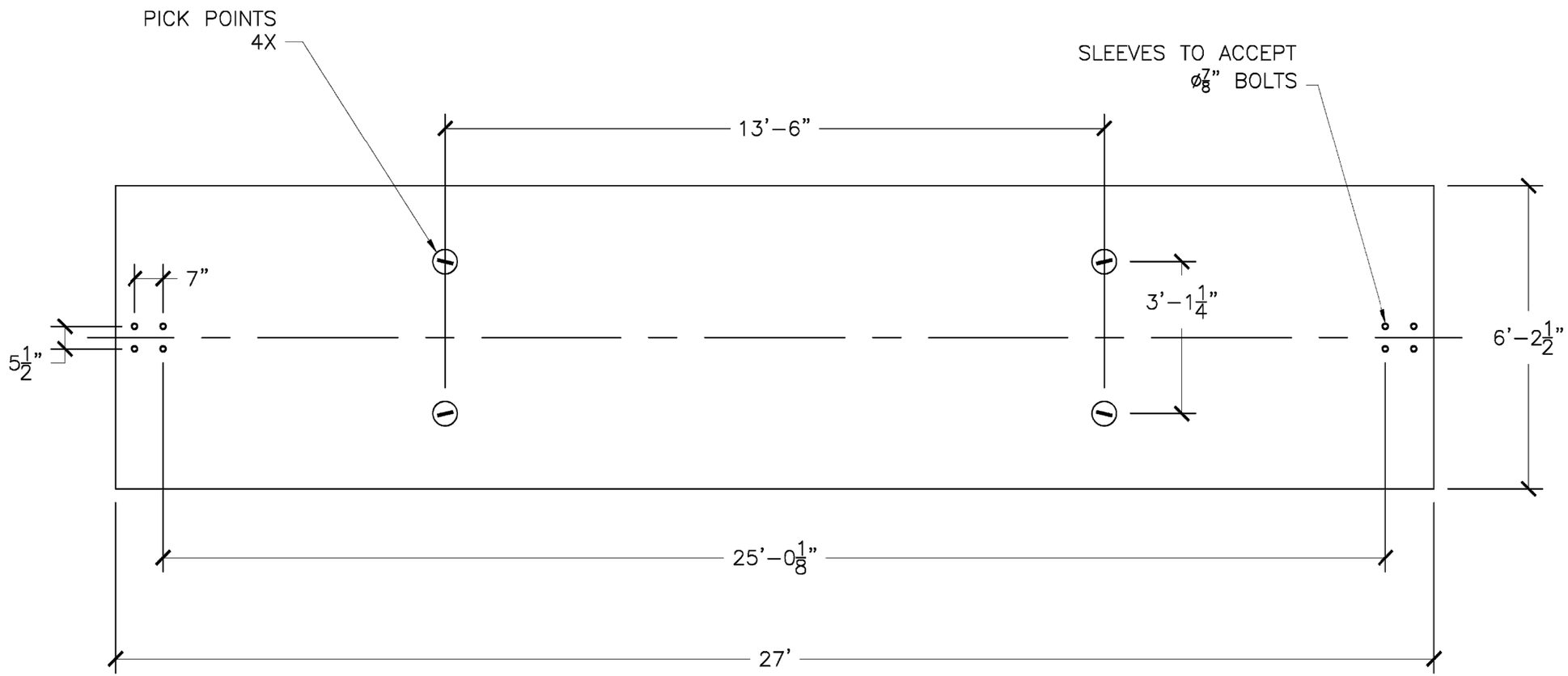

SLAB PLAN-VIEW
NOT TO SCALE

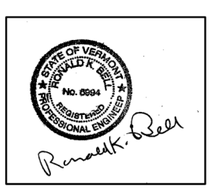

		REV.		
		NO.	DATE	COMMENTS
DATE:	2/21/2014			
DRAWN BY:	A.D.			
CHK'D BY:	C.E.			

JOB NAME:	MARLBORO BRO 1442(35)
JOB NO:	
SHEET NAME:	SLAB PLAN

RENAUD BROS. INC.
STEEL SALES & FABRICATION
PRINTS VT. OH
285 FT. BRIDGMAN RD. VERNON VT., 05354
PH. (802) 257-7585 FAX (802) 257-7508

SHEET: 9

C:\Users\ADunklee\Documents\Works In Progress 2014\MARLBORO BRF010-1 (43)\TEMPORARY BRIDGE.dwg, 3/17/2014 10:30:59 AM

"W" BEAM GUARDRAIL WITH STEEL POSTS

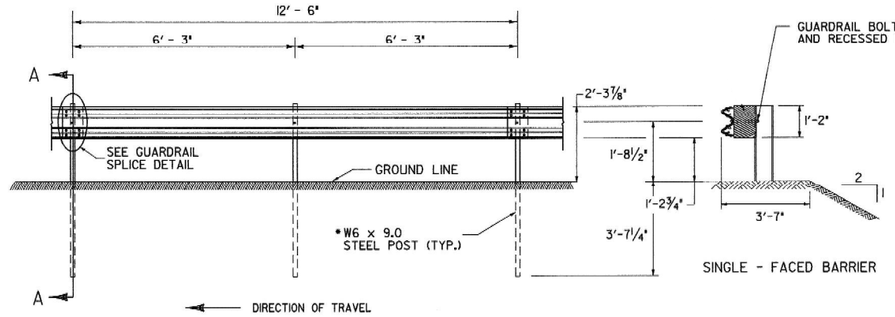

ELEVATION FROM ℄ OF ROAD

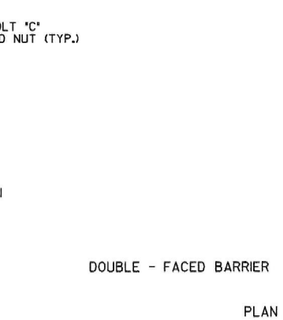

SECTION A -A

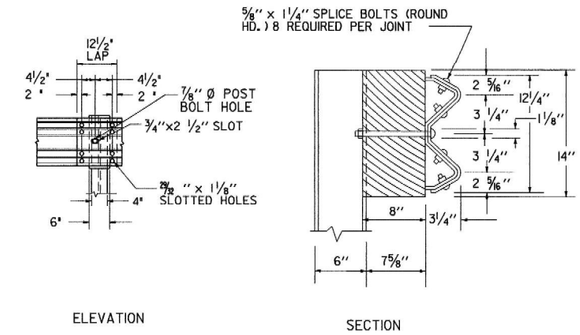

GUARDRAIL SPLICE DETAIL

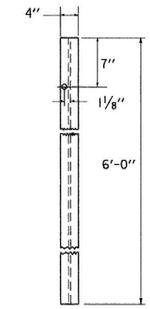

FRONT FACE STEEL POST

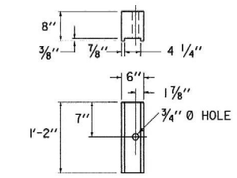

POST FACE
MODIFIED WOOD BLOCKOUT- ROUTED
6" X 8" X 1'-2"
FOR USE W/ STEEL POSTS ONLY

NOTES:
1. BLOCKS SHALL BE MADE OF TIMBER WITH A STRESS GRADE OF 1200 PSI OR MORE. TESTING SHALL BE IN ACCORDANCE WITH WEST COAST LUMBER INSPECTION BUREAU, SOUTHERN PINE INSPECTION BUREAU OR OTHER APPRPRIATE ASSOCIATION. TIMBER FOR BLOCKS SHALL BE ROUGH SAWN (UNPLANED) WITH DIMENSIONS INDICATED. THE SIZE TOLERANCE OF ROUGH SAWN BLOCKS IN THE DIRECTION OF THE BOLT HOLES SHALL BE NOT MORE THAN +/- ¼".
2. SUPPLY WOOD BLOCKS PER AASHTO M 168.
3. TREAT WITH PRESERVATIVE PER AASHTO M 133.
4. BLOCKOUTS MAY ALSO BE MADE OF APPROVED ALTERNATIVE MATERIAL.

GUARDRAIL DELINEATOR

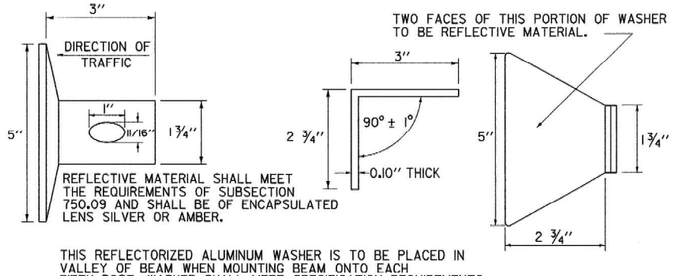

THIS REFLECTORIZED ALUMINUM WASHER IS TO BE PLACED IN VALLEY OF BEAM WHEN MOUNTING BEAM ONTO EACH FIFTH POST. WASHER SHALL MEET SPECIFICATION REQUIREMENTS FOR A.S.T.M. B-209 ALLOY 5052-H32

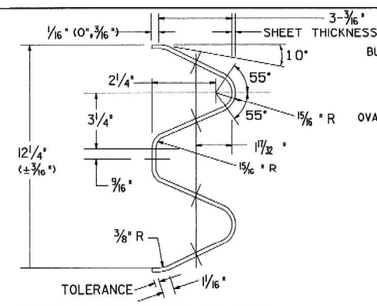

ARTBA RE-3(2@6'-3"-12'-6" CLASS A, TYPE 1)-73

TYPICAL GUARDRAIL SECTION

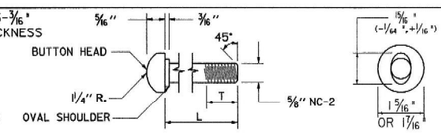

GUARDRAIL BOLT

GUARDRAIL BOLTS				FASTENER USED IN	
BOLT DES.	ARTBA REF. NO.	L	T (MIN.)	STEEL POSTS	WOOD POSTS
"A"	F-3[1¼]-76	1¼"	1"	X	X
"C"	F-3[9½]-76	9½"	1¾"	X	
"D"	F-3[18]-76	18"	2½"		X
"F"	F-3[25]-76	25"	2"		X

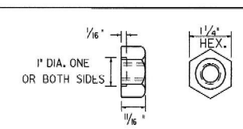

RECESSED NUT FOR GUARDRAIL BOLT

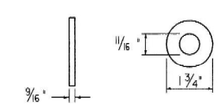

WASHER FOR 5/8" BOLTS
ARTBA F-13-73
NOTE: WASHER IS USED UNDER RECESSED NUT WHERE GUARDRAIL BOLT IS USED WITH WOOD POSTS.

GENERAL NOTES:

1. GUARDRAIL SHALL MEET THE REQUIREMENTS OF AASHTO M 180, CLASS A, TYPE I, UNLESS OTHERWISE DESIGNATED
2. GUARDRAIL SHALL BE SINGLE FACED UNLESS OTHERWISE DESIGNATED
3. GUARDRAIL SECTIONS SHALL BE LAPPED IN THE DIRECTION OF TRAFFIC FLOW FOR THE LANE NEAREST THE GUARDRAIL.
4. FOR DESCRIPTION AND SPECIFICATION OF PARTS IDENTIFIED BY (ARTBA ...) AND OTHER DETAILS OF POSTS, POST ACCESSORIES, FASTENERS & RAIL ELEMENTS, SEE AASHTO-AGC-ARTBA JOINT TASK FORCE NO. 13, TITLED "A GUIDE TO STANDARDIZED HIGHWAY BARRIER HARDWARE". LATEST EDITION.
5. STANDARD STEEL BEAM TO BE ⅛" AND THE HEAVY DUTY TO BE 9/64" THICK.

OTHER STANDARD REQUIRED G-1d

STEEL BEAM GUARDRAIL WITH STEEL POSTS
STEEL BEAM GUARDRAIL WITH WOOD POSTS

VERMONT AGENCY OF TRANSPORTATION

STANDARD

G-1

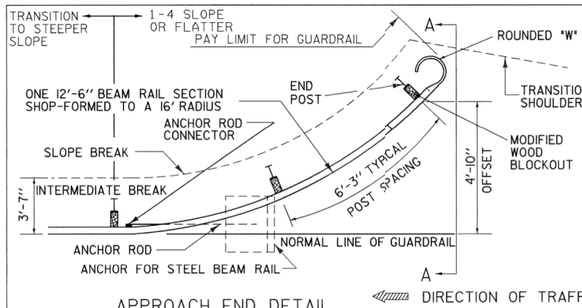

APPROACH END DETAIL

NHS APPROVED FOR USE WHERE DESIGN SPEED IS 40 OR LESS MPH

NON-NHS APPROVED FOR USE WHERE DESIGN SPEED IS 50 OR LESS MPH

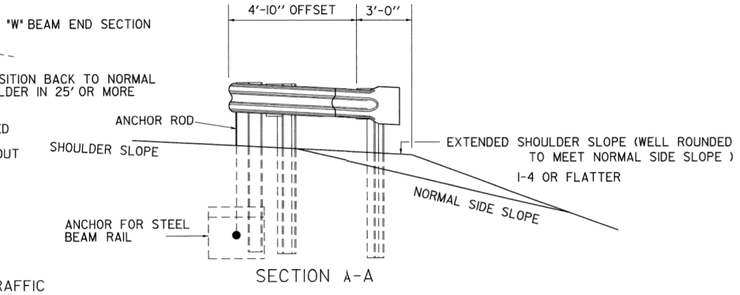

SECTION A-A

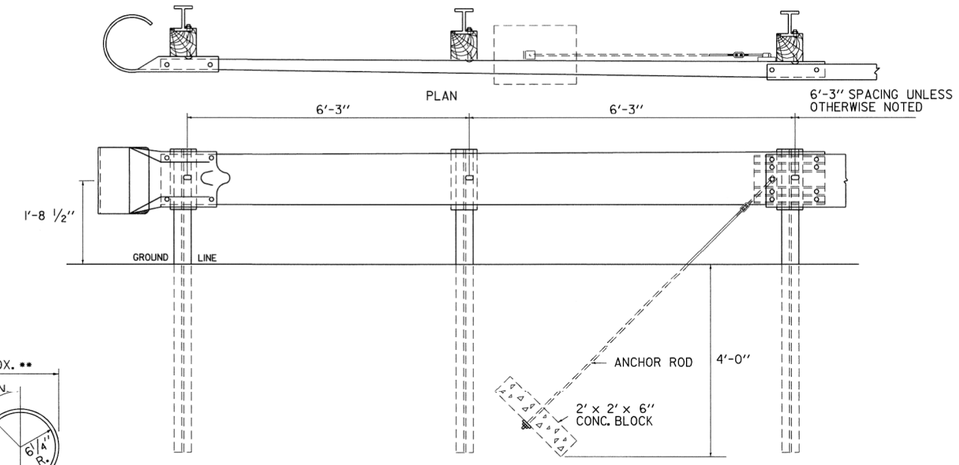

ASSEMBLY ELEVATION

TRAILING END TERMINAL FOR USE ON ONE-WAY HIGHWAYS

GENERAL NOTES:

1. ALL METAL PARTS SHALL BE GALVANIZED.
2. ALL WOOD POSTS SHALL BE GIVEN A PRESERVATIVE TREATMENT.
3. DETAILS PERTINENT TO THE STANDARD INSTALLATION OF "W" BEAM SECTIONS WILL BE FOUND ON STANDARD DRAWING G-1.
4. FOR DESCRIPTION AND SPECIFICATIONS OF PARTS IDENTIFIED BY "(ARTBA...)" AND OTHER DETAILS OF POSTS, POST ACCESSORIES, FASTENERS AND RAIL ELEMENTS, SEE AASHTO-AGC-ARTBA JOINT TASK FORCE NO. 13, TITLED "A GUIDE TO STANDARDIZED HIGHWAY BARRIER HARDWARE", LATEST EDITION.

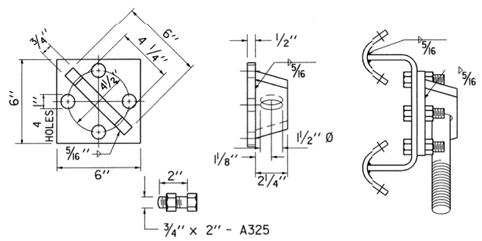

ANCHOR ROD CONNECTOR

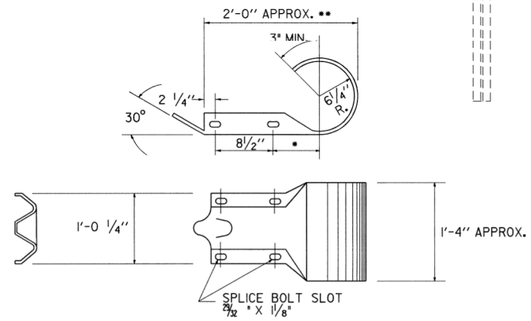

(ARTBA RE-6-79)

ROUNDED "W" BEAM END SECTION

* THIS DIMENSION IS 7 1/2" IN RE-7-79. IF THE DIMENSION IS USED IN THIS PART, IT WILL GIVE AN ACCEPTABLE OVERALL LENGTH (**) OF APPROXIMATELY 2'- 11/2."

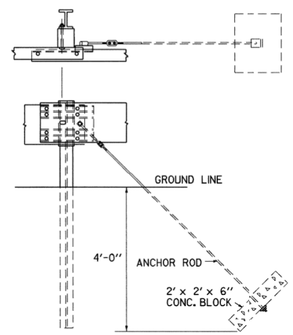

ANCHOR ROD

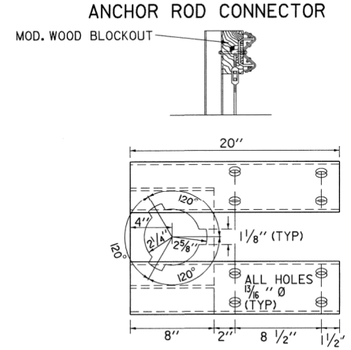

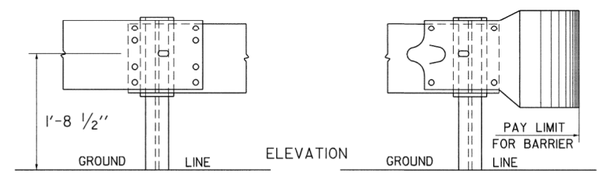

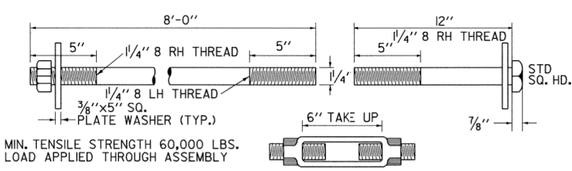

MIN. TENSILE STRENGTH 60,000 LBS.
LOAD APPLIED THROUGH ASSEMBLY

TURNBUCKLE

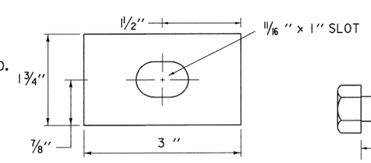

RECTANGULAR GUARDRAIL PLATE WASHER

(ARTBA F-12-73)

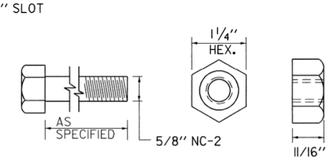

5/8" HEX NUT AND BOLT "F"

(ARTBA F-8-76)

FASTENER DETAILS

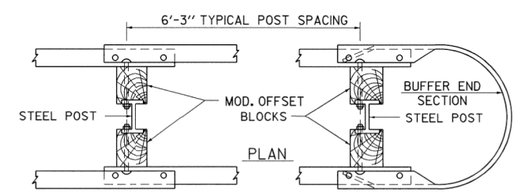

STEEL BEAM MEDIAN BARRIER

NOTE: TO BE USED OUTSIDE CLEAR ZONE ONLY.

OTHER STANDARD REQUIRED G-1

REVISIONS AND CORRECTIONS

JUNE 1, 1994 - REISSUED, WITHOUT CHANGE, UNDER NEW SIGNATURES.

JAN.3,2000 - UPDATED TO REFLECT METRIC STD. CHANGES

APPROVED

DIRECTOR OF PROJECT DEVELOPMENT

ROADWAY AND TRAFFIC DESIGN ENGINEER

STEEL BEAM GUARDRAIL APPROACH END TERMINAL
STEEL BEAM GUARDRAIL TRAILING END TERMINAL
ANCHOR FOR STEEL BEAM GUARDRAIL
STEEL BEAM MEDIAN BARRIER

VERMONT AGENCY OF TRANSPORTATION

STANDARD

G-1d