CONC DECK

010-1 (43)

BELL ENGINEERING
CIVIL & ENVIRONMENTAL
17 ECHO COVE WAY
SPOFFORD, NEW HAMPSHIRE 03462
(603) 363-9966

PROJECT NAME/ LOCATION: Brattl. BRP ~~1442 (35)~~
SHEET #: 1 OF 9
CALCULATED BY: Ron Bell DATE: 2-20-14
CHECKED BY: DATE:
SCALE: NTS

TEMPORARY DECK DESIGN

STATE OF VERMONT
RONALD K. BELL
No. 6034
REGISTERED PROFESSIONAL ENGINEER

AASHTO LRFD
9.7.5 - PRECAST DECK ON GIRDERS

MIN. DEPTH = 7.0 in.

9.7.2.5 - REINFORCEMENT REQUIREMENTS:
MIN. BOT LAYER = 0.27 in²/ft
MIN. TOP LAYER = 0.18 in²/ft

FOR ABSOLUTE MIN. 7.0 in. DECK & 2.0 INCH TOP COVER
1.0 INCH BOT "
TO PROVIDE A REINFORCED CORE = 4.0 in.

C9.7.2.5 - Commentary: tests indicate that 0.2% reinforcement in each of four layers based on effective depth d satisfies strength requirements. However, the conservative value of 0.3% of gross area is specified for better crack control. For 7" total depth provide approx 0.25% of total gross area for bottom positive reinforcement min.

NOTE AASHTO LRFD ALLOWS 3 METHODS OF DECK DESIGN FOR PRIMARY REINFORCEMENT ⊥ TO BRIDGE DECK. THIS DESIGN USES THE APPROXIMATE ELASTIC METHOD IN WHICH THE DECK IS DESIGNED FOR FLEXURE RESISTANCE & CONTROL OF CRACKING.

SHEAR DESIGN + FATIGUE + FRACTURE DESIGN IS NOT REQUIRED PER C 4.6.2.1.6

BRF 010-1 (43)

BELL ENGINEERING
CIVIL & ENVIRONMENTAL
17 ECHO COVE WAY
SPOFFORD, NEW HAMPSHIRE 03462
(603) 363-9966

PROJECT NAME/ LOCATION: ~~BRO 1412 (35)~~
SHEET #: 2 OF 9
CALCULATED BY: Ron Bell DATE: 2-20-14
CHECKED BY: DATE:
SCALE:

STATE OF VERMONT RONALD R. BELL No. 6034 REGISTERED PROFESSIONAL ENGINEER

FOR PRECAST CONCRETE $f'_c = 5$ KSI

$f_y = 60$ KSI

NOTE: M STRENGTH I GOVERNS THIS DESIGN DUE TO LARGER FACTORS ON LL+IM (1.75 VS 1.0)

BEAM SPACING: 6'-11 3/8"

MIN. THICKNESS

$$w_{DC} = \frac{(0.150\,K)}{ft^3} \times \frac{7}{12}'' \times (1\,ft) = 0.088\,\frac{K}{ft}$$

$$M_{DC} = \frac{0.088\,K/ft \times 6.948^2}{10} = 0.425\ K\text{-}ft$$

FROM APPENDIX 4 $M_{LL+IM} = 5.21$ K-FT

$$M_{strength\,I} = (1.0)(.425) + 1.75\,(5.21)$$
$$= 9.543\ K\text{-}ft$$
$$= 114.50\ K\text{-}in.$$

$$\phi M_n = \phi\left[A_s f_y \left(d_s - \frac{1}{2}\frac{A_s f_y}{0.85 f'_c b}\right)\right] \geq M_{str.\,I}$$

$\phi = 0.9$

$f_s = f_y = 60$ KSI

$f'_c = 5$ KSI

$d_s = 7'' - 1.0$ cover $- 0.5 \times 0.625$ in bar

$= 5.687''$

BRF 010-1-(43)

BELL ENGINEERING
CIVIL & ENVIRONMENTAL
17 ECHO COVE WAY
SPOFFORD, NEW HAMPSHIRE 03462
(603) 363-9966

PROJECT NAME/ LOCATION: ~~BRF 014-2-(35)~~
SHEET #: 3 OF 9
CALCULATED BY: Ron Bell DATE: 2-20-14
CHECKED BY: DATE:
SCALE:

SOLVE FOR As for Positive Reinforcement

BY TRIAL AND ERROR: TRY #5 bar @ 9" o.c.

$(12/9)(3.14)(\frac{.625}{2})^2 = 0.409 \text{ in}^2$

$0.9\left[(0.409 \times 60)\left(5.687 - \frac{1}{2}\frac{0.409 \times 60}{0.85 \times 5 \times 12}\right)\right]$

$= 120.289 \text{ K-in} > 114.50 \text{ K-in}$ OK

BUT TRY #5 Bars @ 10" o.c.

$A = (12/10)(3.14)(\frac{.625}{2})^2 = 0.368$

$0.9\left[((0.368)(60))\left(5.687 - \frac{1}{2}\frac{0.368 \times 60}{(0.85)(5)(12)}\right)\right]$

$= 120.789 > 114.50$ OK

TRY 12" o.c. As = 0.307

$0.9\left[((0.307)(60))\left(5.687 - \frac{1}{2}\frac{0.307 \times 60}{(0.85)(5)(12)}\right)\right]$

$= 101.4 <<< 114.50$ NG

$\boxed{\text{PICK \#5 bars @ 10" o.c.}}$

BRF 010-1 (43)

BELL ENGINEERING
CIVIL & ENVIRONMENTAL
17 ECHO COVE WAY
SPOFFORD, NEW HAMPSHIRE 03462
(603) 363-9966

PROJECT NAME/ LOCATION: ~~1442 (35)~~
SHEET #: 4 OF 9
CALCULATED BY: Ron Bell DATE: 2-24-17
CHECKED BY: DATE:
SCALE:

CHECK CRACK CONTROL

$$s \le \frac{700\gamma_e}{\beta_s f_s} - 2d_c$$

s = spacing of reinforcement closest to tension face

where: $\beta_s = 1 + \frac{d_c}{0.7(h-d_c)}$

where $d_c = 1.0''$ clear $+ 0.5 \times 0.625$ in bar
$= 1.3125$ in.

$h = 7''$

$\therefore \beta_s = 1 + \frac{1.3125}{(0.7)(7-1.3125)} = 1.330$

$(7 - 1.3125) \Downarrow 5.688$

$\gamma_e = 0.75$

$f_s = \frac{M_{service}}{A_s j d_s}$

$f_s =$

$K = \sqrt{((.005)(7))^2 + (2)(.005)(7)} - (.005)(7)$

$= 0.036$

$j = 1 - \frac{K}{3} = 1 - \frac{0.036}{3}$
$= 0.988$

Where;

$A_s = 0.368 \text{ in}^2$

$j = 1 - \frac{k}{3}$

$K = \sqrt{(\rho n)^2 + 2\rho n} - \rho n$

$\rho = \frac{A_s}{b d_s} = \frac{0.368 \text{ in}^2}{(12'')(5.687)''}$

$= 0.005$

$n = \frac{E_s}{E_c} = 7$ for

$4.6 \le f'_c \le 6.0$ C.C.10.1.1b

BELL ENGINEERING
CIVIL & ENVIRONMENTAL
17 ECHO COVE WAY
SPOFFORD, NEW HAMPSHIRE 03462
(603) 363-9966

PROJECT NAME/ LOCATION: BRF 010-1(43) ~~1442(38)~~
SHEET #: 5 OF 9
CALCULATED BY: Ron Bell DATE: 2-20-14
CHECKED BY: DATE:
SCALE:

$\gamma_{ie} = 0.75$ for decks exposed to water

$M_{SERVICE\ I} = 1.0\,(DC + LL + IM)$

$= 0.425 + 5.21$

$= 5.635$ K-FT

$= 67.620$ K-IN

$$f_s = \frac{67.620 \text{ K-IN}}{(0.368 \text{ in}^2)(0.988)(5.687)''} = 32.203 \text{ KSI}$$

$$S \leq \frac{(700)(0.75)}{(1.330)(32.203} \text{ in} - (2)(1.3125) \text{ in} =$$

$$\leq 12.043 - 2.625 = 9.418$$

10" $\geq$ 9.418 in N.G.

$\therefore$ MODIFY SPACING TO PROVIDE

$\boxed{\text{\#5 bars @ 9" O.C.}}$

STATE OF VERMONT
RONALD K. BELL
No. 6034
REGISTERED PROFESSIONAL ENGINEER

BRF 010-1 (43)

BELL ENGINEERING
CIVIL & ENVIRONMENTAL
17 ECHO COVE WAY
SPOFFORD, NEW HAMPSHIRE 03462
(603) 363-9966

PROJECT NAME/ LOCATION: ~~L442 (35)~~

SHEET #: 6 OF 9

CALCULATED BY: Ron Bell DATE: 2-20-14

CHECKED BY: DATE:

SCALE:

STATE OF VERMONT RONALD K. BELL No. 6934 REGISTERED PROFESSIONAL ENGINEER

CHECK MIN. REINFORCEMENT

$M_r > M_{CR}$

$M_{CR} = \gamma_3 \gamma_1 S f_r$ (K-in)

$S = \frac{1}{6} bh^2 = \frac{1}{6}(12")(7)^2 = 98 \text{ in}^3$

$f_r = 0.25\sqrt{f'_c} = 0.24\sqrt{5.0 \text{ ksi}} = 0.537 \text{ ksi}$

$\gamma_3 = 0.75$ for grade 60.

$\gamma_1 = 1.6$ for non segmental

$M_{CR} = (0.75)(1.6)(98)(0.537) = 63.151$ K-in

$M_r = \phi M_N = 120.289$ (see pg. 3 for trial with #5 @ 9" o.c.)

$120.289 > 63.151$ ∴ OK

BELL ENGINEERING
CIVIL & ENVIRONMENTAL
17 ECHO COVE WAY
SPOFFORD, NEW HAMPSHIRE 03462
(603) 363-9966

PROJECT NAME/ LOCATION: BRF 010-1(43) ~~LITTLE (35)~~
SHEET #: 7 OF 9
CALCULATED BY: Ron Bele DATE: 2-20-17
CHECKED BY: DATE:
SCALE:

Negative Reinforcement

From "Positive calculations $w_{DC} = 0.088$ k/ft

Span length: Reduce by 1/2 flange width = 6.5'

$M_{DC} = \left(\frac{1}{10}\right)(0.088\ k/ft)(6.5)^2 = 0.372$ k-ft

LL+IM MOMENTS FROM A-4 (Note 4.6.2.1.6

for negative moments taken as 1/4 flange width from c/L of support; $\frac{16.5'}{4} = 4.38''$ use 3" from table

$\therefore M_{LL+IM} = 5.17$ K-FT

Factored moment $= \eta_i[1.0(M_D + 1.75 M_{LL+IM})$ = 9.420 K-ft = 113.034 K-in

Design for Moment Capacity

$$\phi M_n = \phi\left[A_s f_y \left(d_s - \frac{1}{2}\frac{A_s f_y}{0.85 f'_c b}\right)\right] \geq M_{strength\,I}(113.034)$$

$\phi = 0.9$

$f_y = 60$ KSI

$f'_c = 5$ KSI

To account for broom finish

$d_s = 7''$ slab $-$ (2" + 0.25" cover) $- 0.5 \times 0.625$ bar $= 5.063''$

$b = 12$ in

BRF 010-1 (43)

BELL ENGINEERING
CIVIL & ENVIRONMENTAL
17 ECHO COVE WAY
SPOFFORD, NEW HAMPSHIRE 03462
(603) 363-9966

PROJECT NAME/ LOCATION: ~~1442 (35)~~
SHEET #: 8 OF 9
CALCULATED BY: Rm Bell DATE: 2-20-14
CHECKED BY: DATE:
SCALE:

STATE OF VERMONT
RONALD R. BELL
No. 6094
REGISTERED PROFESSIONAL ENGINEER

TRY, #5 bars @ #5 bars @ 9" O.C. $A_s = 0.409 \text{ in}^2$

$$0.9\left[(0.409 \times 60)\left(5.063 - \left(\tfrac{1}{2}\right)\left(\frac{0.409 \times 60}{(0.85)(5)12}\right)\right)\right]$$

$= 118.342$ K-in > ~~[illegible]~~ 113.034 K-in OK

Check Cracking for Negative Moment

$$s \le \frac{700\gamma_e}{\beta_s f_s} - 2d_c$$

where

$$\beta_s = \frac{1 + d_c}{0.7(h - d_c)}$$

$$\rho = \frac{A_s}{b d_s} = \frac{0.409 \text{ in}^2}{(12 \text{ in})(5.063)}$$

$= 0.007$

where $d_c =$ $(2.0 + 0.25)$ in clear $+ 0.5 \times 0.625$

$= 2.563$ in

$n = 7''$

$n = 7$ from C 6.10.1.1b for $4.6 \le f'_c \le 6.0$

$$\therefore \beta_s = 1 + \frac{2.563}{0.7(7 - 2.563)}$$

$= 1.825$

$$K = \sqrt{[(.007)(7.0)]^2 + (2)(.007)(7.0) - (.007)(7)}$$

$= 0.226$

$\gamma_e = 0.75$

$f_s = \dfrac{M_{service\ I}}{A_s\, j\, d_s}$

$M_{service\ I} = 1(1.0 M_{DC} + 1.0 M_{LL+IN})$

$= 5.542$ K-ft

$= 66.504$ K-IN

$A_s = 0.409$

$j = 1 - \frac{K}{3}$

$K = \sqrt{(\rho n)^2 + 2\rho n} - \rho n$

$J = 1 - \frac{0.226}{3} = 0.925$

BELL ENGINEERING
CIVIL & ENVIRONMENTAL
17 ECHO COVE WAY
SPOFFORD, NEW HAMPSHIRE 03462
(603) 363-9966

PROJECT NAME/ LOCATION: BRF 010-1(43) ~~BRO 1442 135~~
SHEET #: 9 OF 9
CALCULATED BY: Ron Bell DATE: 2-20-14
CHECKED BY: DATE:
SCALE:

STATE OF VERMONT RONALD K. BELL No. 6994 REGISTERED PROFESSIONAL ENGINEER

$$f_s = \frac{M_{service\ I}}{A_s\, j\, d_s} = \frac{66.504\ \text{K-in}}{(.409\ \text{in}^2)(0.925)(5.063)}$$

$$s \le \frac{700\, \gamma_e}{\beta_s f_s} - 2d_c \qquad = 34{,}720\ \text{KSI}$$

$$s \le \frac{(700)(0.75)}{(1.825)(34.720)} - (2)(2.563) = 3.158\ \text{in}$$

$9'' > 3.158''$ N.G

TRY #5 bars @ 6" ¢ to ¢ spacing. $A_s = 0.62\ \text{in}^2$

$$\rho = \frac{0.62}{(12)(5.063)} = 0.010$$

$$K = \sqrt{[(.01)(7.0)]^2 + (2)(.01)(7) - (.01)(7)} = 0.274$$

$$j = 1 - \frac{K}{3} = 0.909$$

$$f_s = \frac{M_{service}}{A_s\, j\, d_s} = \frac{66.504}{(0.62)(0.909)(5.063)} = 23.307\ \text{KSI}$$

$$s \le \frac{(700)(0.75)}{(1.825)(23.307)} - (2)(2.563) = 7.217$$

$6'' < 7.217$ OK

Distribution Reinforcement = 0.67% of Primary as per 9.7.3.2 for bottom Bars

∴ #5 bars @ 12" O.C.

NOTE: TOP Longitudinal steel only needs to meet temp. + shrinkage ∴ #5 @12" O.C adequate

BEAM CALCULATIONS:

BELL ENGINEERING
CIVIL & ENVIRONMENTAL
17 ECHO COVE WAY
SPOFFORD, NEW HAMPSHIRE 03462
(603) 363-9966

PROJECT NAME/ LOCATION: 010-(1)(43)
SHEET #: 1 OF 5
CALCULATED BY: Ron Bell DATE: 2-6-2014
CHECKED BY: DATE:
SCALE:

TEMPORARY BRIDGE CALCULATIONS
STEEL BEAMS

BEAMS @ 36x260 WITH 1x14 PLATE ON BOTT FLANGE
SEE SECTION CALCULATION
$A = 90.50 \text{ in}^2$
$S_x = 1317.61 \text{ in}^3$
$Z_x = 1515.0 \text{ in}^3$

DESIGN = HL 93 SPAN FROM ℄ + ℄ BEARING = 76'

DESIGN TRUCK MOMENT > DESIGN TANDEM

DESIGN TRUCK =

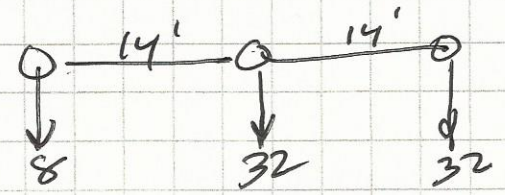

FROM BALANCE POINT OF DESIGN TRUCK
LOADS ACT 19.33' (FRONT), 33.77' + 47.33'

LOAD DISTRIBUTION

UNIFORM LANE LOAD = $S/10 = \frac{7.0}{10} = 0.70 \times 0.64 = 0.448$ K/ft

WHEEL LOADS:

FOR EXTERIOR BEAMS (WORST CASE)

TABLE 4.6.2.2.2d-1 USE LEVER RULE

STATE OF VERMONT
RONALD K. BELL
NO 8884
PROFESSIONAL ENGINEER

BELL ENGINEERING
CIVIL & ENVIRONMENTAL
17 ECHO COVE WAY
SPOFFORD, NEW HAMPSHIRE 03462
(603) 363-9966

PROJECT NAME/ LOCATION: RRF 010-1 (43)
SHEET #: 2 OF 5
CALCULATED BY: Ron Bell DATE: 2-6-2014
CHECKED BY: DATE:
SCALE:

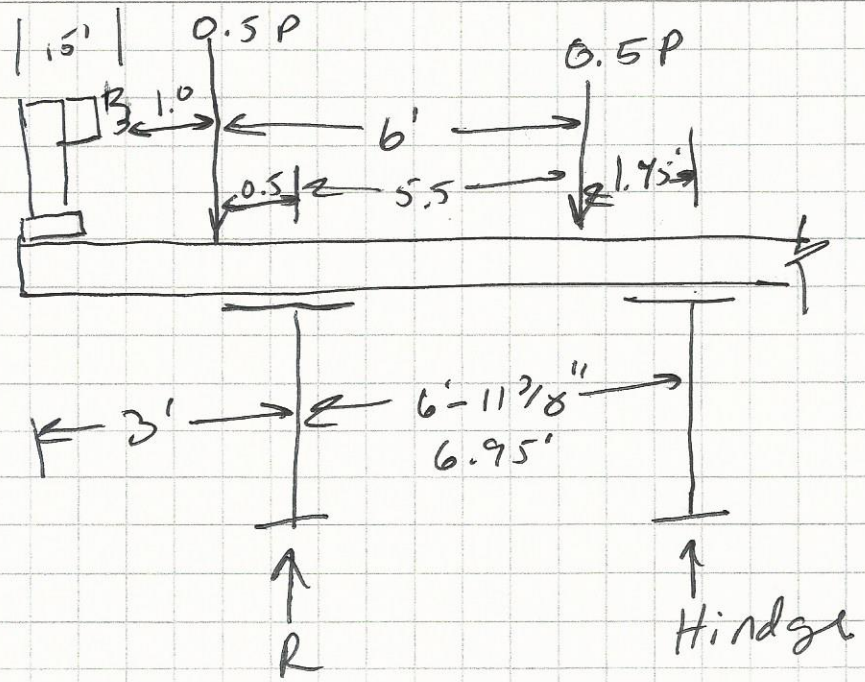

$M_{Hindge} = -(1.45)(0.5P) - (7.45' \times 0.5P) + 6.95(R) = 0$

$R = 0.64P$

Dynamic Load Allowance = 33%
V Trans Load Modifier for temp bridge = 0.9
Multiple Lane Factor for one ~~des~~ Lane design = 1.2
} 1.436

FRONT WHEEL LOAD = (0.64) (8/2 KIPS) (1.436) = 3.676 KIPS
REAR WHEEL LOAD = (0.64) (32/2) (1.436) = 14.705 KIPS

DL ON EXTERIOR BEAM = $(7/2)(150)\left[\left(\frac{6.95}{2}\right) + (3)\right] + 50\,\#/ft$

$= 616.56\,\#/ft = 0.616\,K/ft$

WORST CASE WHEEL LOADS

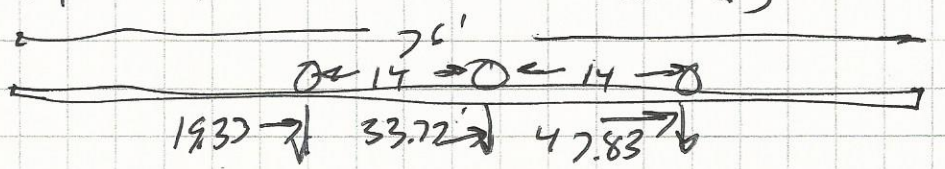

BASED ON BALANCE POINT OF DESIGN TRUCK

BELL ENGINEERING
CIVIL & ENVIRONMENTAL
17 ECHO COVE WAY
SPOFFORD, NEW HAMPSHIRE 03462
(603) 363-9966

PROJECT NAME/ LOCATION: BRF 010-1 (43)
SHEET #: 3 OF 5
CALCULATED BY: Ron Bell DATE: 2-6-2014
CHECKED BY: DATE:
SCALE:

FOR STRENGTH I DESIGN FACTORS ARE:
DC 1.0
LL+IM = 1.75

BELL ENGINEERING
CIVIL & ENVIRONMENTAL
17 ECHO COVE WAY-SPOFFORD, NH 03462
(603) 363-9966

Project Title:
Engineer:
Project Descr:
Project ID:

Printed: 25 FEB 2014, 10:36AM

General Beam Analysis

File = c:\Users\Ron\DOCUME~1\ENERCA~1\RT9CON~1.EC6
ENERCALC, INC. 1983-2013, Build:6.13.8.31, Ver:6.13.12.31

Lic. # : KW-06009396 Licensee : Bell Engineering

Description : --None--

General Beam Properties

Elastic Modulus 29,000.0 ksi

Span #1 Span Length = 76.0 ft Area = 90.50 in^2 Moment of Inertia = 21,408.6 in^4

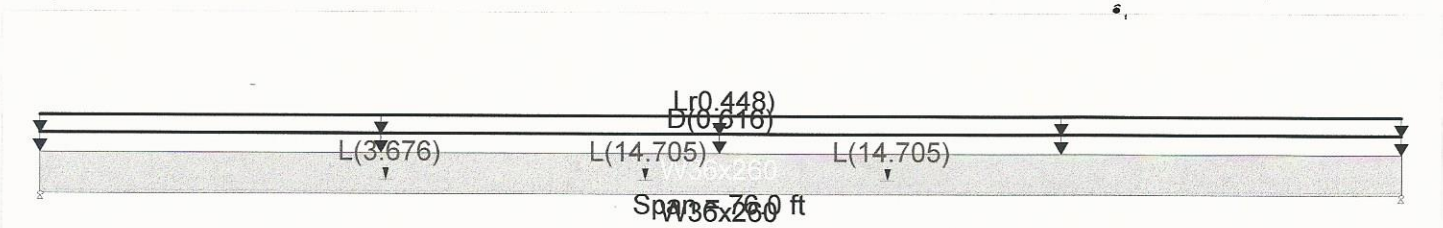

Applied Loads

Service loads entered. Load Factors will be applied for calculations.

Beam self weight calculated and added to loads
Load(s) for Span Number 1
Point Load : L = 3.676 k @ 19.330 ft ← FRONT
Point Load : L = 14.705 k @ 33.770 ft REAR
Uniform Load : D = 0.6160 k/ft, Tributary Width = 1.0 ft DEAD
Point Load : L = 14.705 k @ 47.330 ft REAR
Uniform Load : Lr = 0.4480 k/ft, Tributary Width = 1.0 ft ← UNIFORM LANE LOAD

DESIGN SUMMARY

Maximum Bending =	1,880.412 k-ft	Maximum Shear =	82.297 k
Load Combination	+D+1.750Lr+1.750L	Load Combination	+D+1.750Lr+1.750L
Location of maximum on span	35.720ft	Location of maximum on span	76.000 ft
Span # where maximum occurs	Span # 1	Span # where maximum occurs	Span # 1

STATE OF VERMONT
RONALD K. BELL
NO. 6994
PROFESSIONAL ENGINEER

BELL ENGINEERING
CIVIL & ENVIRONMENTAL
17 ECHO COVE WAY
SPOFFORD, NEW HAMPSHIRE 03462
(603) 363-9966

PROJECT NAME/ LOCATION: BRF 010-(1) (43)
SHEET #: 4 OF 5
CALCULATED BY: Ron Bell DATE: 2-6-2014
CHECKED BY: DATE:
SCALE:

FROM ENERCAL $M_F = 1880.41$ K-FT

$$M_u = F_y Z_z = \frac{36 \frac{Kips}{in^2} \times 1515.0 \ in^3}{12 \ in/ft}$$

$$= 4545 \ K\text{-}FT$$

STATE OF VERMONT
RONALD K BELL
NO 6994
PROFESSIONAL ENGINEER

$M_u >>> M_F \therefore OK$

CHECK DEFLECTION

NOTE: PER AASHTO THE UNIFORM LANE LOAD IS NOT INCLUDED IN DEFLECTION CALCS.

General Beam Properties

Elastic Modulus 29,000.0 ksi
Span #1 Span Length = 76.0 ft Area = 90.50 in^2 Moment of Inertia = 21,408.6 in^4

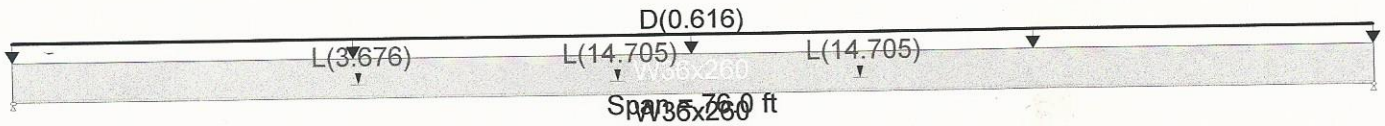

Applied Loads Service loads entered. Load Factors will be applied for calculations.

Beam self weight calculated and added to loads
Load(s) for Span Number 1
Point Load : L = 3.676 k @ 19.330 ft
Point Load : L = 14.705 k @ 33.770 ft
Uniform Load : D = 0.6160 k/ft, Tributary Width = 1.0 ft
Point Load : L = 14.705 k @ 47.330 ft

DESIGN SUMMARY

Maximum Bending =	1,319.011 k-ft	Maximum Shear =	52.505 k
Load Combination	+D+1.750Lr+1.750L	Load Combination	+D+1.750Lr+1.750L
Location of maximum on span	33.820ft	Location of maximum on span	76.000 ft
Span # where maximum occurs	Span # 1	Span # where maximum occurs	Span # 1

Maximum Deflection

Max Downward L+Lr+S Deflection	0.782 in
Max Upward L+Lr+S Deflection	0.000 in
Max Downward Total Deflection	1.533 in
Max Upward Total Deflection	0.000 in

$76 \times 12 = 912$

$\frac{912}{0.782} = 1166$ OK

777800

BELL ENGINEERING
CIVIL & ENVIRONMENTAL
17 ECHO COVE WAY-SPOFFORD, NH 03462
(603) 363-9966

Project Title: ~~1442126~~ BRF 010-(1)(43)
Engineer: Ron Bell
Project Descr:
Project ID:
5/5

Printed: 25 FEB 2014, 9:15AM

General Section Property Calculator

File = c:\Users\Ron\DOCUME~1\ENERCA~1\RT9SEC~1.EC6
ENERCALC, INC. 1983-2013, Build:6.13.8.31, Ver:6.13.12.31

Lic. # : KW-06009396 Licensee : Bell Engineering

Description : 36X260 WITH 1X14 PLATE ON BOT FLANGE

Final Section Properties

Total Area	:	90.50 in^2
Calculated final C.G. distance from Datum :		
X cg Dist.	:	0.0 in
Y cg Dist.	:	-2.882 in
Edge Distances from CG. :		
+X	:	8.275 in
-X	:	-8.275 in
+Y	:	21.012 in
-Y	:	-16.248 in
Ixx =	:	21,408.6 in^4
Iyy =	:	1,318.67 in^4
Sxx : - Y	:	1,317.61 in^3
Sxx : +Y	:	1,018.87 in^3
Syy : - X	:	159.355 in^3
Syy : +X	:	159.355 in^3
r xx	:	15.380 in
r yy	:	3.817 in

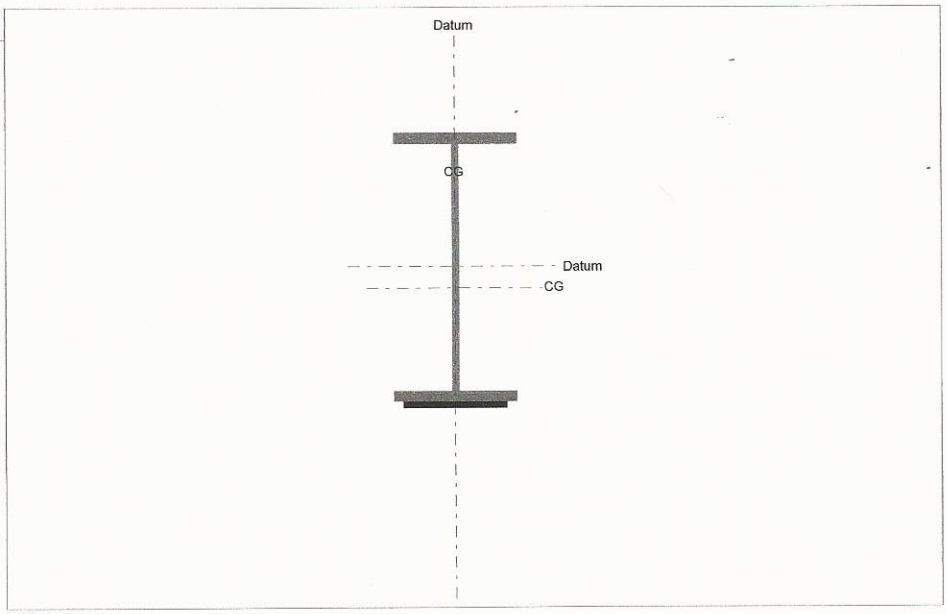

General Shapes

Rect : 1			Height =	1.000 in	Width =	14.000 in	Rotation =	0 dec CCW	
Area =	14.000 in^2	Xcg =	0.000 in	Ixx =	1.167 in^4	Sxx =	2.333 in^3	Rxx =	0.289 in
		Ycg =	-18.630 in	Iyy =	228.667 in^4	Syy =	32.667 in^3	Ryy =	4.041 in

Steel Shapes

W36x260 : 1			Ixx =	17,300.000 in^4	Rotation =	0 dec CCW
	Area =	76.500 in^2	Iyy =	1,090.000 in^4	Xcg =	0.000 in
	Height	36.260 in	Sxx =	954.220 in^3	Ycg =	0.000 in
	Width	16.550 in	Syy =	131.722 in^3		

$Z_x = 1,515.0 \text{ in}^3$

STATE OF VERMONT
RONALD K BELL
NO 6994
PROFESSIONAL ENGINEER

SUBSTRUCTURE

BELL ENGINEERING
CIVIL & ENVIRONMENTAL
17 ECHO COVE WAY
SPOFFORD, NEW HAMPSHIRE 03462
(603) 363-9966

PROJECT NAME/ LOCATION: 010-1 (43)
SHEET #: 1 OF 4
CALCULATED BY: Ron Bell DATE: 6-2014
CHECKED BY: DATE:
SCALE:

2 TRUCK = 144 KIPS x 1.75 x 1.33 = 335 KIPS
DECK = 27' x (7/12) (76') x (150 #/ft³) = 179 KIPS
BEAMS + GR = 90 KIPS

604 KIPS

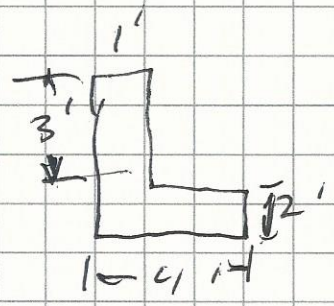

(2x4) + (3x1) (150) (26.83') = 44 KIPS

$\frac{604}{2 \text{ side}}$ + 44 KIPS = 346 KIPS
x 1.5
519 KIPS

$\frac{519 \text{ KIPS}}{(4' \times 26.83')} = 4.83 \text{ KIPS/ft}^2$

FROM REVIEW OF NORTH SIDE BORING
N WORST = 4 @ 5' below grade.

~~FOR COHERES~~ FOR GRANULAR SOILS

$q_u = \gamma \left[D x_1 + B x_2 \right]$ PSF γ in (pcf)
D in (ft)
B in (in)

FROM CHART Q calculated to be ~~[illegible]~~ 15,500 psf

~~[illegible]~~ 15,500 777 4,630 OK

STATE OF VERMONT
RONALD K BELL
NO 6994
PROFESSIONAL ENGINEER

2/4

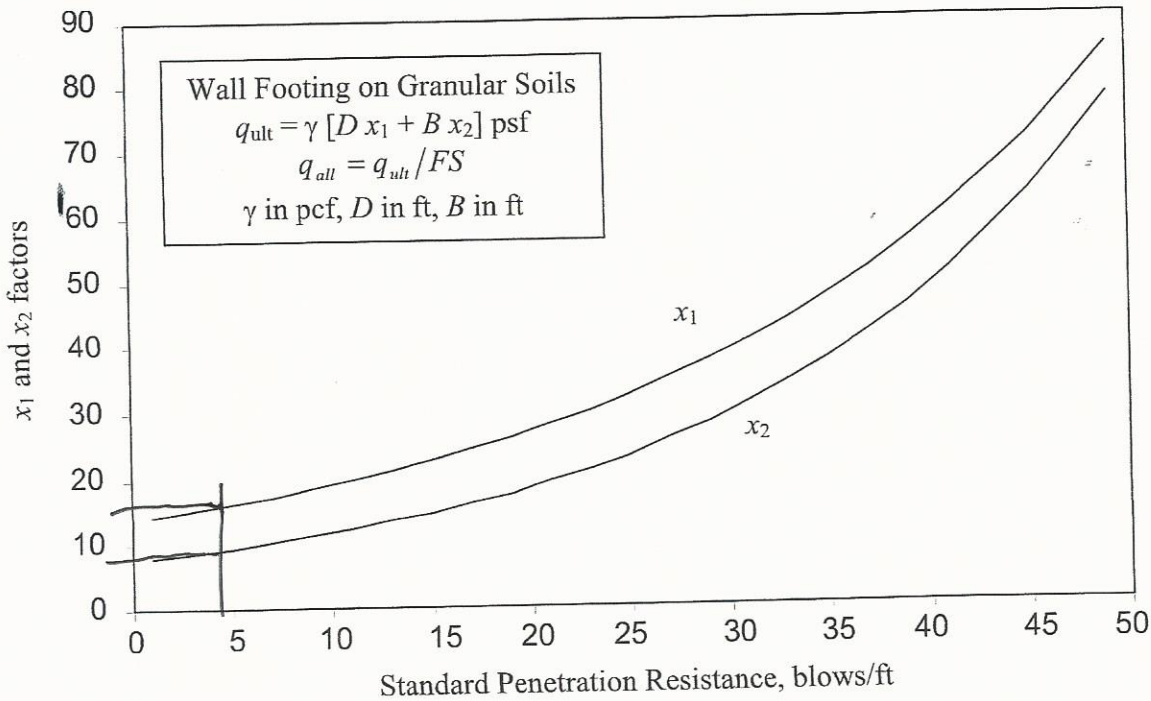

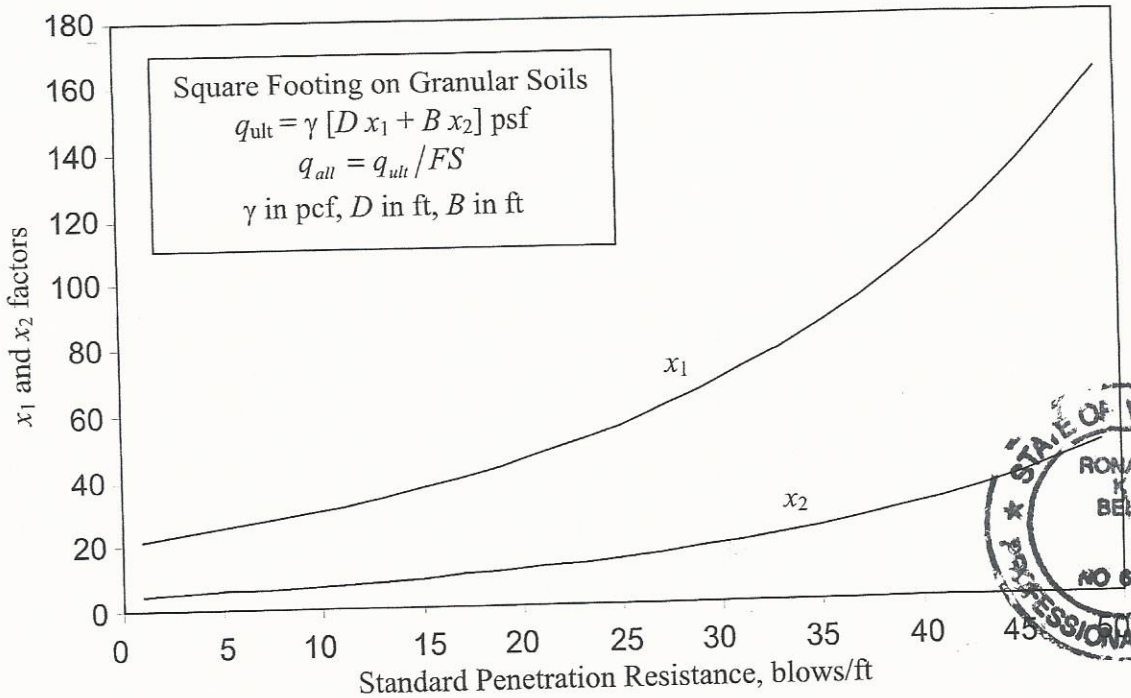

STATE OF VERMONT
RONALD K. BEE
NO 6894
PROFESSIONAL ENGINEER

Note: Settlement was not considered in the graphs.

Bearing Capacity for a Footing on Granular Soils

$q = (120)\,[(4)(60)(15) + (48)(7)]$ 336

47,520 psf / 3 FS =

15,840 psf

BELL ENGINEERING
CIVIL & ENVIRONMENTAL
17 ECHO COVE WAY
SPOFFORD, NEW HAMPSHIRE 03462
(603) 363-9966

PROJECT NAME/ LOCATION: 010-1 (43)
SHEET #: 3 OF 4
CALCULATED BY: Ron Bell DATE: 6-20-14
CHECKED BY: DATE:
SCALE:

CHECK REINFORCEMENT

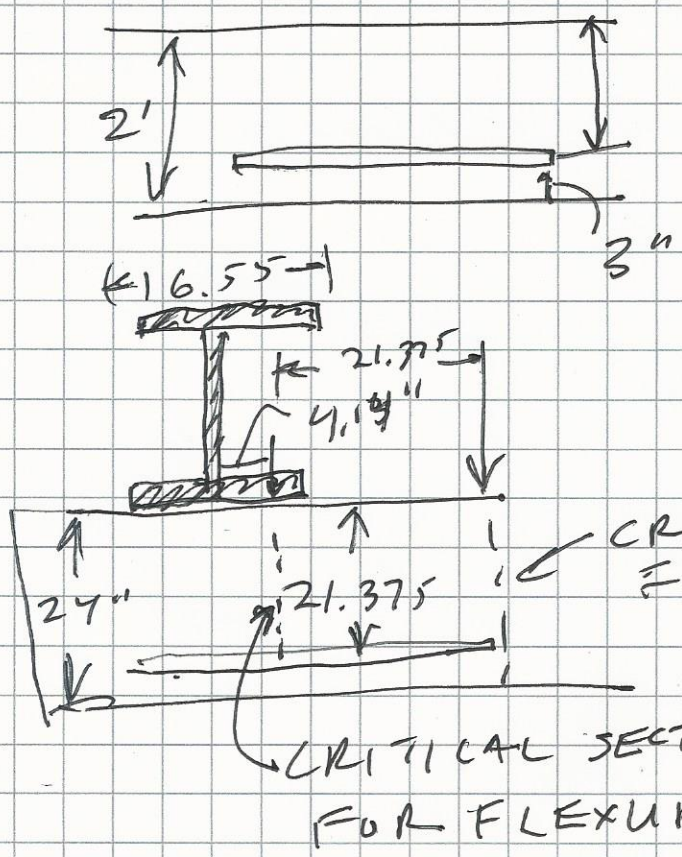

$D_s = 24 - 3 + 6/8/2$
$= 21.375''$

(beam spacing)
$L = 7'$
$C = 16.55/12$

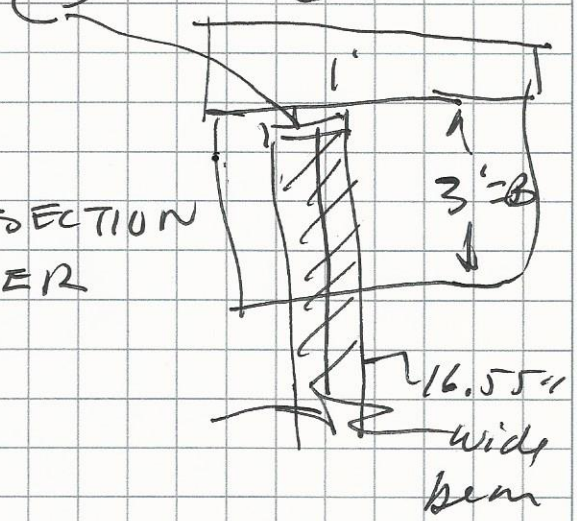

$$M_{u\,(Approx)} = \frac{q_u B \left(\frac{L}{2} - \frac{C}{2}\right)^2}{2}$$

$$= (4.83)(3)\left(\frac{7}{2} - \frac{1.38}{2}\right)^2$$

$$= 144.4 \text{ KIP-ft}$$

STATE OF VERMONT
RONALD K BELL
NO 6904
PROFESSIONAL ENGINEER

Flexural Reinforcement

BELL ENGINEERING
CIVIL & ENVIRONMENTAL
17 ECHO COVE WAY
SPOFFORD, NEW HAMPSHIRE 03462
(603) 363-9966

PROJECT NAME/ LOCATION: OD-1 (43)
SHEET #: 4 OF 4
CALCULATED BY: Ron Bell DATE: 6-20-14
CHECKED BY: DATE:
SCALE:

$$\rho = \frac{0.85 f'_c \left(1 - \sqrt{1 - \frac{Mu}{0.383\, bd^2 f'_c}}\right)}{fy}$$

$$= \frac{(0.85)(4)\left(1 - \sqrt{1 - \frac{144 \times 12 \times 1000}{(0.383)(36)(21.375)^2(4000)}}\right)}{60}$$

$$= \underline{0.004}$$

#6 bars longitudinal @ 5" O.C.

$$\rho = \frac{\pi \left[\left(6/8\right)/2\right]^2 \left(12/5\right)}{12 \times 21.375} = \frac{1.06}{256.5} = .004$$

.004 = .004 OK

STATE OF VERMONT
RONALD K BELL
NO 6694
PROFESSIONAL ENGINEER