Since pole is being moved out, was moving the PI to here considered to provide additional room for phase 1 abutment #2/approach slab #2 construction? (comment on last submittal)

There is not going to much room to work in this area with the current configuration shown.

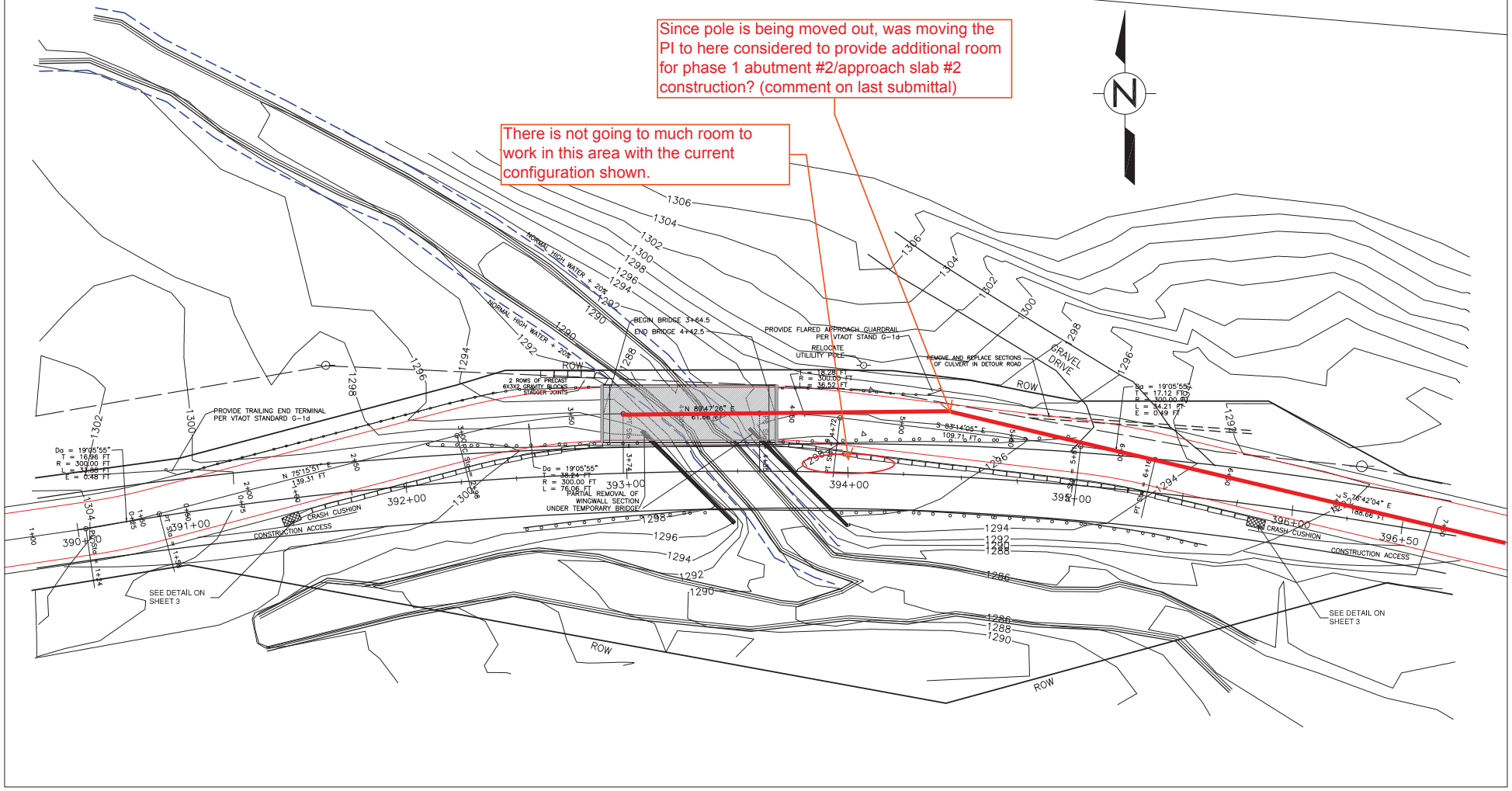

Vermont Agency of Transportation

RECEIVED

CK'D BY RK OK'D BY

March 18, 2014

RESUBMIT YES Rejected

BY KH DATE 3-20-2014

20 0 20 40 60

Scale: 1" = 20'

PLAN OF TEMPORARY BRIDGE, ABUTMENTS & BYPASS ROAD

BRF 010-1(43)

ROUTE 9

MARLBORO, VT

DATE: FEB 20, 2014 SHEET: 1

AMENDED: 3-14-2014

BELL ENGINEERING

CIVIL & ENVIRONMENTAL

17 ECHO COVE WAY-SPOFFORD, NH 03462

(603) 363-9966

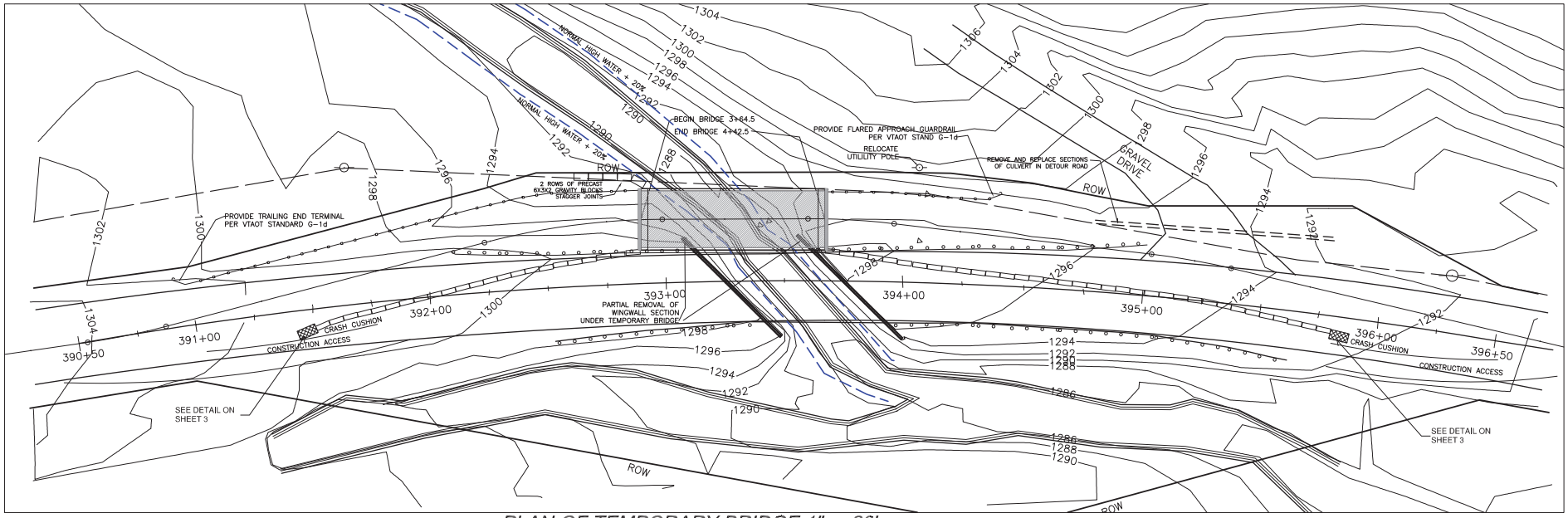

PLAN OF TEMPORARY BRIDGE 1" = 20'

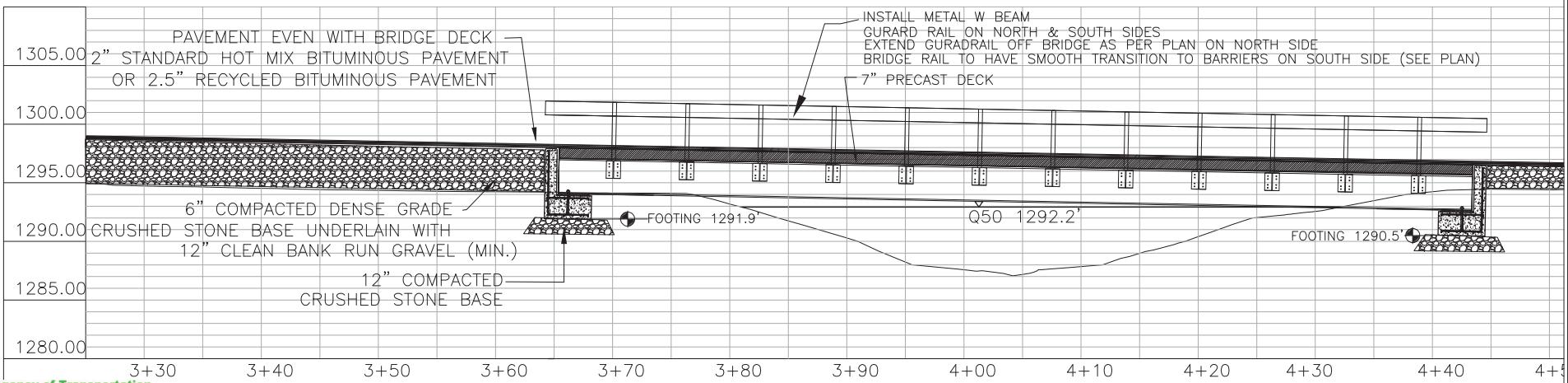

PROFILE OF TEMPORARY BRIDGE 1" = 4'

Vermont Agency of Transportation
RECEIVED
CK'D BY RK OK'D BY
March 18, 2014
RESUBMIT YES Rejected
BY KH DATE 3-20-2014

PLAN AND PROFILE OF TEMPORARY BRIDGE, ABUTMENTS & BYPASS ROAD

RENAUD BROS. INC.
BRF 010-1(43)
ROUTE 9
MARLBORO, VT

DATE 2-20-2014
AMENDED 3-14-2014

BELL ENGINEERING
CIVIL & ENVIRONMENTAL
17 ECHO COVE WAY SPOFFORD, NH 03462
(603) 363-9966

SHEET
2

Vermont Agency of Transportation
RECEIVED
CK'D BY RK OK'D BY
March 18, 2014
RESUBMIT YES Rejected
BY KH DATE 3-20-2014

MATERIALS FOR FOOTING AND STEM WALL:
CONCRETE FOR FOOTING AND STEM WALL
TO BE HP CLASS B WITH 3,500 PSI 28-DAY COMPRSSIVE STRENGTH
REINFORCING STEEL TO HAVE Fb= 60 KSI

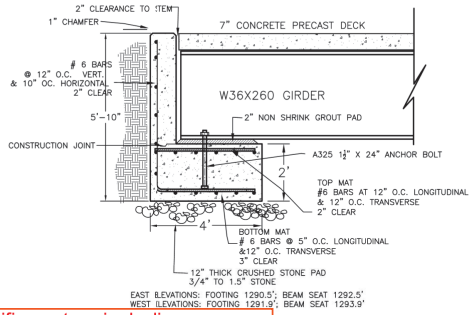

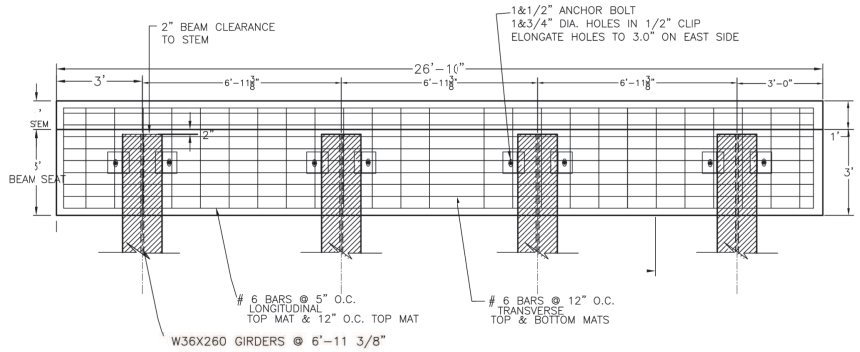

ABUTMENT DETAILS 1" = 2'

Provide details on specific system including manufacturer and product name, dimensions between barrels and dimensions from concrete barrier so it can be properly installed.

DESIGN VELOCITY 35 mph
7 barrels/array

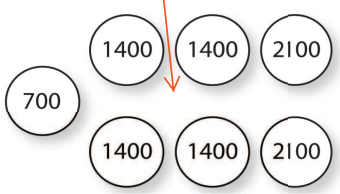

GUARDRAIL DEFLECTION CHART
(PER AASHTO - ROADSIDE DESIGN GUIDE - LATEST EDITION)

TYPE		GR POST SPACING	DEFLECTION
THREE CABLE	W/STEEL POSTS	16' - 0"	11' - 6"
	W/WOODEN POSTS	12' - 6"	11' - 6"
W-BEAM	W/STRONG POST	6' - 3"	3'
BOX BEAM		6' - 0"	5'
THRIE BEAM	W/STRONG POST	6' - 3"	2'

THIS CHART LISTS THE THEORETICAL MAXIMUM DEFLECTION DISTANCE, UPON IMPACT, OF DIFFERENT TYPES OF GUARDRAIL AND VARIOUS POST SPACINGS.

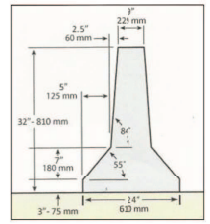

F-SHAPE BARRIER DIMENSIONS

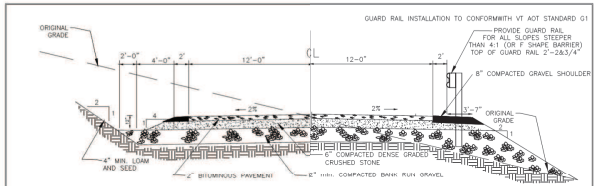

TYPICAL DETOUR ROAD SECTION
(NOT TO SCALE)

STATE OF VERMONT GERALD N. BOSS No. 6594 PROFESSIONAL ENGINEER REGISTERED

DETAILS: TEMPORARY BRIDGE

BRF 010-1(43)
ROUTE 9
MARLBORO, VT

DATE: 2-20-2014	
AMENDED: 3-14-2014	

BELL ENGINEERING
CIVIL & ENVIRONMENTAL
17 ECHO COVE WAY-SPOFFORD, NH 03462
(603) 363-9966

SHEET 3

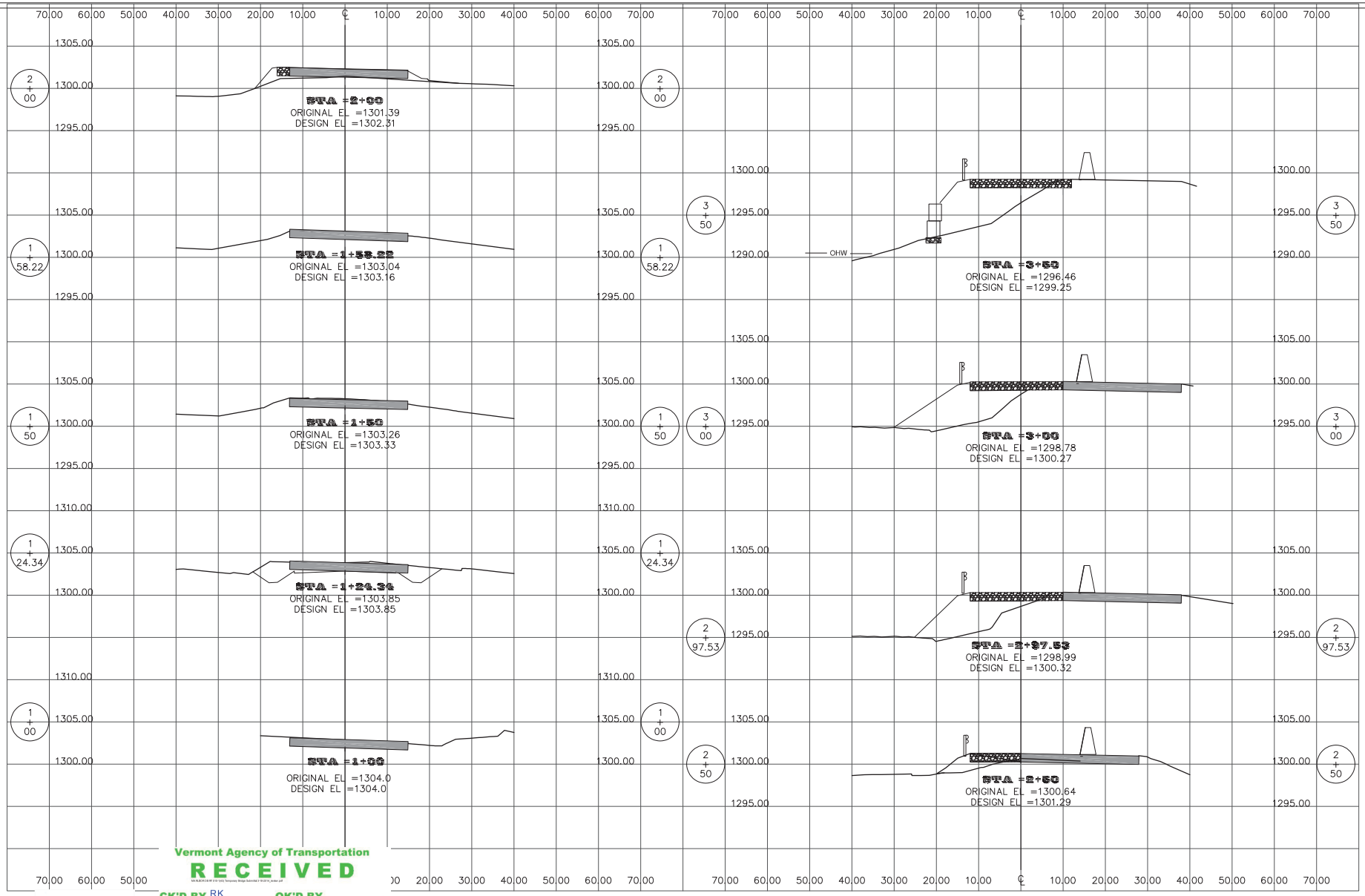

Vermont Agency of Transportation
RECEIVED
CK'D BY RK OK'D BY
March 18, 2014
RESUBMIT YES Rejected
BY KH DATE 3-20-2014

CROSS SECTIONS

RENAUD BROS. INC.
BRF 010-1(43)
ROUTE 9
MARLBORO, VT

DATE 3-20-2014

BELL ENGINEERING
CIVIL & ENVIRONMENTAL
17 ECHO COVE WAY SPOFFORD, NH 03462
(603) 363-9966

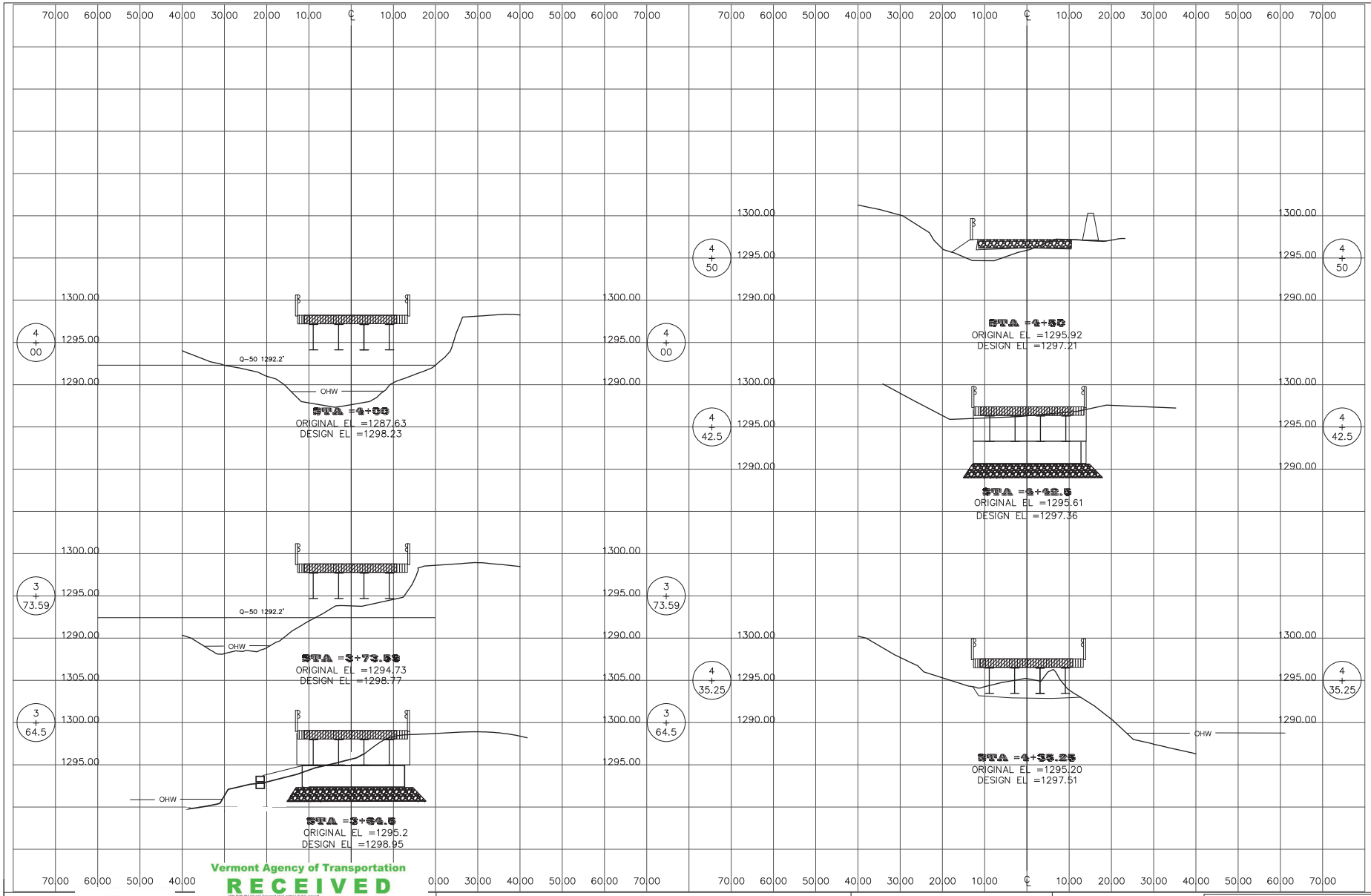

Vermont Agency of Transportation
RECEIVED
CK'D BY RK OK'D BY
March 18, 2014
RESUBMIT YES Rejected
BY KH DATE 3-20-2014

CROSS SECTIONS

RENAUD BROS. INC.
BRF 010-1(43)
ROUTE 9
MARLBORO, VT

DATE 2-03-2014

BELL ENGINEERING
CIVIL & ENVIRONMENTAL
17 ECHO COVE WAY SPOFFORD, NH 03462
(603) 363-9966

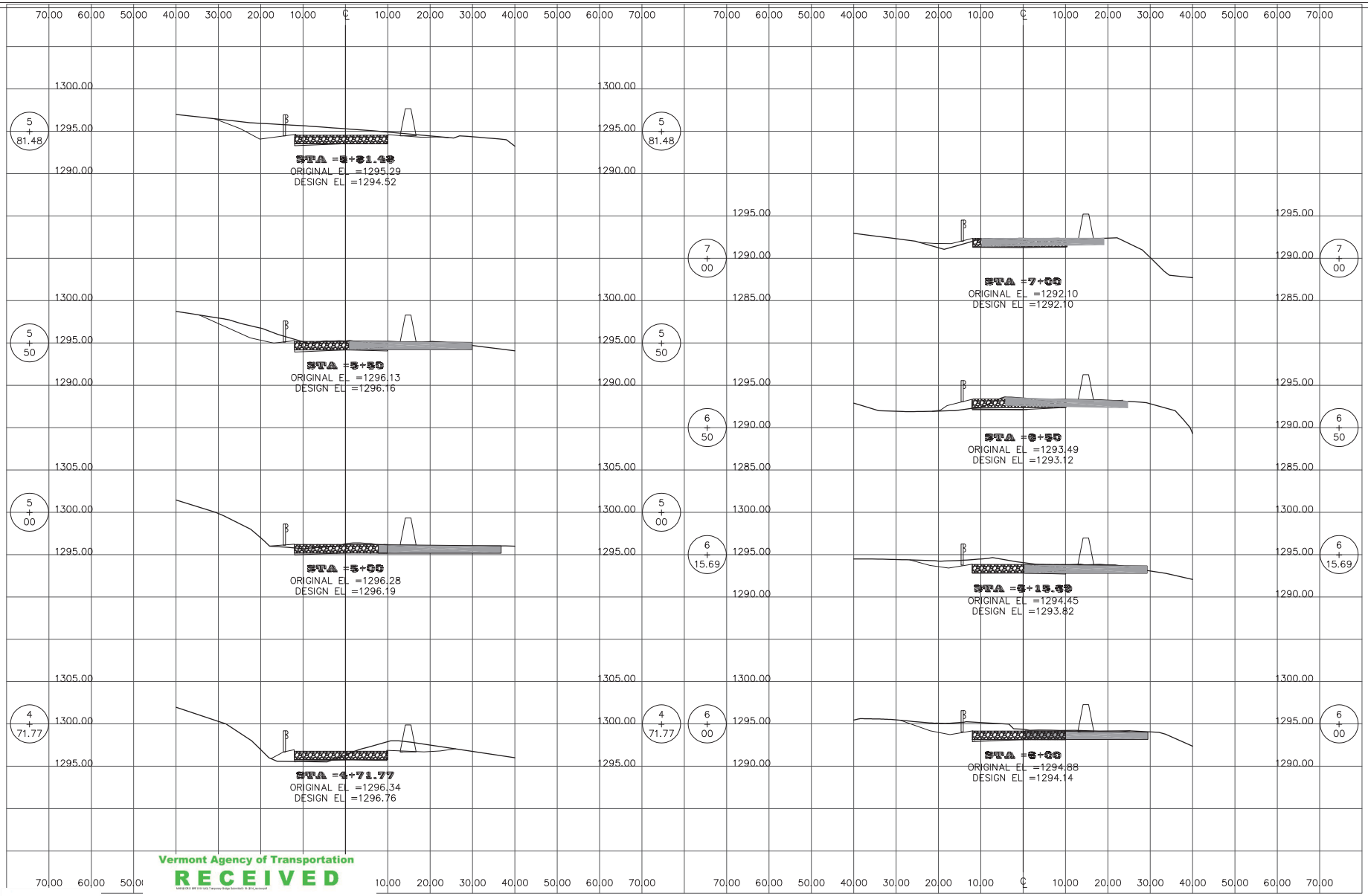

Vermont Agency of Transportation
RECEIVED

CK'D BY RK OK'D BY
March 18, 2014
RESUBMIT YES Rejected
BY KH DATE 3-20-2014

CROSS SECTIONS

RENAUD BROS. INC.
BRF 010-1(43)
ROUTE 9
MARLBORO, VT

DATE 3-20-14

BELL ENGINEERING
CIVIL & ENVIRONMENTAL
17 ECHO COVE WAY-SPOFFORD, NH 03462
(603) 363-9966

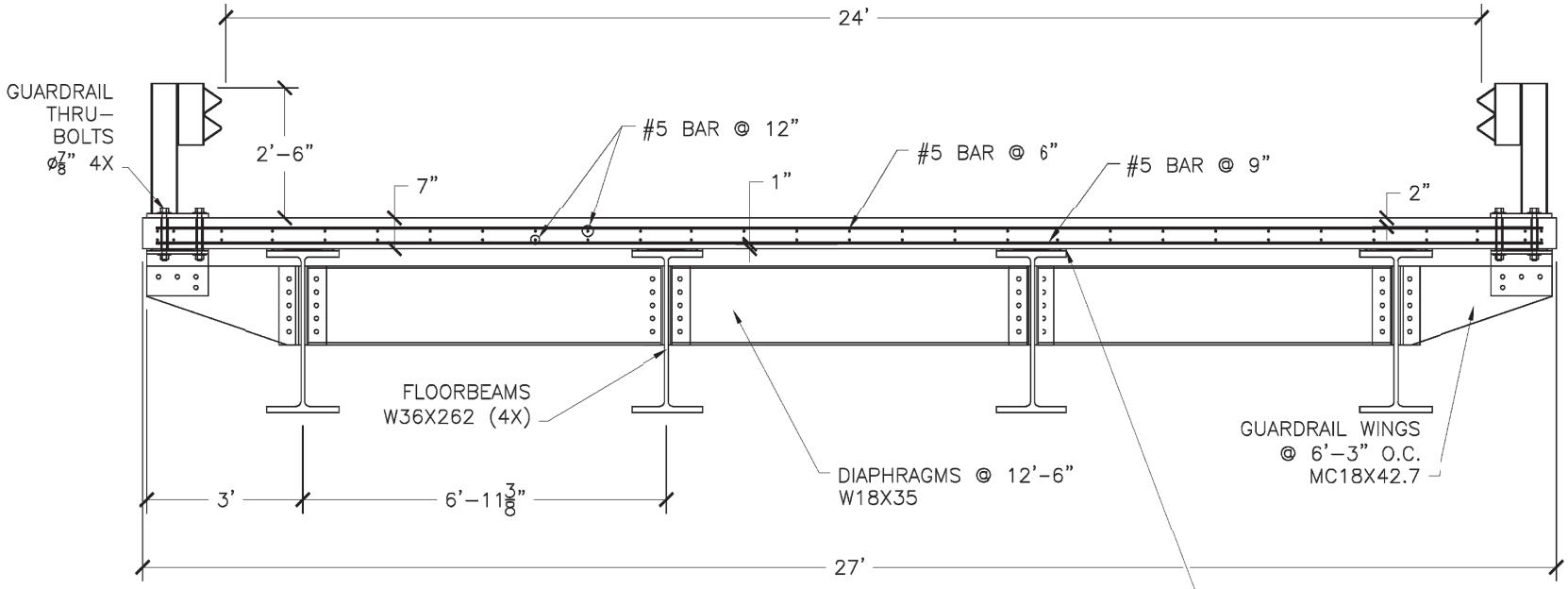

TEMP. BRIDGE SECTION
N.T.S.

PROVIDE 1/8" RUBBER SHIM @ STEEL TO CONCRETE FAYING SURFACES

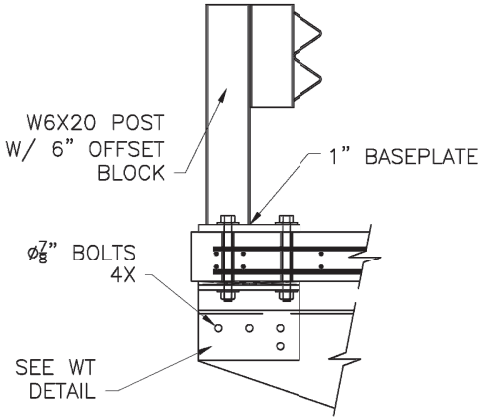

GUARDRAIL/SLAB CONN. DETAIL
N.T.S

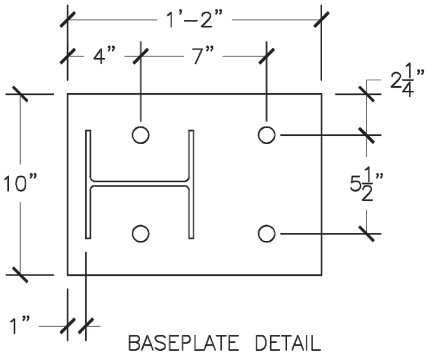

BASEPLATE DETAIL
N.T.S.

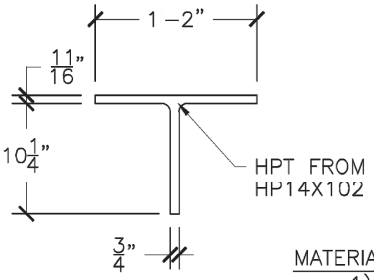

WT DETAIL
N.T.S.

MATERIAL NOTES:
1) REBAR TO BE GR. 60 MIN.
2) CONCRETE TO BE 5,000 PSI MIN.

Vermont Agency of Transportation
RECEIVED
CK'D BY RK OK'D BY
March 18, 2014
RESUBMIT BY KH YES Rejected DATE 3-20-2014

STATE OF VERMONT RONALD K. BELL No. 6994 REGISTERED PROFESSIONAL ENGINEER

REV.			
NO.	DATE	COMMENTS	
1	3/6/14	GUARDRAIL DETAILS	
2	3/17/14	REBAR COVERAGE	

DATE: 2/21/2014
DRAWN BY: A.D.
CHK'D BY: C.E.

JOB NAME: NARLBORO BRO 1442(35)
JOB NO:
SHEET NAME: TEMP. BRIDGE SECTION

RENAUD BROS. INC.
2855 FT. DRUM RD. VERNON VT. 05354
PH. (802) 257-7985 FAX (802) 257-7908

SHEET: 7

C:\Users\ADunkle\Documents\Works In Progress 2014\NARLBORO BRE010-1 (43)\TEMPORARY BRIDGE.dwg, 3/17/2014 10:30:59 AM

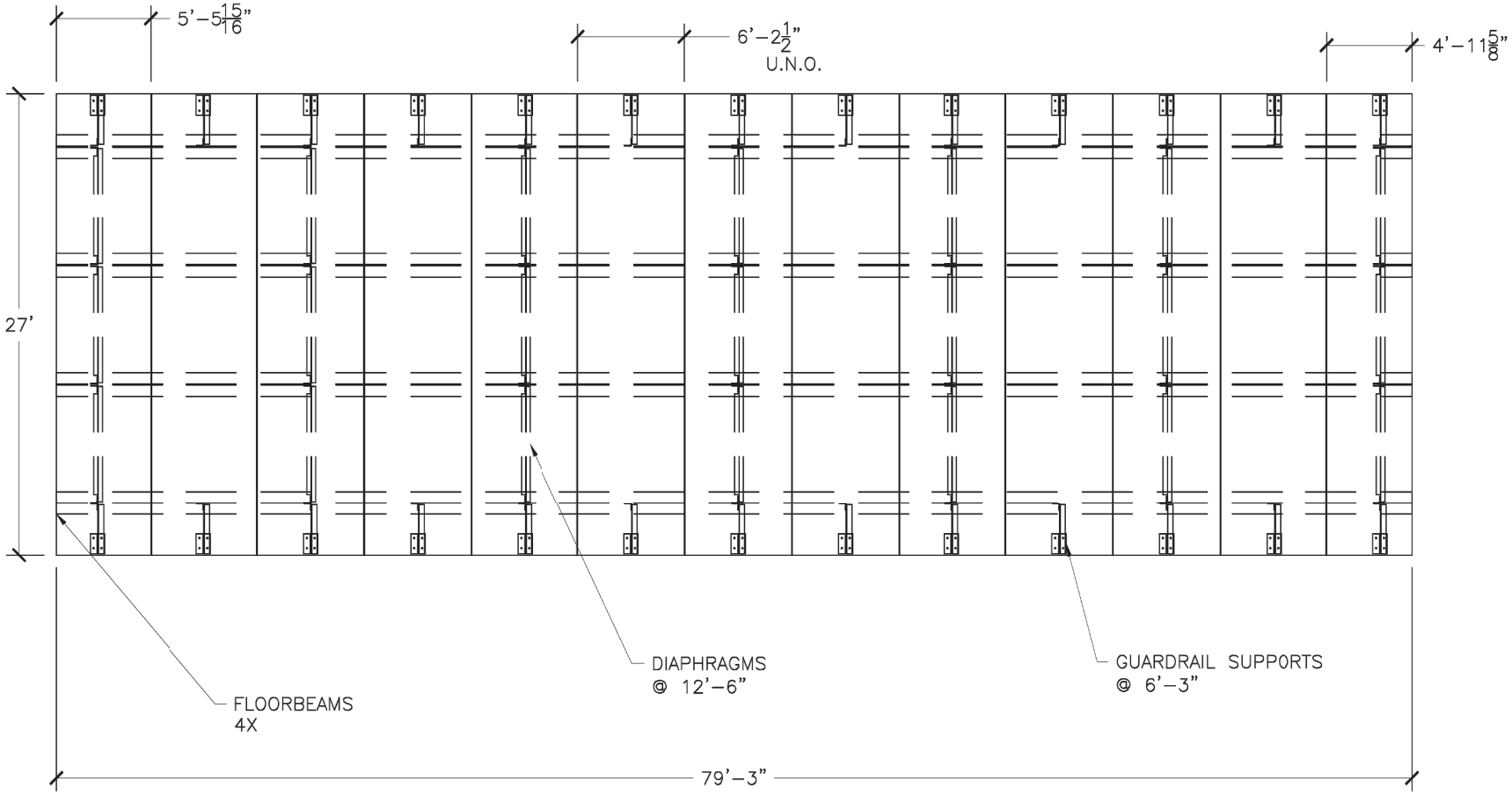

BRIDGE FRAMING PLAN
NOT TO SCALE

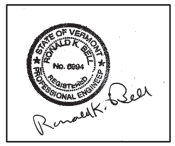

Vermont Agency of Transportation
RECEIVED
MARLBORO BRF 0101-1(43) Temporary Bridge Submittal 3-18-2014_letter.pdf
CK'D BY RK OK'D BY
March 18, 2014
RESUBMIT YES Rejected
BY KH DATE 3-20-2014

DATE:	2/21/2014
DRAWN BY:	A.D.
CHK'D BY:	C.E.

REV.		
NO.	DATE	COMMENTS

JOB NAME:	MARLBORO BRO 1442(35)
JOB NO:	
SHEET NAME:	BRIDGE PLAN

RENAUD BROS., INC.
DESIGN, BUILD & MAINTAIN
ROADS & BRIDGES
285 FT. BRIGGMAN RD. VERNON VT., 05354
PH: (802) 257-7985 FAX: (802) 257-7508

SHEET: 8

C:\Users\ADunklee\Documents\Works in Progress 2014\MARLBORO BRF010-1 (43)\TEMPORARY BRIDGE.dwg, 3/17/2014 10:30:59 AM

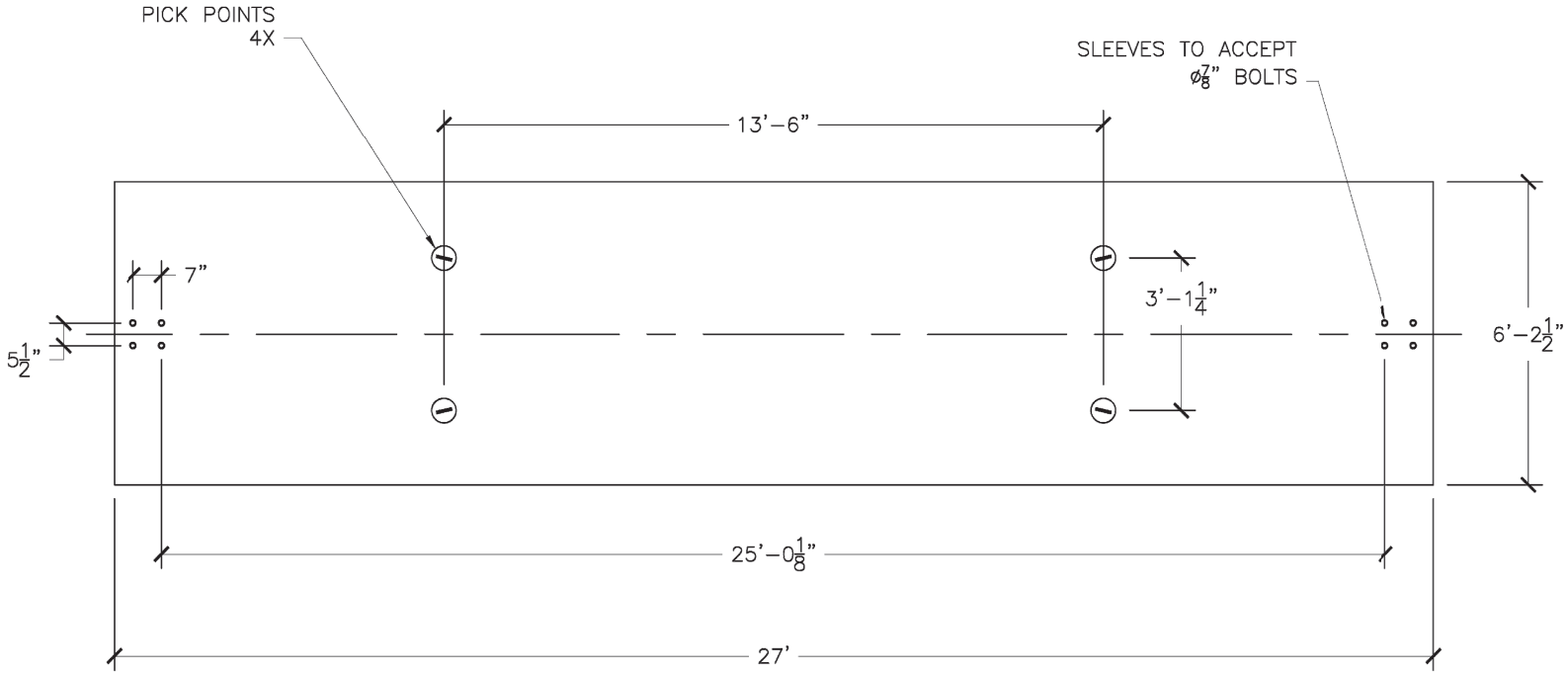

SLAB PLAN-VIEW
NOT TO SCALE

STATE OF VERMONT
RONALD K. REEL
No. 6994
REGISTERED
PROFESSIONAL ENGINEER

Vermont Agency of Transportation
RECEIVED
MARLBORO BRF 010-1(43) Temp pedi Slab & abutmt 3-18-2014 rcvd.pdf
CK'D BY RK OK'D BY
March 18, 2014
RESUBMIT YES Rejected
BY KH DATE 3-20-2014

		REV.			JOB NAME:	MARLBORO BRO 1442(35)
		NO.	DATE	COMMENTS	JOB NO:	
					SHEET NAME:	SLAB PLAN
DATE:	2/21/2014				R. RENAUD BROS., INC.	SHEET: 9
DRAWN BY:	A.D.				285 FT. BRIGHAM RD. WINDSOR VT., 05154 PH: (802) 291-7985 FAX: (802) 291-7508	
CHK'D BY:	C.E.					

C:\Users\ADunklee\Documents\Works In Progress 2014\MARLBORO BRF010-1 (43)\TEMPORARY BRIDGE.dwg, 3/17/2014 10:30:59 AM

"W" BEAM GUARDRAIL WITH STEEL POSTS

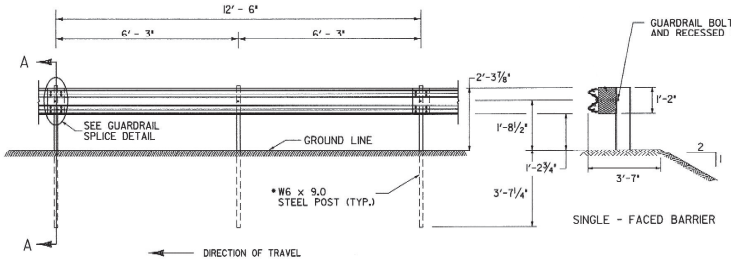

ELEVATION FROM ℄ OF ROAD

SECTION A -A

PLAN

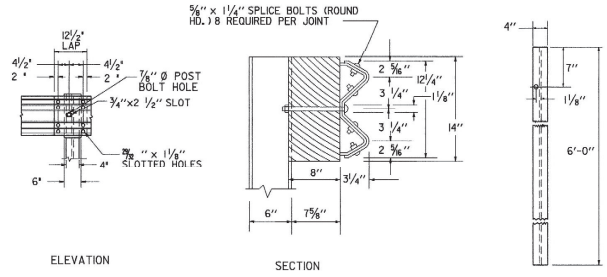

GUARDRAIL SPLICE DETAIL

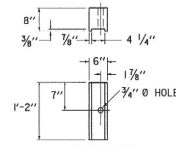

POST FACE
MODIFIED WOOD BLOCKOUT- ROUTED
6" X 8" X 1'-2"
FOR USE W/ STEEL POSTS ONLY

NOTES:

1. BLOCKS SHALL BE MADE OF TIMBER WITH A STRESS GRADE OF 1200 PSI OR MORE. TESTING SHALL BE IN ACCORDANCE WITH WEST COAST LUMBER INSPECTION BUREAU, SOUTHERN PINE INSPECTION BUREAU OR OTHER APPROPRIATE ASSOCIATION. TIMBER FOR BLOCKS SHALL BE ROUGH SAWN (UNPLANED) WITH DIMENSIONS INDICATED. THE SIZE TOLERANCE OF ROUGH SAWN BLOCKS IN THE DIRECTION OF THE BOLT HOLES SHALL BE NOT MORE THAN +/- ¼".
2. SUPPLY WOOD BLOCKS PER AASHTO M 168.
3. TREAT WITH PRESERVATIVE PER AASHTO M 133.
4. BLOCKOUTS MAY ALSO BE MADE OF APPROVED ALTERNATIVE MATERIAL.

GUARDRAIL DELINEATOR

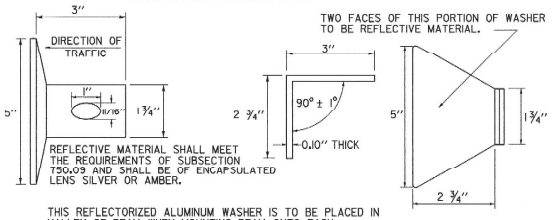

REFLECTIVE MATERIAL SHALL MEET THE REQUIREMENTS OF SUBSECTION 750.09 AND SHALL BE OF ENCAPSULATED LENS SILVER OR AMBER.

THIS REFLECTORIZED ALUMINUM WASHER IS TO BE PLACED IN VALLEY OF BEAM WHEN MOUNTING BEAM ONTO EACH FIFTH POST. WASHER SHALL MEET SPECIFICATION REQUIREMENTS FOR A.S.T.M. B-209 ALLOY 5052-H32

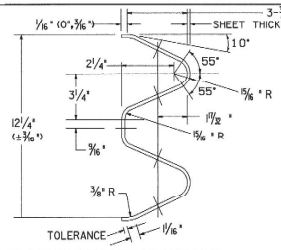

ARTBA RE-3(2x8)-3'-12'-6" CLASS A, TYPE 10-73

TYPICAL GUARDRAIL SECTION

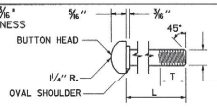

GUARDRAIL BOLT

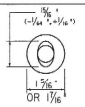

5/8" NO 2

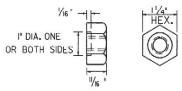

RECESSED NUT FOR GUARDRAIL BOLT

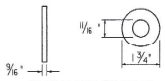

WASHER FOR 5/8" BOLTS
ARTBA F-13-73
NOTE: WASHER IS USED UNDER RECESSED NUT WHERE GUARDRAIL BOLT IS USED WITH WOOD POSTS.

GUARDRAIL BOLTS				FASTENER USED IN	
BOLT DES.	ARTBA REF. NO.	L	T (MIN.)	STEEL POSTS	WOOD POSTS
"A"	F-3(1¼)-76	11/4"	1"	X	X
"C"	F-3(9/2)-76	9½"	1¾"	X	
"D"	F-3(18)-76	18"	2½"		X
"F"	F-3(25)-76	25"	2"		X

GENERAL NOTES:

1. GUARDRAIL SHALL MEET THE REQUIREMENTS OF AASHTO M 180, CLASS A, TYPE I, UNLESS OTHERWISE DESIGNATED
2. GUARDRAIL SHALL BE SINGLE FACED UNLESS OTHERWISE DESIGNATED
3. GUARDRAIL SECTIONS SHALL BE LAPPED IN THE DIRECTION OF TRAFFIC FLOW FOR THE LANE NEAREST THE GUARDRAIL.
4. FOR DESCRIPTION AND SPECIFICATION OF PARTS IDENTIFIED BY (ARTBA ...) AND OTHER DETAILS OF POSTS, POST ACCESSORIES, FASTENERS & RAIL ELEMENTS, SEE AASHTO-AGC-ARTBA JOINT TASK FORCE NO. 13, TITLED "A GUIDE TO STANDARDIZED HIGHWAY BARRIER HARDWARE", LATEST EDITION.
5. STANDARD STEEL BEAM TO BE ⅛" AND THE HEAVY DUTY TO BE 3/16" THICK.

OTHER STANDARD REQUIRED G-1d

STEEL BEAM GUARDRAIL WITH STEEL POSTS
STEEL BEAM GUARDRAIL WITH WOOD POSTS

VERMONT AGENCY OF TRANSPORTATION

STANDARD

G-1

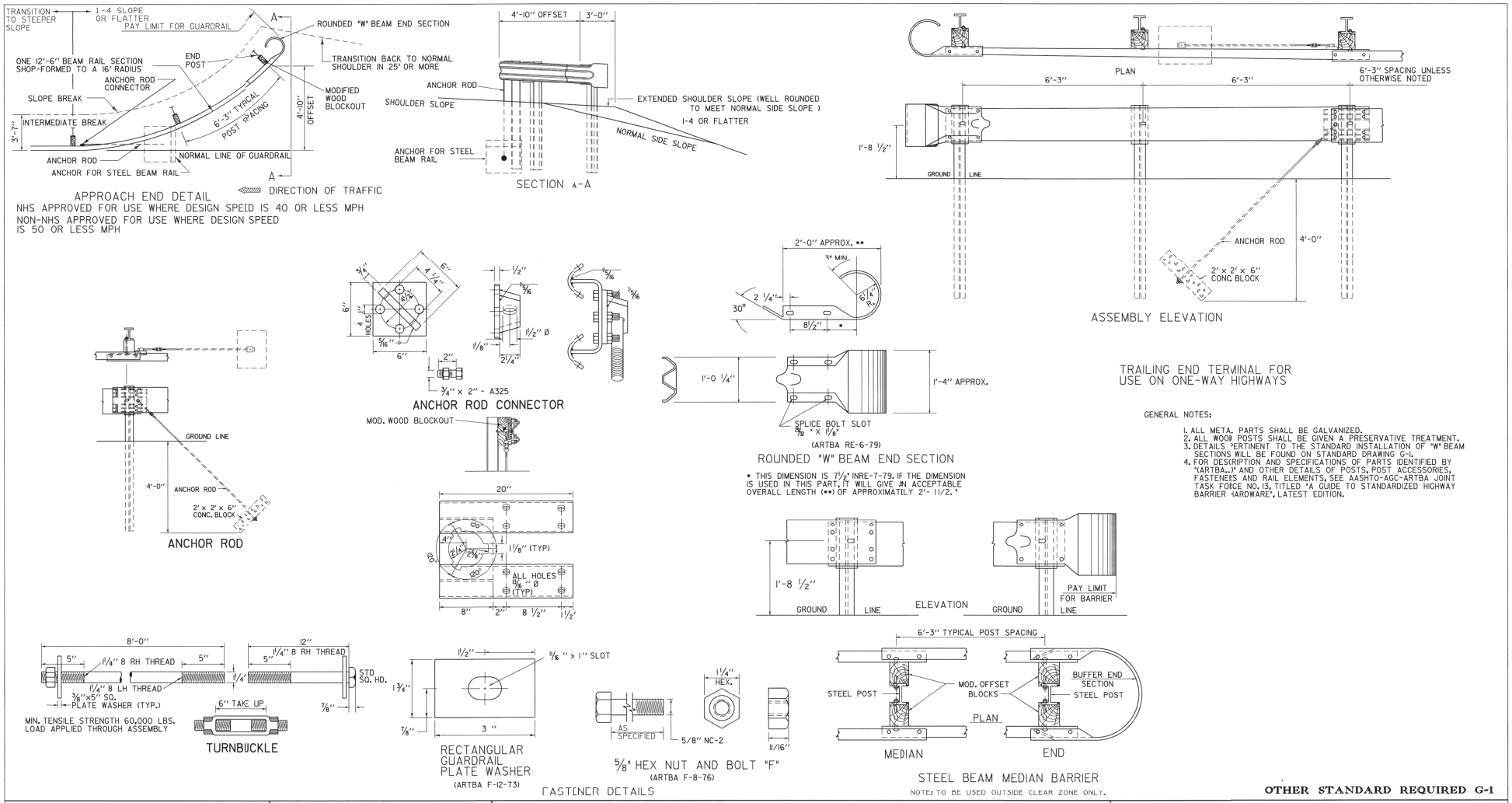

GENERAL NOTES:

1. ALL METAL PARTS SHALL BE GALVANIZED.
2. ALL WOOD POSTS SHALL BE GIVEN A PRESERVATIVE TREATMENT.
3. DETAILS PERTINENT TO THE STANDARD INSTALLATION OF "W" BEAM SECTIONS WILL BE FOUND ON STANDARD DRAWING G-1.
4. FOR DESCRIPTION AND SPECIFICATIONS OF PARTS IDENTIFIED BY "(ARTBA..)" AND OTHER DETAILS OF POSTS, POST ACCESSORIES, FASTENERS AND RAIL ELEMENTS, SEE AASHTO-AGC-ARTBA JOINT TASK FORCE NO. 13, TITLED "A GUIDE TO STANDARDIZED HIGHWAY BARRIER HARDWARE", LATEST EDITION.

OTHER STANDARD REQUIRED G-1

REVISIONS AND CORRECTIONS
JUNE 1, 1994 - REISSUED, WITHOUT CHANGE, UNDER NEW SIGNATURES.
JAN.3,2000 - UPDATED TO REFLECT METRIC STD. CHANGES

APPROVED

DIRECTOR OF PROJECT DEVELOPMENT

ROADWAY AND TRAFFIC DESIGN ENGINEER

STEEL BEAM GUARDRAIL APPROACH END TERMINAL
STEEL BEAM GUARDRAIL TRAILING END TERMINAL
ANCHOR FOR STEEL BEAM GUARDRAIL
STEEL BEAM MEDIAN BARRIER

VERMONT AGENCY OF TRANSPORTATION

STANDARD

G-1d

PRECAST CONC. DECK ON W BEAMS

Vermont Agency of Transportation
RECEIVED
MARLBORO BRF 010-1(43) Temporary Bridge Submittal 3-18-2014_review.pdf

CK'D BY RK OK'D BY
March 18, 2014
RESUBMIT YES Rejected
BY KH DATE 3-20-2014

PROJECT NAME/ LOCATION: Marl. BRF 010-1(43)
SHEET #: 1 OF 22
CALCULATED BY: Ron Bell DATE: 3-11-14
CHECKED BY: DATE:
SCALE: NTS

STATE OF VERMONT RONALD K. BELL NO 8884 PROFESSIONAL ENGINEER

1. TEMPORARY DECK DESIGN

FROM 9.7.5 - PRECAST DECK ON GIRDERS

MIN. DEPTH = 7.0"

9.7.2.5 - REINFORCEMENT REQUIREMENTS
MIN. BOT LAYER = 0.27 in^2/ft
MIN. TOP LAYER = 0.18 in^2/ft^2

FOR ABSOLUTE MIN. 7.0" DECK COVER REQ =
2.0" TOP
1.0" BOTTOM } TO PROVIDE 4" CORE

DECK PANELS ARE CONNECTED AT EACH SIDE TO STEEL WT SECTION (W) 4 BOLTS THROUGH GUARD RAIL PLATE.

TO CHECK CONNECTION FORCES ASSUME REAR AXLE IS ON EDGE SUCH THAT THE WEIGHT OF THE ENTIRE AXLE IS 1' FROM EDGE OF GUARD RAIL;

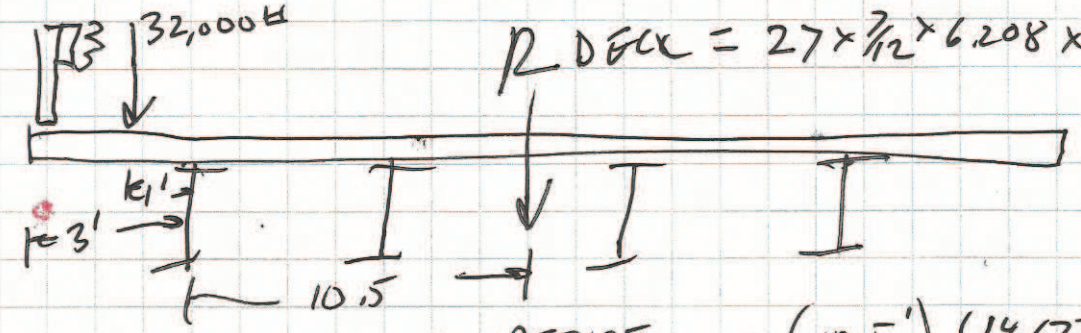

R DECK = 27 × 7/12 × 6.208 × 150 = 17,677 #s

$$FS = \frac{M\ RESIST}{M\ OVERTURN} = \frac{(10.5')(14{,}677\#)}{(1')(32{,}000\#)} = 4.816$$

∴ DECK WEIGHT SUFFICIENT TO HOLD PANELS IN PLACE AND CONNECTIONS @ GUARD RAIL PROVIDE ADDITIONAL FS.

BELL ENGINEERING
CIVIL & ENVIRONMENTAL
17 ECHO COVE WAY
SPOFFORD, NEW HAMPSHIRE 03462
(603) 363-9966

PROJECT NAME/ LOCATION: Marlboro BRF 010-1-(43)
SHEET #: 2 OF 22
CALCULATED BY: Ron Bell DATE: 3-11-14
CHECKED BY: DATE:
SCALE:

DESIGN STRENGTH: $f_c' = 5{,}000$ PSI ; $f_y = 60$ KSI

DESIGN DECK FOR STRENGTH I LIMIT STATE

BEAM SPACING = 6'-11 3/8" = 6.948'

$$W_{pc} = \frac{(150\ K)}{ft^2} \times \frac{7''}{12''/ft} \times (1\ ft) = 0.088\ K/ft$$

$$M_{DC} = \frac{0.088\ K/ft \times (6.948)^2}{10} = 0.425\ K\text{-}ft/ft$$

FROM APPENDIX 4 $M_{LL+IM} = 5.21$ K-ft/ft

$$M_{Strength\ I} = (1.25)(0.425) + 1.75(5.21)$$
$$= 9.628\ K\text{-}FT = 115.536\ m\text{-}KIP$$

$$\phi M_n = \phi\left[A_s f_y \left(d_s - \frac{1}{2}\frac{A_s f_y}{0.85 f_c' b}\right)\right] \geq M_{str.\ I}$$

$\phi = 0.9$
$f_y = 60$ KSI
$f_c' = 5$ KSI
$d_s = 7'' - (1''\ cover - 0.5 \times 0.625'')$
$= 5.687''$

STATE OF VERMONT
RONALD K BELL
NO 6994
PROFESSIONAL ENGINEER

Appendix A4 states that the moments were calculated using the equivalent strip method. This deck type is not listed in Table 4.6.2.1.3-1-Equivalent Strips. The assumptions in A4 state *'It was found that the effect of two 25k axles of the tandem, placed at 4.0 ft from each other, produced maximum effects under each of the tires approximately equal to the effect of the 32k truck axle. The tandem produces a larger total moment, but this moment is spread over a larger width."* Since this deck is not continuous in the longitudinal direction, it seems that the moment due to the two 25k axles of the tandem should be considered for design since the load can only be distributed over the width of a panel (panel width ranges from 4.97' to 6.21'). It is expected that the moment will be considerably higher than the tabulated values since the panel width is relatively narrow.

BRF 010-1-(43)

BELL ENGINEERING
CIVIL & ENVIRONMENTAL
17 ECHO COVE WAY
SPOFFORD, NEW HAMPSHIRE 03462
(603) 363-9966

PROJECT NAME/ LOCATION: ~~BRF 014-2(35)~~
SHEET #: 3 OF 22
CALCULATED BY: Ron Bell DATE: 2-20-14 & 3-11-14
CHECKED BY: DATE:
SCALE:

SOLVE FOR As for Positive Reinforcement

BY TRIAL AND ERROR: TRY #5 bar @ 9" o.c.

$= (12/9)(3.14)(\frac{.625}{2})^2 = 0.409 \text{ in}^2$

$$0.9\left[(0.409 \times 60)\left(5.687 - \tfrac{1}{2}\frac{0.409 \times 60}{0.85 \times 5 \times 12}\right)\right]$$

$= 120.289$ K-in $>$ ~~114.50~~ 115.536 K-in OK

BUT TRY #5 Bars @ 10" o.c.

$A = (12/10)(3.14)(\frac{.625}{2})^2 = 0.368$

$$0.9\left[((0.368)(60))\left(5.687 - \tfrac{1}{2}\frac{0.368 \times 60}{(0.85)(5)(12)}\right)\right]$$

$= 120.789 >$ ~~114.50~~ 115.536 OK

TRY 12" o.c. $A_s = 0.307$

$$0.9\left[((0.307)(60))\left(5.687 - \tfrac{1}{2}\frac{0.307 \times 60}{(0.85)(5)(12)}\right)\right]$$

$= 101.4 <<<$ ~~114.50~~ 115.536 NG

$\boxed{\text{PICK \#5 bars @ 10" o.c.}}$

BRF 010-1 (43)

BELL ENGINEERING
CIVIL & ENVIRONMENTAL
17 ECHO COVE WAY
SPOFFORD, NEW HAMPSHIRE 03462
(603) 363-9966

PROJECT NAME/ LOCATION: ~~1442 (35)~~
SHEET #: 4 OF 22
CALCULATED BY: Ron Bell DATE: 2-24-17 13-1114
CHECKED BY: DATE:
SCALE:

STATE OF VERMONT RONALD K. BELL No. 6094 REGISTERED PROFESSIONAL ENGINEER

CHECK CRACK CONTROL

$$s \le \frac{700\gamma_e}{\beta_s f_s} - 2d_c$$

s = spacing of reinforcement closest to tension face

where: $\beta_s = 1 + \frac{d_c}{0.7(h-d_c)}$

where $d_c = 1.0''$ clear $+ 0.5 \times 0.625$ in bar

$= 1.3125$ in.

$h = 7''$

$\therefore \beta_s = 1 + \frac{1.3125}{(0.7)(7-1.3125)} = 1.330$

$\Downarrow$ 5.688

$\gamma_e = 0.75$

$f_s = \frac{M_{service}}{A_s j d_s}$

$f_s =$

$K = \sqrt{((.005)(7))^2 + (2)(.005)(7)} - (.005)(7)$

$= 0.036$

$j = 1 - \frac{K}{3} = 1 - \frac{0.036}{3}$

$= 0.988$

Where;

$A_s = 0.368$ in2

$j = 1 - \frac{k}{3}$

$K = \sqrt{(\rho n)^2 + 2\rho n} - \rho n$

$\rho = \frac{A_s}{bd_s} = \frac{0.368 \text{ in}^2}{(12'')(5.687'')}$

$= 0.005$

$n = \frac{E_s}{E_c} = 7$ for

$4.6 \le f'_c \le 6.0$ C.C.10.1.1b

BELL ENGINEERING
CIVIL & ENVIRONMENTAL
17 ECHO COVE WAY
SPOFFORD, NEW HAMPSHIRE 03462
(603) 363-9966

PROJECT NAME/ LOCATION: BRF 010-1(43) ~~1442(38)~~
SHEET #: 5 OF 22
CALCULATED BY: Ron Bell DATE: 2-20-14 & 3-11-14
CHECKED BY: DATE:
SCALE:

$\gamma_{ie} = 0.75$ for decks exposed to water

$M_{SERVICE\ I} = 1.0\,(DC + LL + IM)$

$= 0.425 + 5.21$

$= 5.635$ K-FT

$= 67.620$ K-IN

$$f_s = \frac{67.620 \text{ K-IN}}{(0.368 \text{ in}^2)(0.868)(5.687)''} = 32.203 \text{ KSI}$$

$$S \leq \frac{(700)(0.75)}{(1.330)(32.203} \text{ in} - (2)(1.3125) \text{ in} =$$

$\leq 12.043 - 2.625 = 9.418$

10" ≥ 9.418 in N.G.

∴ MODIFY SPACING TO PROVIDE

$\boxed{\text{\#5 bars @ 9" O.C.}}$

STATE OF VERMONT
RONALD K. BELL
No. 6834
REGISTERED PROFESSIONAL ENGINEER

BRF 010-1 (43)

BELL ENGINEERING
CIVIL & ENVIRONMENTAL
17 ECHO COVE WAY
SPOFFORD, NEW HAMPSHIRE 03462
(603) 363-9966

PROJECT NAME/ LOCATION: ~~(442 (35)~~

SHEET #: 6 OF 22

CALCULATED BY: Ron Bell DATE: 2-20-14 & 3-11-14

CHECKED BY: DATE:

SCALE:

STATE OF VERMONT RONALD K. BELL No. 6334 REGISTERED PROFESSIONAL ENGINEER

CHECK MIN. REINFORCEMENT

$M_r > M_{CR}$

$M_{CR} = \gamma_3 \gamma_1 S f_r$ (K-in)

$S = \frac{1}{6} bh^2 = \frac{1}{6}(12")(7)^2 = 98 \text{ in}^3$

$f_r = 0.25\sqrt{f'_c} = 0.24\sqrt{5.0 \text{ ksi}} = 0.537 \text{ ksi}$

$\gamma_3 = 0.75$ for grade 60.

$\gamma_1 = 1.6$ for non segmental

$M_{CR} = (0.75)(1.6)(98)(0.537) = 63.151$ K-in

$M_r = \phi M_N = 120.289$ (see pg. 3 for trial with #5 @ 9" o.c.)

$120.289 > 63.151$ ∴ OK

BELL ENGINEERING
CIVIL & ENVIRONMENTAL
17 ECHO COVE WAY
SPOFFORD, NEW HAMPSHIRE 03462
(603) 363-9966

PROJECT NAME/ LOCATION: BRF 010-1 (43) ~~LITTLE (35)~~
SHEET #: 7 OF 22
CALCULATED BY: Ron Bele DATE: 2-20-14 & 3-11-14
CHECKED BY: DATE:
SCALE:

Negative Reinforcement

From 'Positive calculations $w_{DC} = 0.088$ k/ft

Span length: Reduce by ½ flange width = 6.5'

$M_{DC} = \left(\frac{1}{10}\right)(0.088\ k/ft)(6.5)^2 = 0.372$ k-ft

LL+IM MOMENTS FROM A-4 (Note 4.6.2.1.6)

for negative moments taken as ¼ flange width from c/L of support: $\frac{16.5'}{4} = 4.38''$ use 3" from table

$\therefore M_{LL+IM} = 5.17$ K-FT

Factored moment $= \gamma_i \left[\overset{1.25}{\cancel{1.0}}(M_D + 1.75\, M_{LL+IM})\right]$ = 9.513 K-ft ~~= 9.420 K-ft~~ ~~= 113.03 K-in~~ = 114.150 k-in

Design for Moment Capacity

$\phi M_n = \phi\left[A_s f_y \left(d_s - \frac{1}{2}\frac{A_s f_y}{0.85 f'_c b}\right)\right] \geq M_{strength\,I}$ (113.037)

$\phi = 0.9$

$f_y = 60$ KSI

$f'_c = 5$ KSI

To account for broom finish

$d_s = 7''$ slab $- (2'' + 0.25''$ cover$) - 0.5 \times 0.625$ bar $= 5.063''$

$b = 12$ in

Appendix A4 states that the moments were calculated using the equivalent strip method. This deck type is not listed in Table 4.6.2.1.3-1-Equivalent Strips. Same concerns as noted on sheet 2 of 22.

BRF 010-1 (43)

BELL ENGINEERING
CIVIL & ENVIRONMENTAL
17 ECHO COVE WAY
SPOFFORD, NEW HAMPSHIRE 03462
(603) 363-9966

PROJECT NAME/ LOCATION: ~~144-2 (35)~~
SHEET #: 8 OF 22
CALCULATED BY: Ron Bell DATE: 2-20-1983-11-14
CHECKED BY: DATE:
SCALE:

TRY, #5 bars @ #5 bars @ 9" O.C. $A_s = 0.409 \text{ in}^2$

$$= 0.9\left[(0.409 \times 60)\left(5.063 - \left(\tfrac{1}{2}\right)\left(\frac{0.409 \times 60}{(0.85)(5)12}\right)\right)\right]$$

$= 118.342$ K-in > ~~[illegible]~~ ~~[illegible]~~ K-in OK
~~[illegible]~~ K-in
114.150

Check Cracking for Negative Moment

$$s \le \frac{700\gamma_e}{\beta_s f_s} - 2d_c$$

where

$$\beta_s = \frac{1 + d_c}{0.7(h - d_c)}$$

$$\rho = \frac{A_s}{b d_s} = \frac{0.409 \text{ in}^2}{(12 \text{ in})(5.063)}$$

$= 0.007$

where $d_c =$ $(2.0 + 0.25)$ in clear + 0.5×0.625

$= 2.563$ in

$n = 7''$

$n = 7$ from C 6.10.1.1b for $4.6 \le f'_c \le 6.0$

$$\therefore \beta_s = 1 + \frac{2.563}{0.7(7 - 2.563)}$$

$= 1.825$

$$K = \sqrt{[(.007)(7.0)]^2 + (2)(.007)(7.0)} - (.007)(7)$$

$= 0.226$

$\gamma_e = 0.75$

$f_s = M_{service\ I} = 1(1.0 M_{DC} + 1.0 M_{LL+IM})$ $f_s = \dfrac{M_{service\ I}}{A_s j d_s}$

$= 5.542$ K-ft

$= 66.504$ K-IN

$A_s = 0.409$

$j = 1 - \frac{K}{3}$

$K = \sqrt{(\rho n)^2 + 2\rho n} - \rho n$

$j = 1 - \frac{0.226}{3} = 0.925$

BELL ENGINEERING
CIVIL & ENVIRONMENTAL
17 ECHO COVE WAY
SPOFFORD, NEW HAMPSHIRE 03462
(603) 363-9966

PROJECT NAME/ LOCATION: BRF 010-1(43) ~~BRO 1442 (35~~
SHEET #: 9 OF 22
CALCULATED BY: Ron Bell DATE: 2-20-14 ~~13-11-14~~
CHECKED BY: DATE:
SCALE:

STATE OF VERMONT RONALD R. BELL No. 6284 REGISTERED PROFESSIONAL ENGINEER

$$f_s = \frac{M_{service}}{A_s\, j\, d_s} = \frac{66.504 \text{ K-in}}{(.409 \text{ in}^2)(0.925)(5.063)}$$

$$= \cancel{31,223}\ 34,720 \text{ KSI}$$

$$s \le \frac{700\, \phi_e}{\phi_s\, f_s} - 2d_c$$

$$s \le \frac{(700)(0.75)}{(1.825)(34.720)} - (2)(2.563) = 3.158 \text{ in}$$

$9'' > 3.158''$ No. 6

TRY #5 bars @ 6" c to c spacing. $A_s = 0.62 \text{ in}^2$

$$\rho = \frac{0.62}{(12)(5.063)} = 0.010$$

$$K = \sqrt{[(.01)(7.0)]^2 + (2)(.01)(7) - (.01)(7)} = 0.274$$

$$j = 1 - \frac{K}{3} = 0.909$$

$$f_s = \frac{M_{service}}{A_s\, j\, d_s} = \frac{66.504}{(0.62)(0.909)(5.063)} = 23.307 \text{ KSI}$$

$$s \le \frac{(700)(0.75)}{(1.825)(23.307)} - (2)(2.563) = 7.217$$

$6'' < 7.217$ OK

Distribution Reinforcement = 0.67% of Primary as per 9.7.3.2 for bottom Bars

∴ #5 bars @ ~~9"~~ 12" O.C.

NOTE: Top Longitudinal steel only needs to meet temp. + shrinkage ∴ #5 @12" O.C adequate

BEAM CALCULATIONS:

BELL ENGINEERING
CIVIL & ENVIRONMENTAL
17 ECHO COVE WAY
SPOFFORD, NEW HAMPSHIRE 03462
(603) 363-9966

PROJECT NAME/ LOCATION: 010-(17)(43)
SHEET #: 10 OF 22
CALCULATED BY: Ron Bell DATE: 2-6-2014 + 3-11-14
CHECKED BY: DATE:
SCALE:

TEMPORARY BRIDGE CALCULATIONS
STEEL BEAMS (NOT A COMPOSITE DESIGN)

BEAMS @ 36x260 WITH 1x14 PLATE ON BOTT FLANGE
SEE SECTION CALCULATION
$A = 90.50 \text{ in}^2$
$S_x = 1317.61 \text{ in}^3$
$Z_x = 1515.0 \text{ in}^3$

DECK ACTS @ DL ONLY

DESIGN = HL 93 SPAN FROM ℄ + ℄ BEARING = 76'

DESIGN TRUCK MOMENT > DESIGN TANDEM

DESIGN TRUCK =

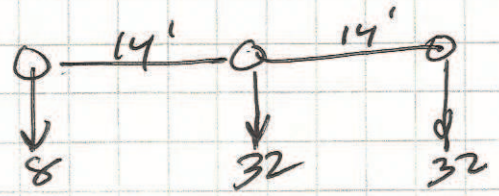

FROM BALANCE POINT OF DESIGN TRUCK LOADS ACT 19.33' (FRONT), 33.77' + 47.33'

LOAD DISTRIBUTION

UNIFORM LANE LOAD = $S/10 = \frac{7.0}{10} = 0.70 \times 0.64 = 0.448$ K/ft

WHEEL LOADS:

FOR EXTERIOR BEAMS (WORST CASE)

TABLE 4.6.2.2.2d-1 USE LEVER RULE

STATE OF VERMONT
RONALD K. BELL
NO 8884
PROFESSIONAL ENGINEER

BELL ENGINEERING
CIVIL & ENVIRONMENTAL
17 ECHO COVE WAY
SPOFFORD, NEW HAMPSHIRE 03462
(603) 363-9966

PROJECT NAME/ LOCATION: BRF 010-01 (43)
SHEET #: 11 OF 22
CALCULATED BY: Ron Bell DATE: 3-11-14
CHECKED BY: DATE:
SCALE:

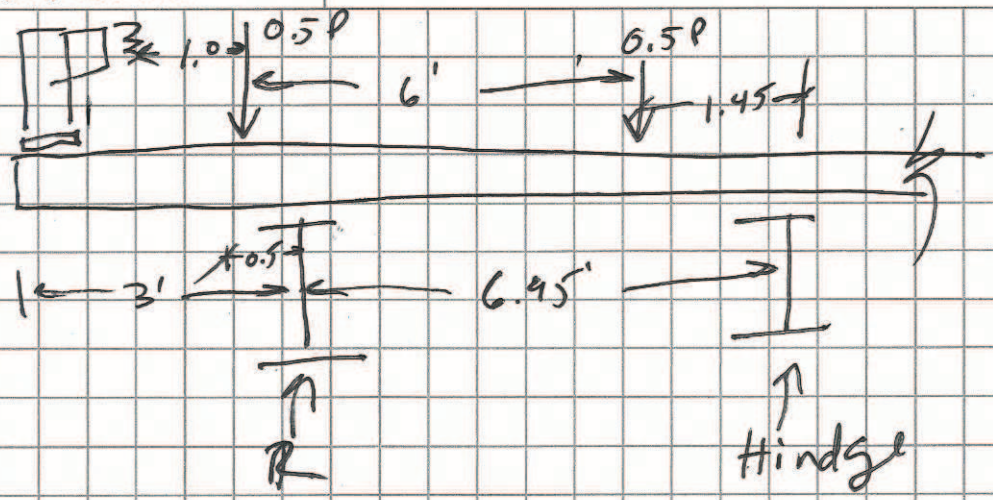

STATE OF VERMONT
RONALD K BELL
NO 9904
PROFESSIONAL ENGINEER

$M_{Hinge} = -(1.45)(0.5P) - (7.45 \times 0.5P) + 6.95(R) = 0$

$R = 0.64P$

Dynamic Load Allowance = 33%
V Trans Load Modifier for temp Bridge = 0.9
Multiple Lane factor for one lane design = 1.2

} 1.436

FRONT WHEEL LOAD = (0.64) (8 KIPS) (1.436) = 7.352 KIPS (DF)

REAR WHEEL LOAD = (0.64) (32) (1.436) = 29.409 KIPS

DL ON EXTERIOR BEAM = $(7/12)(150)\left[\frac{6.95}{2} + 3\right] + 50$ #/ft

= 616.56 #/ft = 0.616 K/ft

WORST CASE WHEEL LOAD LOCATION:

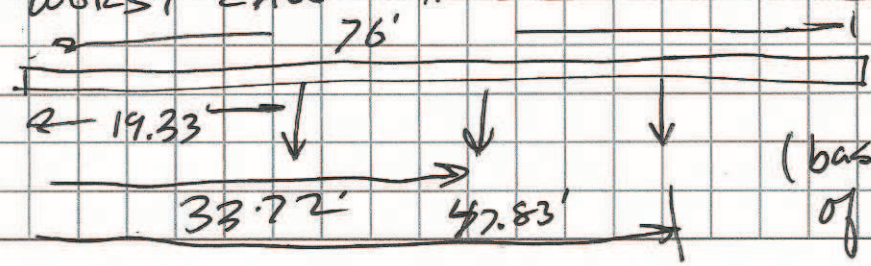

(based on balance pt. of design truck)

BELL ENGINEERING
CIVIL & ENVIRONMENTAL
17 ECHO COVE WAY
SPOFFORD, NEW HAMPSHIRE 03462
(603) 363-9966

PROJECT NAME/ LOCATION: BRF 010-D1(43)
SHEET #: 12 OF 22
CALCULATED BY: Ron Bell DATE: 3-11-14
CHECKED BY: DATE:
SCALE:

FOR STRENGTH I DESIGN FACTORS ARE
DC = 1.25
LL+IM = 1.75
FROM ENERCALC: M = 2,867.692 K-ft

General Beam Properties

Elastic Modulus 29,000.0 ksi

Span #1 Span Length = 76.0 ft Area = 90.50 in^2 Moment of Inertia = 21,408.6 in^4

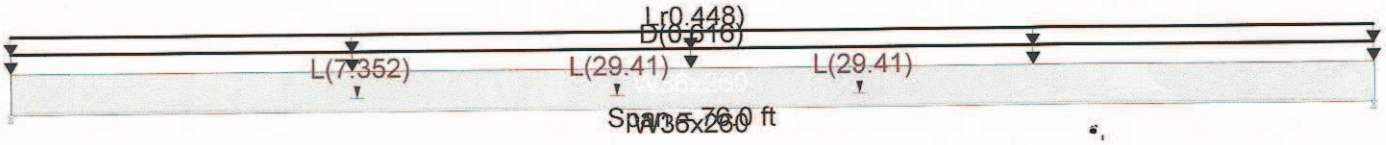

Applied Loads

Service loads entered. Load Factors will be applied for calculations.

Beam self weight calculated and added to loads
Load(s) for Span Number 1
Point Load : L = 7.352 k @ 19.330 ft ← FRONT
Point Load : L = 29.410 k @ 33.770 ft ← REAR
Uniform Load : D = 0.6160 k/ft, Tributary Width = 1.0 ft ← DL
Point Load : L = 29.410 k @ 47.330 ft ← REAR
Uniform Load : Lr = 0.4480 k/ft, Tributary Width = 1.0 ft ← UNIFORM LANE LOAD

lane load

DESIGN SUMMARY

Maximum Bending =	2,867.692 k-ft	Maximum Shear =	117.246 k
Load Combination	+1.250D+1.750Lr+1.750L	Load Combination	+1.250D+1.750Lr+1.750L
Location of maximum on span	33.820 ft	Location of maximum on span	76.000 ft
Span # where maximum occurs	Span # 1	Span # where maximum occurs	Span # 1

STATE OF VERMONT
RONALD K. BELL
NO 6004
PROFESSIONAL ENGINEER

BELL ENGINEERING
CIVIL & ENVIRONMENTAL
17 ECHO COVE WAY
SPOFFORD, NEW HAMPSHIRE 03462
(603) 363-9966

PROJECT NAME/ LOCATION: BRF 010-(01)-(43)
SHEET #: 13 OF 22
CALCULATED BY: Ron Bell DATE: 3-14-14
CHECKED BY: DATE:
SCALE:

FROM ENERCALC M_F = 2,867.492 K-ft

$$M_u = (1.0) F_y S_{xp} = 36 \frac{KIPS}{in^2} \times \frac{1,317.61 \ in^3}{12 \ in/ft}$$

$$= 3952 \ K\text{-}ft$$

$M_u >>> M_F$ ∴ OK

STATE OF VERMONT
RONALD K BELL
NO 6994
PROFESSIONAL ENGINEER

CHECK DEFLECTION

PER AASHTO THE UNIFORM LANE LOAD IS NOT REQUIRED TO BE INCLUDED IN DEFLECTION CALCS AND ALL BEAMS ARE ASSUMED TO DEFLECT EQUALLY:

Elastic Modulus 29,000.0 ksi
Span #1 Span Length = 76.0 ft Area = 90.50 in^2 Moment of Inertia = 21,408.6 in^4

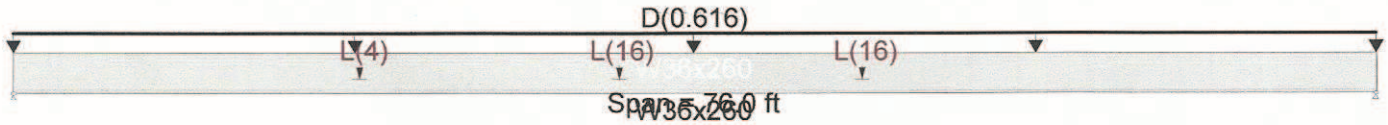

Applied Loads Service loads entered. Load Factors will be applied for calculations.

Beam self weight calculated and added to loads
Load(s) for Span Number 1
Point Load : L = 4.0 k @ 19.330 ft
Point Load : L = 16.0 k @ 33.770 ft
Uniform Load : D = 0.6160 k/ft, Tributary Width = 1.0 ft
Point Load : L = 16.0 k @ 47.330 ft

UNIFORM LANE LOAD NOT INCLUDED

DESIGN SUMMARY

Maximum Bending =	1,506.324 k-ft	Maximum Shear =	60.919 k
Load Combination	+1.250D+1.750Lr+1.750L	Load Combination	+1.250D+1.750Lr+1.750L
Location of maximum on span	33.820 ft	Location of maximum on span	76.000 ft
Span # where maximum occurs	Span # 1	Span # where maximum occurs	Span # 1

Maximum Deflection

Max Downward L+Lr+S Deflection	0.851 in
Max Upward L+Lr+S Deflection	0.000 in
Max Downward Total Deflection	1.602 in
Max Upward Total Deflection	0.000 in

76 / 12 = 912

912 / 0.851 = 1071 > 800 OK

BELL ENGINEERING
CIVIL & ENVIRONMENTAL
17 ECHO COVE WAY-SPOFFORD, NH 03462
(603) 363-9966

Project Title: ~~144-2126~~ B&RF 010-(1)(43)
Engineer: Ron Bell
Project Descr:
Project ID: 14/22

Printed: 25 FEB 2014, 9:15AM

General Section Property Calculator

File = c:\Users\Ron\DOCUME~1\ENERCA~1\RT9SEC~1.EC6
ENERCALC, INC. 1983-2013, Build:6.13.8.31, Ver:6.13.12.31

Lic. # : KW-06009396 Licensee : Bell Engineering

Description : 36X260 WITH 1X14 PLATE ON BOT FLANGE

Final Section Properties

Total Area	:	90.50 in^2
Calculated final C.G. distance from Datum :		
X cg Dist.	:	0.0 in
Y cg Dist.	:	-2.882 in
Edge Distances from CG. :		
+X	:	8.275 in
-X	:	-8.275 in
+Y	:	21.012 in
-Y	:	-16.248 in
Ixx =	:	21,408.6 in^4
Iyy =	:	1,318.67 in^4
Sxx : - Y	:	1,317.61 in^3
Sxx : +Y	:	1,018.87 in^3
Syy : - X	:	159.355 in^3
Syy : +X	:	159.355 in^3
r xx	:	15.380 in
r yy	:	3.817 in

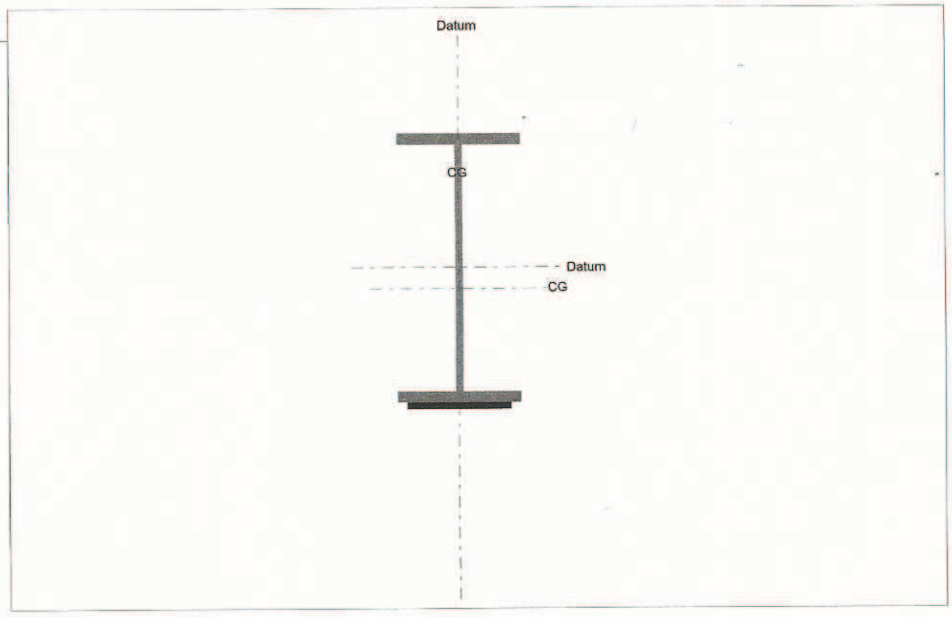

General Shapes

Rect : 1 Height = 1.000 in Width = 14.000 in Rotation = 0 dec CCW

Area =	14.000 in^2	Xcg =	0.000 in	Ixx =	1.167 in^4	Sxx =	2.333 in^3	Rxx =	0.289 in
		Ycg =	-18.630 in	Iyy =	228.667 in^4	Syy =	32.667 in^3	Ryy =	4.041 in

Steel Shapes

W36x260 : 1 Ixx = 17,300.000 in^4 Rotation = 0 dec CCW

Area =	76.500 in^2	Iyy =	1,090.000 in^4	Xcg =	0.000 in
Height	36.260 in	Sxx =	954.220 in^3	Ycg =	0.000 in
Width	16.550 in	Syy =	131.722 in^3		

$Z_x = 1,515.0 \text{ in}^3$

STATE OF VERMONT
RONALD K BELL
NO 6694
PROFESSIONAL ENGINEER

BELL ENGINEERING
CIVIL & ENVIRONMENTAL
17 ECHO COVE WAY
SPOFFORD, NEW HAMPSHIRE 03462
(603) 363-9966

PROJECT NAME/ LOCATION: BRF 010-01 (43)
SHEET #: 15 OF 22
CALCULATED BY: Ron Bell DATE: 3-11-14
CHECKED BY: DATE:
SCALE:

SUBSTRUCTURE DESIGN

2 TRUCKS = 144 KIPS × 1.75 × 1.33 = 335 KIPS
DECK = 27' × (7/12) (150 #/ft³) (1.25) × 76' = 224 KIPS
BEAMS + GUARD RAIL = 90 KIPS (1.25) = 113 KIPS
} 672 KIPS

FOOTING + STEM WALL = (2×4) + (3×1) (150) (26.83') × 1.25 = 55 KIPS

$$q_u = \frac{672 \text{ KIPS}}{2 \text{ SIDES}} + 55 \text{ KIPS} = 391 \text{ KIPS/SIDE}$$

$$q_u = \text{FACTORED LOAD}/ft^2 = \frac{391 \text{ KIPS}}{4' \times 26.83'} = 3.643 \text{ KIPS}/ft^2$$

FROM REVIEW OF BORING SHOWING N=4 FOR GRAVEL SAND FROM TABLE C10.6.2.6.1-1 ALLOWABLE PRESUMPTIVE BEARING CAPACITY OF SOIL = 10 KSK

FOR FOUNDATION RESISTANCE FACTOR = 0.45

10 KSF × 0.45 = 4.5 KSF

4.5 KSF > 3.643 KSF OK

STATE OF VERMONT
RONALD K BELL
NO 6694
PROFESSIONAL ENGINEER

BELL ENGINEERING
CIVIL & ENVIRONMENTAL
17 ECHO COVE WAY
SPOFFORD, NEW HAMPSHIRE 03462
(603) 363-9966

PROJECT NAME/ LOCATION: BRF 010-01 (43)
SHEET #: 10 OF 22
CALCULATED BY: Ron Bell DATE: 3-11-14
CHECKED BY: DATE:
SCALE:

CHECK REINFORCEMENT IN FOOTING

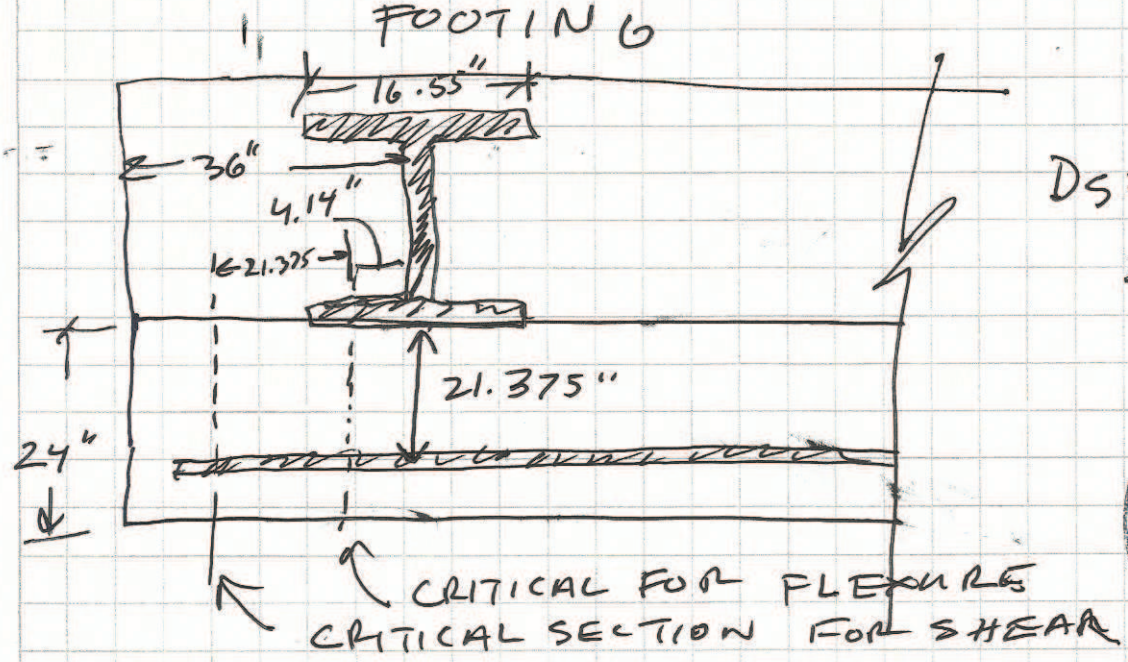

$D_s = 24 - 3 + 6/8/2$

$= 21.375''$

STATE OF VERMONT
RONALD K BELL
NO 6694
PROFESSIONAL ENGINEER

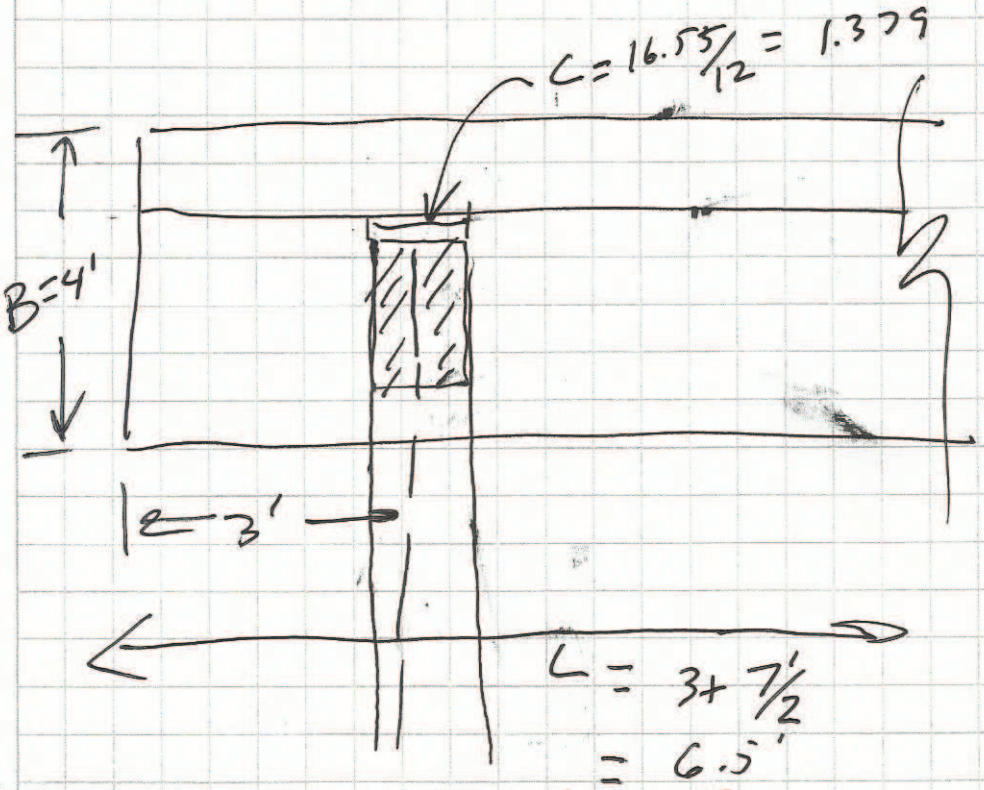

DISTANCE FROM EDGE OF FOOTING TO CRITICAL SECTION FOR FLEXURAL SHEAR:

$x = \frac{L}{2} - \frac{C}{2} - d_s$

$= \frac{6.5}{2} - \frac{1.379}{2} - \frac{21.375}{12}$

$= 0.779'$

$V_u = q_u B x = (3.643)(4)(0.779) = 11.352$ KIPS

factored

BELL ENGINEERING
CIVIL & ENVIRONMENTAL
17 ECHO COVE WAY
SPOFFORD, NEW HAMPSHIRE 03462
(603) 363-9966

PROJECT NAME/ LOCATION: BRF 010-01 (43)
SHEET #: 17 OF
CALCULATED BY: Ron Bell DATE: 3-11-14
CHECKED BY: DATE:
SCALE:

STATE OF VERMONT RONALD K BELL NO 8694 PROFESSIONAL ENGINEER

SHEAR CAPACITY OF THE FOOTING IS GIVEN BY ACI 318 EQ. 11-3 as:

$$\phi V_c = 2\phi b d \lambda \sqrt{f'_c}$$

$$= \frac{(2)(.75)(48)(21.375)(1.0)\sqrt{3500}}{1000 \text{ \#/Kip}}$$

$$= 91.048 \text{ KIPS} >> V_u \text{ OK}$$

CHECK PUNCHING SHEAR

From ACI 318 EQ. 11-37

$$\phi V_c = 4\phi d b_o \lambda \sqrt{f'_c}$$

The net factored pressure on the footing is:

$$3.643 \text{ KIPS/ft}^2$$

The length of the critical perimeter is;

$$b_o = 4(c+d)$$

$$= \frac{4(16.55+21.375)}{12} = 12.642'$$

V_u @ critical perimeter $= V_u = P_u - q_u(c+d)^2$

$$= 391 - \left[3.643\left(\frac{16.55+21.375}{12}\right)^2\right]$$

$$= 359.613 \text{ KIPS}$$

$$\phi V_c = \frac{(4)(.75)(21.375)(12642 \times 12)(1.0)\sqrt{3500}}{1000} = 575.517 \text{ KIPS}$$

$> V_u$ OK

BELL ENGINEERING
CIVIL & ENVIRONMENTAL
17 ECHO COVE WAY
SPOFFORD, NEW HAMPSHIRE 03462
(603) 363-9966

PROJECT NAME/ LOCATION: BRF-010-01 (43)
SHEET #: 18 OF 22
CALCULATED BY: Ron Bell DATE: 3-11-14
CHECKED BY: DATE:
SCALE:

CHECK FLEXURE REINFORCEMENT

$$M_u = \frac{q_u B \left(\frac{L}{2} - \frac{c}{2}\right)^2}{2}$$

$$= \frac{(3.541)(4)\left(\frac{7}{2} - \frac{1.38}{2}\right)^2}{2}$$

$$= 55.920 \text{ KIP-FT}$$

STATE OF VERMONT
RONALD K BELL
NO 6694
PROFESSIONAL ENGINEER

$$\phi \rho_F = \frac{0.85 f'_c \left(1 - \sqrt{1 - \frac{M_u}{0.383\, b d^2 f'_c}}\right)}{f_y}$$

$\phi = 0.90$ (5.5.4.2)

$$\rho_F = \frac{(0.85)(4)\left(1 - \sqrt{1 - \frac{55.290 \text{ ft-kip} \times 12 \times 1000}{(0.383)(36)(21.375)^2 (3500)}}\right)}{60 \times 0.90}$$

$$= .001$$

#6 bars @ 9" o.c. longitudinally provided:

$$\rho = \frac{\pi \left[\left(\frac{6}{8}\right)/2\right]^2 \times \frac{12}{9}}{12 \times 21.375} = .002 >> .001 \text{ OK}$$

BELL ENGINEERING
CIVIL & ENVIRONMENTAL
17 ECHO COVE WAY
SPOFFORD, NEW HAMPSHIRE 03462
(603) 363-9966

PROJECT NAME/ LOCATION: BRF 010-01 (43)
SHEET #: 19 OF 22
CALCULATED BY: Ron Bell DATE: 3-11-14
CHECKED BY: DATE:
SCALE:

STATE OF VERMONT RONALD K BELL NO 6084 PROFESSIONAL ENGINEER

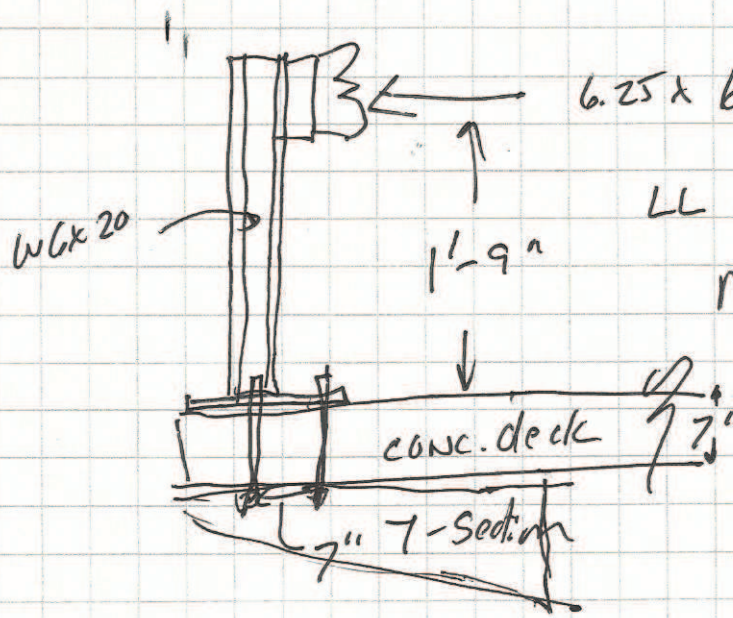

6.25 x 600#/ft = 3750#

LL factor for Strength I = 1.75

Max Bending Stress Ratio from ENVERCALC = 0.204 >> 1.0 OK

Check Bolts: (4) 7/8 A490 (Group B)

Resistance factors: Shear = 0.50
Tension = 0.75

From AISC Table 7-1 + 7-2

Allowable single shear = 37.9 KIPS
Allowable tension = 51.0 KIPS

$\phi F_y = (0.75)(51.0) = 38.25$ KIPS

$\phi V_s = (0.5)(37.9) = 18.950$ KIPS

BELL ENGINEERING
CIVIL & ENVIRONMENTAL
17 ECHO COVE WAY
SPOFFORD, NEW HAMPSHIRE 03462
(603) 363-9966

PROJECT NAME/ LOCATION: BRF 010-01 (Y3)
SHEET #: 20 OF 22
CALCULATED BY: Ron Bell DATE: 3-11-14
CHECKED BY: DATE:
SCALE:

STATE OF VERMONT RONALD K BELL NO 6694 PROFESSIONAL ENGINEER

1. Tension on Inside Bolts

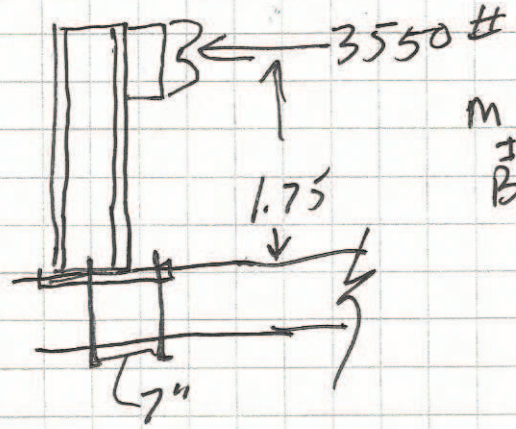

$M_{\text{INSIDE Bolt}} = (1.75)(3750\#)(1.75') - 7/12 R$

$R = 14687.50\#/2 \text{ bolts}$

$= 9843.75\# \text{ bolt}$

The factored tension < the allowable 38.25 KIPS/bolt ∴ OK

Shear on Bolts

$V_F = \frac{(1.75)(3750\#)}{4 \text{ bolts}} = 1.640 \text{ KIPS} << 18.95 \text{ OK}$

BELL ENGINEERING
CIVIL & ENVIRONMENTAL
17 ECHO COVE WAY-SPOFFORD, NH 03462
(603) 363-9966

Project Title: MARLBORO BRF 010-1(43)
Engineer: RON BELL
Project Descr: GUARD RAIL POSTS

Project ID: 010-01 (43)

21/22

Printed: 10 MAR 2014, 1:25PM

Steel Column

File = c:\Users\Ron\DOCUME~1\ENERCA~1\RTGUAR~1.EC6
ENERCALC, INC. 1983-2013, Build:6.13.8.31, Ver:6.13.12.31

Lic. # : KW-06009396 Licensee : Bell Engineering

Description : W6x20 posts @ 6.25' o.c.

Code References

Calculations per AISC 360-05, IBC 2006, CBC 2007, ASCE 7-05
Load Combinations Used : ASCE 7-05

General Information

Steel Section Name :	W6x20	Overall Column Height	1.750 ft
Analysis Method :	Load Resistance Factor	Top & Bottom Fixity	Top Free, Bottom Fixed
Steel Stress Grade	A-992, High Strength, Low Alloy, Fy =	Brace condition for deflection (buckling) along columns :	
Fy : Steel Yield	50.0 ksi	X-X (width) axis :	
E : Elastic Bending Modulus	29,000.0 ksi	Fully braced against buckling along X-X Axis	
Load Combination :	ASCE 7-05	Y-Y (depth) axis :	
		Fully braced against buckling along Y-Y Axis	

Applied Loads

Service loads entered. Load Factors will be applied for calculations.

Column self weight included : 34.968 lbs * Dead Load Factor
BENDING LOADS . . .
Lat. Point Load at 1.750 ft creating Mx-x, L = 3.750 k

DESIGN SUMMARY

Bending & Shear Check Results

PASS Max. Axial+Bending Stress Ratio = 0.2042 : 1

Load Combination	+1.750L
Location of max.above base	0.0 ft
At maximum location values are . . .	
Pu	0.0 k
0.9 * Pn	264.150 k
Mu-x	-11.484 k-ft
0.9 * Mn-x :	56.250 k-ft
Mu-y	0.0 k-ft
0.9 * Mn-y :	25.20 k-ft

PASS Maximum Shear Stress Ratio = 0.1357 : 1

Load Combination	+1.750L
Location of max.above base	0.0 ft
At maximum location values are . . .	
Vu : Applied	6.563 k
Vn * Phi : Allowable	48.360 k

Maximum SERVICE Load Reactions . .

Top along X-X	0.0 k
Bottom along X-X	0.0 k
Top along Y-Y	0.0 k
Bottom along Y-Y	3.750 k

Maximum SERVICE Load Deflections . . .

Along Y-Y 0.009593 in at 1.750 ft above base
for load combination : L Only

Along X-X 0.0 in at 0.0 ft above base
for load combination :

Maximum Deflections for Load Combinations - Unfactored Loads

Load Combination	Max. X-X Deflection		Distance		Max. Y-Y Deflection		Distance	
L Only	0.0000	in	0.000	ft	0.010	in	1.750	ft
D+L	0.0000	in	0.000	ft	0.009	in	1.738	ft

Steel Section Properties : W6x20

Depth	=	6.200	in	I xx	=	41.40	in^4	J	=	0.240	in^4
Web Thick	=	0.260	in	S xx	=	13.40	in^3	Cw	=	113.00	in^6
Flange Width	=	6.020	in	R xx	=	2.660	in				
Flange Thick	=	0.365	in	Zx	=	15.000	in^3				
Area	=	5.870	in^2	I yy	=	13.300	in^4				
Weight	=	19.981	plf	S yy	=	4.410	in^3	Wno	=	8.780	in^2
Kdesign	=	0.615	in	R yy	=	1.500	in	Sw	=	4.820	in^4
K1	=	0.563	in	Zy	=	6.720	in^3	Qf	=	3.070	in^3
rts	=	1.700	in	rT	=	1.640	in	Qw	=	7.380	in^3
Ycg	=	0.000	in								

STATE OF VERMONT
RONALD K BELL
NO 6694
PROFESSIONAL ENGINEER

BELL ENGINEERING
CIVIL & ENVIRONMENTAL
17 ECHO COVE WAY-SPOFFORD, NH 03462
(603) 363-9966

Project Title: MARLBORO BRF 010-1(43)
Engineer: RON BELL
Project Descr: GUARD RAIL POSTS

Project ID: 010-01 (43)

22/22

Printed: 10 MAR 2014, 1:25PM

Steel Column

File = c:\Users\Ron\DOCUME~1\ENERCA~1\RTGUAR~1.EC6
ENERCALC, INC. 1983-2013, Build:6.13.8.31, Ver:6.13.12.31

Lic. # : KW-06009396

Licensee : Bell Engineering

Description : W6x20 posts @ 6.25' o.c.

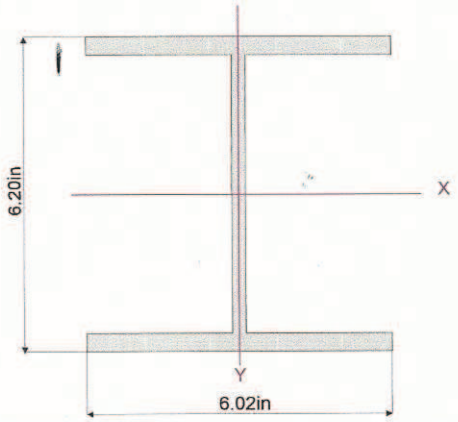

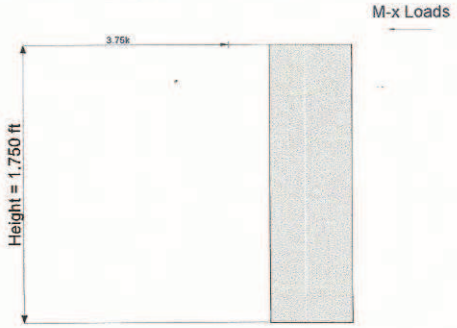

Loads are total entered value. Arrows do not reflect absolute direction.

STATE OF VERMONT
RONALD K BELL
NO 6594
PROFESSIONAL ENGINEER

CODE

Equations used not in LRFD (3 supplemental sheets)

11

11.1.3.2 — For prestressed members, sections located less than a distance $h/2$ from face of support shall be permitted to be designed for V_u computed at a distance $h/2$.

11.1.4 — For deep beams, brackets and corbels, walls, and slabs and footings, the special provisions of 11.7 through 11.11 shall apply.

11.2 — Shear strength provided by concrete for nonprestressed members

11.2.1 — V_c shall be computed by provisions of 11.2.1.1 through 11.2.1.3, unless a more detailed calculation is made in accordance with 11.2.2. Throughout this chapter, except in 11.6, λ shall be as defined in 8.6.1.

11.2.1.1 — For members subject to shear and flexure only,

$$V_c = 2\lambda\sqrt{f'_c}\, b_w d \qquad (11\text{-}3)$$

flexural shear

11.2.1.2 — For members subject to axial compression,

$$V_c = 2\left(1 + \frac{N_u}{2000A_g}\right)\lambda\sqrt{f'_c}\, b_w d \qquad (11\text{-}4)$$

Quantity N_u/A_g shall be expressed in psi.

COMMENTARY

members supported by bearing at the bottom of member, such as shown in Fig. R11.1.3.1(c); and members framing monolithically into another member illustrated in Fig. R11.1.3.1(d).

Support conditions where this provision should not applied include: (1) Members framing into a support member in tension, such as shown in Fig. R11.1.3.1(e). I this case, the critical section for shear should be taken at face of the support. Shear within the connection should a be investigated and special corner reinforcement should provided. (2) Members for which loads are not applied at near the top of the member. This is the condition referred to Fig. 11.1.3.1(b). For such cases, the critical section is taken the face of the support. Loads acting near the support sho be transferred across the inclined crack extending upw from the support face. The shear force acting on the crit section should include all loads applied below the poten inclined crack. (3) Members loaded such that the shear sections between the support and a distance d from support differs radically from the shear at distance d. T commonly occurs in brackets and in beams where a conc trated load is located close to the support, as shown Fig. R11.1.3.1(f) or in footings supported on piles. In t case, the shear at the face of the support should be used.

R11.1.3.2 — Because d frequently varies in prestress members, the location of the critical section has arbitrar been taken as $h/2$ from the face of the support.

R11.2 — Shear strength provided by concrete for nonprestressed members

R11.2.1.1 — See R11.2.2.1.

R11.2.1.2 and R11.2.1.3 — See R11.2.2.2.

American Concrete Institute Copyrighted Material—www.concrete.org

CODE

.11.1.3 — For square or rectangular columns, entrated loads, or reaction areas, the critical ons with four straight sides shall be permitted.

1.2 — The design of a slab or footing for two-way n is based on Eq. (11-1) and (11-2). V_c shall be puted in accordance with 11.11.2.1, 11.11.2.2, or 1.3.1. V_s shall be computed in accordance with 1.3. For slabs with shearheads, V_n shall be in rdance with 11.11.4. When moment is transferred een a slab and a column, 11.11.7 shall apply.

.11.2.1 — For nonprestressed slabs and footings, hall be the smallest of (a), (b), and (c):

$$V_c = \left(2 + \frac{4}{\beta}\right)\lambda\sqrt{f'_c}\, b_o d \qquad (11\text{-}31)$$

re β is the ratio of long side to short side of the mn, concentrated load or reaction area;

$$V_c = \left(\frac{\alpha_s d}{b_o} + 2\right)\lambda\sqrt{f'_c}\, b_o d \qquad (11\text{-}32)$$

re α_s is 40 for interior columns, 30 for edge mns, 20 for corner columns; and

$$V_c = 4\lambda\sqrt{f'_c}\, b_o d \qquad (11\text{-}33)$$

for punching shear

.11.2.2 — At columns of two-way prestressed s and footings that meet the requirements of .3

$$V_c = (\beta_p\lambda\sqrt{f'_c} + 0.3 f_{pc}) b_o d + V_p \qquad (11\text{-}34)$$

re β_p is the smaller of 3.5 and $(\alpha_s d/b_o + 1.5)$, α_s is or interior columns, 30 for edge columns, and 20 corner columns, b_o is perimeter of critical section ned in 11.11.1.2, f_{pc} is taken as the average value pc for the two directions, and V_p is the vertical ponent of all effective prestress forces crossing critical section. V_c shall be permitted to be puted by Eq. (11-34) if the following are satisfied; erwise, 11.11.2.1 shall apply:

COMMENTARY

For edge columns at points where the slab cantilevers beyond the column, the critical perimeter will either be three-sided or four-sided.

R11.11.2.1 — For square columns, the shear stress due to ultimate loads in slabs subjected to bending in two directions is limited to $4\lambda\sqrt{f'_c}$. However, tests[11.61] have indicated that the value of $4\lambda\sqrt{f'_c}$ is unconservative when the ratio β of the lengths of the long and short sides of a rectangular column or loaded area is larger than 2.0. In such cases, the actual shear stress on the critical section at punching shear failure varies from a maximum of about $4\lambda\sqrt{f'_c}$ around the corners of the column or loaded area, down to $2\lambda\sqrt{f'_c}$ or less along the long sides between the two end sections. Other tests[11.62] indicate that v_c decreases as the ratio b_o/d increases. Equations (11-31) and (11-32) were developed to account for these two effects. The words "interior," "edge," and "corner columns" in 11.11.2.1(b) refer to critical sections with four, three, and two sides, respectively.

For shapes other than rectangular, β is taken to be the ratio of the longest overall dimension of the effective loaded area to the largest overall perpendicular dimension of the effective loaded area, as illustrated for an L-shaped reaction area in Fig. R11.11.2. The effective loaded area is that area totally enclosing the actual loaded area, for which the perimeter is a minimum.

R11.11.2.2 — For prestressed slabs and footings, a modified form of Code Eq. (11-31) and (11-34) is specified for two-way action shear strength. Research[11.63,11.64] indicates that the shear strength of two-way prestressed slabs around interior columns is conservatively predicted by Eq. (11-34). V_c from Eq. (11-34) corresponds to a diagonal tension failure of the concrete initiating at the critical section defined in 11.11.1.2. The mode of failure differs from a punching shear failure of the concrete compression zone around the perimeter of the loaded area predicted by Eq. (11-31). Consequently, the term β does not enter into Eq. (11-34). Values for $\sqrt{f'_c}$ and f_{pc} are restricted in design due to limited test data available for higher values. When computing f_{pc}, loss of prestress due to restraint of the slab by shear walls and other structural elements should be taken into account.

11

American Concrete Institute Copyrighted Material—www.concrete.org

CODE

COMMENTARY

Moment redistribution as permitted by 8.4 is not intended for moments in two-way slab systems that are analyzed using the pattern loadings given in 13.7.6.3 or for use where approximate values of bending moments are used. For the Direct Design Method, 10 percent modification is allowed by 13.6.7.

Before 2002, Section 8.4 specified the permissible redistribution percentage in terms of reinforcement indices. The 2002 Code specified the permissible redistribution percentage in terms of the net tensile strain in extreme tension steel at nominal strength, ε_t. See Reference 8.6 for a comparison of these moment redistribution provisions.

8

8.5 — Modulus of elasticity

8.5.1 — Modulus of elasticity, E_c, for concrete shall be permitted to be taken as $w_c^{1.5}33\sqrt{f'_c}$ (in psi) for values of w_c between 90 and 160 lb/ft^3. For normalweight concrete, E_c shall be permitted to be taken as $57{,}000\sqrt{f'_c}$.

8.5.2 — Modulus of elasticity, E_s, for nonprestressed reinforcement shall be permitted to be taken as 29,000,000 psi.

8.5.3 — Modulus of elasticity, E_p, for prestressing steel shall be determined by tests or reported by the manufacturer.

R8.5 — Modulus of elasticity

R8.5.1 — Studies leading to the expression for modulus of elasticity of concrete in 8.5.1 are summarized in Reference 8.7 where E_c was defined as the slope of the line drawn from a stress of zero to a compressive stress of $0.45f'_c$. The modulus of elasticity for concrete is sensitive to the modulus of elasticity of the aggregate and may differ from the specified value. Measured values range typically from 120 to 80 percent of the specified value. Methods for determining the modulus of elasticity for concrete are described in Reference 8.8.

8.6 — Lightweight concrete

8.6.1 — To account for the use of lightweight concrete, unless specifically noted otherwise, a modification factor λ appears as a multiplier of $\sqrt{f'_c}$ in all applicable equations and sections of this Code, where $\lambda = 0.85$ for sand-lightweight concrete and 0.75 for all-lightweight concrete. Linear interpolation between 0.75 and 0.85 shall be permitted, on the basis of volumetric fractions, when a portion of the lightweight fine aggregate is replaced with normalweight fine aggregate. Linear interpolation between 0.85 and 1.0 shall be permitted, on the basis of volumetric fractions, for concrete containing normalweight fine aggregate and a blend of lightweight and normalweight coarse aggregates. For normalweight concrete, $\lambda = 1.0$. If average splitting tensile strength of lightweight concrete, f_{ct}, is specified, $\lambda = f_{ct}/(6.7\sqrt{f'_c}) \leq 1.0$.

R8.6 — Lightweight concrete

R8.6.1 — Factor λ reflects the lower tensile strength of lightweight concrete, which can reduce shear strength, friction properties, splitting resistance, bond between concrete and reinforcement, and increase development length, compared with normalweight concrete of the same compressive strength.

Two alternative procedures are provided to determine λ. The first alternative is based on the assumption that the tensile strength of lightweight concrete is a fixed fraction of the tensile strength of normalweight concrete.[8.9] The multipliers are based on data from tests on many types of structural lightweight aggregate.

The second alternative is based on laboratory tests to determine the relationship between average splitting tensile strength f_{ct} and the specified compressive strength f'_c for the lightweight concrete being used. For normalweight concrete, the average splitting tensile strength f_{ct} is approximately equal to $6.7\sqrt{f'_c}$.[8.9,8.10]

American Concrete Institute Copyrighted Material—www.concrete.org