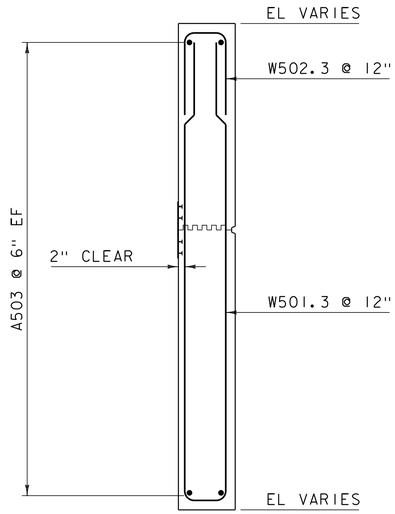

WINGWALL TYPICAL

SCALE 1/2" = 1'-0"

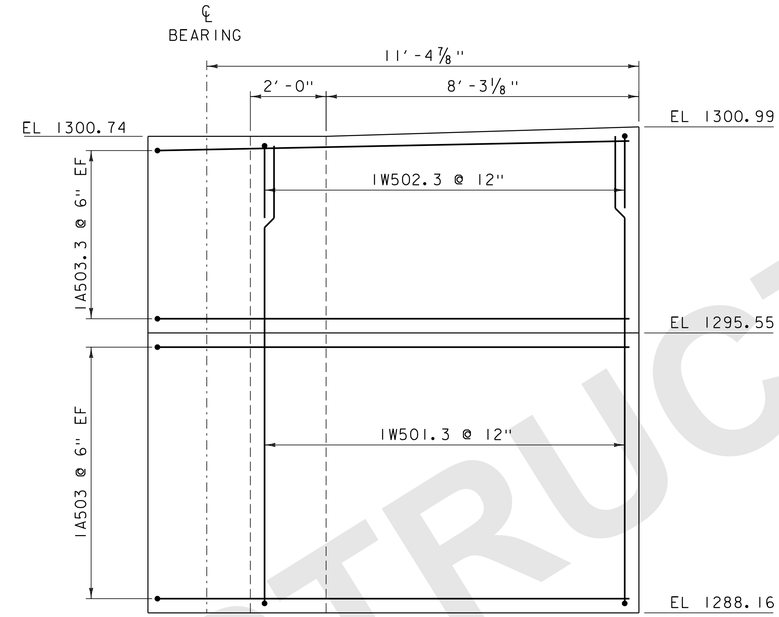

WINGWALL 1 ELEVATION

SCALE 1/2" = 1'-0"

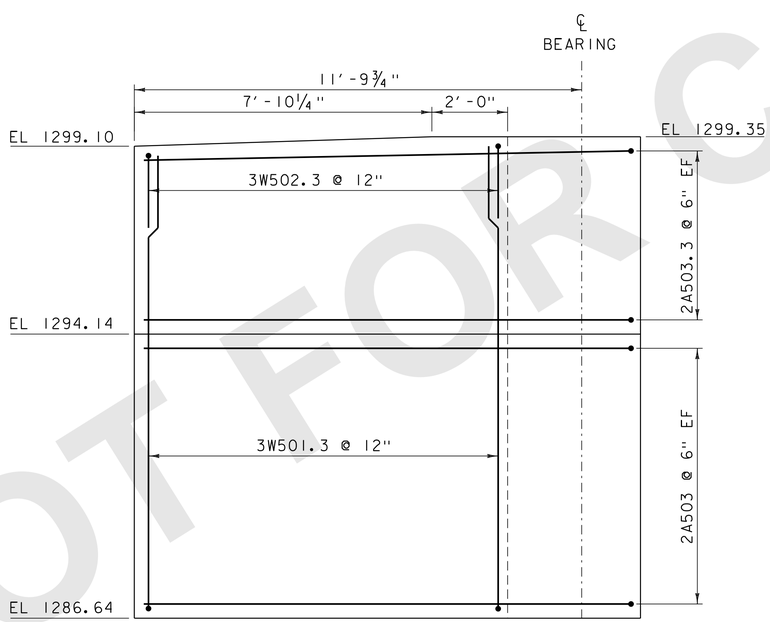

WINGWALL 3 ELEVATION

SCALE 1/2" = 1'-0"

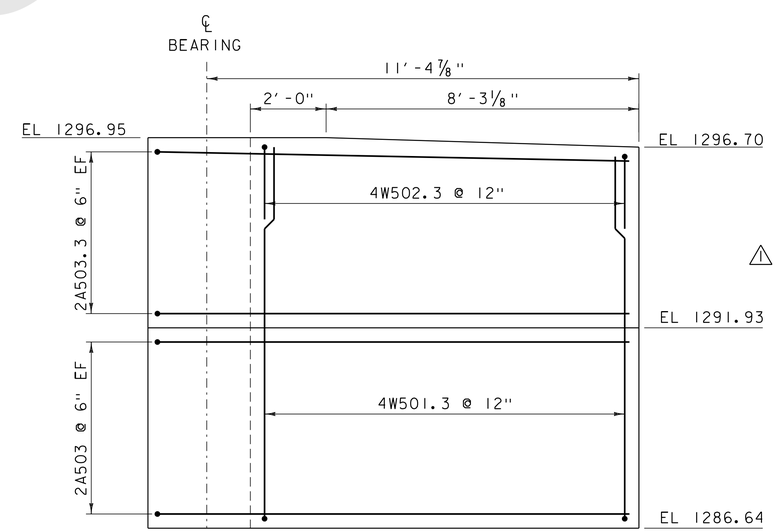

WINGWALL 4 ELEVATION

SCALE 1/2" = 1'-0"

△1 -SHEET REVISED 4/8/2014.
REPLACES SHEET 34 IN CONTRACT PLANS.

NOTE:

NF = NEAR FACE
FF = FAR FACE
EF = EACH FACE
3" CLEAR, UNLESS OTHERWISE SPECIFIED ON THE PLANS.
2'-2" BAR LAP UNLESS OTHERWISE SPECIFIED ON THE PLANS.

PROJECT NAME: MARLBORO	
PROJECT NUMBER: BRF 010-1(43)	
FILE NAME: s10414ww.dgn	PLOT DATE: 08-APR-2014
PROJECT LEADER: K. HIGGINS	DRAWN BY: J. SALVATORI
DESIGNED BY: R. KLINEFELTER	CHECKED BY: R. KLINEFELTER
WINGWALL DETAILS △1	SHEET 34 OF 50

NOT FOR CONSTRUCTION