STATE OF VERMONT
AGENCY OF TRANSPORTATION

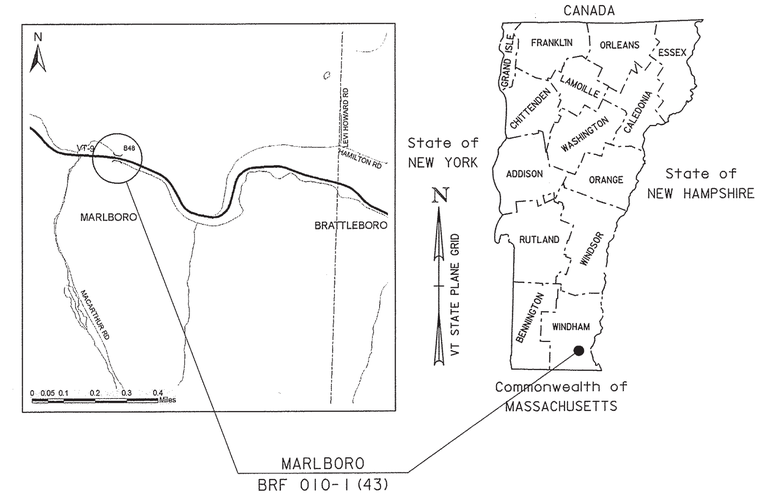

PROPOSED IMPROVEMENT
BRIDGE PROJECT

TOWN OF MARLBORO
COUNTY OF WINDHAM

ROUTE NO : VT 9, PRINCIPAL ARTERIAL-NHS BRIDGE NO : 48

PROJECT LOCATION: BEGINNING ON VT RT 9 APPROXIMATELY 0.870 MILES WESTERLY OF THE MARLBORO AND BRATTLEBORO TOWN LINE AND EXTENDING EASTERLY ALONG VT RT 9 FOR 200 FEET.

PROJECT DESCRIPTION: REPLACEMENT OF EXISTING BRIDGE WITH RELATED ROADWAY APPROACH AND CHANNEL WORK.

LENGTH OF STRUCTURE: 81.55 FEET
LENGTH OF ROADWAY: 118.45 FEET
LENGTH OF PROJECT: 200.00 FEET

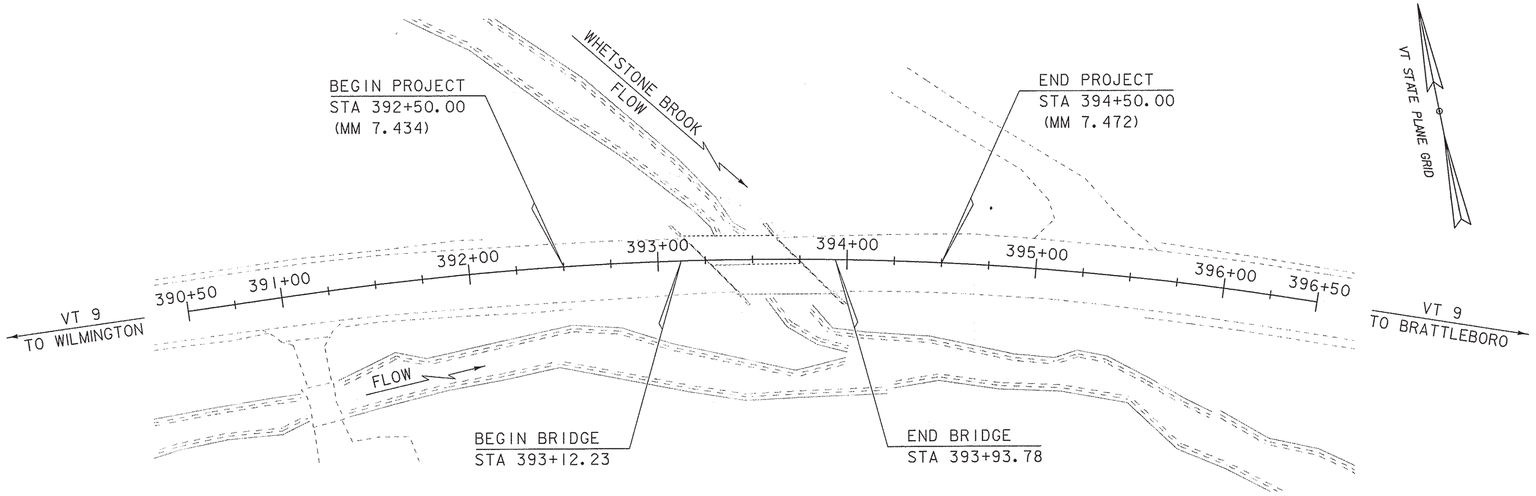

QUALITY ASSURANCE PROGRAM: LEVEL 2

CONVENTIONAL SYMBOLS

COUNTY LINE
TOWN LINE
LIMITS OF ACCESS
POINT OF ACCESS
FENCE LINE
STONE WALL
TRAVELED WAY
GUARD RAIL
RAILROAD
SURVEY LINE
CULVERT
POWER POLE
TELEPHONE POLE
TREES
CONTROL OF ACCESS
PROPERTY LINE
R.O.W. TAKING LINE
SLOPE RIGHTS
TOP OF CUT
TOE OF SLOPE

SURVEYED BY : R. GILMAN
SURVEYED DATE : 6/16/2011

DATUM
VERTICAL NAVD 88
HORIZONTAL NAD 83 (96)

SCALE 1" = 40'-0"
40 0 40

THESE PLANS ARE SUBJECT TO SUCH ENGINEERING CHANGES AS MAY BE REQUIRED BY THE FEDERAL HIGHWAY ADMINISTRATION OR THE DIRECTOR OF PROGRAM DEVELOPMENT.

CONSTRUCTION IS TO BE CARRIED ON IN ACCORDANCE WITH THESE PLANS AND THE STANDARD SPECIFICATIONS FOR CONSTRUCTION DATED 2011, AS APPROVED BY THE FEDERAL HIGHWAY ADMINISTRATION ON JULY 20, 2011 FOR USE ON THIS PROJECT, INCLUDING ALL SUBSEQUENT REVISIONS AND SUCH REVISED SPECIFICATIONS AND SPECIAL PROVISIONS AS ARE INCORPORATED IN THESE PLANS.

CONTRACT PLANS

REVISED 5-8-2014

DIRECTOR OF PROGRAM DEVELOPMENT
APPROVED [signature] DATE 8-27-13

PROJECT MANAGER : KRISTIN HIGGINS, P.E.

PROJECT NAME : MARLBORO
PROJECT NUMBER : BRF 010-1(43)

SHEET 1 OF 50 SHEETS

STATE OF VERMONT
AGENCY OF TRANSPORTATION

PRELIMINARY INFORMATION SHEET (BRIDGE)

Version 09.02.03

LRFD

INDEX OF SHEETS

PLAN SHEETS

1	TITLE SHEET
2	PRELIMINARY INFORMATION SHEET 1
3	GENERAL NOTES 6
4 - 5	QUANTITY SHEETS 1-2
6 - 7	TYPICAL SECTIONS 1-2 1
8	LEGEND
9	TIE SHEET
10	EXISTING CONDITIONS
11	LAYOUT SHEET
12	MAINLINE PROFILE
13	PHASE CONSTRUCTION DETAILS 1 1
14	BLANK 3
15	BLANK 3
16	BLANK 3
17	PROPOSED UTILITY LAYOUT
18	SIGNS AND PAVEMENT MARKINGS
19	TRAFFIC SIGN SUMMARY SHEET
20	RAIL LAYOUT SHEET 2
21	BORING LAYOUT SHEET
22 - 23	BORING LOGS 1-2
24	DECK REINFORCING PLAN 4
25	FRAMING PLAN & GIRDER ELEVATION 1
26	CAMBER & DEFLECTION 1
27	BEARING DETAILS 1
28	APPROACH SLAB DETAILS 4
29	ABUTMENT 1 6
30	BLANK 2
31	BLANK 2
32	ABUTMENT 2 6
33	REINFORCING STEEL SCHEDULE SHEET 6
34	WING WALL DETAILS 5
35	ROW LAYOUT
36	EPSC NARRATIVE
37	EPSC PLAN
38 - 39	EPSC DETAILS 1-2
40	BANKING DIAGRAM AND MATERIAL TRANSITION
41 - 45	MAINLINE SECTIONS 1-5
46 - 50	CHANNEL SECTIONS 1-5

STANDARDS LIST

C-10	CURBING	02-11-2008
E-100	CONSTRUCTION APPROACH SIGNS	01-02-2004
E-100A	SIDE ROAD CONSTRUCTION - APPROACH SIGNS	01-02-2004
E-101	CONSTRUCTION SIGN DETAILS	05-30-2003
E-102	CONSTRUCTION SIGN DETAILS	06-30-2003
E-102A	CONSTRUCTION SIGN DETAILS	05-01-2004
E-106	TRAFFIC CONTROL- MISCELLANEOUS DETAILS	03-01-2004
E-107	DELINEATION, BARRICADES AND DETOURS FOR CONSTRUCTION AREAS	06-30-2003
E-107A	BREAKAWAY BARRICADE DETAILS	06-08-2009
E-108	CONSTRUCTION ZONE LONGITUDINAL DROP OFFS	06-08-2009
E-108A	CONSTRUCTION ZONE LONGITUDINAL DROP OFFS FOR PAVING	06-08-2009
E-110	MAJOR MAINTENANCE OPERATION LANE CLOSURE	08-08-1995
E-121	STANDARD SIGN PLACEMENT - CONVENTIONAL ROAD	08-08-1995
E-134	BRIDGE NUMBER PLAQUE	08-08-1995
E-138	MILE MARKER DETAILS - STATE & TOWN HIGHWAYS	05-30-2003
E-140	REGULATORY SIGN DETAILS	08-30-1996
E-164	SQUARE STEEL SIGN POST	06-08-2009
G-1	STEEL BEAM GUARDRAIL DETAILS (POST, DELINEATOR, TYPICALS)	01-03-2000
G-4	PLANK RAIL, GUIDE POSTS, MARKER POSTS	06-01-1994
G-19	GENERIC GRADING PLANS FOR GUARDRAIL END TERMINALS	11-15-2002
S-360A	BRIDGE RAILING, GALVANIZED 2 RAIL BOX BEAM	04-23-2012
S-360B	GUARDRAIL APPROACH SECTION, GALVANIZED 2 RAIL BOX BEAM	04-23-2012
S-363	THRIE BEAM TO STANDARD STEEL BEAM TRANSITION SECTION	04-23-2012

1 -REVISED 4/8/2014
2 -REVISED 4/25/2014
3 -REVISED 4/29/2014
4 -REVISED 5/2/2014
5 -REVISED 5/6/2014
6 -REVISED 5/7/2014
7 -REVISED 5/8/2014

REPLACES SHEET 2 IN CONTRACT PLANS

STRUCTURES DETAILS

SD-501.00	CONCRETE DETAILS AND NOTES	04-07-2010
SD-502.00	CONCRETE DETAILS AND NOTES	05-04-2010
SD-516.10	BRIDGE JOINT ASPHALTIC PLUG	04-07-2010
SD-601.00	STRUCTURAL STEEL DETAILS & NOTES	05-04-2010
SD-602.00	STRUCTURAL STEEL PLATE GIRDER DETAILS AND NOTES	04-02-2011

AS BUILT "REBAR" DETAIL

LEVEL I	LEVEL II	LEVEL III
TYPE:	TYPE:	TYPE:
GRADE:	GRADE:	GRADE:

TRAFFIC DATA

YEAR	ADT	DHV	% D	% T	ADTT
2014	5300	730	52	11.1	590
2034	5600	770	52	15.5	870

20 year ESAL for flexible pavement from 2014 to 2034 : 3994000
40 year ESAL for flexible pavement from 2014 to 2054 : 8745000
Design Speed : 50 mph

FINAL HYDRAULIC REPORT

HYDROLOGIC DATA

Date: August 2013

DRAINAGE AREA : 3.3 sq. mi.
CHARACTER OF TERRAIN : Mostly forested, rural, mountainous, ponds
STREAM CHARACTERISTICS : Sinuous
NATURE OF STREAMBED : Gravel and cobbles

PEAK FLOW DATA

Q 2.33 =	190 cfs	Q 50 =	590 cfs
Q 10 =	370 cfs	Q 100 =	680 cfs
Q 25 =	485 cfs	Q 500 =	880 cfs

DATE OF FLOOD OF RECORD: Unknown
ESTIMATED DISCHARGE: Unknown
WATER SURFACE ELEV.: Unknown
NATURAL STREAM VELOCITY : @ Q50 = 9.9 fps
ICE CONDITIONS : Moderate
DEBRIS: Moderate
DOES THE STREAM REACH MAXIMUM HIGHWATER ELEV. RAPIDLY? No
IS ORDINARY RISE RAPID? No
IS STAGE AFFECTED BY UPSTREAM OR DOWNSTREAM CONDITIONS? Maybe
IF YES, DESCRIBE: May be affected by confluence with downstream brook

WATERSHED STORAGE: 2%
HEADWATERS:
UNIFORM: X
IMMEDIATELY ABOVE SITE:

EXISTING STRUCTURE INFORMATION

STRUCTURE TYPE: Single span rolled beam bridge
YEAR BUILT: 1940, reconstructed in 1969
CLEAR SPAN(NORMAL TO STREAM): 36'
VERTICAL CLEARANCE ABOVE STREAMBED: 7'
WATERWAY OF FULL OPENING: 170 sq. ft.
DISPOSITION OF STRUCTURE: Replace
TYPE OF MATERIAL UNDER SUBSTRUCTURE: Unknown

WATER SURFACE ELEVATIONS AT:

Q2.33 =	1290.5'	VELOCITY =	6.2 fps
Q10 =	1291.5'	"	7.0 fps
Q25 =	1291.9'	"	7.8 fps
Q50 =	1292.2'	"	8.6 fps
Q100 =	1292.5'	"	9.3 fps

LONG TERM STREAMBED CHANGES: None noted

IS THE ROADWAY OVERTOPPED BELOW Q100: No
FREQUENCY:
RELIEF ELEVATION: 1294.0'
DISCHARGE OVER ROAD @Q100: N/A

UPSTREAM STRUCTURE

TOWN: Marlboro
DISTANCE: 5000'
HIGHWAY # : TH 20
STRUCTURE #: BR 11
CLEAR SPAN:
CLEAR HEIGHT:
YEAR BUILT: 1945
FULL WATERWAY:
STRUCTURE TYPE: Timber

DOWNSTREAM STRUCTURE

TOWN: Marlboro
DISTANCE: 80'
HIGHWAY # :
STRUCTURE #:
CLEAR SPAN:
CLEAR HEIGHT:
YEAR BUILT:
FULL WATERWAY:
STRUCTURE TYPE: Confluence with unnamed stream

LRFR LOAD RATING FACTORS

LOADING LEVELS	TRUCK						
	H-20	HL-93	3S2	6 AXLE	3A. STR.	4A. STR.	5A. SEMI
TONNAGE	20	36	36	66	30	34.5	38
INVENTORY	2.96	1.43					
POSTING							
OPERATING	3.84	1.85	2.92	1.91	2.69	2.4	2.54
COMMENTS:							

PILE DRIVING AND TESTING REQUIREMENTS

1. NOMINAL PILE DRIVING CAPACITY — Rndr: ---
2. PILE TEST RESISTANCE FACTOR — ϕ: ---
3. MAXIMUM PILE TIP ELEVATION — SEE GEN. NOTES
4. ALL PILES WILL BE SET IN PRE-EXCAVATED HOLES INTO BEDROCK. SEE GENERAL NOTES FOR ADDITIONAL INFORMATION.

PROPOSED STRUCTURE

STRUCTURE TYPE: Single span steel beam bridge

CLEAR SPAN(NORMAL TO STREAM): 60'
VERTICAL CLEARANCE ABOVE STREAMBED: 6.1'
WATERWAY OF FULL OPENING: 230 sq. ft.

WATER SURFACE ELEVATIONS AT:

Q2.33 =	1290.1'	VELOCITY=	5.8 fps
Q10 =	1291.0'	"	8.0 fps
Q25 =	1291.3'	"	9.4 fps
Q50 =	1291.6'	"	10.3 fps
Q100 =	1291.9'	"	10.8 fps

IS THE ROADWAY OVERTOPPED BELOW Q100: No
FREQUENCY:
RELIEF ELEVATION: 1294.0'
DISCHARGE OVER ROAD @Q100: N/A

AVERAGE LOW ELEVATION OF SUPERSTRUCTURE: 1293.3'
VERTICAL CLEARANCE: @ Q50 = 1.7'

SCOUR: Contraction scour @Q100 = 1.0' and @Q500 = 1.5'

REQUIRED CHANNEL PROTECTION: Stone Fill, Type III

PERMIT INFORMATION

		DEPTH OR ELEVATION:
AVERAGE DAILY FLOW:	7 cfs	
ORDINARY LOW WATER:	3 cfs	0.5'
ORDINARY HIGH WATER:	80 cfs	1.5'

TEMPORARY BRIDGE REQUIREMENTS

STRUCTURE TYPE: None
CLEAR SPAN (NORMAL TO STREAM):
VERTICAL CLEARANCE ABOVE STREAMBED:
WATERWAY AREA OF FULL OPENING:

ADDITIONAL INFORMATION

Confluence with unnamed stream 80' downstream of bridge

TRAFFIC MAINTENANCE NOTES

1. MAINTAIN ONE-WAY TRAFFIC ON THE EXISTING STRUCTURE.
2. INSTALL AND MAINTAIN TRAFFIC SIGNALS.
3. SIDEWALKS ARE NOT NECESSARY

DESIGN VALUES

1. DESIGN LIVE LOAD		HL-93
2. FUTURE PAVEMENT	d_p:	1.5 INCH
3. DESIGN SPAN	L:	80.00 FT
4. MIN. MID-SPAN POS. CAMBER @ RELEASE (PRESTRESSED UNITS)	Δ:	---
5. PRESTRESSING STRAND	f_y:	---
6. PRESTRESSED CONCRETE STRENGTH	f'_c:	---
7. PRESTRESSED CONCRETE RELEASE STRENGTH	f'_{ci}:	---
8. CONCRETE, HIGH PERFORMANCE CLASS AA	f'_c:	---
9. CONCRETE, HIGH PERFORMANCE CLASS A	f'_c:	4.0 KSI
10. CONCRETE, HIGH PERFORMANCE CLASS B	f'_c:	3.5 KSI
11. CONCRETE, CLASS C	f'_c:	---
12. REINFORCING STEEL	f_y:	60 KSI
13. STRUCTURAL STEEL AASHTO M270 (WEATHERING)	f_y:	50 KSI
14. SOIL UNIT WEIGHT	γ:	0.140 KCF
15. NOMINAL BEARING RESISTANCE OF SOIL	q_n:	---
16. SOIL BEARING RESISTANCE FACTOR (REFER TO AASHTO LRFD)	ϕ:	---
17. NOMINAL BEARING RESISTANCE OF ROCK	q_n:	70.0 KSF
18. ROCK BEARING RESISTANCE FACTOR (REFER TO AASHTO LRFD)	ϕ:	0.45
19. NOMINAL AXIAL PILE RESISTANCE	q_p:	---
20. PILE YIELD STRENGTH ASTM A572	f_y:	50 KSI
21. PILE SIZE		HP 10X57
22. EST. PILE LENGTH (AVERAGE)	L_p:	13 FT
23. PILE RESISTANCE FACTOR	ϕ:	---
24. LATERAL PILE DEFLECTION	Δ:	---
25. BASIC WIND SPEED	V_{3s}:	---
26. MINIMUM GROUND SNOW LOAD	p_g:	---
27. SEISMIC DATA PGA: ---	S_s:	---
	S_1:	---

PROJECT NAME: **MARLBORO**
PROJECT NUMBER: **BRF 010-1(43)**

FILE NAME: s10b414pi.dgn
PROJECT LEADER: K. HIGGINS
DESIGNED BY: R. KLINEFELTER
PRELIMINARY INFORMATION SHEET

PLOT DATE: 5/8/2014
DRAWN BY: R. KLINEFELTER
CHECKED BY: J. SALVATORI
SHEET 2 OF 50

GENERAL

1. ALL MATERIALS AND CONSTRUCTION SHALL CONFORM TO THE VERMONT AGENCY OF TRANSPORTATION 2011 STANDARD SPECIFICATIONS FOR CONSTRUCTION, THE 2012 AASHTO LRFD BRIDGE DESIGN SPECIFICATIONS, AND THEIR LATEST REVISIONS.

2. ALL DIMENSIONS ARE HORIZONTAL OR VERTICAL, AND ARE GIVEN AT 68 DEGREES FAHRENHEIT, UNLESS NOTED OTHERWISE.

3. NO ADJUSTMENTS TO THE BITUMINOUS WEARING SURFACE ON THE BRIDGE SHALL BE MADE TO ACCOUNT FOR THE DIFFERENCE BETWEEN DECK CAMBER AND THE THEORETICAL ROADWAY PROFILE. THE WEARING SURFACE SHALL BE SHIMMED TRANSVERSELY AS NECESSARY TO ACCOUNT FOR POTENTIAL DIFFERENTIAL CAMBER BETWEEN THE DECK CONSTRUCTION PHASES.

4. THERE ARE EXISTING AERIAL ELECTRIC AND TELEPHONE LINES THAT RUN PARALLEL TO VT 9 ON BOTH SIDES OF THE PROJECT THAT WILL BE MOVED TO THE NORTHERN SIDE. THE CONTRACTOR SHALL WORK AROUND AND PROTECT THESE LINES. SEE UTILITY SPECIAL PROVISIONS FOR ADDITIONAL INFORMATION AND REQUIREMENTS.

TRAFFIC CONTROL

5. THE CONTRACTOR SHALL BE RESPONSIBLE FOR SUPPLYING THE TRAFFIC CONTROL PACKAGE IDENTIFYING THE CONSTRUCTION PROJECT BEFORE, DURING, AND AFTER THE EXISTING TRAFFIC PATTERN IS ALTERED. THE CONTRACTOR SHALL SUBMIT A DETAILED TRAFFIC CONTROL PLAN TO THE RESIDENT ENGINEER FOR ALL STAGES OF CONSTRUCTION, FOR APPROVAL PER SUBSECTION 105.03. ALL COSTS SHALL BE INCLUDED IN ITEM 900.645, “SPECIAL PROVISION (TRAFFIC CONTROL, ALL-INCLUSIVE)”. SEE SPECIAL PROVISIONS FOR ADDITIONAL INFORMATION.

6. ALL SIGNING SHALL BE IN ACCORDANCE WITH THE LATEST EDITION OF THE MUTCD. WHERE CONFLICTS EXIST, THE MUTCD SHALL GOVERN. FOR ADDITIONAL SIGNING INSTRUCTIONS SEE THE E SERIES OF THE STANDARDS.

7. ALL ITEMS REQUIRED TO IMPLEMENT THE CONTRACTOR’S TRAFFIC CONTROL PLAN WILL NOT BE PAID FOR DIRECTLY BUT WILL BE CONSIDERED INCLUDED IN THE BID PRICE FOR ITEM 900.645, “SPECIAL PROVISION (TRAFFIC CONTROL, ALL-INCLUSIVE)”.

8. AT LEAST ONE PORTABLE CHANGEABLE MESSAGE SIGN (PCMS) SHALL BE POSITIONED IN ADVANCE OF EACH APPROACH TO THE WORK ZONE ADVISING OF THE ACTIVITY AHEAD.

EARTHWORK

9. REMOVAL OF THE EXISTING STRUCTURE SHALL BE PAID FOR UNDER ITEM 529.15, "REMOVAL OF STRUCTURE". THIS WORK SHALL INCLUDE REMOVAL OF ANY PORTIONS OF THE EXISTING ABUTMENTS THAT FALL OUTSIDE THE LIMITS OF STRUCTURE EXCAVATION OR UNCLASSIFIED CHANNEL EXCAVATION.

10. THE “STONE FILL, TYPE III” UNDER THE BRIDGE AS SHOWN IN THE PLANS SHALL BE PLACED BEFORE THE GIRDERS ARE SET.

CONCRETE

11. TEST BARS SHALL BE PROVIDED IN ACCORDANCE WITH THE “VERMONT AGENCY OF TRANSPORTATION MATERIAL SAMPLING MANUAL” AVAILABLE ON THE AGENCY WEBSITE. A MINIMUM OF TWO TEST SECTIONS ARE REQUIRED FOR EACH SIZE, BRAND, AND GRADE OR TYPE OF REINFORCING. SEE THE MANUAL FOR ACCEPTABLE DIMENSIONS OF TEST SECTIONS.

12. TIE WIRES AND CHAIRS FOR REINFORCEMENT SHALL BE COMPOSED OF THE SAME MATERIAL AS ANY STEEL BEING CONTACTED OR SHALL BE PLASTIC.

13. ITEM 514.10, "WATER REPELLENT, SILANE", SHALL BE APPLIED TO ALL EXPOSED CONCRETE ON THE BRIDGE SUPERSTRUCTURE AND SUBSTRUCTURE, WITH THE EXCEPTION OF THE BOTTOM OF THE DECK BETWEEN THE DRIP NOTCHES.

14. THE DECK, CURBS, AND ABUTMENTS & WINGWALLS ABOVE THE BRIDGE SEAT SHALL BE CONCRETE, HIGH PERFORMANCE CLASS A. THE APPROACH SLABS AND ABUTMENTS & WINGWALLS BELOW THE BRIDGE SEAT SHALL BE CONCRETE, HIGH PERFORMANCE CLASS B.

15. CONCRETE FOR THE DECK CLOSURE POUR SHALL MEET THE REQUIREMENTS OF ITEM 900.608, “SPECIAL PROVISION (HIGH PERFORMANCE CONCRETE, RAPID SET)”.

16. ALL EXPOSED EDGES OF CONCRETE SHALL BE CHAMFERED 1 INCH X 1 INCH.

17. ALL REINFORCING STEEL SHALL BE DETAILED AND FABRICATED USING PROCEDURES AND TOLERANCES IN ACCORDANCE WITH APPLICABLE PUBLICATIONS OF THE "CONCRETE REINFORCING STEEL INSTITUTE".

18. FORMWORK FOR SURFACES THAT WILL BE IN CONTACT WITH DECK CLOSURE POUR SHALL BE TREATED WITH CONCRETE SURFACE RETARDER, OR SIMILAR, TO PROVIDE A ROUGHENED SURFACE; AND POWER WASHED WITH WATER PRIOR TO PLACEMENT OF CLOSURE POUR CONCRETE.

19. CONCRETE PORTIONS OF THE ABUTMENTS AND WINGWALLS ABOVE THE BRIDGE SEAT SHALL NOT BE PLACED UNTIL FINSIH GRADES HAVE BEEN DETERMINED BY THE RESIDENT ENGINEER.

20. IN ACCORDANCE WITH SUBSECTION 506.23(A) AND AS DIRECTED BY THE RESIDENT ENGINEER, THE CONTRACTOR SHALL TAKE MEASURES NECESSARY TO PROTECT ALL SUBSTRUCTURE CONCRETE FROM STAINING DUE TO OXIDE FORMATION ON THE STRUCTURAL STEEL PRIOR TO PLACEMENT OF THE DECK. THESE MEASURES WILL NOT BE PAID FOR SEPERATELY BUT SHALL BE CONSIDERED INCIDENTAL TO ITEM 501.34, “CONCRETE, HIGH PERFORMANCE CLASS B”. ANY SUCH STAINING THAT OCCURS PRIOR TO DECK PLACEMENT SHALL BE REMOVED AT NO ADDITIONAL COST TO THE STATE.

21. THE DECK IS TO BE POURED IN ONE CONTINUOUS POUR WITH A MAXIMUM DURATION OF EIGHT HOURS FOR EACH PHASE OF CONSTRUCTION. IF CIRCUMSTANCES BEYOND THE CONTRACTOR’S CONTROL PREVENT THIS FROM BEING ACCOMPLISHED, A TRANSVERSE CONSTRUCTION JOINT SHALL BE USED BETWEEN ADJACENT POURS. A MINIMUM 96 HOUR DELAY BETWEEN ADJACENT POURS SHALL BE OBSERVED.

22. ALL REINFORCING STEEL IN THE DECK, CURBS, AND ABUTMENTS & WINGWALLS ABOVE THE BRIDGE SEAT SHALL MEET THE REQUIREMENTS FOR LEVEL III CORROSION RESISTANCE IN ACCORDANCE WITH SECTION 507. BARS DENOTED WITH A “.3” INDICATE LEVEL III CORROSION RESISTANCE.

23. REINFORCING STEEL IN THE APPROACH SLABS AND ABUTMENTS & WINGWALLS BELOW THE BRIDGE SEAT SHALL MEET THE REQUIREMENTS FOR LEVEL I CORROSION RESISTANCE IN ACCORDANCE WITH SECTION 507.

STRUCTURAL STEEL

24. STRUCTURAL STEEL MEMBERS DESIGNATED “CVN” IN THE PLANS SHALL BE CHARPY V-NOTCH TESTED IN ACCORDANCE WITH SUBSECTION 714.01.

25. ANY HOLES IN THE WEBS OF FASCIA GIRDERS NOT OTHERWISE FILLED SHALL BE FILLED WITH BUTTON HEAD BOLTS. THESE BOLTS SHALL BE TIGHTENED IN ACCORDANCE WITH SUBSECTION 506.19.

26. ANY CONNECTIONS NOT DETAILED ON THE PLANS SHALL BE DETAILED BY THE FABRICATOR AND SUBMITTED TO THE PROJECT MANAGER FOR APPROVAL.

27. ALL WELDING SHALL CONFORM TO THE PROVISIONS OF SUBSECTION 506.10.

28. ALL FIELD CONNECTIONS SHALL BE MADE WITH 7/8” DIAMETER HIGH STRENGTH BOLTS IN 15/16” DIAMETER HOLES, PER SECTION 506 UNLESS OTHERWISE NOTED.

29. FLEMING BRACKETS OR SIMILAR FALSE WORK SHALL BE PLACED AT A MAXIMUM SPACING OF 4 FEET. THE BRACKETS SHALL BEAR NEAR THE BOTTOM FLANGE AND IN NO CASE SHALL THEY BEAR ABOVE THE BOTTOM QUARTER WEB.

30. AFTER THE GIRDERS HAVE BEEN ERECTED, ELEVATIONS SHALL BE TAKEN ALONG THE TOP OF THE GIRDERS AS DIRECTED BY THE RESIDENT ENGINEER, FOR USE IN DETERMINING THE FINISHED GRADE.

31. GIRDER WEBS AND CROSS FRAMES SHALL BE PLUMB IN FINAL POSITION.

32. ALL BOLTS SHALL BE TENSIONED BY THE DIRECT TENSION INDICATOR METHOD IN ACCORDANCE WITH SUBSECTION 506.19.

H-PILES

33. THE PILE LOCATIONS SHALL BE PRE-EXCAVATED WITH A MINIMUM PENETRATION OF 3 FEET INTO COMPETENT BEDROCK. THE MINIMUM REQUIRED PILE LENGTH IS 10 FEET. IF COMPETENT BEDROCK IS ENCOUNTERED SHALLOWER THAN 7 FEET BELOW THE BOTTOM OF THE PILE CAP, PRE-EXCAVATION TO A MINIMUM DEPTH OF 10 FEET BELOW THE PILE CAP IS REQUIRED.

34. ALL PRE-EXCAVATED HOLES SHALL BE 20 INCHES IN DIAMETER. THE ENTIRE PRE-EXCAVATED HOLE SHALL BE BACKFILLED WITH SAND AFTER THE PILE IS SET. SAND SHALL CONFORM TO THE REQUIREMENTS OF SUBSECTION 703.03. REFER TO THE SPECIAL PROVISIONS FOR ADDITIONAL INFORMATION.

35. FOR ESTIMATING PURPOSES, THE PILE TIP ELEVATIONS WERE ASSUMED AS SHOWN ON THE BORING LOGS. THE ACTUAL IN PLACE LENGTHS MAY VARY.

36. THE TOPS OF THE PILES AFTER BACKFILLING WITH SAND SHALL NOT VARY FROM THE POSITION SHOWN ON THE PLANS BY MORE THAN 3 INCHES. THE PILE ORIENTATION SHALL NOT VARY BY MORE THAN 5 DEGREES. THE CONTRACTOR SHALL DEMONSTRATE TO THE SATISFACTION OF THE ENGINEER HOW THE TOLERANCES WILL BE MET. THESE MEASURES SHALL BE DEMONSTRATED IN A SUBMITTAL TO BE ACCEPTED BEFORE PILE PLACEMENT COMMENCES.

37. PRE-EXCAVATION IS REQUIRED AT ALL PILE LOCATIONS. PAYMENT SHALL BE PAID FOR UNDER ITEM 900.640, “SPECIAL PROVISION (PRE-EXCAVATION OF INTEGRAL ABUTMENTS PILES, EARTH)” OR ITEM 900.640, “SPECIAL PROVISION (PRE-EXCAVATION OF INTEGRAL ABUTMENTS PILES, ROCK)”.

MISCELLANEOUS

38. ITEM 520.10, “MEMBRANE WATERPROOFING, SPRAY APPLIED” SHALL BE APPLIED TO THE BRIDGE DECK AS PER THE MANUFACTURER’S INSTRUCTIONS AND EXTEND ONTO THE APPROACH SLABS TWO FEET BEYOND THE BEGIN BRIDGE/END OF BRIDGE. IF TRAFFIC WILL BE DRIVING DIRECTLY ON THE MEMBRANE SURFACE, AN AGGREGATE WEARING SURFACE SHALL BE ADHERED TO THE TOP MEMBRANE COAT PER THE SPECIFICATIONS.

39. EXISTING CONDITIONS SHEET HAS BEEN INCLUDED FOR THE CONTRACTOR TO USE FOR SUBMITTALS.

⚠ -SHEET REVISED 5/7/2014.
REPLACES SHEET 3 IN CONTRACT PLANS.

PROJECT NAME: MARLBORO	
PROJECT NUMBER: BRF 010-1(43)	
FILE NAME: s10414gen.dgn	PLOT DATE: 07-MAY-2014
PROJECT LEADER: K. HIGGINS	DRAWN BY: K. FRIEDLAND
DESIGNED BY: R. KLINEFELTER	CHECKED BY: J. SALVATORI
⚠ GENERAL NOTES	SHEET 3 OF 50

STATE OF VERMONT
AGENCY OF TRANSPORTATION

QUANTITY SHEET 1

SUMMARY OF ESTIMATED QUANTITIES				TOTALS		DESCRIPTIONS			
	ROADWAY	EROSION CONTROL	BRIDGE	FULL C.E. ITEMS	GRAND TOTAL	FINAL	UNIT	ITEMS	ITEM NUMBER	ROUND
	1				1		LS	CLEARING AND GRUBBING, INCLUDING INDIVIDUAL TREES AND STUMPS	201.10	
	1300				1300		CY	COMMON EXCAVATION	203.15	
			1700		1700		CY	UNCLASSIFIED CHANNEL EXCAVATION	203.27	
	200				200		CY	SAND BORROW	203.31	
	1				1		CY	TRENCH EXCAVATION OF EARTH, EXPLORATORY (N.A.B.I.)	204.22	
			550		550		CY	STRUCTURE EXCAVATION	204.25	
			325		325		CY	GRANULAR BACKFILL FOR STRUCTURES	204.30	
	450				450		SY	COLD PLANING, BITUMINOUS PAVEMENT	210.10	
	850				850		CY	SUBBASE OF DENSE GRADED CRUSHED STONE	301.35	
	50				50		CY	AGGREGATE SHOULDERS, IN PLACE	402.10	
	8				8		CWT	EMULSIFIED ASPHALT	404.65	
	1				1		LU	PRICE ADJUSTMENT, ASPHALT CEMENT (N.A.B.I.)	406.50	
			1		1		LS	SHORING SUPERSTRUCTURE	502.10	
			156		156		LF	STEEL PILING, HP 10 X 57	505.12	
			500		500		LB	REINFORCING STEEL, LEVEL II	507.12	
			1500		1500		LB	REINFORCING STEEL, LEVEL III	507.13	
			15		15		GAL	WATER REPELLENT, SILANE	514.10	
			81		81		LF	BRIDGE EXPANSION JOINT, ASPHALTIC PLUG	516.10	
			371		371		SY	MEMBRANE WATERPROOFING, SPRAY APPLIED	520.10	
			81		81		LF	JOINT SEALER, HOT POURED	524.11	
			168		168		LF	BRIDGE RAILING, GALVANIZED 2 RAIL BOX BEAM	525.33	
			1		1		EACH	REMOVAL OF STRUCTURE (1,500 SF - EST)	529.15	
			24		24		EACH	BEARING DEVICE ASSEMBLY, PLAIN ELASTOMERIC PAD	531.16	
			1		1		LS	PRECAST CONCRETE STRUCTURE (ABUTMENT #1)	540.10	
			1		1		LS	PRECAST CONCRETE STRUCTURE (ABUTMENT #2)	540.10	
			1		1		LS	PRECAST CONCRETE STRUCTURE (APPROACH SLAB #1)	540.10	
			1		1		LS	PRECAST CONCRETE STRUCTURE (APPROACH SLAB #2)	540.10	
		1			1		MGAL	DUST CONTROL WITH WATER	609.10	
			1150		1150		CY	STONE FILL, TYPE III	613.12	
								BEGIN OPTION AA		
	160				160		LF	PRECAST REINFORCED CONCRETE CURB, TYPE B	616.26	
	160				160		LF	CAST-IN-PLACE CONCRETE CURB, TYPE B	616.28	
								END OPTION AA		
	4				4		EACH	YIELDING MARKER POSTS	619.17	
	200				200		LF	HD STEEL BEAM GUARDRAIL, GALVANIZED	621.21	
	4				4		EACH	MANUFACTURED TERMINAL SECTION, TANGENT	621.51	
	4				4		EACH	GUARDRAIL APPROACH SECTION, GALVANIZED 2 RAIL BOX BEAM	621.72	
	487.5				487.5		LF	REMOVAL AND DISPOSAL OF GUARDRAIL	621.80	
	200				200		HR	UNIFORMED TRAFFIC OFFICERS	630.10	
	1000				1000		HR	FLAGGERS	630.15	

DETAILED SUMMARY OF QUANTITIES

QUANTITIES	UNIT	ITEMS
		EARTHWORK SUMMARY
1300	CY	COMMON EXCAVATION (1300*1.0)
1275	CY	UNCLASSIFIED CHANNEL EXCAVATION (1700*0.75)
412.5	CY	STRUCTURE EXCAVATION (550*0.75)
2987.5	CY	SUB TOTAL
12	CY	ROUNDING
3000	CY	TOTAL FILL AVAILABLE
25	CY	TOTAL FILL REQUIRED
2975	CY	TOTAL WASTE
		SPECIAL PROVISION (BITUMINOUS CONCRETE PAVEMENT, SMALL QUANITIY)
195	TON	TYPE IIS
275	TON	TYPE IVS
470	TON	TOTAL SUPERPAVE

PROJECT NAME: MARLBORO
PROJECT NUMBER: BRF 010-1(43)

FILE NAME: s10b414quantity_sheets.dgn
PROJECT LEADER: K. HIGGINS
DESIGNED BY: R. KLINEFELTER
QUANTITY SHEET 1

PLOT DATE: 28-AUG-2013
DRAWN BY: K. FRIEDLAND
CHECKED BY: J. SALVATORI
SHEET 4 OF 50

STATE OF VERMONT
AGENCY OF TRANSPORTATION

QUANTITY SHEET 2

SUMMARY OF ESTIMATED QUANTITIES									TOTALS		DESCRIPTIONS				DETAILED SUMMARY OF QUANTITIES		
						ROADWAY	EROSION CONTROL	BRIDGE	FULL C.E. ITEMS	GRAND TOTAL	FINAL	UNIT	ITEMS	ITEM NUMBER	ROUND	QUANTITIES	UNIT	ITEMS
									1	1		LS	FIELD OFFICE, ENGINEERS	631.10				
									1	1		LS	TESTING EQUIPMENT, CONCRETE	631.16				
									1	1		LS	TESTING EQUIPMENT, BITUMINOUS	631.17				
									3000	3000		DL	FIELD OFFICE TELEPHONE (N.A.B.I.)	631.26				
						1				1		LS	MOBILIZATION/DEMOBILIZATION	635.11				
						850				850		LF	4 INCH WHITE LINE	646.20				
						850				850		LF	4 INCH YELLOW LINE	646.21				
								1400		1400		SY	GEOTEXTILE UNDER STONE FILL	649.31				
							185			185		SY	GEOTEXTILE FOR SILT FENCE	649.51				
							225			225		SY	GEOTEXTILE FOR FILTER CURTAIN	649.61				
							5			5		LB	SEED	651.15				
							5			5		LB	SEED, WINTER RYE	651.17				
							40			40		LB	FERTILIZER	651.18				
							1			1		TON	AGRICULTURAL LIMESTONE	651.20				
							1			1		TON	HAY MULCH	651.25				
							70			70		CY	TOPSOIL	651.35				
								775		775		SY	GRUBBING MATERIAL	651.40				
							1			1		LS	EPSC PLAN	652.10				
							40			40		HR	MONITORING EPSC PLAN	652.20				
							1			1		LU	MAINTENANCE OF EPSC PLAN (N.A.B.I.)	652.30				
							400			400		SY	TEMPORARY EROSION MATTING	653.20				
							90			90		CY	VEHICLE TRACKING PAD	653.35				
							600			600		LF	PROJECT DEMARCATION FENCE	653.55				
						0.66				0.66		SF	TRAFFIC SIGNS, TYPE A	675.20				
						89				89		LF	SQUARE TUBE SIGN POST AND ANCHOR	675.341				
						6				6		EACH	REMOVING SIGNS	675.50				
						4				4		EACH	ERECTING SALVAGED SIGNS	675.60				
								27		27		CY	SPECIAL PROVISION (HIGH PERFORMANCE CONCRETE, RAPID SET)(FPQ)	900.608				
								40		40		LF	SPECIAL PROVISION (PRE-EXCAVATION OF INTEGRAL ABUTMENT PILES, EARTH)	900.640				
								110		110		LF	SPECIAL PROVISION (PRE-EXCAVATION OF INTEGRAL ABUTMENT PILES, ROCK)	900.640				
						1				1		LS	SPECIAL PROVISION (CPM SCHEDULE)	900.645				
						1				1		LS	SPECIAL PROVISION (TRAFFIC CONTROL, ALL-INCLUSIVE)	900.645				
						1				1		LU	SPECIAL PROVISION (MAT DENSITY PAY ADJUSTMENT, SMALL QUANTITY)(N.A.B.I.)	900.650				
						1				1		LU	SPECIAL PROVISION (MIXTURE PAY ADJUSTMENT)(N.A.B.I.)	900.650				
								382		382		SY	SPECIAL PROVISION (PREFABRICATED BRIDGE UNIT SUPERSTRUCTURE)	900.675				
						470				470		TON	SPECIAL PROVISION (BITUMINOUS CONCRETE PAVEMENT, SMALL QUANTITY)	900.680				

PROJECT NAME: MARLBORO
PROJECT NUMBER: BRF 010-1(43)

FILE NAME: s10b414quantity_sheets.dgn
PROJECT LEADER: K. HIGGINS
DESIGNED BY: R. KLINEFELTER
QUANTITY SHEET 2

PLOT DATE: 19-SEP-2013
DRAWN BY: K. FRIEDLAND
CHECKED BY: J. SALVATORI
SHEET 5 OF 50

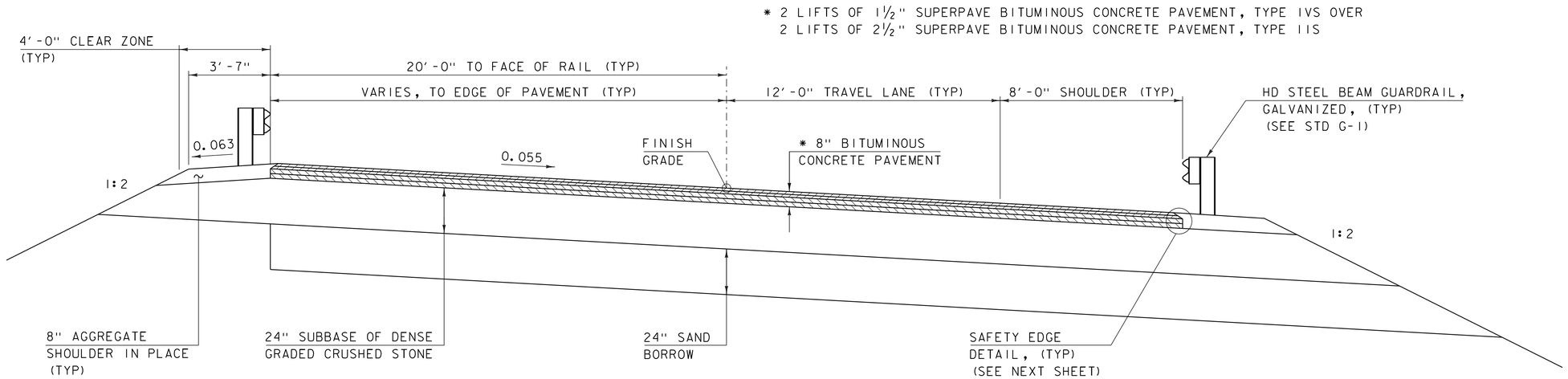

ROADWAY TYPICAL SECTION

SCALE: ⅜" = 1'-0"

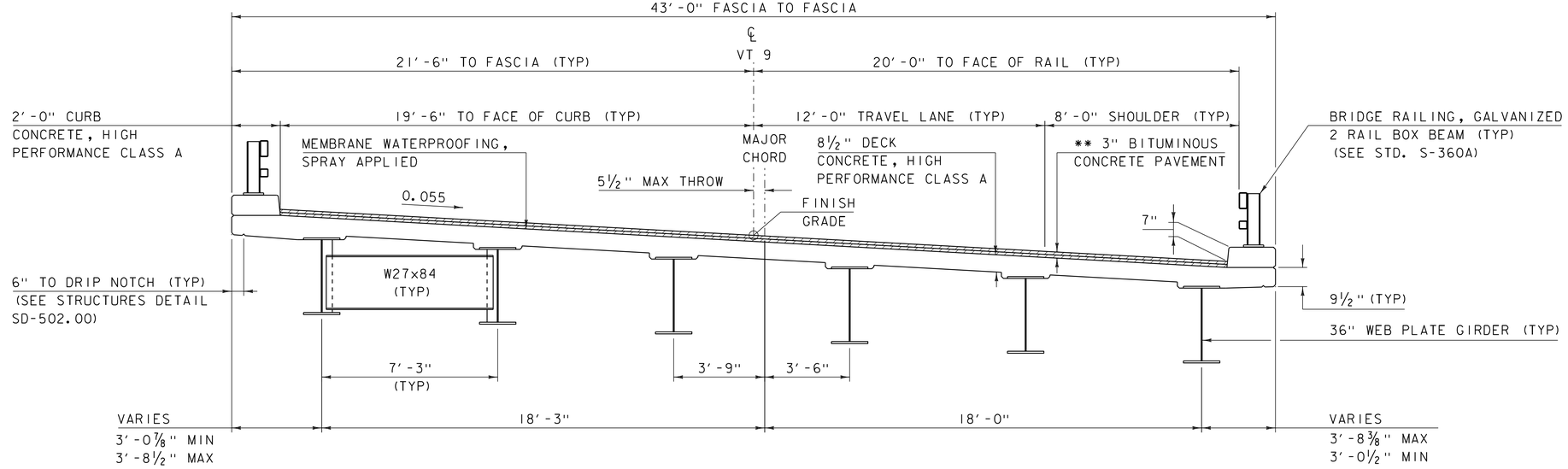

** 2 LIFTS OF 1½" SUPERPAVE BITUMINOUS CONCRETE PAVEMENT, TYPE IVS

BRIDGE TYPICAL SECTION ⚠

SCALE: ⅜" = 1'-0"

MATERIAL TOLERANCES
(IF USED ON PROJECT)

SURFACE	
- PAVEMENT (TOTAL THICKNESS)	+/- ¼"
- AGGREGATE SURFACE COURSE	+/- ½"
SUBBASE	+/- 1"
SAND BORROW	+/- 1"

⚠ - REVISED 4/8/2014.
REPLACES SHEET 6 IN CONTRACT PLANS.

PROJECT NAME: MARLBORO
PROJECT NUMBER: BRF 010-1(43)

FILE NAME: s10b414typ.dgn
PROJECT LEADER: K. HIGGINS
DESIGNED BY: R. KLINEFELTER
TYPICAL SECTIONS 1

PLOT DATE: 08-APR-2014
DRAWN BY: K. FRIEDLAND
CHECKED BY: J. SALVATORI
SHEET 6 OF 50

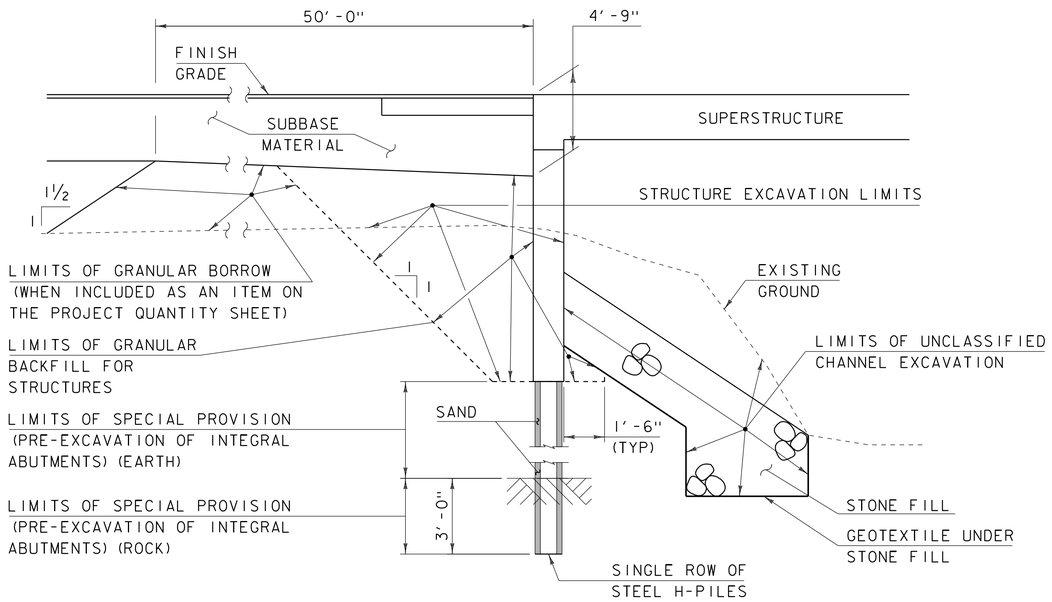

TYPICAL INTEGRAL ABUTMENT SECTION

NOT TO SCALE

ACTUAL LIMITS OF STRUCTURE EXCAVATION SHALL BE DETERMINED BY THE CONTRACTOR. HOWEVER, ONLY THE EXCAVATION BETWEEN THE LIMITS SHOWN WILL BE PAID FOR UNDER THE ITEM 204.25 "STRUCTURE EXCAVATION". EXCAVATION BY THE CONTRACTOR OUTSIDE OF THESE LIMITS WILL BE AT THE EXPENSE OF THE CONTRACTOR.

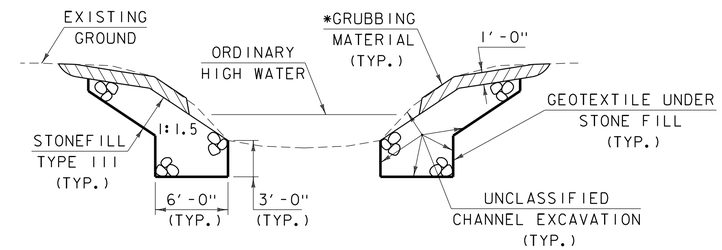

CHANNEL TYPICAL SECTION

NOT TO SCALE

*GRUBBING MATERIAL SHALL NOT BE PLACED ON THE STONE FILL IN THE AREA UNDER THE BRIDGE. WHENEVER CHANNEL SLOPE INTERSECTS ROADWAY SUBBASE, GRUBBING MATERIAL SHALL BEGIN AT THE BOTTOM OF SUBBASE.

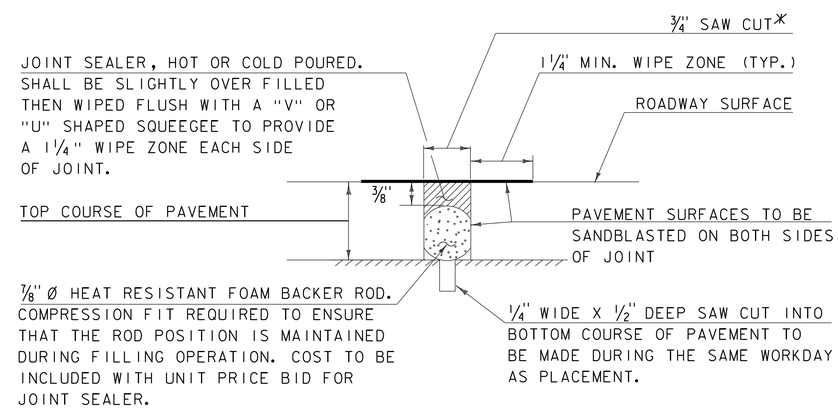

SAWED PAVEMENT JOINT DETAIL

(NOT TO SCALE)

*JOINT IS TO BE LOCATED ACCURATELY BY STRING LINING, OR OTHER MEANS, PRIOR TO PAVING, SO THAT THE SAW CUTS WILL BE MADE DIRECTLY OVER THE END OF CONCRETE DECK. JOINT SHALL BE CUT DRY IN A SINGLE PASS AND BE SEALED WITHIN 24 HOURS OR PRIOR TO EXPOSURE TO TRAFFIC. JOINT SHALL BE CLEANED PRIOR TO APPLYING THE JOINT SEALER.

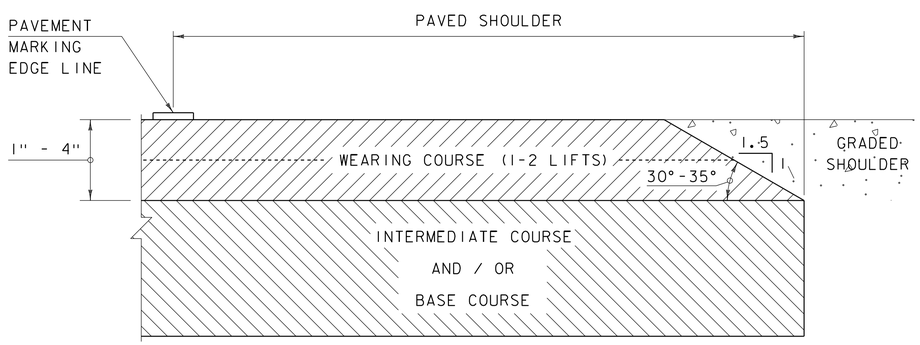

SAFETY EDGE DETAIL

NOT TO SCALE

NOTE: LEVELING COURSE MAY INCLUDE THE "SAFETY EDGE" AT THE CONTRACTOR'S CHOICE.

PROJECT NAME: MARLBORO	
PROJECT NUMBER: BRF 010-1(43)	
FILE NAME: s10b414typ.dgn	PLOT DATE: 28-AUG-2013
PROJECT LEADER: K. HIGGINS	DRAWN BY: K. FRIEDLAND
DESIGNED BY: R. KLINEFELTER	CHECKED BY: G. LAROCHE
TYPICAL SECTIONS 2	SHEET 7 OF 50

GENERAL INFORMATION

SYMBOLOGY LEGEND NOTE

THE SYMBOLOGY ON THIS SHEET IS INTENDED TO COVER STANDARD CONVENTIONAL SYMBOLOGY. THE SYMBOLOGY IS USED FOR EXISTING & PROPOSED FEATURES WITH HEAVIER LINEWEIGHT, IN COMBINATION WITH PROJECT ANNOTATION, AS NOTED ON PROJECT PLAN SHEETS. THIS LEGEND SHEET COVERS THE BASICS. SYMBOLOGY ON PLANS MAY VARY, PLAN ANNOTATIONS AND NOTES SHOULD BE USED TO CLARIFY AS NEEDED.

R.O.W. ABBREVIATIONS (CODES) & SYMBOLS

POINT	CODE	DESCRIPTION
	CH	CHANNEL EASEMENT
	CONST	CONSTRUCTION EASEMENT
	CUL	CULVERT EASEMENT
	D&C	DISCONNECT & CONNECT
	DIT	DITCH EASEMENT
	DR	DRAINAGE EASEMENT
	DRIVE	DRIVEWAY EASEMENT
	EC	EROSION CONTROL
	I&M	INSTALL & MAINTAIN EASEMENT
	LAND	LANDSCAPE EASEMENT
	SR	SLOPE RIGHT
	UE	UTILITY EASEMENT
	(P)	PERMANENT EASEMENT
	(T)	TEMPORARY EASEMENT
■	BNDNS	BOUND SET
⊡	BNDNS	BOUND TO BE SET
●	IPNS	IRON PIN SET
◎	IPNS	IRON PIN TO BE SET
⊠	CALC	CALCULATED ROW POINT
[DISTANCE]		DISTANCE CARRIED ON NEXT SHEET

COMMON TOPOGRAPHIC POINT SYMBOLS

POINT	CODE	DESCRIPTION
	APL	BOUND APPARENT LOCATION
	BM	BENCH MARK
	BND	BOUND
	CB	CATCH BASIN
	COMB	COMBINATION POLE
	DITHR	DROP INLET THROATED DNC
	EL	ELECTRIC POWER POLE
	FPOLE	FLAGPOLE
	GASFIL	GAS FILLER
	GP	GUIDE POST
	GSO	GAS SHUT OFF
	GUY	GUY POLE
	GUYW	GUY WIRE
	GV	GATE VALUE
	H	TREE HARDWOOD
	HCTRL	CONTROL HORIZONTAL
	HVCTRL	CONTROL HORIZ. & VERTICAL
	HYD	HYDRANT
	IP	IRON PIN
	IPIPE	IRON PIPE
	LI	LIGHT - STREET OR YARD
	MB	MAILBOX
	MH	MANHOLE (MH)
	MM	MILE MARKER
	PM	PARKING METER
	PMK	PROJECT MARKER
	POST	POST STONE/WOOD
	RRSIG	RAILROAD SIGNAL
	RRSL	RAILROAD SWITCH LEVER
	S	TREE SOFTWOOD
	SAT	SATELLITE DISH
	SHRUB	SHRUB
	SIGN	SIGN
	STUMP	STUMP
	TEL	TELEPHONE POLE
	TIE	TIE
	TSIGN	SIGN W/DOUBLE POST
	VCTRL	CONTROL VERTICAL
	WELL	WELL
	WSO	WATER SHUT OFF

THESE ARE COMMON VAOT SURVEY POINT SYMBOLS FOR EXISTING FEATURES, ALSO USED FOR PROPOSED FEATURES WITH HEAVIER LINEWEIGHT, IN COMBINATION WITH PROPOSED ANNOTATION.

PROPOSED GEOMETRY CODES

CODE	DESCRIPTION
PC	POINT OF CURVATURE
PI	POINT OF INTERSECTION
CC	CENTER OF CURVE
PT	POINT OF TANGENCY
PCC	POINT OF COMPOUND CURVE
PRC	POINT OF REVERSE CURVE
POB	POINT OF BEGINNING
POE	POINT OF ENDING
STA	STATION PREFIX
AH	AHEAD STATION SUFFIX
BK	BACK STATION SUFFIX
D	CURVE DEGREE OF (100FT)
R	CURVE RADUIS OF
T	CURVE TANGENT LENGTH
L	CURVE LENGTH OF
E	CURVE EXTERNAL DISTANCE

UTILITY SYMBOLOGY

UNDERGROUND UTILITIES

UT	TELEPHONE
UE	ELECTRIC
UC	CABLE (TV)
UEC	ELECTRIC+CABLE
UET	ELECTRIC+TELEPHONE
UCT	CABLE+TELEPHONE
UECT	ELECTRIC+CABLE+TELEP.
G	GAS LINE
W	WATER LINE
S	SANITARY SEWER (SEPTIC)

ABOVE GROUND UTILITIES (AERIAL)

T	TELEPHONE
E	ELECTRIC
C	CABLE (TV)
EC	ELECTRIC+CABLE
ET	ELECTRIC+TELEPHONE
AER E&T	ELECTRIC+TELEPHONE
CT	CABLE+TELEPHONE
ECT	ELECTRIC+CABLE+TELEP.
	UTILITY POLE GUY WIRE

PROJECT CONSTRUCTION SYMBOLOGY

PROJECT DESIGN & LAYOUT SYMBOLOGY

CZ	CLEAR ZONE
	PLAN LAYOUT MATCHLINE

PROJECT CONSTRUCTION FEATURES

	TOP OF CUT SLOPE
	TOE OF FILL SLOPE
	STONE FILL
	BOTTOM OF DITCH ℄
	CULVERT PROPOSED
	STRUCTURE SUBSURFACE
PDF PDF	PROJECT DEMARCATION FENCE
BF BF	BARRIER FENCE
	TREE PROTECTION ZONE (TPZ)
	STRIPING LINE REMOVAL
	SHEET PILES

CONVENTIONAL BOUNDARY SYMBOLOGY

BOUNDARY LINES

TOWN LINE	TOWN BOUNDARY LINE
COUNTY LINE	COUNTY BOUNDARY LINE
STATE LINE	STATE BOUNDARY LINE
	PROPOSED STATE R.O.W. (LIMITED ACCESS)
	PROPOSED STATE R.O.W.
	STATE ROW (LIMITED ACCESS)
	STATE ROW
	TOWN ROW
	PERMANENT EASEMENT LINE (P)
	TEMPORARY EASEMENT LINE (T)
	SURVEY LINE
P/L P/L	PROPERTY LINE (P/L)
SR SR SR	SLOPE RIGHTS
6f 6f	6F PROPERTY BOUNDARY
4f 4f	4F PROPERTY BOUNDARY
HAZ HAZ	HAZARDOUS WASTE

EPSC LAYOUT PLAN SYMBOLOGY

EPSC MEASURES

	FILTER CURTAIN
	SILT FENCE
	SILT FENCE WOVEN WIRE
	CHECK DAM
	DISTURBED AREAS REQUIRING RE-VEGETATION
	EROSION MATTING

ENVIRONMENTAL RESOURCES

	WETLAND BOUNDARY
	RIPARIAN BUFFER ZONE
	WETLAND BUFFER ZONE
	SOIL TYPE BOUNDARY
T&E	THREATENED & ENDANGERED SPECIES
HAZ HAZ	HAZARDOUS WASTE AREA
AG	AGRICULTURAL LAND
HABITAT	FISH & WILDLIFE HABITAT
FLOOD PLAIN	FLOOD PLAIN
OHW	ORDINARY HIGH WATER (OHW)
	STORM WATER
	USDA FOREST SERVICE LANDS
	WILDLIFE HABITAT SUIT/CONN

ARCHEOLOGICAL & HISTORIC

ARCH	ARCHEOLOGICAL BOUNDARY
HISTORIC DIST	HISTORIC DISTRICT BOUNDARY
HISTORIC	HISTORIC AREA
H	HISTORIC STRUCTURE

CONVENTIONAL TOPOGRAPHIC SYMBOLOGY

EXISTING FEATURES

	ROAD EDGE PAVEMENT
	ROAD EDGE GRAVEL
	DRIVEWAY EDGE
	DITCH
	FOUNDATION
	FENCE (EXISTING)
	FENCE WOOD POST
	FENCE STEEL POST
	GARDEN
	ROAD GUARDRAIL
	RAILROAD TRACKS
	CULVERT (EXISTING)
	STONE WALL
	WALL
	WOOD LINE
	BRUSH LINE
	HEDGE
	BODY OF WATER EDGE
	LEDGE EXPOSED

PROJECT NAME: MARLBORO
PROJECT NUMBER: BRF 010-1(43)

FILE NAME: s10b414Legend.dgn
PROJECT LEADER: K. HIGGINS
DESIGNED BY: R. KLINEFELTER
LEGEND SHEET

PLOT DATE: 28-AUG-2013
DRAWN BY: K. FRIEDLAND
CHECKED BY: J. SALVATORI
SHEET 8 OF 50

GPS CONTROL POINTS

HVCTRL #1

"D 14 RESET"

N = 138636.34
E = 1587856.07
ELEV. = 1360.39

TO REACH FROM THE EAST END OF THE VT ROUTE 9 BRIDGE OVER I-91 IN BRATTLEBORO GO WEST ALONG VT ROUTE 9 FOR 6.8 MI (10.9 KM) TO THE INTERSECTION OF ASPEN DRIVE OR WOLF ROAD RIGHT AND MCARTHUR ROAD LEFT. TURN RIGHT AND GO NORTH ALONG ASPEN DRIVE FOR 0.15 MI (0.24 KM) TO MR ESAUS 2 STORY WOOD FRAME HOUSE AND SITE OF MARK ON LEFT. THE MARK IS SET IN THE TOP OF A 4.8 M (15.7 FT) X 1.0 M (3.3 FT) ROCK OUTCROP WHICH PROJECTS 0.5 M (1.6 FT) ABOVE GROUND SURFACE INA FLOWER BED. IT IS 26.8 M (87.9 FT) WEST OF AND ABOUT 2 M (6.6 FT) HIGHER THAN THE CENTERLINE OF ASPEN DRIVE, 7.1 M (23.3 FT) WEST OF THE CENTERLINE OF GRAVEL DRIVE TO THE HOUSE, 26.3 M (86.3 FT) SOUTH OF THE SOUTHEAST CORNER OF THE HOUSE, AND 4.4 M (14.4 FT) NORTHEAST OF THE NORTHEAST CORNER OF A GARAGE.

HVCTRL #8

"TURNER"

N = 137154.88
E = 1590676.52
ELEV. = 1271.37

TO REACH FROM WEST END OF THE VT. ROUTE 9 BRIDEGS OVER I-91 GO WEST ALONG VT. ROUTE 9 FOR 6.4 MI (10.3 KM) TO THE INTERSECTION OF HAMILTON ROAD RIGHT. CONTINUE WEST TO FIND A SAFE TURN AROUND AND RETURN TO THE INTERSECTION OF HAMILTON ROAD LEFT. TURN LEFT AND GO NORTH ALONG HAMILTON ROAD FOR 0.05 MI (0.08 KM) TO THE MARK ON THE LEFT IN A LAWN. THE MARK IS SET IN THE TOP OF A 0.4 M (1.3 FT.) X 0.4 M (1.3 FT) ROCK OUTCROP WHICH IS FLUSH WITH THE GROUND SURFACE. IT IS 6.6 M (21.7 FT) WEST OF AND ABOUT 1.0 M (3.3 FT) HIGHER THAN THE CENTERLINE OF HAMILTON ROAD, 16.0 M (52.5 FT) SOUTHEAST OF A 35 CM MAPLE, 29.6 M (97.1 FT) NORTH OF THE END OF A STONEWALL, 39.0 M (128.0 FT) NORTHEAST OF THE NORTHEAST CORNER OF AN ATTACHED GARAGE, 11.0 M (36.1 FT) WEST OF A FIBERGLASS WITNESS POST.

• Description provided by Vermont Agency of Transportation Geodetic Unit

TRAVERSE TIES

HVCTRL #3

NORTH =	137913.983
EAST =	1588033.422
ELEV. =	1316.717

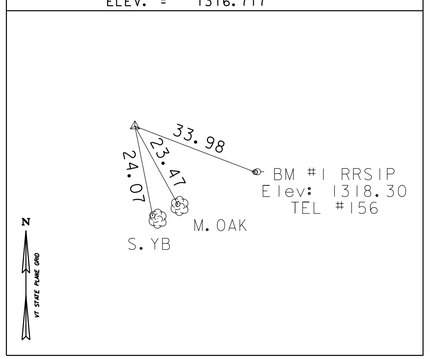

HVCTRL #4

NORTH =	137868.240
EAST =	1588998.310
ELEV. =	1297.570

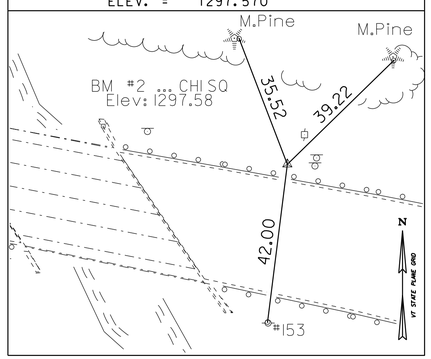

HVCTRL #5

NORTH =	137595.674
EAST =	1589591.281
ELEV. =	1287.412

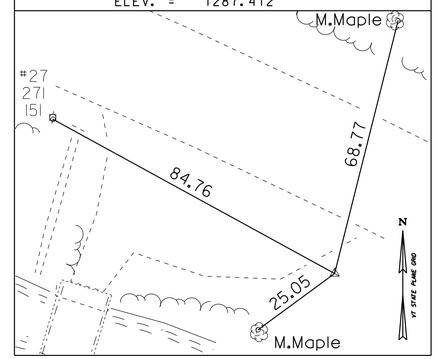

*Main Traverse Completed 10/27/98 by R.Gilman P.C. & T.Companion & G.Hitchcock [83b100]

ALIGNMENT TIES

DATUM	
VERTICAL	NAVD 88
HORIZONTAL	NAD 83 (96)
ADJUSTMENT	Compass

PROJECT NAME: MARLBORO
PROJECT NUMBER: BRF 010-1(43)

FILE NAME: survey\x10b414ti.dgn
PROJECT LEADER: K. HIGGINS
DESIGNED BY: R. KLINEFELTER
TIE SHEET

PLOT DATE: 28-AUG-2013
DRAWN BY: R. BULLOCK
CHECKED BY: G. LAROCHE
SHEET 9 OF 50

N

VT STATE PLANE GRID

WHETSTONE BROOK
FLOW

BM NO. 2
CHISELED SQUARE
ON ABUTMENT
EL. 1297.58

4-M. CHERRY
M. PINE
3' H X 1.5' W
EVERGREEN HEDGE
M. MAPLE
STONE
RET. WALL
M. MAPLE
6' X 6'
LILAC HEDGE
GUY
WIRE
#15T/268
WOODS
EXISTING ROW
M. MAPLE
M. MAPLE
VT 9
TO MARLBORO
HVCTRL
#275
HVCTRL
#300
WOODS
M. PINE
HVCTRL
#1015
M. PINE
GRAVEL
DRIVE
DITCH
#27/269
HVCTRL
#4
12" CGMP
WOODS
HVCTRL
#275 GUY
WIRE
#27/270
24"
CONC.
PIPE
VT 9
TO BRATTLEBORO
WOODS
HVCTRL
#271
GUY
WIRE
#154
GRAVEL
DRIVE
M. MAPLE
M. MAPLE
M. ASH
M. MAPLE
UNNAMED BROOK
FLOW
EXISTING ROW
120"
STEEL
PIPE
WOODS
#27/268-1
EXISTING ROW
EXISTING ROW

390+50
391+00
392+00
393+00
394+00
395+00
396+00
396+50

1300
1290

EXISTING BRIDGE DATA

SINGLE SPAN ROLLED BEAM, CONCRETE DECK
CONCRETE ABUTMENTS
OVERALL LENGTH = 54'
OVERALL WIDTH = 31.3'

EXISTING CONDITIONS

20 0 20

SCALE: 1" = 20'-0"

PROJECT NAME: MARLBORO	
PROJECT NUMBER: BRF 010-1(43)	
FILE NAME: s10b414existing_conditions.dgn	PLOT DATE: 28-AUG-2013
PROJECT LEADER: K. HIGGINS	DRAWN BY: K. FRIEDLAND
DESIGNED BY: R. KLINEFELTER	CHECKED BY: J. SALVATORI
EXISTING CONDITIONS	SHEET 10 OF 50

CONCRETE CURB, TYPE B (OPTION ITEM)

STA 392+66.60 - 393+06.52 LT
STA 392+75.90 - 393+15.99 RT
STA 393+89.16 - 394+29.08 LT
STA 394+00.61 - 394+40.70 RT

REMOVAL AND DISPOSAL OF GUARDRAIL

STA 392+10.67 - 393+09.86 LT
STA 392+52.76 - 393+40.95 RT
STA 393+63.52 - 394+99.89 LT
STA 393+96.92 - 395+60.26 RT

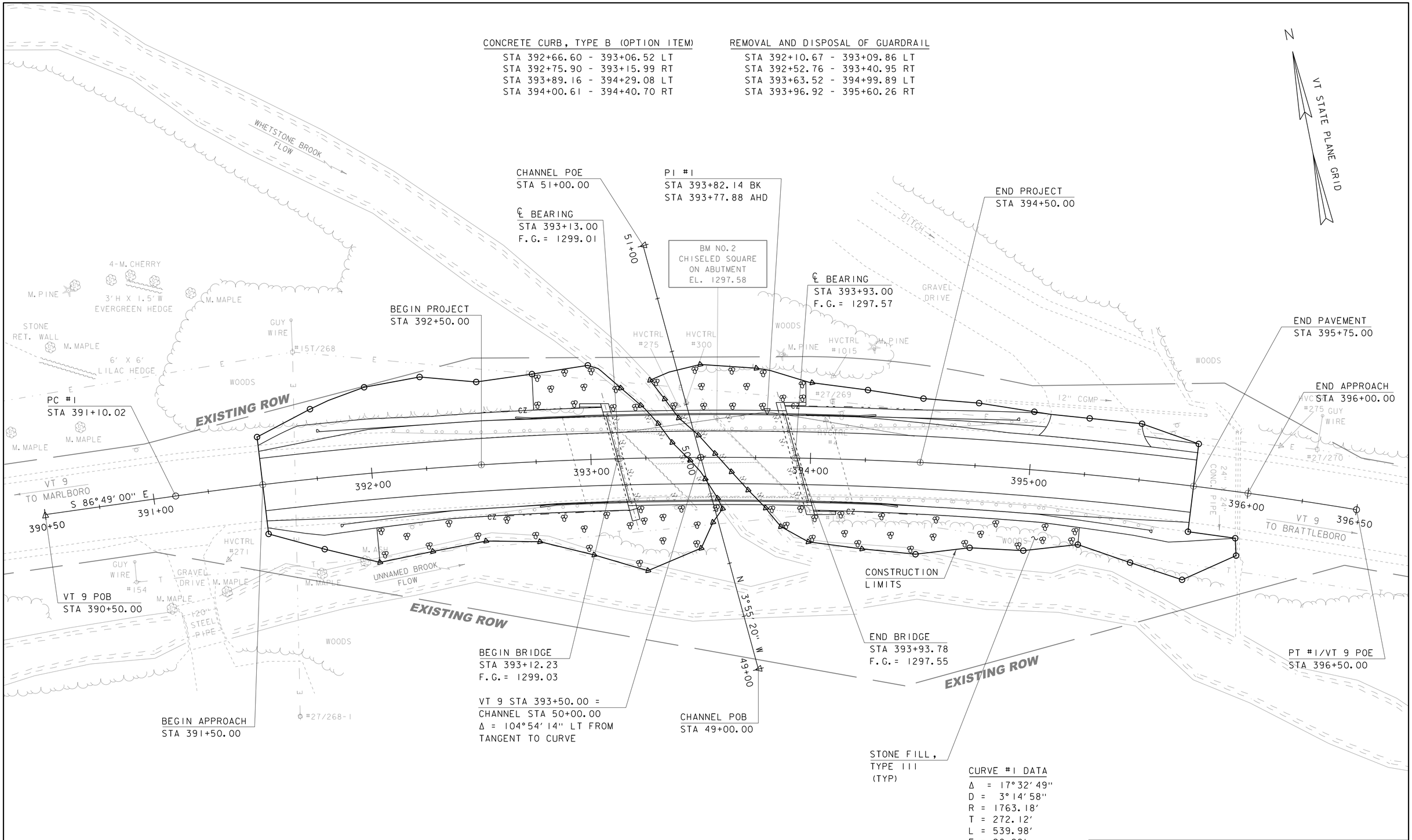

CURVE #1 DATA

Δ = 17°32'49"
D = 3°14'58"
R = 1763.18'
T = 272.12'
L = 539.98'
E = 20.88'

LAYOUT SHEET

20 0 20

SCALE: 1" = 20'-0"

PROJECT NAME: MARLBORO	
PROJECT NUMBER: BRF 010-1(43)	
FILE NAME: s10b414bdr.dgn	PLOT DATE: 28-AUG-2013
PROJECT LEADER: K. HIGGINS	DRAWN BY: K. FRIEDLAND
DESIGNED BY: R. KLINEFELTER	CHECKED BY: G. LAROCHE
LAYOUT SHEET	SHEET 11 OF 50

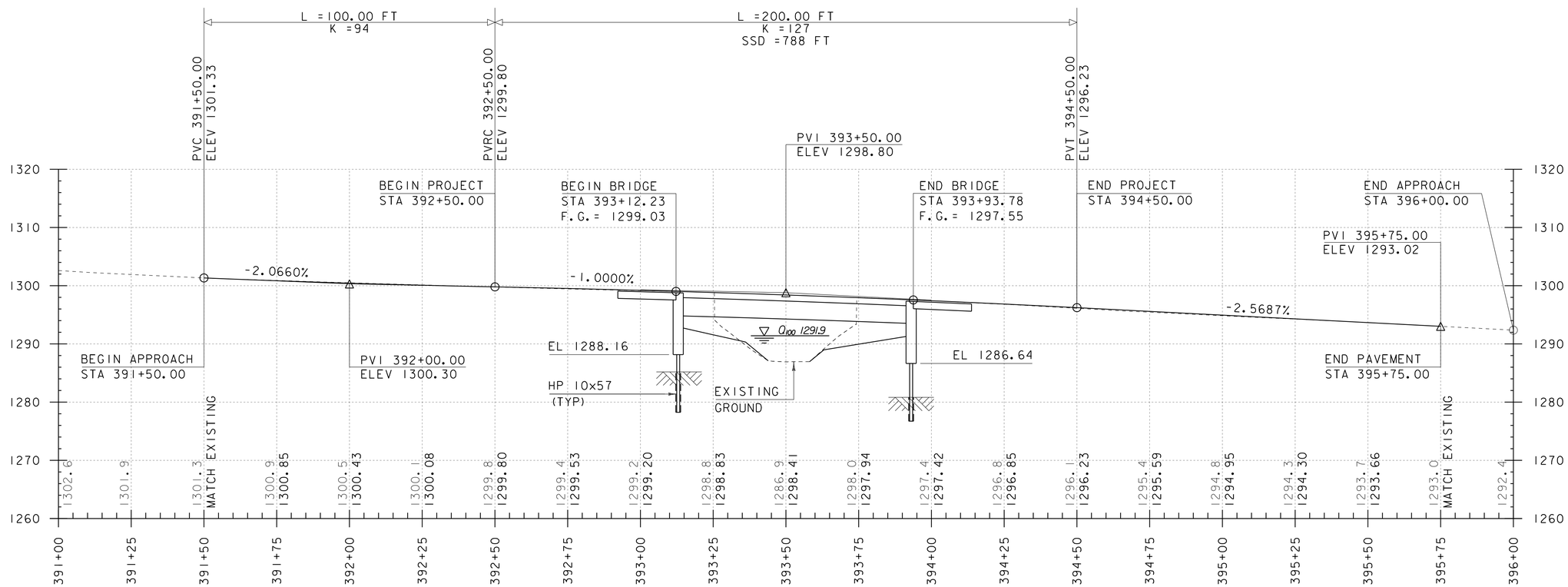

NOTE:

ELEVATIONS SHOWN TO THE NEAREST TENTH ARE EXISTING GROUND ALONG PROPOSED CENTERLINE.

ELEVATIONS SHOWN TO THE NEAREST HUNDREDTH ARE FINISH GRADES ALONG PROPOSED CENTERLINE.

MAINLINE PROFILE

HORIZONTAL SCALE: 1" = 20'-0"
VERTICAL SCALE: 1" = 10'-0"

PROJECT NAME: MARLBORO	
PROJECT NUMBER: BRF 010-1(43)	
FILE NAME: s10b414pro.dgn	PLOT DATE: 28-AUG-2013
PROJECT LEADER: K. HIGGINS	DRAWN BY: K. FRIEDLAND
DESIGNED BY: R. KLINEFELTER	CHECKED BY: G. LAROCHE
MAINLINE PROFILE	SHEET 12 OF 50

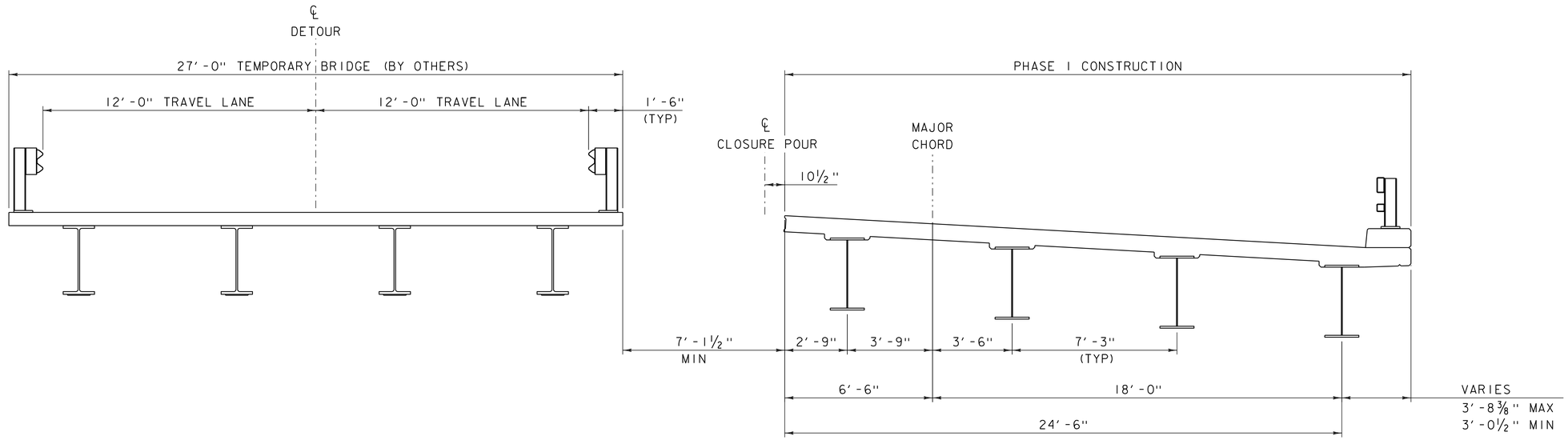

PHASE 1

SCALE: ⅜" = 1'-0"

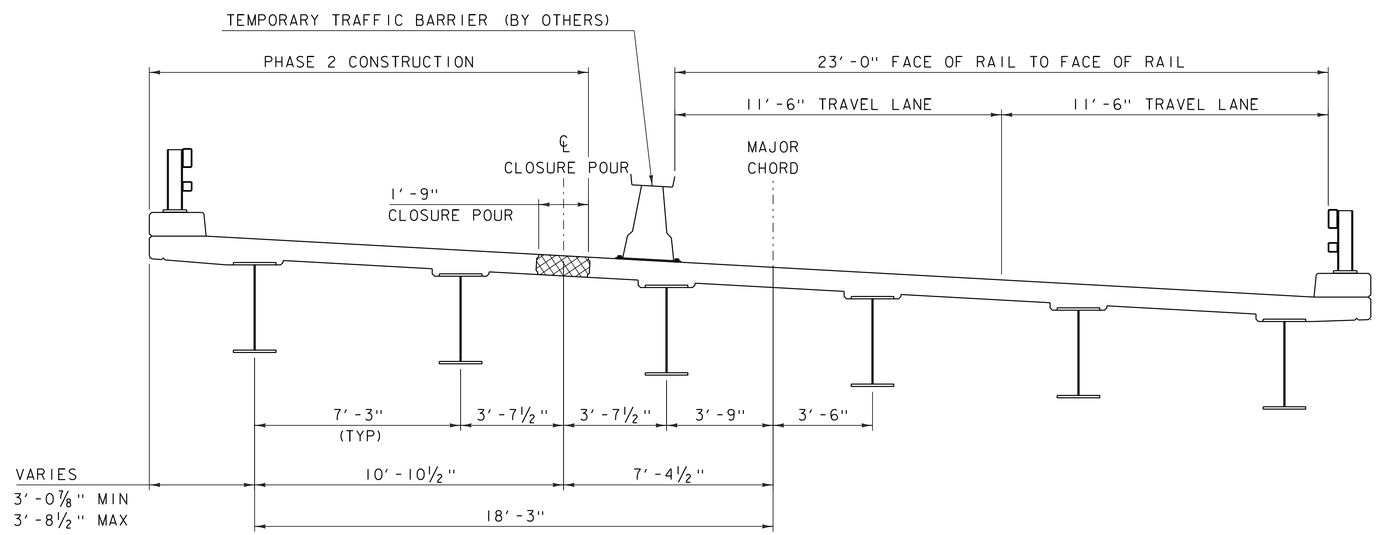

PHASE 2

SCALE: ⅜" = 1'-0"

NOTE:

CENTERLINE RUMBLE STRIPS ARE CURRENTLY IN PLACE ON THIS PORTION OF VERMONT ROUTE 9. IF FINAL PHASING PLAN REQUIRES MASKING OF ANY EXISTING CENTERLINE PAVEMENT MARKINGS, THE RUMBLE STRIPS WILL HAVE TO BE FILLED. IF THIS OCCURS, THE RUMBLE STRIP SHALL BE RESTORED AT THE END OF CONSTRUCTION. PAYMENT WILL BE INCIDENTAL TO CONTRACT ITEM 900.645 SPECIAL PROVISION (TRAFFIC CONTROL, ALL-INCLUSIVE).

⚠ -SHEET REVISED 4/8/2014.
REPLACES SHEET 13 IN CONTRACT PLANS.

PROJECT NAME: MARLBORO	
PROJECT NUMBER: BRF 010-1(43)	
FILE NAME: s10b414phasewrk.dgn	PLOT DATE: 08-APR-2014
PROJECT LEADER: K. HIGGINS	DRAWN BY: R. KLINEFELTER
DESIGNED BY: R. KLINEFELTER	CHECKED BY: J. SALVATORI
PHASE CONSTRUCTION DETAILS 1	SHEET 13 OF 50

⚠

THIS SHEET INTENTIONALLY LEFT BLANK

⚠ -SHEET ADDED 4/29/2014.
REPLACES SHEET 14 IN CONTRACT PLANS.

PROJECT NAME: MARLBORO	
PROJECT NUMBER: BRF 010-1(43)	
FILE NAME: s10b414phasewrk.dgn	PLOT DATE: 29-APR-2014
PROJECT LEADER: K. HIGGINS	DRAWN BY: R. KLINEFELTER
DESIGNED BY: R. KLINEFELTER	CHECKED BY: J. SALVATORI
⚠ BLANK	SHEET 14 OF 50

THIS SHEET INTENTIONALLY LEFT BLANK

⚠ -SHEET ADDED 4/29/2014.
REPLACES SHEET 15 IN CONTRACT PLANS.

PROJECT NAME: MARLBORO	
PROJECT NUMBER: BRF 010-1(43)	
FILE NAME: s10b414phase1.dgn	PLOT DATE: 29-APR-2014
PROJECT LEADER: K. HIGGINS	DRAWN BY: R. KLINEFELTER
DESIGNED BY: R. KLINEFELTER	CHECKED BY: J. SALVATORI
⚠ BLANK	SHEET 15 OF 50

THIS SHEET INTENTIONALLY LEFT BLANK

⚠ -SHEET ADDED 4/29/2014.
REPLACES SHEET 16 IN CONTRACT PLANS.

PROJECT NAME: MARLBORO	
PROJECT NUMBER: BRF 010-1(43)	
FILE NAME: s10b414phase2.dgn	PLOT DATE: 29-APR-2014
PROJECT LEADER: K. HIGGINS	DRAWN BY: R. KLINEFELTER
DESIGNED BY: R. KLINEFELTER	CHECKED BY: J. SALVATORI
⚠ BLANK	SHEET 16 OF 50

N

VT STATE PLANE GRID

WHETSTONE BROOK
FLOW

EXISTING POLE
TO REMAIN

NEW AERIAL TELEPHONE
AND ELECTRIC LINES

NEW UTILITY POLE
W/ 10' GUY WIRE
STA 394+10, 32' LT

END PROJECT
STA 394+50.00

DITCH

GRAVEL
DRIVE

4-M. CHERRY

M. PINE

3'H X 1.5'W
EVERGREEN HEDGE

M. MAPLE

STONE
RET. WALL

M. MAPLE

6' X 6'
LILAC HEDGE

GUY
WIRE

#15T/268

BEGIN PROJECT
STA 392+50.00

AER E&T

HVCTRL
#275

HVCTRL
#300

WOODS

M. PINE

HVCTRL
#1015

M. PINE

WOODS

END PAVEMENT
STA 395+75.00

END APPROACH
STA 396+00.00

HVCTRL
#275

GUY
WIRE

#27/270

12" CGMP

NEW AERIAL TELEPHONE
LINE ONLY (TYP)

EXISTING ROW

M. MAPLE

M. MAPLE

HVCTRL
#4

24" X 24"
CONC.
PIPE

VT 9
TO MARLBORO

390+50

391+00

392+00

393+00

394+00

395+00

396+00

396+50

VT 9
TO BRATTLEBORO

HVCTRL
#271

GUY
WIRE

#54

GRAVEL
DRIVE

M. MAPLE

M. MAPLE

M. ASH

M. MAPLE

UNNAMED BROOK
FLOW

CZ

#18

WOODS

CONSTRUCTION
LIMITS

EXISTING ROW

120"
STEEL
PIPE

EXISTING POLE
TO REMAIN

WOODS

BEGIN BRIDGE
STA 393+12.23
F.G.= 1299.03

END BRIDGE
STA 393+93.78
F.G.= 1297.55

EXISTING ROW

EXISTING POLE
TO REMAIN

BEGIN APPROACH
STA 391+50.00

#27/268-1

STONE FILL,
TYPE III
(TYP)

EXISTING BRIDGE DATA

SINGLE SPAN ROLLED BEAM, CONCRETE DECK
CONCRETE ABUTMENTS
OVERALL LENGTH = 54'
OVERALL WIDTH = 31.3'

PROPOSED UTILITY LAYOUT

20 0 20

SCALE: 1" = 20'-0"

PROJECT NAME: MARLBORO	
PROJECT NUMBER: BRF 010-1(43)	
FILE NAME: s10b414bdr.dgn	PLOT DATE: 28-AUG-2013
PROJECT LEADER: K. HIGGINS	DRAWN BY: K. FRIEDLAND
DESIGNED BY: R. KLINEFELTER	CHECKED BY: G. LAROCHE
PROPOSED UTILITY LAYOUT	SHEET 17 OF 50

REMOVING SIGNS
STA 392+16.30 RT (1)
STA 329+20.35 RT (1)
STA 393+38.55 RT (1)
STA 393+68.95 LT (1)
STA 394+13.60 LT (1)
STA 395+63.73 LT (1)

TRAFFIC SIGNS, TYPE A
STA 393+10.00 RT
STA 393+95.00 LT

ERECTING SALVAGED SIGNS
STA 392+16.30 RT (2)
STA 394+25.00 LT (1)
STA 395+64.80 LT (1)

4 INCH WHITE LINE
STA 391+50.00 - 395+75.00 LT
STA 391+50.00 - 395+75.00 RT

4 INCH YELLOW LINE (DOUBLE)
STA 391+50.00 - 395+75.00 CL

MILLED RUMBLE STRIPS
STA 391+50.00 - 395+75.00 CL

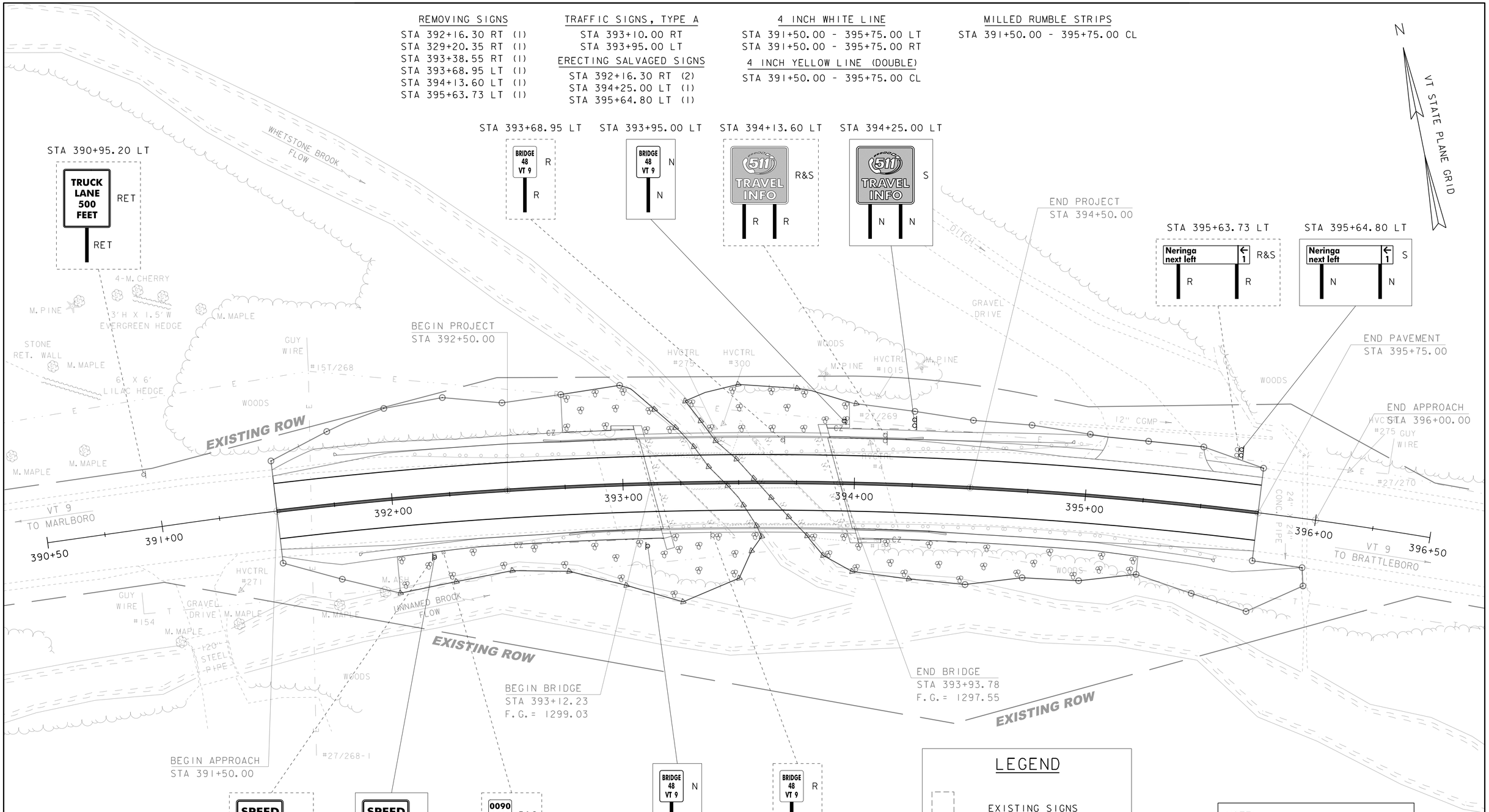

LEGEND

	EXISTING SIGNS
	NEW OR SALVAGED SIGNS
RET	RETAIN
R	REMOVE
N	NEW
R&S	REMOVE & SALVAGE
S	SALVAGE

NOTE:
ADJUST NEW CENTERLINE AND EDGE LINES TO MATCH EXISTING LINES AT BEGIN/END APPROACH

SIGNS AND PAVEMENT MARKINGS

20 0 20
SCALE: 1" = 20'-0"

PROJECT NAME: MARLBORO
PROJECT NUMBER: BRF 010-1(43)

FILE NAME: s10b414sign.dgn
PROJECT LEADER: K. HIGGINS
DESIGNED BY: R. KLINEFELTER
SIGNS AND PAVEMENT MARKINGS

PLOT DATE: 28-AUG-2013
DRAWN BY: K. FRIEDLAND
CHECKED BY: G. LAROCHE
SHEET 18 OF 50

STATE OF VERMONT
AGENCY OF TRANSPORTATION

TRAFFIC SIGN SUMMARY SHEET

MILEMARKER, STATION, OR SIGN NUMBER	SIGN LEGEND	SIGN DIMENSIONS EA	SIGN DIMENSIONS WIDTH (in)	SIGN DIMENSIONS HEIGHT (in)	NEW & SALVAGED SIGNS "A"	NEW & SALVAGED SIGNS "B"	NEW & SALVAGED SIGNS SALV SIGN	NEW & SALVAGED SIGNS SALV TIS	EXIST POST RETAIN	EXIST POST SALVAGE	NEW SIGN POSTS NO. OF POSTS	FLANGED CHANNEL lb/ft 1.12	FLANGED CHANNEL lb/ft 2.0	FLANGED CHANNEL lb/ft 3.0	SQUARE STEEL (in) lb/ft 1.75	SQUARE STEEL (in) lb/ft 2.0	SQUARE STEEL (in) lb/ft 2.5	ANCHOR	SLEEVE	TUBULAR ALUMINUM Ø (in) lb/ft 3.0	TUBULAR ALUMINUM Ø (in) lb/ft 4.0	TUBULAR ALUMINUM Ø (in) lb/ft 4.0 MOD	FOUND-ATION	TUBULAR STEEL Ø (in) lb/ft 3.0	TUBULAR STEEL Ø (in) lb/ft 3.5	TUBULAR STEEL Ø (in) lb/ft 4.0	TUBULAR STEEL Ø (in) lb/ft 5.0	W-SHAPE STEEL FTG. SIZE 24"	W-SHAPE STEEL FTG. SIZE 30"	W-SHAPE STEEL WEIGHT	W-SHAPE STEEL POST SIZE	STIGNE FRAME REQUIRED	REMARKS	SIGN DETAIL DETAIL IN SHS	SIGN DETAIL DETAIL ON SHEET NUMBER	SIGN DETAIL STD. SHEET NUMBER
												OPTION ITEMS																									
392+16.3 RT	SPEED LIMIT 50						X				1					15		X																			
392+16.3 RT	0090 1311 0740						X																														
393+10.0 RT	BRIDGE 48 VT 9	1	6	8	0.33						1				7			X																VD-701			E-134
393+95.0 LT	BRIDGE 48 VT 9	1	6	8	0.33						1				7			X																VD-701			E-134
394+25.0 LT	511 TRAVEL INFO						X				2					30		X																			
395+64.8 LT	Neringa next left ← 1						X				2					30		X																			
TOTALS		SF 0.66	SF	EA. 4	SF							FT	FT	FT	FT 14.0	FT 75.0	FT	EA	LB	LB	LB		LB	LB	LB	LB	EA.	EA.	LB							
												FT			FT 89				LB			EA.	LB				EA.	EA.	LB							

FINAL POST LENGTHS ARE TO BE DETERMINED IN THE FIELD. POST SIZES ARE COMPUTED BASED ON INFORMATION FURNISHED ON THE STANDARD SHEETS AND VTRANS "SIGN POST DESIGN GUIDELINE."
SHS = STANDARD HIGHWAY SIGNS

PROJECT NAME: MARLBORO
PROJECT NUMBER: BRF 010-1 (43)

FILE NAME: s10b414tss.dgn
PROJECT LEADER: K. HIGGINS
DESIGNED BY: R. KLINEFELTER
TRAFFIC SIGN SUMMARY SHEET

PLOT DATE: 28-AUG-2013
DRAWN BY: K. FRIEDLAND
CHECKED BY: G. LAROCHE
SHEET 19 OF 50

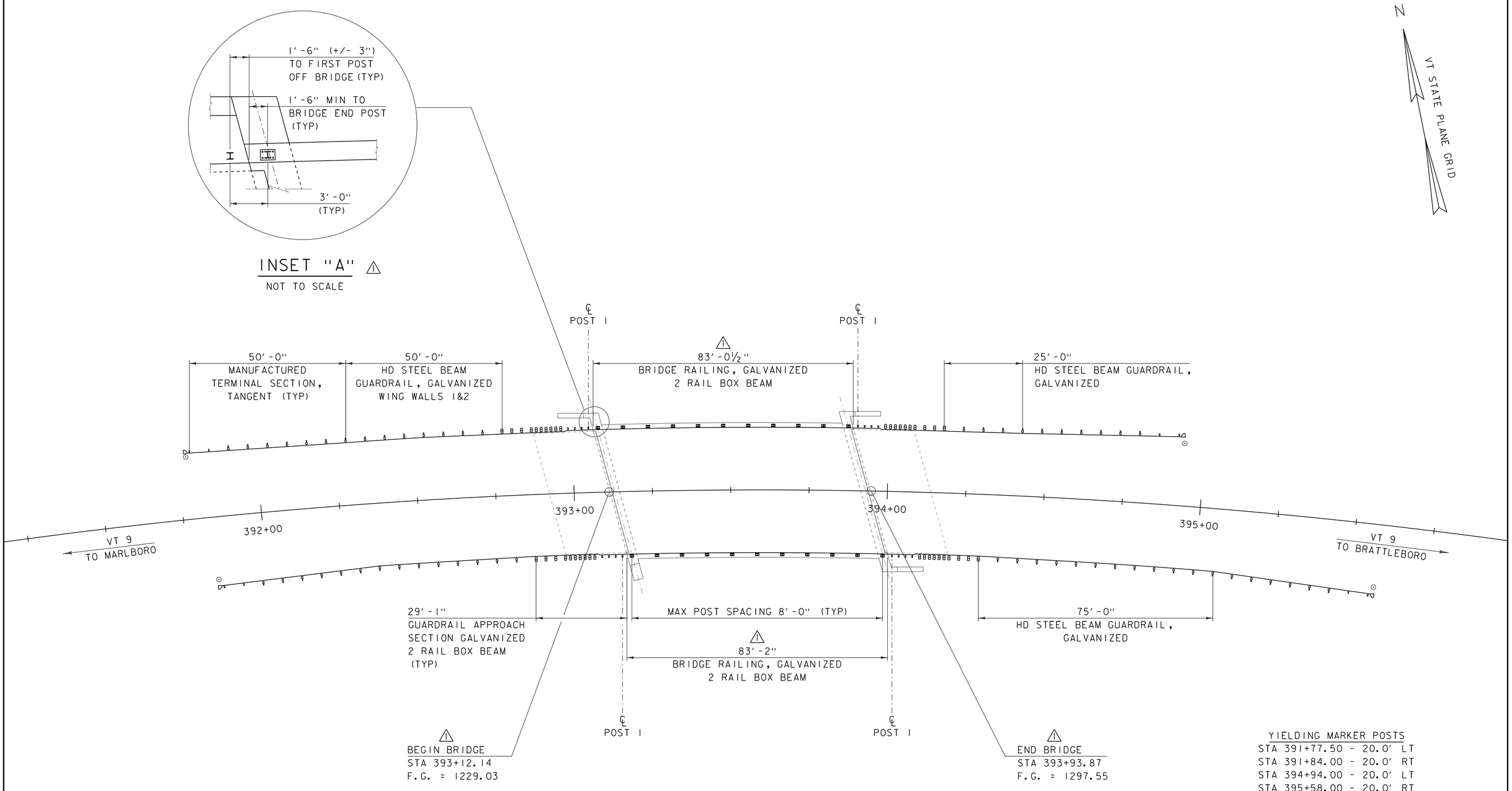

YIELDING MARKER POSTS

STA 391+77.50 - 20.0' LT
STA 391+84.00 - 20.0' RT
STA 394+94.00 - 20.0' LT
STA 395+58.00 - 20.0' RT

△1 -REVISED 4/25/2014.
REPLACES SHEET 20 IN CONTRACT PLANS.

NOTES:

1. SEE STANDARDS S-360A, S-360B, S-363, G-1 AND G-19.

RAIL LAYOUT SHEET

SCALE: 1" = 15'-0"

PROJECT NAME: MARLBORO	
PROJECT NUMBER: BRF 010-1(43)	
FILE NAME: s10b414rail.dgn	PLOT DATE: 25-APR-2014
PROJECT LEADER: K. HIGGINS	DRAWN BY: K. FRIEDLAND
DESIGNED BY: R. KLINEFELTER	CHECKED BY: J. SALVATORI
RAIL LAYOUT SHEET	SHEET 20 OF 50

SOIL CLASSIFICATION

AASHTO	
A1	Gravel and Sand
A3	Fine Sand
A2	Silty or Clayey Gravel and Sand
A4	Silty Soil - Low Compressibility
A5	Silty Soil - Highly Compressible
A6	Clayey Soil - Low Compressibility
A7	Clayey Soil - Highly Compressible

ROCK QUALITY DESIGNATION

R.Q.D. (%)	ROCK DESCRIPTION
<25	Very Poor
25 to 50	Poor
51 to 75	Fair
76 to 90	Good
>90	Excellent

SHEAR STRENGTH

UNDRAINED SHEAR STRENGTH IN P.S.F.	CONSISTENCY
<250	Very Soft
250-500	Soft
500-1000	Med. Stiff
1000-2000	Stiff
2000-4000	Very Stiff
>4000	Hard

CORRELATION GUIDE OF "N" TO DENSITY/CONSISTENCY

DENSITY (GRANULAR SOILS)		CONSISTENCY (COHESIVE SOILS)	
N	DESCRIPTIVE TERM	N	DESCRIPTIVE TERM
<5	Very Loose	<2	Very Soft
5-10	Loose	2-4	Soft
11-24	Med. Dense	5-8	Med. Stiff
25-50	Dense	9-15	Stiff
>50	Very Dense	16-30	Very Stiff
		31-60	Hard
		>60	Very Hard

COMMONLY USED SYMBOLS

▼	Water Elevation
⊗	Standard Penetration Boring
⊕	Auger Boring
⊙	Rod Sounding
S	Sample
N	Standard Penetration Test Blow Count Per Foot For: 2" O.D. Sampler 1 3/8" I.D. Sampler Hammer Weight Of 140 Lbs. Hammer Fall Of 30"
VS	Field Vane Shear Test
US	Undisturbed Soil Sample
B	Blast
DC	Diamond Core
MD	Mud Drill
WA	Wash Ahead
HSA	Hollow Stem Auger
AX	Core Size 1 1/8"
BX	Core Size 1 5/8"
NX	Core Size 2 1/8"
M	Double Tube Core Barrel Used
LL	Liquid Limit
PL	Plastic Limit
PI	Plasticity Index
NP	Non Plastic
w	Moisture Content (Dry Wgt. Basis)
D	Dry
M	Moist
MTW	Moist To Wet
W	Wet
Sat	Saturated
Bo	Boulder
Gr	Gravel
Sa	Sand
Si	Silt
Cl	Clay
HP	Hardpan
Le	Ledge
NLTD	No Ledge To Depth
CNPF	Can Not Penetrate Further
TLOB	Top of Ledge Or Boulder
NR	No Recovery
Rec.	Recovery
%Rec.	Percent Recovery
RQD	Rock Quality Designation
CBR	California Bearing Ratio
<	Less Than
>	Greater Than
R	Refusal (N > 100)
VTSPG	NAD83 - See Note 7

COLOR

blk	Black	pnk	Pink
bl	Blue	pu	Purple
brn	Brown	rd	Red
dk	Dark	tn	Tan
gry	Gray	wh	White
gn	Green	yel	Yellow
lt	Light	mltc	Multicolored
or	Orange		

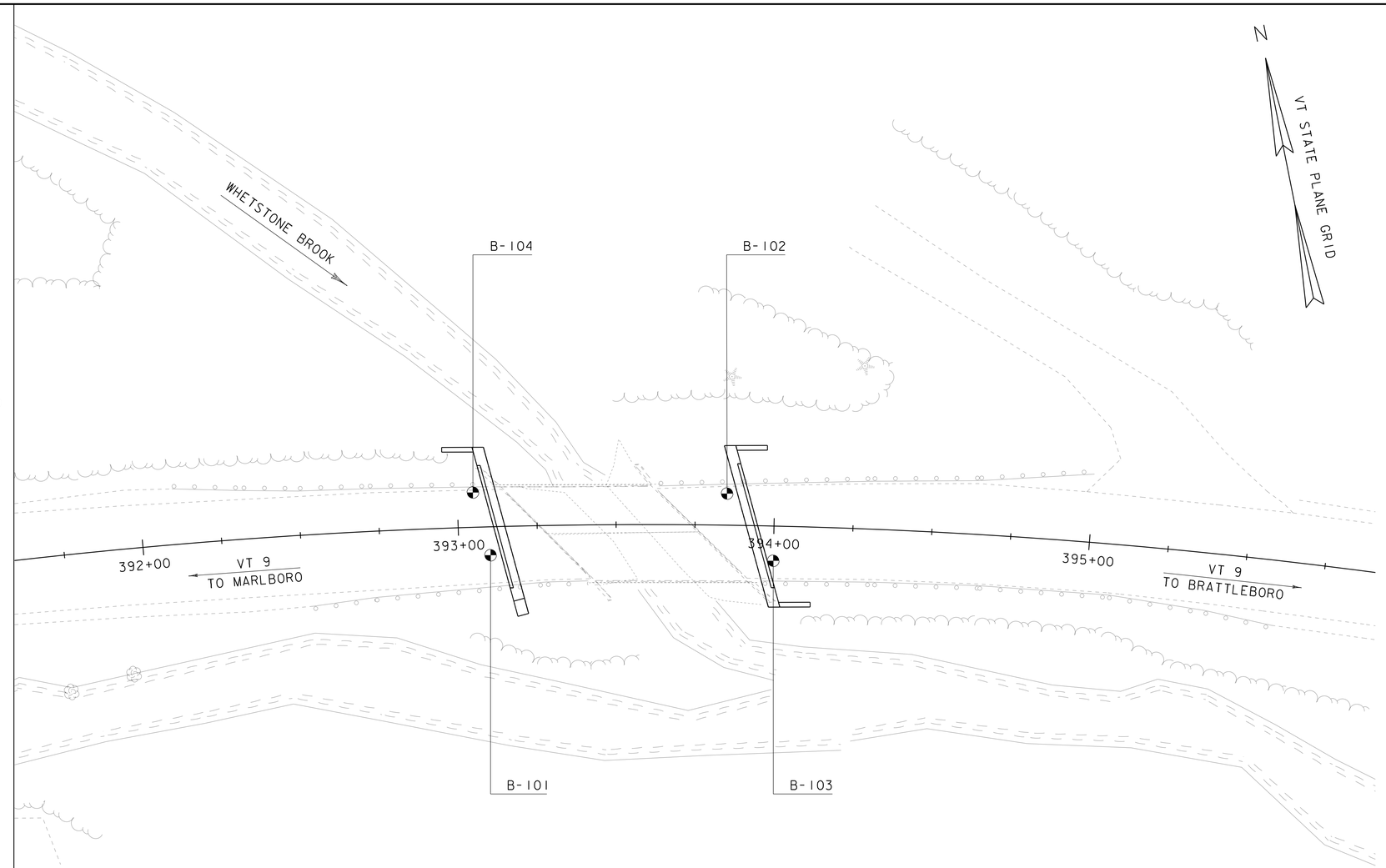

BORING LAYOUT SHEET

SCALE 1" = 20'-0"

20 0 20

DEFINITIONS (AASHTO)

BEDROCK (LEDGE) - Rock in its native location of indefinite thickness.

BOULDER - A rock fragment with an average dimension > 12 inches.

COBBLE - Rock fragments with an average dimension between 3 and 12 inches.

GRAVEL - Rounded particles of rock < 3" and > 0.0787" (#10 sieve).

SAND - Particles of rock < 0.0787" (#10 sieve) and > 0.0029" (#200 sieve).

SILT - Soil < 0.0029" (#200 sieve), non or slightly plastic and exhibits no strength when air-dried.

CLAY - Fine grained soil, exhibits plasticity when moist and considerable strength when air-dried.

VARVED - Alternate layers of silt and clay.

HARDPAN - Extremely dense soil, cemented layer, not softened when wet.

MUCK - Soft organic soil (containing > 10% organic material.

MOISTURE CONTENT - Weight of water divided by dry weight of soil.

FLOWING SAND - Granular soil so saturated (loose) that it flows into drill casing during extraction of wash rod.

STRIKE - Angle from magnetic north to line of intersection of bed with a horizontal plane.

DIP - Inclination of bed with a horizontal plane.

GENERAL NOTES

1. The subsurface explorations shown herein were made between 7-30-12 and 8-1-12 by Terracon.

2. Soil and rock classifications, properties and descriptions are based on engineering interpretation from available subsurface information by the Agency and may not necessarily reflect actual variations in subsurface conditions that may be encountered between individual boring or sample locations.

3. Observed water levels and/or conditions indicated are as recorded at the time of exploration and may vary according to the prevailing rainfall, methods of exploration and other factors.

4. Engineering judgment was exercised in preparing the subsurface information presented herein. Analysis and interpretation of subsurface data was performed and interpreted for Agency design and estimating purposes. Presentation of the information in the Contract is intended to provide the Contractor access to the same data available to the Agency. The subsurface information is presented in good faith and is not intended as a substitute for personal investigation, independent interpretation, independent analysis or judgment by the Contractor.

5. Pictorial structure details shown on the boring plan layout or soils profile are for illustrative purposes only and may not accurately portray final contract details.

6. Terminology used on boring logs to describe the hardness, degree of weathering, and spacing of fractures, joints and other discontinuities in the bedrock is defined in the AASHTO Manual on Subsurface Investigations, 1988.

7. Northing and Easting coordinates are shown in Vermont State Plane Grid North American Datum 1983 in meters and survey feet.

BORING CHART

HOLE NO.	SURV. STATION	OFFSET	GROUND ELEV.	ELEV. TLOB
B-101	393+10	9' RT	1299.00'	1285.00'
B-102	393+85	10' LT	1298.50'	1283.50'
B-103	394+00	11' RT	1297.00'	1278.00'
B-104	393+05	11' LT	1298.50'	1285.50'

PROJECT NAME: MARLBORO

PROJECT NUMBER: BRF 010-1(43)

FILE NAME: s11b414bor.dgn
PROJECT LEADER: K. HIGGINS
DESIGNED BY: R. KLINEFELTER
BORING LAYOUT SHEET

PLOT DATE: 28-AUG-2013
DRAWN BY: K. FRIEDLAND
CHECKED BY: G. LAROCHE
SHEET 21 OF 50

STATE OF VERMONT
AGENCY OF TRANSPORTATION
MATERIALS & RESEARCH SECTION
SUBSURFACE INFORMATION

BORING LOG

MARLBORO
BRF 010-1 (43)

Boring No.: B-101
Page No.: 1 of 1
Pin No.:
Checked By: LJD

Boring Crew: Geosearch, Inc. Fitchburg, MA, JE
Date Started: 7/30/12 Date Finished: 7/31/12
VTSPG NAD83: N 137719.00 ft E 1588828.00 ft
Station: 393+10 Offset: 9 RT
Ground Elevation: 1,299.0 ft. (approx)

	Casing	Sampler
Type:	HW	SS
I.D.:	4 in	1.38 in
Hammer Wt:	300	140 lb.
Hammer Fall:	24	30 in.
Hammer/Rod Type:	Auto/N	
Rig:	CME 55	CE = 1.3

Groundwater Observations

Date	Depth (ft)	Notes
07/30/12	9.5	

Depth (ft)	Strata (1)	CLASSIFICATION OF MATERIALS (Description)	Run (Dip deg.)	Core Rec. % (RQD %)	Blows/6" (N Value)	Moisture Content %	Gravel %	Sand %	Fines %
		Bituminous concrete, 0.0 ft – 0.5 ft							
		A-1-a, GrSaSi, gray, Rec. = 1.2 ft, (Fill)			11-17-18 (35)	1.0	54.2	33.7	12.1
		A-1-b, GrSaSi, gry-brn, Rec. = 1.3 ft, (Fill)			11-14-12-12 (26)	5.0	44.7	42.9	12.4
5		A-1-b, SaGrSi, gry-brn, Rec. = 1.0 ft, (Fill)			23-14-11-8 (25)	9.2	40.9	43.2	15.9
		A-4, SaSiGr, brn Rec. = 1.7 ft				31.6	14.2	44.5	41.3
		A-1-a, GrSaSi, brn			5-11-13-11 (24)	9.1	55.8	34.6	9.6
		A-1-a, GrSaSi, brn, Rec. = 1.5 ft			8-16-19-23 (35)	8.3	63.0	27.5	9.5
10		A-1-b, GrSaSi, brn, Rec. = 1.3 ft			20-26-29-46 (55)	6.9	53.3	31.6	15.1
		12.0 ft – 14.0 ft, Highly weathered bedrock Rec = 0.3 ft			62/6" (62+)				
15		14.0 ft – 17.5 ft, NXDC, Hard, fresh, dark gray, medium grained QUARTZITE, primary joints low angle, closely spaced (possible boulder).	1 (10-30)	88 (15.5)					
		17.5 ft – 19.0 ft, Hard, fresh light gray, fine grained, QUARTZITE, primary joints low angle, moderately spaced.							
20		19.0 ft – 24.0 ft, NXDC, Hard, fresh light gray, fine grained, QUARTZITE, primary joints low angle, widely spaced.	2 (10-30)	97 (76)					
25		24.0 ft – 29.0 ft, NXDC, Hard, fresh light gray, fine grained, QUARTZITE, primary joints low angle, widely spaced. Qu = 9,390 psi (24.4 ft) Qu = 8,950 psi (24.7 ft)	3 (10-30)	95 (95)					
		Hole stopped @ 29.0 ft							

AB #1
BOTTOM OF
PILE CAP
EL 1288.16

AB #1
PILE TIP
EL 1278.16

Notes:
1. Stratification lines represent approximate boundary between material types. Transition may be gradual.
2. N Values have not been corrected for hammer energy. CE is the hammer energy correction factor.
3. Water level readings have been made at times and under conditions stated. Fluctuations of groundwater may occur due to other factors than those present at the time measurements were made.

BORING LOG J112513O.GPJ VERMONT A01.GDT 10/25/12

STATE OF VERMONT
AGENCY OF TRANSPORTATION
MATERIALS & RESEARCH SECTION
SUBSURFACE INFORMATION

BORING LOG

MARLBORO
BRF 010-1 (43)

Boring No.: B-102
Page No.: 1 of 1
Pin No.:
Checked By: LJD

Boring Crew: Geosearch, Inc. Fitchburg, MA, JE
Date Started: 8/01/12 Date Finished: 8/01/12
VTSPG NAD83: N 137775.00 ft E 1588854.00 ft
Station: 393+85 Offset: 10 LT
Ground Elevation: 1,298.5 ft. (approx)

	Casing	Sampler
Type:	HW	SS
I.D.:	4 in	1.38 in
Hammer Wt:	300	140 lb.
Hammer Fall:	24	30 in.
Hammer/Rod Type:	Auto/N	
Rig:	CME 55	CE = 1.3

Groundwater Observations

Date	Depth (ft)	Notes
08/01/12	8.5	

Depth (ft)	Strata (1)	CLASSIFICATION OF MATERIALS (Description)	Run (Dip deg.)	Core Rec. % (RQD %)	Blows/6" (N Value)	Moisture Content %	Gravel %	Sand %	Fines %
		Bituminous concrete, 0.0 ft – 0.5 ft							
		Gravel base, 0.5 ft – 1.0 ft							
		A-1-a, GrSaSi, gry-brn, Rec. = 1.5 ft, (Fill)			6-11-13-21 (24)	2.3	57.4	31.6	11.0
5		A-1-b, GrSaSi, gry-brn, Rec. = 1.7 ft, (Fill)			5-2-2-7 (4)	3.7	47.8	43.1	9.1
10		A-4, SaSiGr, Rec. = 1.5 ft, with roots, wood pieces (Fill)			2-2-52-35 (54)	47.2	13.7	48.7	37.6
		A-4, C-F SAND, some silt, little gravel, brn, very dense							
		13.0 ft – 15.0 ft, Highly weathered bedrock							
15		15.0 ft – 20.0 ft, NXDC, Hard, fresh, gray, fine grained SCHIST, with high angle foliation. Qu = 5,760 psi (16.8 ft) Qu = 3,730 psi (18.6 ft)	1 (60-80)	100 (95)					
20		20.0 ft – 25.0 ft, NXDC, Hard, fresh, gray, fine grained SCHIST, with high angle foliation, primary joint parallel to foliation, widely spaced. Qu = 1,654 psi (21.0 ft) Qu = 1,816 psi (22.2 ft) Qu = 2,430 psi (23.3 ft)	2 (60-80)	100 (87)					
25		Qu = 3,881 PSI (24.6 ft)							
		Hole stopped @ 25.0 ft							

AB #2
BOTTOM OF
PILE CAP
EL 1286.64

AB #2
PILE TIP
EL 1276.64

Notes:
1. Stratification lines represent approximate boundary between material types. Transition may be gradual.
2. N Values have not been corrected for hammer energy. CE is the hammer energy correction factor.
3. Water level readings have been made at times and under conditions stated. Fluctuations of groundwater may occur due to other factors than those present at the time measurements were made.

BORING LOG J112513O.GPJ VERMONT A01.GDT 10/25/12

PROJECT NAME: MARLBORO
PROJECT NUMBER: BRF 010-1(43)

FILE NAME: sllb414bor.dgn
PROJECT LEADER: K. HIGGINS
DESIGNED BY: R. KLINEFLETER
BORING LOGS

PLOT DATE: 28-AUG-2013
DRAWN BY: K. FRIEDLAND
CHECKED BY: G. LAROCHE
SHEET 22 OF 50

STATE OF VERMONT
AGENCY OF TRANSPORTATION
MATERIALS & RESEARCH SECTION
SUBSURFACE INFORMATION

BORING LOG

MARLBORO
BRF 010-1 (43)

Boring No.: B-103
Page No.: 1 of 1
Pin No.:
Checked By: LJD

Boring Crew: Geosearch, Inc. Fitchburg, MA, JE
Date Started: 8/01/12 Date Finished: 8/01/12
VTSPG NAD83: N 137706.00 ft E 1588885.00 ft
Station: 394+00 Offset: 11 RT
Ground Elevation: 1,297.0 ft. (approx)

	Casing	Sampler
Type:	HW	SS
I.D.:	4 in	1.38 in
Hammer Wt:	300	140 lb.
Hammer Fall:	24	30 in.
Hammer/Rod Type:	Auto/N	
Rig:	CME 55	CE = 1.3

Groundwater Observations

Date	Depth (ft)	Notes
08/01/12	10.5	

Depth (ft)	Strata (1)	CLASSIFICATION OF MATERIALS (Description)	Blows/6" (N Value)	Moisture Content %	Gravel %	Sand %	Fines %
		Bituminous concrete, 0.0 ft – 0.5 ft					
		Gravel base, 0.5 ft – 1.0 ft					
		A-1-b, SaGrSi, gray, Rec. = 1.5 ft, (Fill)	10-17-9-11 (26)	3.7	41.0	45.2	13.8
5		A-1-b, SaGrSi, gry-brn, Rec. = 1.0 ft, (Fill)	12-6-8-6 (14)	11.0	44.0	44.2	11.8
10		A-1-b, GrSaSi, gry-brn, Rec. = 1.2 ft	4-6-16-18 (22)	10.0	50.6	34.9	14.5
15		Rec. = 1.3 ft, 15.0 ft – 17.0 ft, Highly weathered bedrock	17-32-46-74 (78)				
20		Hole stopped @ 19.0 ft Auger refusal @ 19.0 ft					
25							

AB #2
BOTTOM OF
PILE CAP
EL 1286.64

AB #2
PILE TIP
EL 1275.00

Notes:
1. Stratification lines represent approximate boundary between material types. Transition may be gradual.
2. N Values have not been corrected for hammer energy. CE is the hammer energy correction factor.
3. Water level readings have been made at times and under conditions stated. Fluctuations of groundwater may occur due to other factors than those present at the time measurements were made.

BORING LOG J1125130.GPJ VERMONT AOT.GDT 10/25/12

STATE OF VERMONT
AGENCY OF TRANSPORTATION
MATERIALS & RESEARCH SECTION
SUBSURFACE INFORMATION

BORING LOG

MARLBORO
BRF 010-1 (43)

Boring No.: B-104
Page No.: 1 of 1
Pin No.:
Checked By: LJD

Boring Crew: Geosearch, Inc. Fitchburg, MA, JE
Date Started: 8/01/12 Date Finished: 8/01/12
VTSPG NAD83: N 137769.00 ft E 1588797.00 ft
Station: 393+05 Offset: 11 LT
Ground Elevation: 1,298.5 ft. (approx)

	Casing	Sampler
Type:	HW	SS
I.D.:	4 in	1.38 in
Hammer Wt:	300	140 lb.
Hammer Fall:	24	30 in.
Hammer/Rod Type:	Auto/N	
Rig:	CME 55	CE = 1.3

Groundwater Observations

Date	Depth (ft)	Notes
08/01/12		NE

Depth (ft)	Strata (1)	CLASSIFICATION OF MATERIALS (Description)	Blows/6" (N Value)	Moisture Content %	Gravel %	Sand %	Fines %
		Bituminous concrete, 0.0 ft – 0.5 ft					
		Gravel base, 0.5 ft – 1.0 ft					
		A-1-a, GrSaSi occasional cobbles/boulders, gry-brn, Rec. = 1.3 ft, (Fill)	5-9-10-13 (19)	1.9	74.7	15.2	10.1
5		Rec. = 0.0 ft, 5.0 ft – 6.0 ft	39-63				
		Note: Drill action suggests frequent cobbles and boulders from 4-11 feet (possible fill)					
10		A1-b, C-F SAND, some gravel, little silt, brn, ocassional cobbles,very dense	65/6"				
		Hole stopped @ 13.0 ft Auger refusal @ 13.0 ft					
15							
20							
25							

AB #1
BOTTOM OF
PILE CAP
EL 1288.16

AB #1
PILE TIP
EL 1278.16

Notes:
1. Stratification lines represent approximate boundary between material types. Transition may be gradual.
2. N Values have not been corrected for hammer energy. CE is the hammer energy correction factor.
3. Water level readings have been made at times and under conditions stated. Fluctuations of groundwater may occur due to other factors than those present at the time measurements were made.

BORING LOG J1125130.GPJ VERMONT AOT.GDT 10/25/12

PROJECT NAME: MARLBORO
PROJECT NUMBER: BRF 010-1(43)

FILE NAME: sllb414bor.dgn
PROJECT LEADER: K. HIGGINS
DESIGNED BY: R. KLINEFELTER
BORING LOGS

PLOT DATE: 28-AUG-2013
DRAWN BY: K. FRIEDLAND
CHECKED BY: G. LAROCHE
SHEET 23 OF 50

NOTES:

1. TEMPORARY BARRIER ANCHOR LOCATIONS SHALL BE LAID OUT BEFORE DECK REINFORCING IS PLACED SO THAT DRILLING FOR ANCHOR BOLTS DOES NOT DAMAGE DECK REINFORCING STEEL.

2. ALL SUPERSTRUCTURE REINFORCING STEEL SHALL MEET THE REQUIREMENTS FOR LEVEL III CORROSION RESISTANCE IN ACCORDANCE WITH SECTION 507.

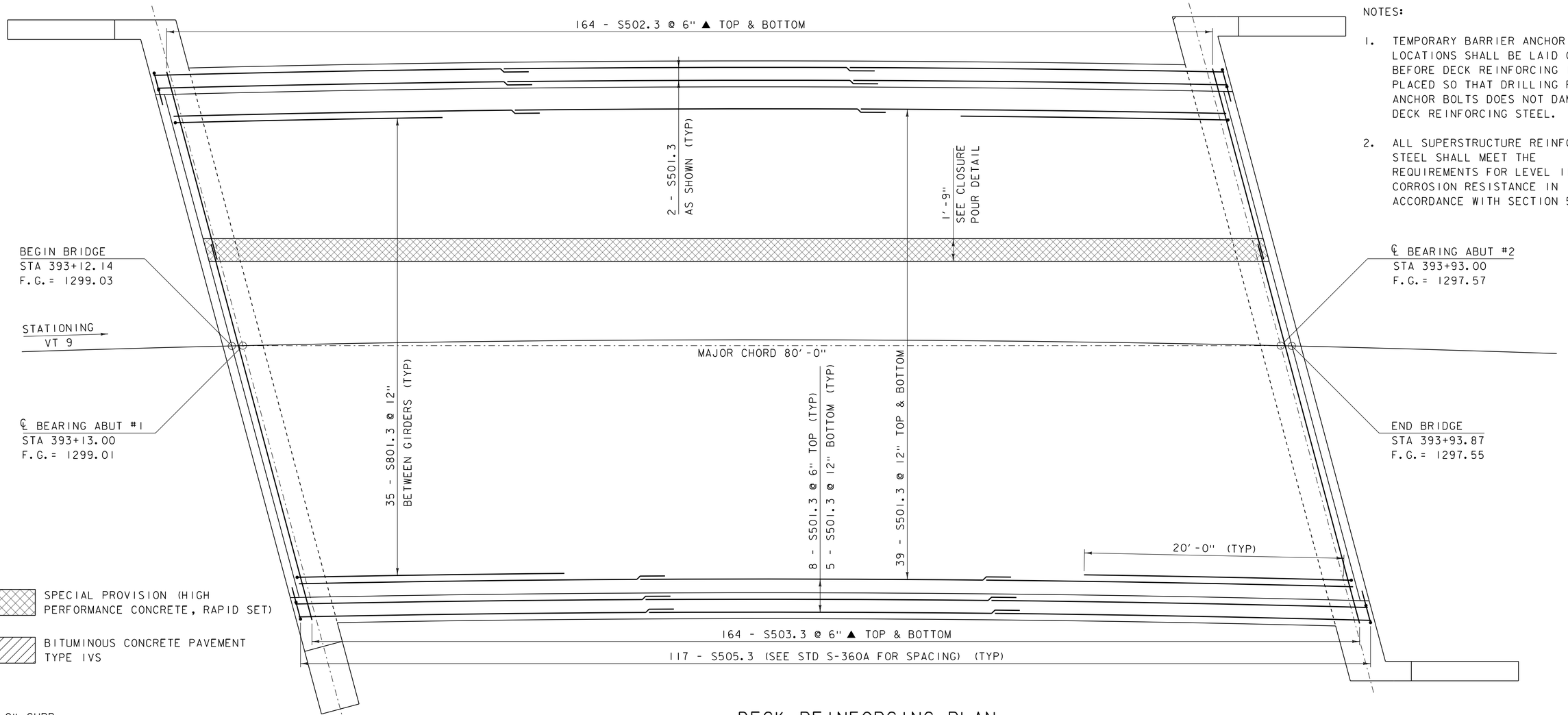

DECK REINFORCING PLAN

SCALE 1/4" = 1'-0"

⚠ SHEET REVISED 5/2/2014.
REPLACES SHEET 24 IN CONTRACT PLANS.

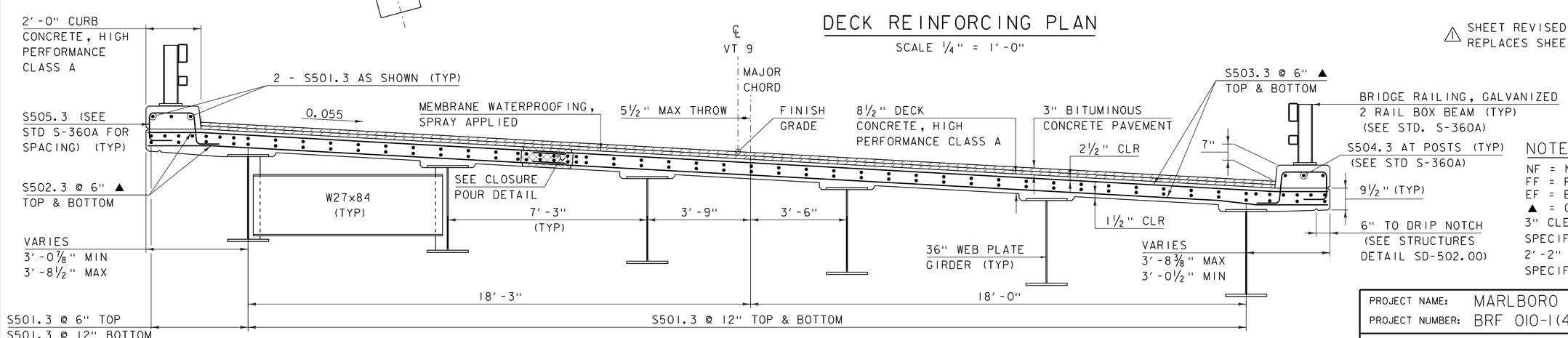

TYPICAL DECK REINFORCEMENT

SCALE 1/2" = 1'-0"

NOTE:

NF = NEAR FACE
FF = FAR FACE
EF = EACH FACE
▲ = CUT TO FIT IN FIELD
3" CLEAR, UNLESS OTHERWISE SPECIFIED ON THE PLANS.
2'-2" BAR LAP UNLESS OTHERWISE SPECIFIED ON THE PLANS.

PROJECT NAME: MARLBORO	
PROJECT NUMBER: BRF 010-1(43)	
FILE NAME: s10b414sup.dgn	PLOT DATE: 02-MAY-2014
PROJECT LEADER: K. HIGGINS	DRAWN BY: R. KLINEFELTER
DESIGNED BY: R. KLINEFELTER	CHECKED BY: J. SALVATORI
DECK REINFORCING PLAN	SHEET 24 OF 50

⚠

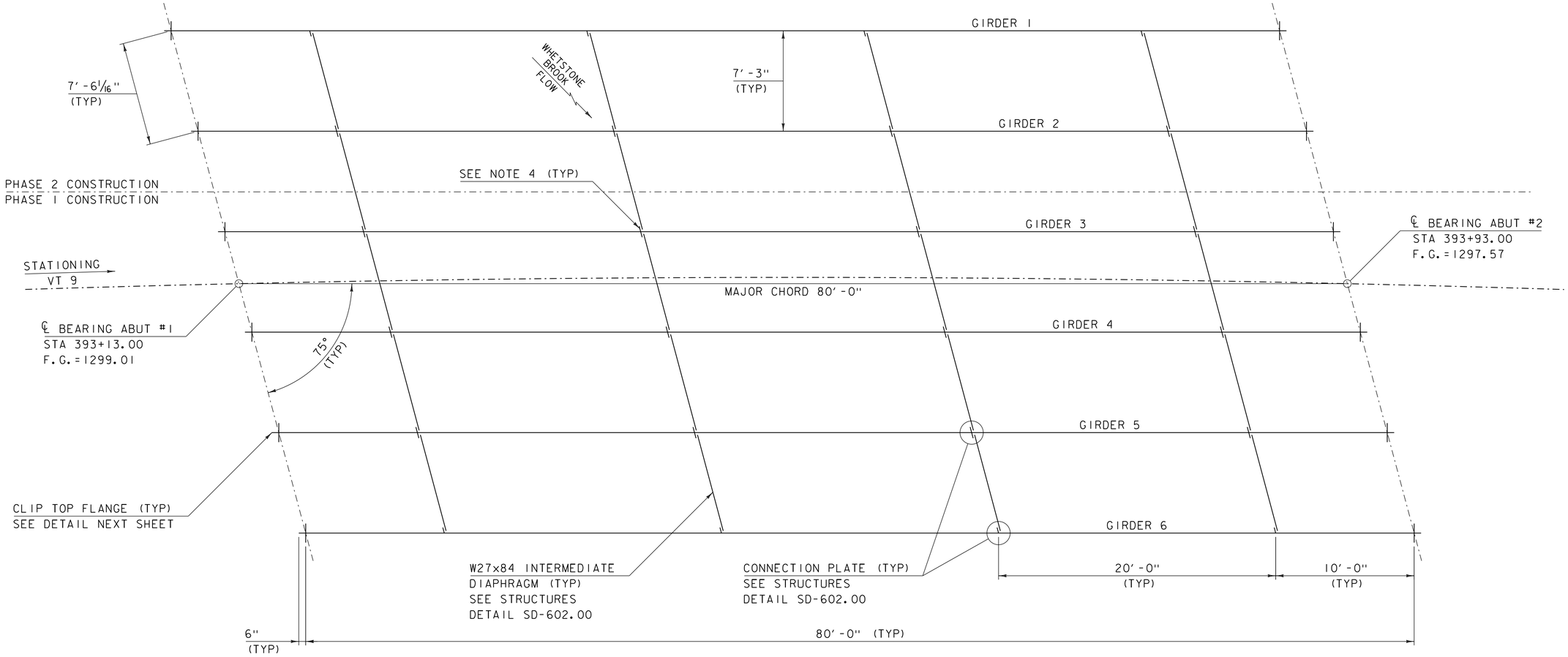

FRAMING PLAN

SCALE 1/4" = 1'-0"

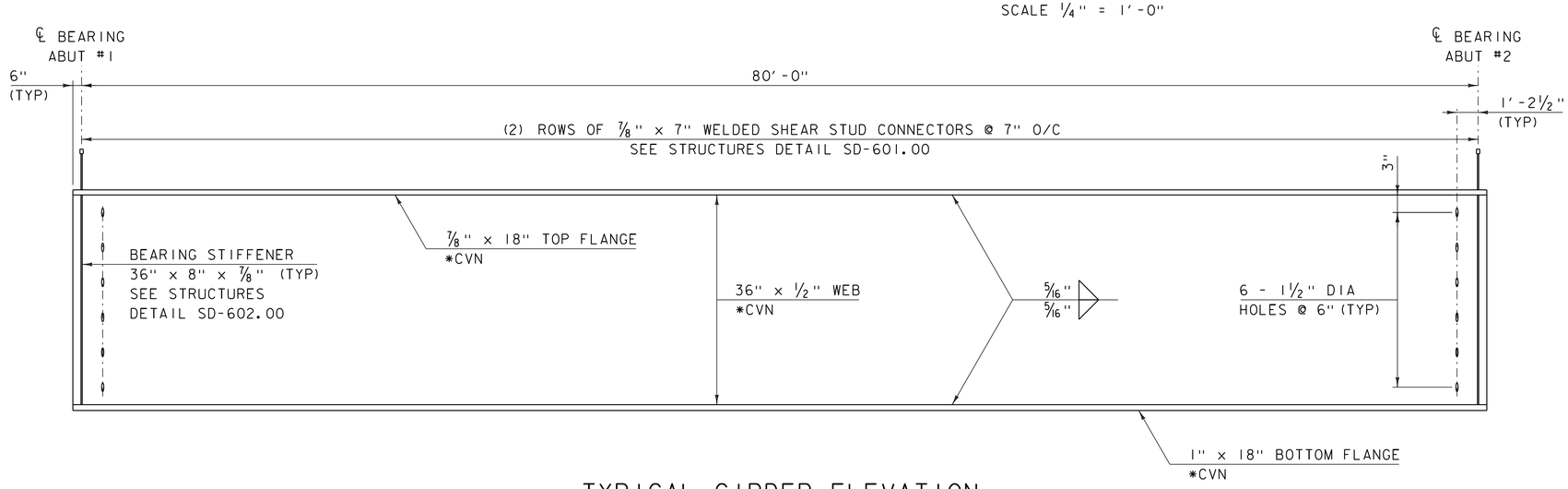

TYPICAL GIRDER ELEVATION

HORIZONTAL SCALE 1/4" = 1'-0"
VERTICAL SCALE 1" = 1'-0"

NOTES:

1. *CVN DENOTES THAT CHARPY V-NOTCH TEST IS REQUIRED.
2. ALL STEEL SHALL BE GRADE 50W.
3. PLACE DRIP PLATE ON LOW END OF EXTERIOR GIRDERS. SEE STRUCTURES DETAIL SD-601.00.
4. BOLT HOLES SHALL BE OMITTED IN THE CONNECTION PLATES ON THE LEFT SIDE OF GIRDER 3. AFTER THE DIAPHRAGMS HAVE BEEN BOLTED TO GIRDER 2, BOLT HOLES IN THE GIRDER 3 CONNECTION PLATES SHALL BE FIELD DRILLED FOR PROPER FITUP.

△1 -SHEET ADDED 4/8/2014.
REPLACES SHEET 25 IN CONTRACT PLANS.

PROJECT NAME: MARLBORO	
PROJECT NUMBER: BRF 010-1(43)	
FILE NAME: s10b414fra.dgn	PLOT DATE: 08-APR-2014
PROJECT LEADER: K. HIGGINS	DRAWN BY: R. KLINEFELTER
DESIGNED BY: R. KLINEFELTER	CHECKED BY: J. SALVATORI
FRAMING PLAN & GIRDER ELEVATION	SHEET 25 OF 50

△1

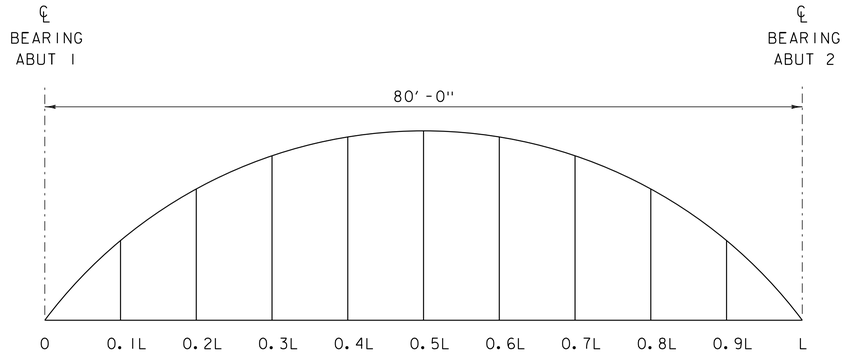

CAMBER DIAGRAM

NOT TO SCALE

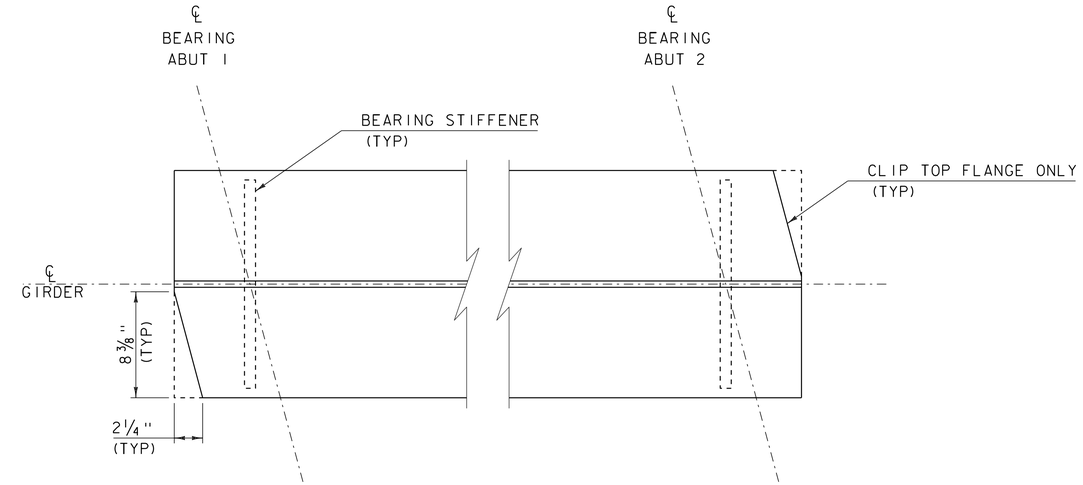

TOP FLANGE CLIP DETAIL

SCALE 1" = 2'-0"

	0	0.1L	0.2L	0.3L	0.4L	0.5L	0.6L	0.7L	0.8L	0.9L	L
Steel Deflection	0	1/8	1/4	3/8	7/16	7/16	7/16	3/8	1/4	1/8	0
Slab & Super Deflection	0	3/4	1 7/16	1 15/16	2 1/4	2 3/8	2 1/4	1 15/16	1 7/16	3/4	0
Total Deflection	0	7/8	1 11/16	2 5/16	2 11/16	2 13/16	2 11/16	2 5/16	1 11/16	7/8	0
Residual Camber	0	3/8	5/8	13/16	15/16	1	15/16	13/16	5/8	3/8	0
Total Camber	0	1 1/4	2 5/16	3 1/8	3 5/8	3 13/16	3 5/8	3 1/8	2 5/16	1 1/4	0

CAMBER AND DEFLECTION

(INCHES)

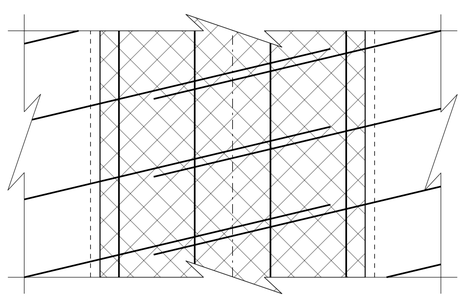

CLOSURE POUR DETAIL PLAN

SCALE 2" = 1'-0"

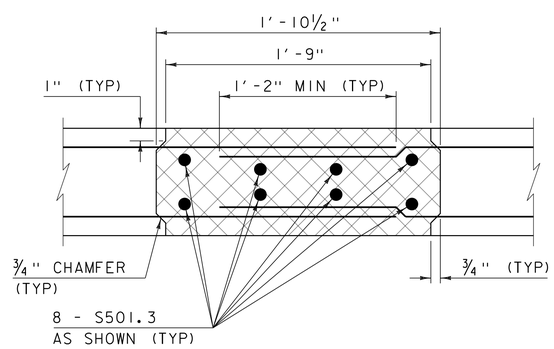

CLOSURE POUR DETAIL SECTION

SCALE 2" = 1'-0"

PHASED DECK CONSTRUCTION NOTES:

1. PHASE 2 DECK CONSTRUCTION INVOLVES ONLY TWO GIRDERS. THE CONTRACTOR SHALL DETERMINE IF ADDITIONAL TEMPORARY BRACING IS NEEDED TO PREVENT LATERAL MOVEMENT OF THE GIRDERS DURING THE PHASE 2 DECK PLACEMENT. IF USED, TEMPORARY BRACING MUST BE DESIGNED TO ALLOW FOR FREEDOM OF VERTICAL MOVEMENT SO THAT GIRDER DEFLECTION DUE TO THE DECK CONCRETE WILL OCCUR AS PREDICTED.

2. FOR PHASE 2 DECK CONSTRUCTION, ALL FORMWORK AND THE FINISHING MACHINE MUST BE COMPLETELY SUPPORTED BY THE PHASE 2 GIRDERS. THE PHASE 1 STRUCTURE SHALL NOT BE USED TO SUPPORT ANY PORTION OF THE FORMWORK OR FINISHING MACHINE.

3. DIAPHRAGMS BETWEEN GIRDERS 2 AND 3 ARE TO BE INSTALLED AFTER THE PHASE 2 DECK CURE PERIOD IS COMPLETE AND BEFORE THE DECK CLOSURE POUR.

4. REINFORCING STEEL IN THE CLOSURE POUR SHALL NOT BE TIED UNTIL AFTER THE PHASE 2 DECK CURE PERIOD IS COMPLETE.

5. FORMWORK FOR SURFACES ON THE DECK THAT WILL BE IN CONTACT WITH THE CLOSURE POUR SHALL BE TREATED WITH CONCRETE SURFACE RETARDER, OR SIMILAR, TO PROVIDE A ROUGHENED SURFACE. THE ROUGHENED SURFACES SHALL BE POWER WASHED WITH WATER PRIOR TO THE CLOSURE POUR.

6. THE METHOD OF FORMING THE DECK CLOSURE POUR SHALL BE DETERMINED BY THE CONTRACTOR. THE FORMS SHALL BE REMOVABLE AND ABLE TO ACCOMMODATE DIFFERENTIAL CAMBER. FORM SUPPORTS SHALL NOT BE ATTACHED TO ANY PART OF THE STRUCTURE BY DRILLING OR SIMILAR MEANS.

△1 -SHEET ADDED 4/8/2014.
REPLACES SHEET 26 IN CONTRACT PLANS.

PROJECT NAME: MARLBORO
PROJECT NUMBER: BRF 010-1(43)

FILE NAME: s10b414sup.dgn
PROJECT LEADER: K. HIGGINS
DESIGNED BY: R. KLINEFELTER
CAMBER & DEFLECTION

PLOT DATE: 08-APR-2014
DRAWN BY: K. FRIEDLAND
CHECKED BY: J. SALVATORI
SHEET 26 OF 50

△1

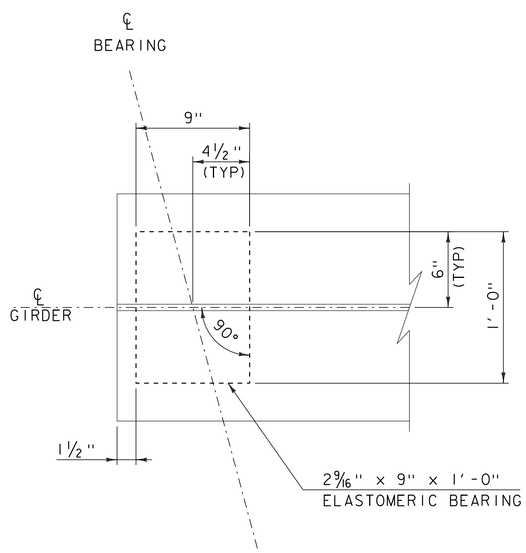

ELASTOMERIC BEARING LAYOUT

SCALE 1" = 2'-0"

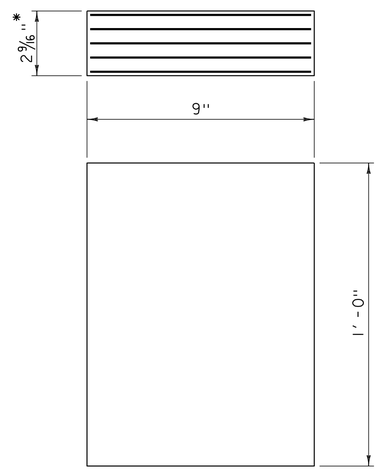

* 2 - ⅛" EXTERIOR LAYERS OF ELASTOMER
4 - ½" INTERIOR LAYERS OF ELASTOMER
5 - 1⁄16" STEEL REINFORCING PLATES

ELASTOMERIC BEARING DETAIL

SCALE 1" = 4'-0"

BEARING NOTES:

1. BEARINGS SHALL CONFORM TO THE APPLICABLE SUBSECTIONS OF SECTIONS 531 AND 731.
2. ALL REINFORCEMENT BETWEEN LAYERS OF ELASTOMER SHALL BE STEEL MEETING THE REQUIREMENTS OF SUBSECTION 714.02. ALL INTERNAL STEEL PLATES SHALL BE SAND BLASTED AND FREE OF COATINGS, RUST AND MILL SCALE. THE PLATES SHALL BE FREE OF SHARP EDGES AND BURRS.
3. STEEL REINFORCED ELASTOMERIC BEARINGS SHALL HAVE A MINIMUM ⅛" EDGE SEAL OF ELASTOMER INTEGRAL WITH BEARING OVER ALL INTERNAL PLATES.
4. THE ELASTOMER WAS DESIGNED WITH A SHEAR MODULUS OF 110 PSI +/- 15%.
5. THE CONCRETE UNDER THE BEARING DEVICE SHALL BE LEVEL.

⚠ -SHEET ADDED 4/8/2014.
REPLACES SHEET 27 IN CONTRACT PLANS.

PROJECT NAME: MARLBORO	
PROJECT NUMBER: BRF 010-1(43)	
FILE NAME: s10b414sup.dgn	PLOT DATE: 08-APR-2014
PROJECT LEADER: K. HIGGINS	DRAWN BY: R. KLINEFELTER
DESIGNED BY: R. KLINEFELTER	CHECKED BY: J. GRIGAS
⚠ BEARING DETAILS	SHEET 27 OF 50

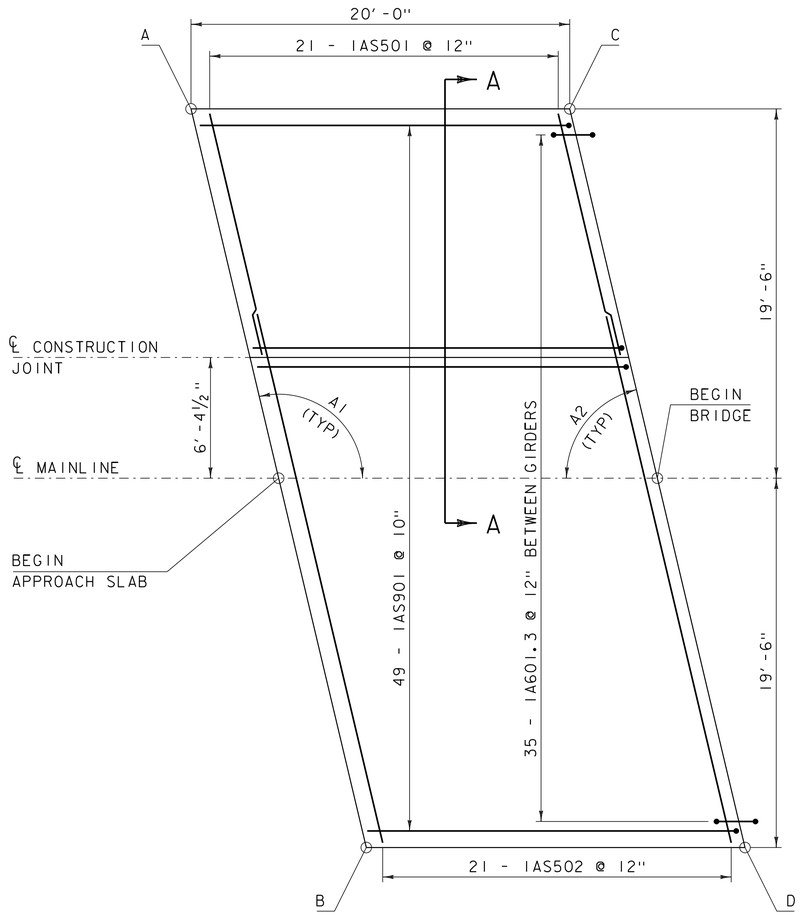

APPROACH SLAB #1 PLAN VIEW

SCALE ¼" = 1'-0"

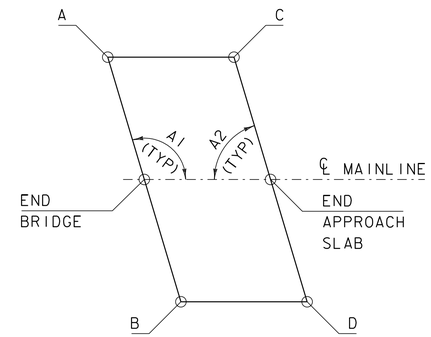

APPROACH SLAB #2 PLAN VIEW

NOT TO SCALE

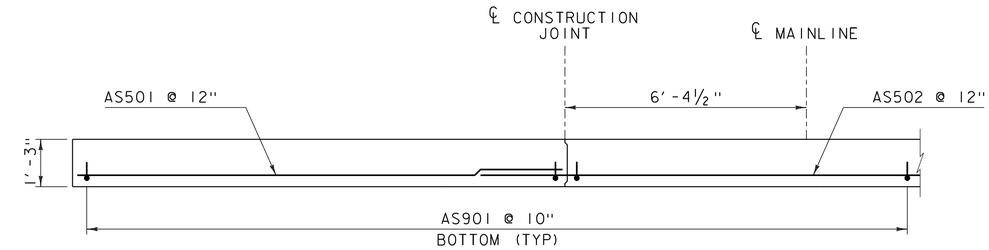

SECTION A-A

SCALE ½" = 1'-0"

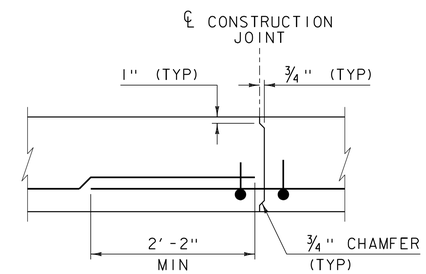

CONSTRUCTION JOINT SECTION

SCALE 1" = 1'-0"

APPROACH SLAB #1			
	STATION	OFFSET	ELEVATION
1A	392+87.68	-19.50	1300.19
BEGIN AS #1	392+92.14	℄	1299.06
1B	392+96.70	19.50	1297.93
1C	393+07.45	-19.50	1299.92
END AS #1	393+12.14	℄	1298.78
1D	393+16.94	19.50	1297.63

APPROACH SLAB #2			
	STATION	OFFSET	ELEVATION
2A	393+88.22	-19.50	1298.49
BEGIN AS #1	393+93.87	℄	1297.30
2B	393+99.65	19.50	1296.11
2C	394+07.98	-19.50	1298.06
END AS #2	394+13.87	℄	1296.86
2D	394+19.89	19.50	1295.65

APPROACH SLAB ELEVATIONS

ALL ELEVATIONS ARE TOP OF SLAB

NOTE:
1. REINFORCING STEEL FOR APPROACH SLAB #1 SHALL BE SIMILAR TO APPROACH SLAB #2.

APPROACH SLAB #1	A1	103°
	A2	77°

APPROACH SLAB #2	A1	107°
	A2	73°

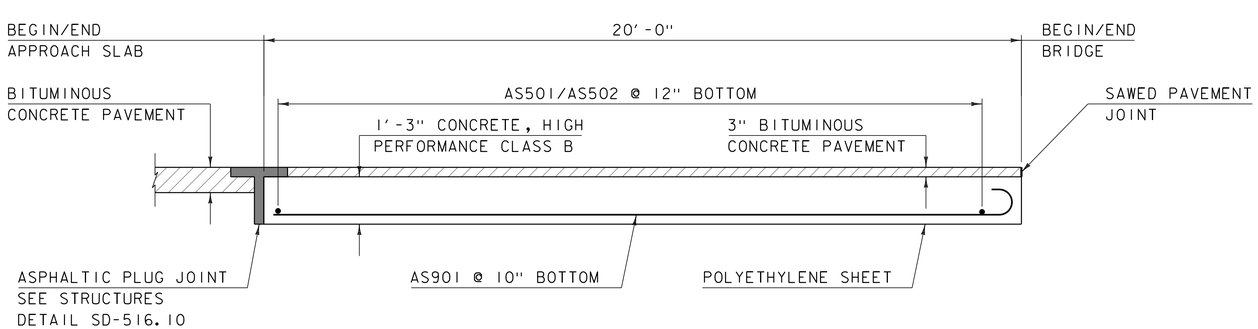

APPROACH SLAB ELEVATION VIEW

SCALE ½" = 1'-0"

NOTE:
NF = NEAR FACE
FF = FAR FACE
EF = EACH FACE
3" CLEAR, UNLESS OTHERWISE SPECIFIED ON THE PLANS.
2'-2" BAR LAP UNLESS OTHERWISE SPECIFIED ON THE PLANS.

⚠ SHEET REVISED 5/2/2014.
REPLACES SHEET 28 IN CONTRACT PLANS.

PROJECT NAME: MARLBORO
PROJECT NUMBER: BRF 010-1(43)

FILE NAME: s10b414apslab.dgn
PROJECT LEADER: K. HIGGINS
DESIGNED BY: R. KLINEFELTER
APPROACH SLAB DETAILS
PLOT DATE: 02-MAY-2014
DRAWN BY: R. KLINEFELTER
CHECKED BY: J. SALVATORI
SHEET 28 OF 50

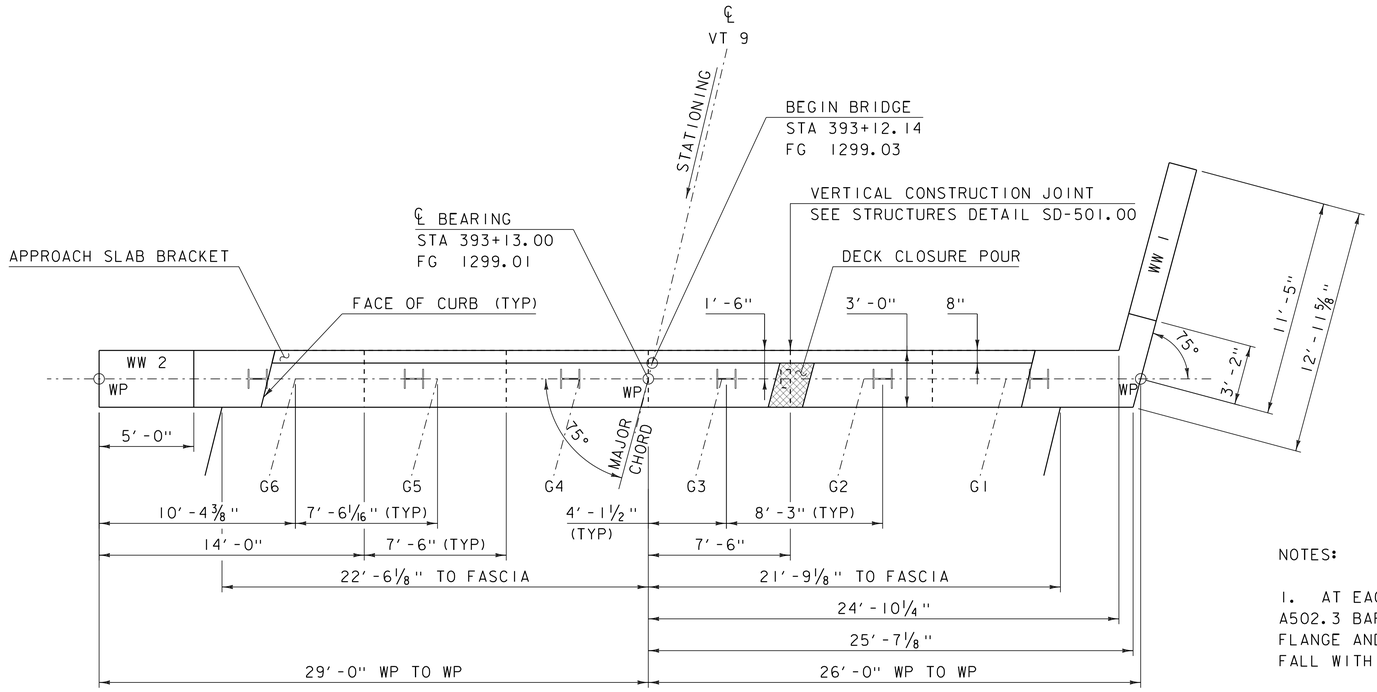

ABUTMENT 1 PLAN

SCALE ¼" = 1'-0"

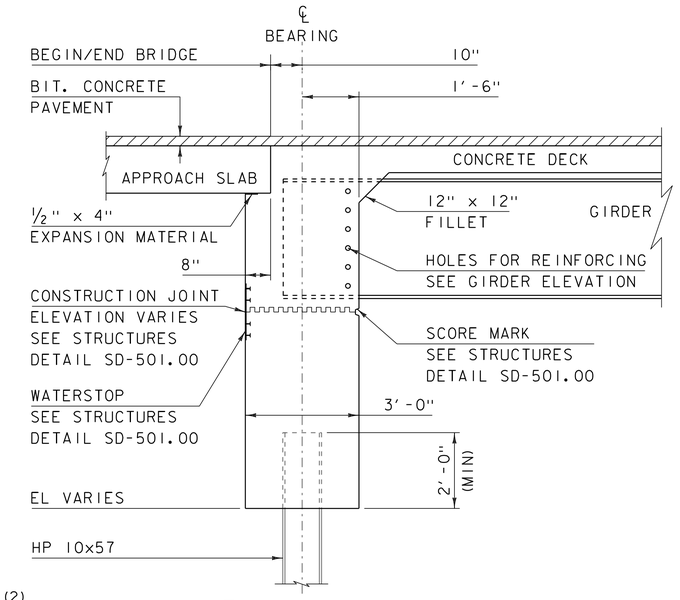

SECTION A-A
ABUTMENT TYPICAL SECTION

SCALE ½" = 1'-0"

NOTES:

1. AT EACH GIRDER LOCATION, BUNDLE (2) A502.3 BARS ON EACH SIDE OF THE GIRDER FLANGE AND OMIT THE (2) A502.3 BARS THAT FALL WITHIN THE WIDTH OF THE FLANGE.

2. TURN THE BOTTOM LEG OF A502.3 AND A801.3 BARS TO CLEAR PILES AS NEEDED.

3. THE CONCRETE IN THE ABUTMENTS AND WINGWALLS ABOVE THE BRIDGE SEAT SHALL BE CONCRETE, HIGH PERFORMANCE CLASS A. ALL OTHER SUBSTRUCTURE CONCRETE SHALL BE CONCRETE, HIGH PERFORMANCE CLASS B.

4. THE BRIDGE PLAQUE FURNISHED BY THE AGENCY SHALL BE CAST INTO WINGWALL #2. SEE STRUCTURES DETAIL SD-502.00 FOR LOCATION AND POSITIONING OF THE BRIDGE PLAQUE.

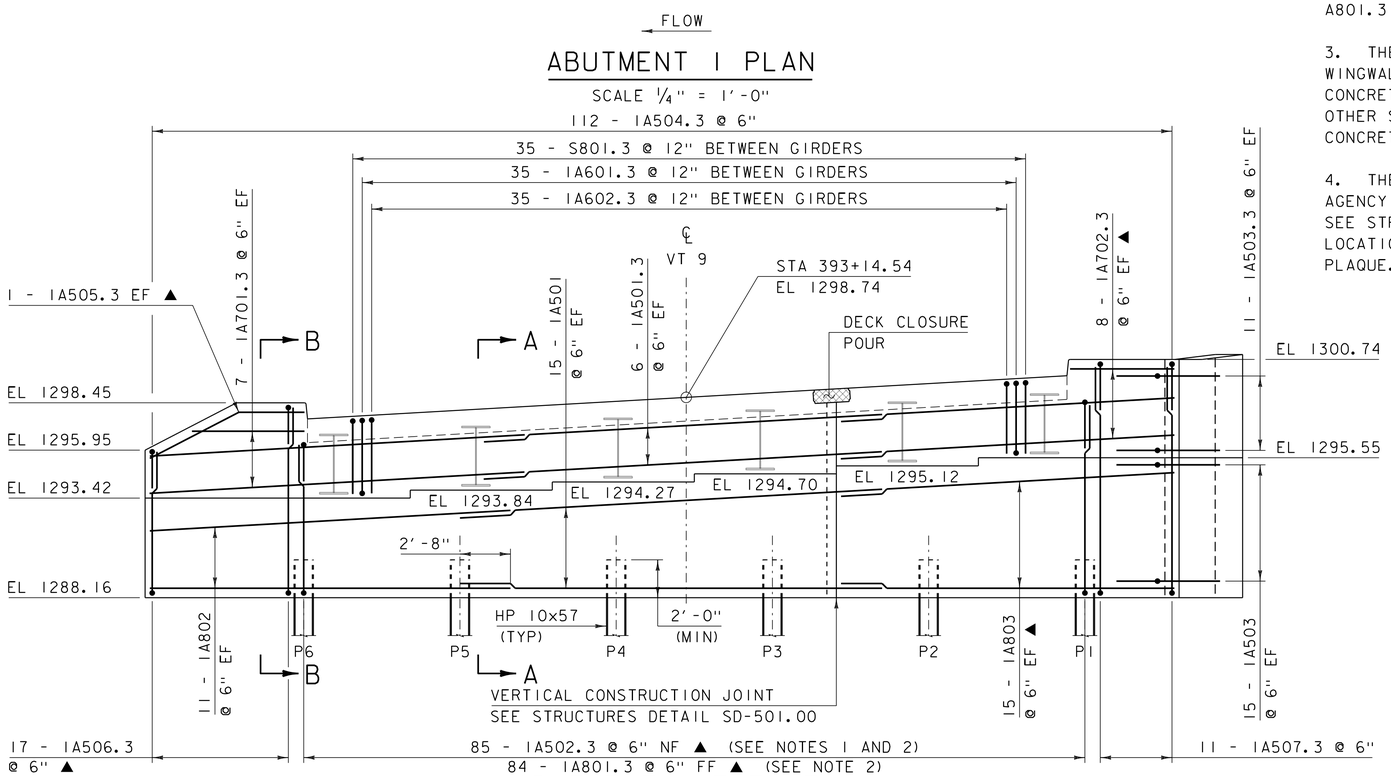

ABUTMENT 1 ELEVATION

SCALE ¼" = 1'-0"

NOTE:

NF = NEAR FACE
FF = FAR FACE
EF = EACH FACE
▲ = CUT TO FIT IN FIELD
3" CLEAR, UNLESS OTHERWISE SPECIFIED ON THE PLANS.
2'-2" BAR LAP UNLESS OTHERWISE SPECIFIED ON THE PLANS.

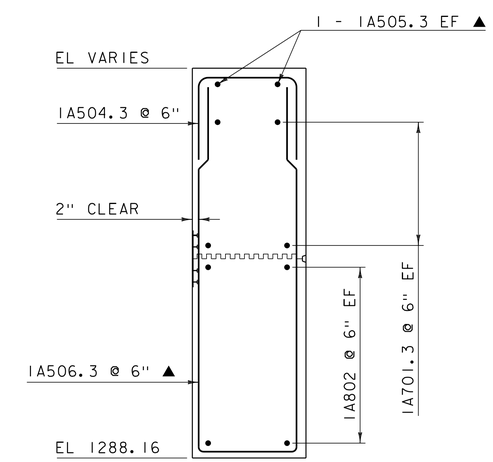

SECTION B-B
WINGWALL 2 REINFORCING TYPICAL

SCALE ½" = 1'-0"

⚠1 -SHEET REVISED 5/7/2014.
REPLACES SHEET 29 IN CONTRACT PLANS.

PROJECT NAME: MARLBORO	
PROJECT NUMBER: BRF 010-1(43)	
FILE NAME: s10414sub_1.dgn	PLOT DATE: 07-MAY-2014
PROJECT LEADER: K. HIGGINS	DRAWN BY: R. KLINEFELTER
DESIGNED BY: R. KLINEFELTER	CHECKED BY: J. SALVATORI
⚠1 ABUTMENT 1	SHEET 29 OF 50

THIS SHEET INTENTIONALLY LEFT BLANK

⚠ -SHEET ADDED 4/25/2014.
REPLACES SHEET 30 IN CONTRACT PLANS.

PROJECT NAME: MARLBORO	
PROJECT NUMBER: BRF 010-1(43)	
FILE NAME: s10414sub_1.dgn	PLOT DATE: 25-APR-2014
PROJECT LEADER: K. HIGGINS	DRAWN BY: R. KLINEFELTER
DESIGNED BY: R. KLINEFELTER	CHECKED BY: J. SALVATORI
⚠ BLANK	SHEET 30 OF 50

THIS SHEET INTENTIONALLY LEFT BLANK

⚠ -SHEET ADDED 4/25/2014.
REPLACES SHEET 31 IN CONTRACT PLANS.

PROJECT NAME: MARLBORO	
PROJECT NUMBER: BRF 010-1(43)	
FILE NAME: s10414sub_1.dgn	PLOT DATE: 25-APR-2014
PROJECT LEADER: K. HIGGINS	DRAWN BY: R. KLINEFELTER
DESIGNED BY: R. KLINEFELTER	CHECKED BY: J. SALVATORI
⚠ BLANK	SHEET 31 OF 50

NOTES:

1. AT EACH GIRDER LOCATION, BUNDLE (2) A502.3 BARS ON EACH SIDE OF THE GIRDER FLANGE AND OMIT THE (2) A502.3 BARS THAT FALL WITHIN THE WIDTH OF THE FLANGE.

2. TURN THE BOTTOM LEG OF A502.3 AND A801.3 BARS TO CLEAR PILES AS NEEDED.

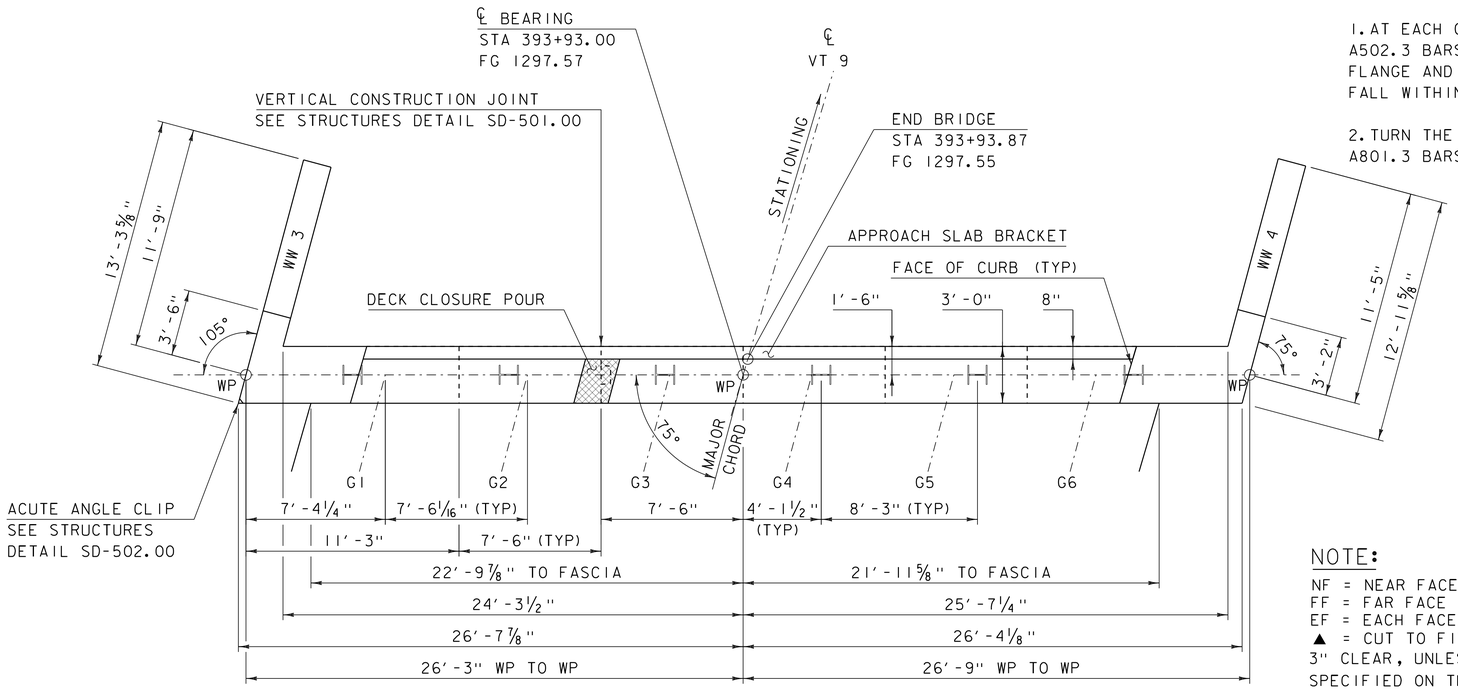

ABUTMENT 2 PLAN

SCALE ¼" = 1'-0"

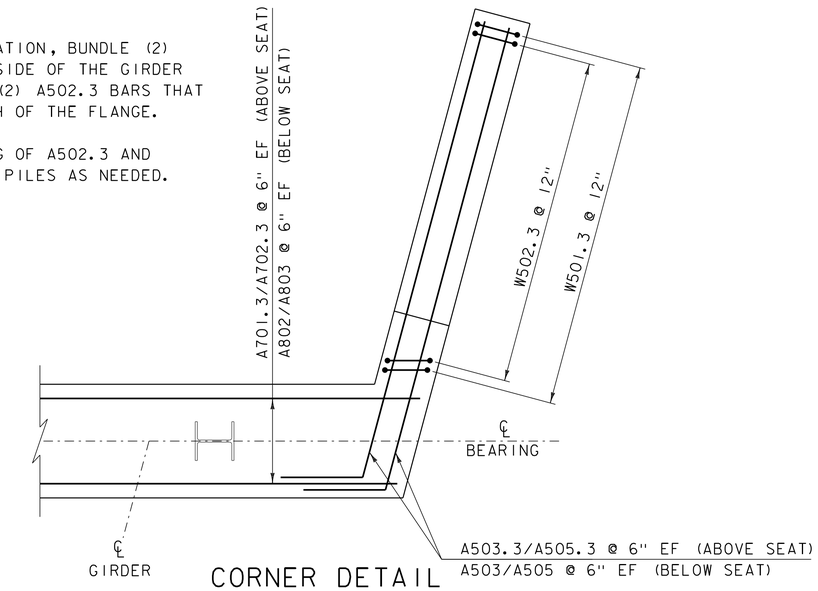

CORNER DETAIL

SCALE ½" = 1'-0"

NOTE:

NF = NEAR FACE
FF = FAR FACE
EF = EACH FACE
▲ = CUT TO FIT IN FIELD
3" CLEAR, UNLESS OTHERWISE SPECIFIED ON THE PLANS.
2'-2" BAR LAP UNLESS OTHERWISE SPECIFIED ON THE PLANS.

FLOW →

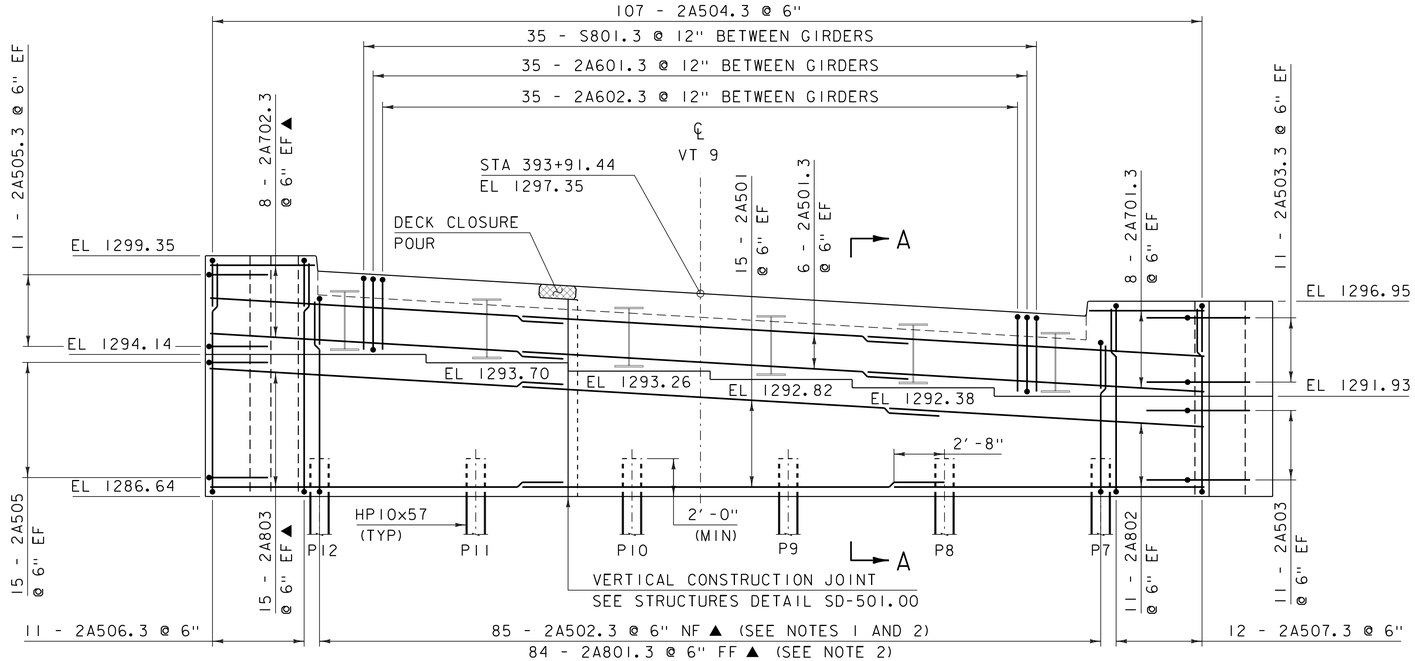

ABUTMENT 2 ELEVATION

SCALE ¼" = 1'-0"

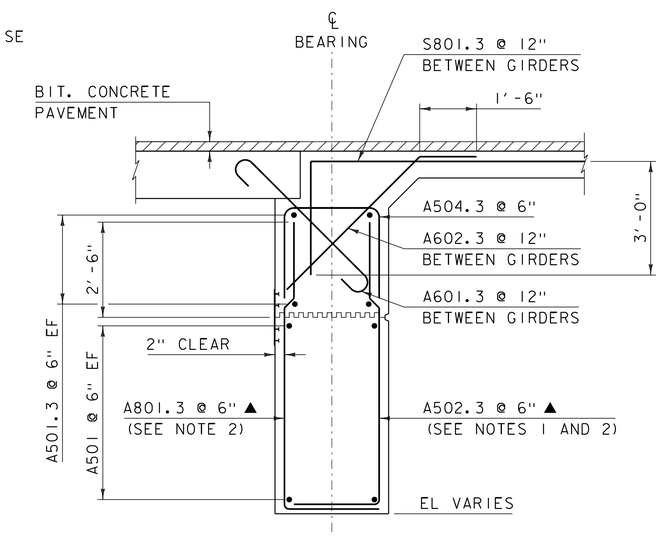

SECTION A-A
ABUTMENT REINFORCING TYPICAL

SCALE ½" = 1'-0"

⚠ -SHEET REVISED 5/7/2014.
REPLACES SHEET 32 IN CONTRACT PLANS.

PROJECT NAME: MARLBORO	
PROJECT NUMBER: BRF 010-1(43)	
FILE NAME: s10414sub_2.dgn	PLOT DATE: 07-MAY-2014
PROJECT LEADER: K. HIGGINS	DRAWN BY: R. KLINEFELTER
DESIGNED BY: R. KLINEFELTER	CHECKED BY: J. SALVATORI
⚠ ABUTMENT 2	SHEET 32 OF 50

STATE OF VERMONT
AGENCY OF TRANSPORTATION

REINFORCING STEEL SCHEDULE

ITEM	EACH	SIZE	LENGTH	MARK	TYPE	A	B	C	D	E	F	G	H	J	K	R	O
	DECK																
	324	5	30'- 0"	S501.3	STR	30'- 0"											
▲	328	5	15'- 9"	S502.3	STR	15'- 9"											
▲	328	5	31'- 2"	S503.3	STR	31'- 2"											
✳	23	5	5'- 0"	S504.3	STR	5'- 0"											
	234	5	5'- 4"	S505.3	S5	0'- 10"	1'- 1"	1'- 5"	1'- 2"			0'- 10"					
✳	71	8	23'- 7"	S801.3	17		3'- 0"	20'- 7"	---								
	APPROACH SLAB #1																
✳	22	5	13'- 3"	1AS501	STR	13'- 3"											
	21	5	28'- 6"	1AS502	STR	28'- 6"											
	49	9	20'- 9"	1AS901	1	1'- 3"	19'- 6"					---		1'- 0"			
	APPROACH SLAB #2																
	21	5	13'- 6"	2AS501	STR	13'- 6"											
	21	5	29'- 0"	2AS502	STR	29'- 0"											
✳	50	9	20'- 9"	2AS901	1	1'- 3"	19'- 6"					---		1'- 0"			
	ABUTMENT #1																
✳	31	5	22'- 1"	1A501	STR	22'- 1"											
	12	5	20'- 10"	1A501.3	STR	20'- 10"											
	14	7	19'- 10"	1A701.3	STR	19'- 10"											
✳ ▲	17	8	18'- 8"	1A702.3	STR	18'- 8"											
	22	8	19'- 1"	1A802	STR	19'- 1"											
✳ ▲	31	9	18'- 8"	1A803	STR	18'- 8"											
	30	5	14'- 11"	1A503	22		2'- 5"	12'- 6"	---				2'- 4"	---	0'- 8"	---	
✳ ▲	86	5	12'- 7"	1A502.3	17		2'- 7"	10'- 0"	---								
	22	5	14'- 11"	1A503.3	22		2'- 5"	12'- 6"	---				2'- 4"	---	0'- 8"	---	
	112	5	7'- 5"	1A504.3	S10		2'- 5"	2'- 7"	2'- 5"								
▲	2	5	9'- 4"	1A505.3	22		5'- 4"	4'- 0"	---				2'- 6"	---	4'- 9"	---	
▲	17	5	22'- 1"	1A506.3	S10		9'- 9"	2'- 7"	9'- 9"								
	11	5	26'- 9"	1A507.3	S10		12'- 1"	2'- 7"	12'- 1"								
✳	36	6	6'- 1"	1A601.3	1	0'- 8"	4'- 9"					0'- 8"		0'- 6"			
✳	36	6	6'- 6"	1A602.3	22		5'- 0"	1'- 6"	---				3'- 6"	---	3'- 6"	---	
✳ ▲	85	8	12'- 7"	1A801.3	17		2'- 7"	10'- 0"	---								
	WINGWALL #1																
	11	5	25'- 3"	1W501.3	S10		12'- 1"	1'- 1"	12'- 1"								
	11	5	6'- 5"	1W502.3	S10		2'- 8"	1'- 1"	2'- 8"								
	ABUTMENT #2																
	30	5	22'- 1"	2A501	STR	22'- 1"											
	12	5	20'- 10"	2A501.3	STR	20'- 10"											
✳	17	7	17'- 6"	2A701.3	STR	17'- 6"											
▲	16	7	18'- 10"	2A702.3	STR	18'- 10"											
✳	23	8	16'- 10"	2A802	STR	16'- 10"											
▲	30	8	18'- 10"	2A803	STR	18'- 10"											
✳	23	5	14'- 11"	2A503	22		2'- 5"	12'- 6"	---				2'- 4"	---	0'- 8"	---	
	30	5	15'- 2"	2A505	27		2'- 5"	12'- 9"					2'- 4"		0'- 8"		
▲	85	5	12'- 8"	2A502.3	17		2'- 7"	10'- 1"	---								
	22	5	14'- 11"	2A503.3	22		2'- 5"	12'- 6"	---				2'- 4"	---	0'- 8"	---	
	107	5	7'- 5"	2A504.3	S10		2'- 5"	2'- 7"	2'- 5"								
	22	5	15'- 2"	2A505.3	27		2'- 5"	12'- 9"					2'- 4"		0'- 8"		
	11	5	26'- 11"	2A506.3	S10		12'- 2"	2'- 7"	12'- 2"								
	12	5	22'- 1"	2A507.3	S10		9'- 9"	2'- 7"	9'- 9"								
✳	36	6	6'- 1"	2A601.3	1	0'- 8"	4'- 9"					0'- 8"		0'- 6"			
✳	36	6	6'- 6"	2A602.3	22		5'- 0"	1'- 6"	---				3'- 6"	---	3'- 6"	---	
✳ ▲	85	8	12'- 8"	2A801.3	17		2'- 7"	10'- 1"	---								
	WINGWALL #3																
	11	5	24'- 11"	3W501.3	S10		11'- 11"	1'- 1"	11'- 11"								
	11	5	6'- 5"	3W502.3	S10		2'- 8"	1'- 1"	2'- 8"								
	WINGWALL #4																
✳	12	5	20'- 3"	4W501.3	S10		9'- 7"	1'- 1"	9'- 7"								
	11	5	6'- 5"	4W502.3	S10		2'- 8"	1'- 1"	2'- 8"								

~ NOTES ~

1. UNLESS OTHERWISE DESIGNATED, ALL BAR REINFORCEMENT FOR CONCRETE IN SIZES UP TO AND INCLUDING NO. 18 SHALL CONFORM TO THE REQUIREMENTS OF THE "SPECIFICATIONS FOR DEFORMED BILLET-STEEL BARS FOR CONCRETE REINFORCEMENT", AASHTO M 31 (ASTM A 615-SI). ALL BARS SHALL BE GRADE 60, UNLESS OTHERWISE DESIGNATED.
2. FOR TYPICAL BENDING DETAILS, RECOMMENDED PIN DIAMETER "D" OF BENDS AND HOOKS, AND OTHER STANDARD PRACTICE, SEE CURRENT CONCRETE REINFORCING STEEL INSTITUTE "MANUAL OF STANDARD PRACTICE".
3. BARS WHICH REQUIRE MORE ACCURATE BENDING THAN STANDARD PRACTICES SHOULD HAVE LIMITS INDICATED.
4. ALL DIMENSIONS ARE OUT TO OUT OF BAR EXCEPT "A" AND "G" ON STANDARD 180 DEGREE AND 135 DEGREE HOOKS.
5. "J" DIMENSION ON 180 DEGREE HOOKS TO BE SHOWN ONLY WHERE NECESSARY TO RESTRICT HOOK SIZE. OTHERWISE, STANDARD HOOKS ARE TO BE USED.
6. "H" DIMENSION ON STIRRUPS TO BE SHOWN ONLY WHEN NECESSARY TO MAINTAIN CLEARANCES.
7. WHERE SLOPE DIFFERS FROM 45 DEGREES, DIMENSIONS "H" AND "K" MUST BE SHOWN.
8. ▲ DENOTES BARS TO BE CUT IN FIELD.
9. ✳ DENOTES ONE EXTRA BAR ADDED FOR TESTING PURPOSES.
10. △ DENOTES TWO EXTRA BARS ADDED FOR TESTING PURPOSES.
11. .3 IN BAR MARK SUFFIX DENOTES LEVEL III REINFORCING STEEL.

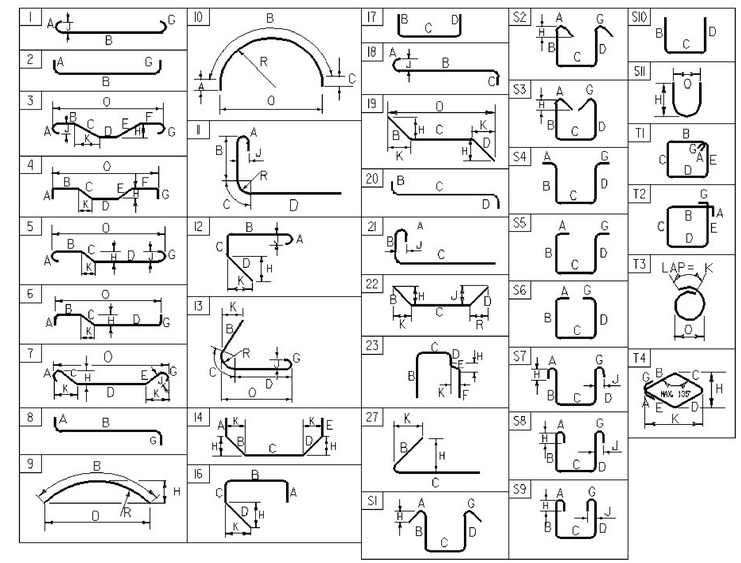

ASTM STANDARD REINFORCING BARS

BAR SIZE DESIGNATION	WEIGHT POUNDS PER FOOT	NOMINAL DIMENSIONS ROUND SECTION		
		DIAMETER INCHES	AREA INCHES ^{2}	PERIMETER INCHES
#3	0.376	0.375	0.11	1.178
#4	0.668	0.500	0.20	1.571
#5	1.043	0.625	0.31	1.963
#6	1.502	0.750	0.44	2.356
#7	2.044	0.875	0.60	2.749
#8	2.670	1.000	0.79	3.142
#9	3.400	1.128	1.00	3.544
#10	4.303	1.270	1.27	3.990
#11	5.313	1.410	1.56	4.430
#14	7.65	1.693	2.25	5.32
#18	13.60	2.257	4.00	7.09

△1 -SHEET ADDED 5/7/2014.
REPLACES SHEET 33 IN CONTRACT PLANS.

PROJECT NAME: **MARLBORO**
PROJECT NUMBER: **BRF 010-1(43)**

FILE NAME: **s10b414rss.dgn** PLOT DATE: **5/7/2014**
PROJECT MANAGER: **K. HIGGINS** DRAWN BY: **R. KLINEFELTER**
DESIGNED BY: **R. KLINEFELTER** CHECKED BY: **J. SALVATORI**
REINFORCING STEEL SCHEDULE SHEET SHEET **33** OF **50**

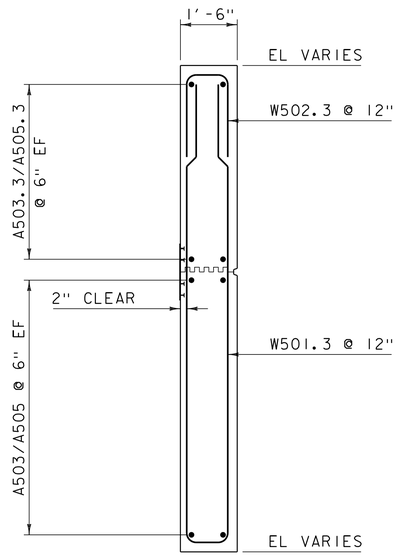

WINGWALL TYPICAL

SCALE ½" = 1'-0"

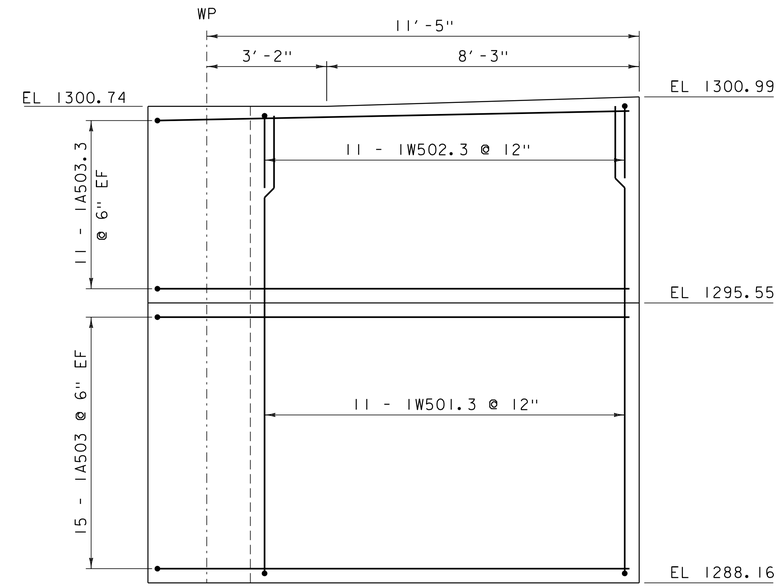

WINGWALL 1 ELEVATION

SCALE ½" = 1'-0"

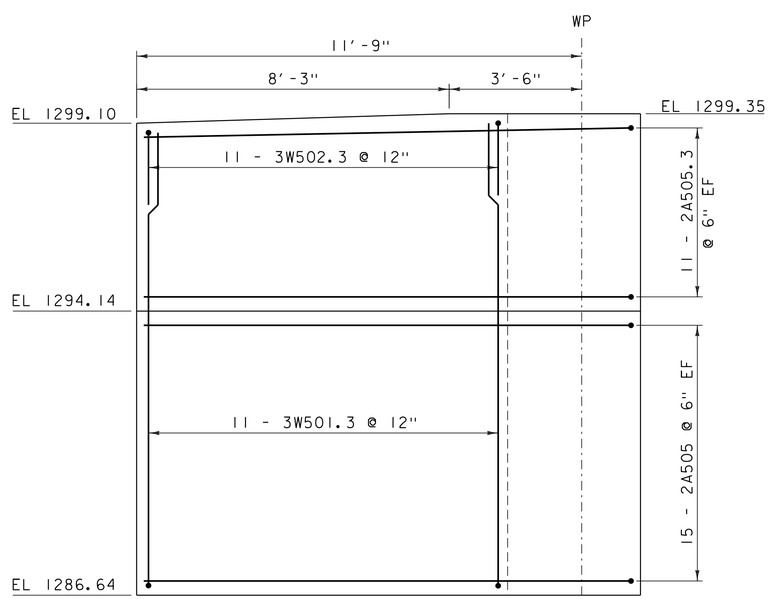

WINGWALL 3 ELEVATION

SCALE ½" = 1'-0"

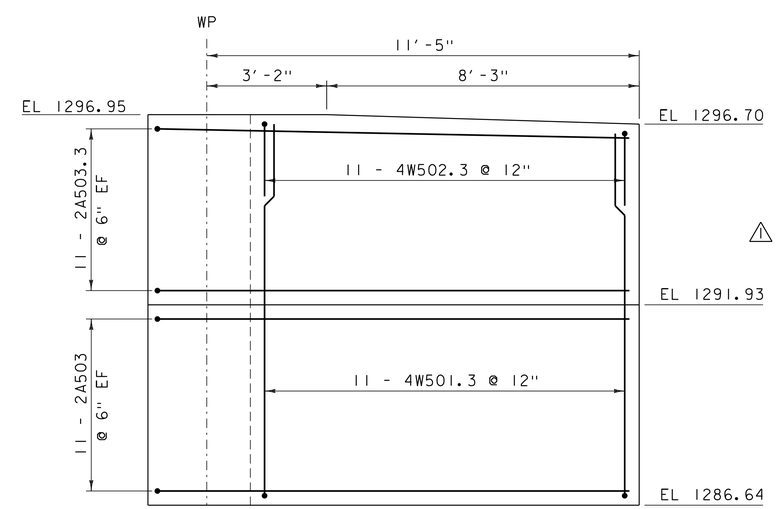

WINGWALL 4 ELEVATION

SCALE ½" = 1'-0"

⚠ -SHEET REVISED 5/6/2014.
REPLACES SHEET 34 IN CONTRACT PLANS.

NOTE:

NF = NEAR FACE
FF = FAR FACE
EF = EACH FACE
3" CLEAR, UNLESS OTHERWISE SPECIFIED ON THE PLANS.
2'-2" BAR LAP UNLESS OTHERWISE SPECIFIED ON THE PLANS.

PROJECT NAME: MARLBORO	
PROJECT NUMBER: BRF 010-1(43)	
FILE NAME: s10414ww.dgn	PLOT DATE: 06-MAY-2014
PROJECT LEADER: K. HIGGINS	DRAWN BY: J. SALVATORI
DESIGNED BY: R. KLINEFELTER	CHECKED BY: R. KLINEFELTER
WINGWALL DETAILS	SHEET 34 OF 50

⚠

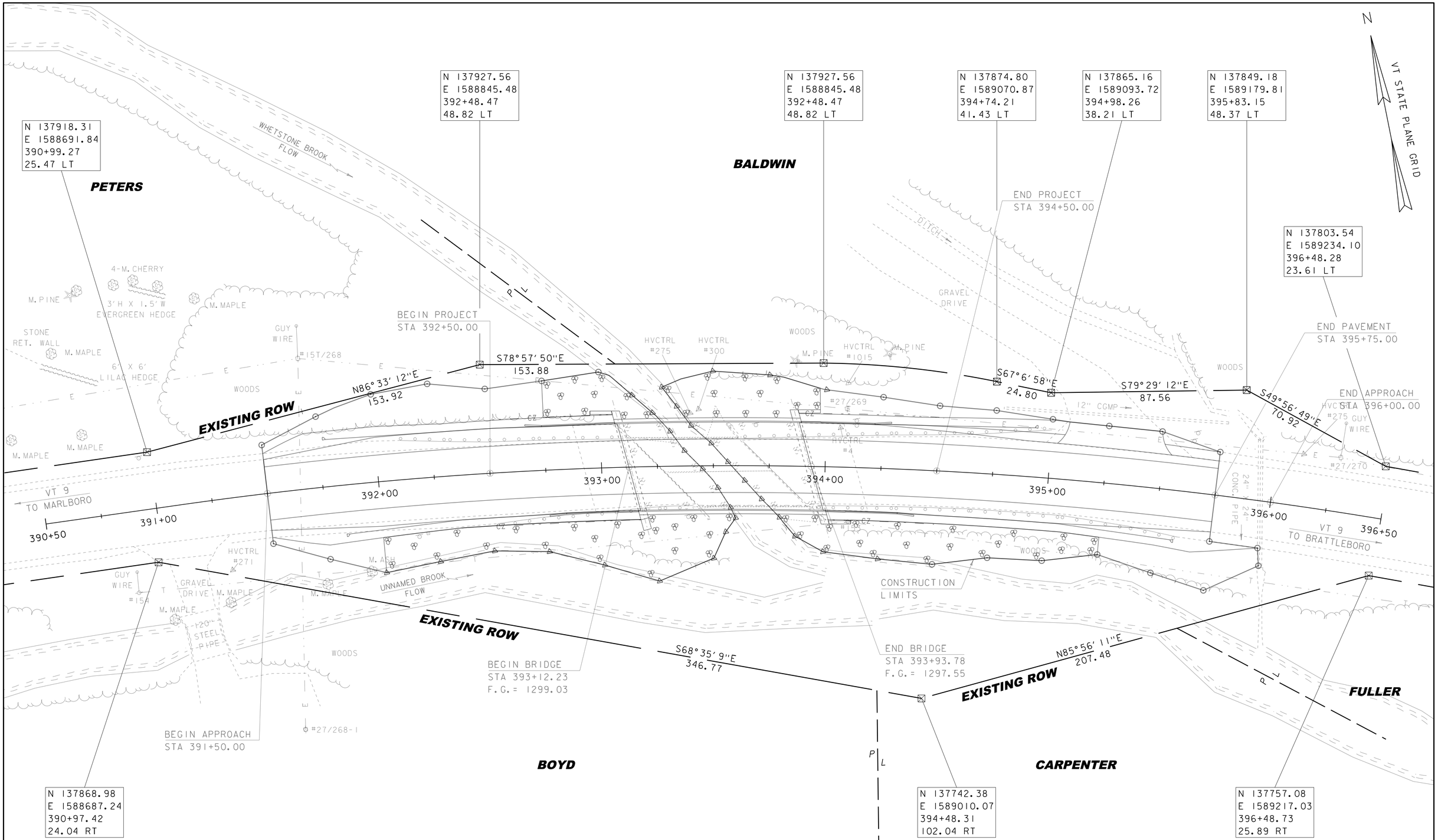

ROW LAYOUT SHEET

20 0 20

SCALE: 1" = 20'-0"

THIS SHEET IS FOR R.O.W. PURPOSES ONLY

PROJECT NAME: MARLBORO	
PROJECT NUMBER: BRF 010-1(43)	
FILE NAME: s10b414row_layout.dgn	PLOT DATE: 28-AUG-2013
PROJECT LEADER: K. HIGGINS	DRAWN BY: K. FRIEDLAND
DESIGNED BY: R. KLINEFELTER	CHECKED BY: J. SALVATORI
ROW LAYOUT SHEET	SHEET 35 OF 50

EPSC PLAN NARRATIVE

1.1 PROJECT DESCRIPTION

THIS PROJECT INVOLVES THE REPLACEMENT OF BRIDGE 48 WITH RELATED ROADWAY APPROACH AND CHANNEL WORK. THE PROJECT LOCATION IS IN THE TOWN OF MARLBORO, VT ON VERMONT ROUTE 9, BEGINNING APPROXIMATELY 0.870 MILES FROM THE MARLBORO AND BRATTLEBORO TOWN LINE. ONE-WAY TRAFFIC WILL BE MAINTAINED ON THE EXISTING ROAD THROUGH THE USE OF PHASED CONSTRUCTION AND TEMPORARY TRAFFIC SIGNALS.

THE NEW PREFABRICATED CONCRETE/STEEL COMPOSITE SUPERSTRUCTURE WILL BE APPROXIMATELY 82 FEET IN LENGTH WITH 118 FEET OF ROADWAY WORK.

NOTE: AREA OF DISTURBANCE INCLUDES LIMITS OF EARTH DISTURBANCE WITHIN THE PROJECT AREA, AS WELL AS WASTE, BORROW AND STAGING AREAS, AND OTHER EARTH DISTURBING ACTIVITIES WITHIN OR DIRECTLY ADJACENT TO THE PROJECT LIMITS AS SHOWN ON THE ATTACHED LAYOUT PLAN.

TOTAL AREA OF DISTURBANCE AS SHOWN ON THE ATTACHED EPSC PLAN IS APPROXIMATELY 0.68 ACRES.

IT IS ANTICIPATED THAT THIS PROJECT WILL BE COMPLETED IN ONE CONSTRUCTION SEASON.

1.2 SITE INVENTORY

1.2.1 TOPOGRAPHY

THE TOPOGRAPHY OF THE AREA IS MOUNTAINOUS, MOSTLY FORESTED WITH SOME OPEN AREAS. VT ROUTE 9 AND TWO GRAVEL DRIVEWAYS ARE WITHIN THE PROJECT SITE. THE IMMEDIATE AREA IS RURAL RESIDENTIAL WITH SEVERAL HOUSES IN THE GENERAL VICINITY OF THE PROJECT. THERE ARE OVERHEAD UTILITIES WHICH MAY HAVE TO BE RELOCATED PRIOR TO CONSTRUCTION.

1.2.2 DRAINAGE, WATERWAYS, BODIES OF WATER, AND PROXIMITY TO NATURAL OR MAN-MADE WATER FEATURES

WHETSTONE BROOK AND A DOWNSTREAM UNNAMED BROOK ARE THE ONLY WATER SOURCES ON THE PROJECT SITE. THE BROOK IS CLASSIFIED AS SINUOUS WITH A STREAM BED CONSISTING OF GRAVEL AND COBBLES. THE TRIBUTARY AREA AT THE BRIDGE CROSSING IS 3.3 SQUARE MILES. AT THE END OF THE PROJECT, THERE IS A 24 INCH CULVERT UNDER THE ROAD WHICH CONVEYS WATER FROM A DITCH TOWARDS THE BROOK. DUE TO THE NATURE OF THE SURROUNDING TERRAIN, RUNOFF WATER ENTERING THE PROJECT SITE WILL BE PRIMARILY LIMITED TO THAT WHICH IS CONVEYED ALONG ROADWAY EMBANKMENT, AND THAT WHICH FOLLOWS VT ROUTE 9 ALONG THE -2.1% GRADE AT THE BEGINNING OF THE PROJECT LIMITS AND -2.6% GRADE AT THE END OF THE PROJECT LIMITS.

1.2.3 VEGETATION

THE VEGETATION IN THE PROJECT AREA CONSISTS OF HARDWOOD TREES, GRASS AND UNDERGROWTH. THE IMPACT TO VEGETATION WILL BE LIMITED TO THAT WHICH IS DIRECTLY AFFECTED BY REPLACEMENT OF THE EXISTING BRIDGE. UPON PROJECT COMPLETION, THE CHANNEL WILL BE ARMORED WITH STONE FILL TYPE III AS SPECIFIED ON THE PLANS. DISTURBED VEGETATION WILL BE REESTABLISHED WITH STANDARD SEED AND MULCH PRACTICES.

1.2.4 SOILS

ALL SOIL DATA CAME FROM THE U.S. DEPARTMENT OF AGRICULTURE SOIL CONSERVATION SERVICE FOR THE COUNTY OF WINDHAM, VERMONT. SOILS ON THE PROJECT SITE ARE 46D BERKSHIRE AND MONADNOCK FINE SANDY LOAM, 15% TO 25% SLOPES, “K FACTOR” = 0.24/0.28 AND 26C WESTBURY FINE SANDY LOAM, 8% TO 15% SLOPES, “K FACTOR” = 0.37. THE SOIL IS CONSIDERED HIGHLY ERODIBLE DUE TO SIGNIFICANT SLOPES.

NOTE: K-VALUES GENERALLY INDICATE THE FOLLOWING:
0.0-0.23 = LOW EROSION POTENTIAL
0.24-0.36 = MODERATE EROSION POTENTIAL
0.37 AND HIGHER = HIGH EROSION POTENTIAL.

1.2.5 SENSITIVE RESOURCE AREAS

CRITICAL HABITATS: NONE.
HISTORICAL AREAS: NONE.
ARCHEOLOGICAL AREAS: NONE.
PRIME AGRICULTURAL LAND: NONE.
THREATENED AND ENDANGERED SPECIES: NONE.
WATER RESOURCE: WHETSTONE BROOK.
WETLANDS: NONE.

1.3 RISK EVALUATION

THIS PROJECT DOES NOT FALL UNDER THE JURISDICTION OF GENERAL PERMIT 3-9020 FOR STORMWATER RUNOFF FROM CONSTRUCTION SITES. SHOULD CHANGES PRIOR TO OR DURING CONSTRUCTION RESULT IN ONE OR MORE ACRES OF EARTH DISTURBANCE OR SHOULD THE PROJECT BECOME PART OF A LARGER PLAN OF DEVELOPMENT, THE CONTRACTOR WILL BE RESPONSIBLE FOR ANY ADDITIONAL PERMITTING.

1.4 EROSION PREVENTION AND SEDIMENT CONTROL

THE EROSION CONTROL PLANS ARE MEANT AS A GUIDELINE FOR PREVENTING EROSION AND CONTROLLING SEDIMENT TRANSPORT. THE PRINCIPLES OUTLINED IN THIS NARRATIVE CONSIST OF APPLYING MEASURES THROUGHOUT CONSTRUCTION OF THE PROJECT IN ORDER TO MINIMIZE SEDIMENT TRANSPORT TO THE RECEIVING WATERS. THE MEASURES INCLUDE STABILIZATION AND STRUCTURAL PRACTICES, STORM WATER CONTROLS AND OTHER POLLUTION PREVENTION PRACTICES. THEY HAVE BEEN PROPOSED BY THE DESIGNER AS A BASIS FOR PROTECTING RESOURCES AND WILL NEED TO BE BUILT UPON BASED ON THE SPECIFIC MEANS AND METHODS OF THE CONTRACTOR. REFER TO THE LOW RISK SITE HANDBOOK FOR SPECIFIC GUIDANCE AND CONSTRUCTION DETAILING.

ALL MEASURES SHALL BE REGULARLY MAINTAINED AND SHALL BE CHECKED FOR SEDIMENT BUILD-UP. SEDIMENT SHALL BE DISPOSED OF AT AN APPROVED SITE WHERE IT WILL NOT BE SUBJECT TO EROSION.

1.4.1 MARK SITE BOUNDARIES

SITE BOUNDARIES AND AREAS CONSTRUCTION EQUIPMENT CAN ACCESS SHALL BE DELINEATED.

PROJECT DEMARCATION FENCING (PDF) SHALL BE USED TO PHYSICALLY MARK SITE BOUNDARIES.

1.4.2 LIMIT DISTURBANCE AREA

PREVENTING INITIAL SOIL EROSION BY MINIMIZING THE EXPOSED AREA IS MUCH MORE EFFECTIVE THAN TREATING ERODED SEDIMENT. EARTH DISTURBANCE CAN BE MINIMIZED THROUGH CONSTRUCTION PHASING BY ONLY OPENING UP EARTH AS NECESSARY. THIS CAN LIMIT THE AREA THAT WILL BE DISTURBED AND EXPOSED TO EROSION. EMPLOY TEMPORARY CONSTRUCTION STABILIZATION PRACTICES IN INCREMENTAL STAGES AS PHASES CHANGE. FOR PROJECTS WHICH FALL UNDER THE CONSTRUCTION GENERAL PERMIT, ONLY THE ACREAGE LISTED ON THE PERMIT AUTHORIZATION MAY BE EXPOSED AT ANY GIVEN TIME.

MAINTAINING VEGETATED BUFFERS ALONG STREAM BANKS, WETLANDS OR OTHER SENSITIVE AREAS IS A CRUCIAL EROSION AND SEDIMENT CONTROL MEASURE THAT SHOULD BE ESTABLISHED WHEREVER POSSIBLE.

1.4.3 SITE ENTRANCE/EXIT STABILIZATION

TRACKING OF SEDIMENT ONTO PUBLIC HIGHWAYS SHALL BE MINIMIZED TO REDUCE THE POTENTIAL FOR RUNOFF ENTERING RECEIVING WATERS. INSTALLATION SHALL COINCIDE WITH THE CONTRACTORS PROGRESS SCHEDULE.

FOLLOWING GUIDANCE FROM THE LOW RISK SITE HANDBOOK, THE CONTRACTOR SHALL PROPOSE LOCATIONS FOR STABILIZED CONSTRUCTION ENTRANCES ON THE CONTRACTOR DEVELOPED EPSC PLAN AND ANYWHERE EQUIPMENT WILL BE GOING FROM AREAS OF EXPOSED SOILS TO PAVED SURFACES.

1.4.4 INSTALL SEDIMENT BARRIERS

SEDIMENT BARRIERS SHALL BE UTILIZED TO INTERCEPT RUNOFF AND ALLOW SUSPENDED SEDIMENT TO SETTLE OUT. THEY SHALL BE INSTALLED PRIOR TO ANY UP SLOPE WORK.

FILTER CURTAIN SHALL BE INSTALLED AS PROPOSED ON THE EPSC PLANS PRIOR TO ANY CHANNEL WORK.

FOLLOWING GUIDANCE FROM THE LOW RISK SITE HANDBOOK, THE CONTRACTOR SHALL PROPOSE LOCATIONS FOR SILT FENCE ON THE CONTRACTOR DEVELOPED EPSC PLAN.

1.4.5 DIVERT UPLAND RUNOFF

DIVERSIONARY MEASURES SHALL BE USED TO INTERCEPT RUNOFF FROM ABOVE THE CONSTRUCTION AND DIRECT IT AROUND THE DISTURBED AREA SO THAT CLEAN WATER DOES NOT BECOME MUDDIED WHILE TRAVELING OVER EXPOSED SOILS ON THE CONSTRUCTION SITE.

THE NEED TO DIVERT UPLAND RUNOFF IS NOT ANTICIPATED AT THIS SITE.

1.4.6 SLOW DOWN CHANNELIZED RUNOFF

CHECK STRUCTURES SHALL BE UTILIZED TO REDUCE THE VELOCITY, AND THUS THE EROSIVE POTENTIAL, OF CONCENTRATED FLOW IN CHANNELS.

THE USE OF STONE CHECK DAMS IS NOT ANTICIPATED FOR THIS PROJECT.

1.4.7 CONSTRUCT PERMANENT CONTROLS

PERMANENT STORMWATER TREATMENT DEVICES SHALL BE INSTALLED AS SHOWN ON THE PLANS AND IN ACCORDANCE WITH PERMIT CONDITIONS.

THE USE OF PERMANENT STORMWATER TREATMENT DEVICES IS NOT ANTICIPATED FOR THIS PROJECT.

1.4.8 STABILIZE EXPOSED SOILS DURING CONSTRUCTION

ALL AREAS OF DISTURBANCE MUST HAVE TEMPORARY STABILIZATION IN PLACE WITHIN 48 HOURS OF DISTURBANCE.

SURFACE ROUGHENING OF ALL EXPOSED SLOPES, COMBINED WITH TEMPORARY MULCHING, SHALL BE UTILIZED ON A REGULAR BASIS. BIODEGRADABLE EROSION CONTROL MATTING OR AN EQUIVALENT SHALL BE USED TO STABILIZE ALL SLOPES STEEPER THAN 1:3.

THE FORECAST OF RAINFALL EVENTS SHALL TRIGGER IMMEDIATE PROTECTION OF EXPOSED SOILS.

1.4.9 WINTER STABILIZATION

VARIOUS MEASURES SPECIFIC TO WINTER MAY BE NECESSARY SHOULD THE PROJECT EXTEND INTO WINTER (OCTOBER 15 THROUGH APRIL 15). REFER TO THE LOW RISK SITE HANDBOOK FOR GUIDANCE.

1.4.10 STABILIZE SOIL AT FINAL GRADE

EXPOSED SOIL MUST BE STABILIZED WITHIN 48 HOURS OF REACHING FINAL GRADE.

SEED, MULCH, FERTILIZER AND LIME SHALL BE USED TO ESTABLISH PERMANENT VEGETATION. FOR SLOPES STEEPER THAN 1:3, BIODEGRADABLE EROSION CONTROL MATTING OR AN EQUIVALENT SHALL BE USED INSTEAD OF MULCH.

1.4.11 DE-WATERING ACTIVITIES

DISCHARGE FROM DEWATERING ACTIVITIES THAT FLOWS OFF OF THE CONSTRUCTION SITE MUST NOT CAUSE OR CONTRIBUTE TO A VIOLATION OF THE VERMONT WATER QUALITY STANDARDS.

DEWATERING IS NOT ANTICIPATED AT THIS SITE. IF DEWATERING IS NECESSARY, THE SPECIFIC MEANS FOR TREATMENT OF DISCHARGE SHALL BE PROVIDED BY THE CONTRACTOR.

1.4.12 INSPECT YOUR SITE

INSPECT THE PROJECT SITE BASED ON SPECIAL PROVISION REQUIREMENTS OR CONSTRUCTION GENERAL PERMIT AUTHORIZATION STIPULATIONS.

1.5 SEQUENCE AND STAGING

THIS SECTION WILL BE DEVELOPED BY THE CONTRACTOR USING THE GUIDANCE OUTLINED IN THE VTRANS EPSC PLAN CONTRACTOR CHECKLIST.

1.5.1 CONSTRUCTION SEQUENCE

1.5.2 OFF-SITE ACTIVITIES

IN ADDITION TO THE CONTRACTOR CHECKLIST ANY ACTIVITIES OUTSIDE THE CONSTRUCTION LIMITS SHALL FOLLOW SUBSECTIONS 105.25- 105.29 OF THE STANDARD SPECIFICATIONS FOR CONSTRUCTION.

26C WESTBURY
FINE SANDY LOAMS
WITH 8% TO 15% SLOPES
"K FACTOR" = .37
VERY STONEY

46D BERKSHIRE AND MONADNOCK
FINE SANDY LOAMS
WITH 15%-25% SLOPES
"K FACTOR" = .24 -.28
VERY STONEY

N
VT STATE PLANE GRID

BEGIN PROJECT
STA 392+50.00

END PROJECT
STA 394+50.00

END PAVEMENT
STA 395+75.00

END APPROACH
STA 396+00.00

BEGIN BRIDGE
STA 393+12.23
F.G. = 1299.03

END BRIDGE
STA 393+93.78
F.G. = 1297.55

BEGIN APPROACH
STA 391+50.00

CONSTRUCTION
LIMITS

STONE FILL,
TYPE III
(TYP)

PHASE 1
PHASE 2

390+50
391+00
392+00
393+00
394+00
395+00
396+00
396+50

49+00
51+00.300

BALDWIN
PETERS
BOYD
CARPENTER
FULLER

RIPARIAN BUFFER
EXISTING ROW
FLOOD PLAIN
WHETSTONE BROOK
FLOW
UNNAMED BROOK
FLOW
VT 9
TO MARLBORO
TO BRATTLEBORO
WOODS
GRAVEL
DRIVE
STONE
RET. WALL
6' X 6'
LILAC HEDGE
3' H X 1.5' W
EVERGREEN HEDGE
4-M. CHERRY
M. PINE
M. MAPLE
GUY
WIRE
12" CGMP
24"
CONC
PIPE
20"
STEEL
PIPE
PDF
CZ

NOTES:

1. FOR CLARITY, AREAS TO BE SEEDED AND MULCHED HAVE NOT BEEN INDICATED. HOWEVER, ALL DISTURBED AREAS SHALL BE SEEDED AND MULCHED AS APPLICABLE.

2. EXISTING CONTOURS SHOWN. SEE CROSS SECTIONS FOR FINAL CONDITIONS.

EPSC PLAN

20 0 20

SCALE: 1" = 20'-0"

PROJECT NAME: MARLBORO	
PROJECT NUMBER: BRF 010-1(43)	
FILE NAME: s10b414ero_bdr.dgn	PLOT DATE: 28-AUG-2013
PROJECT LEADER: K. HIGGINS	DRAWN BY: K. FRIEDLAND
DESIGNED BY: R. KLINEFELTER	CHECKED BY: G. LAROCHE
EPSC PLAN	SHEET 37 OF 50

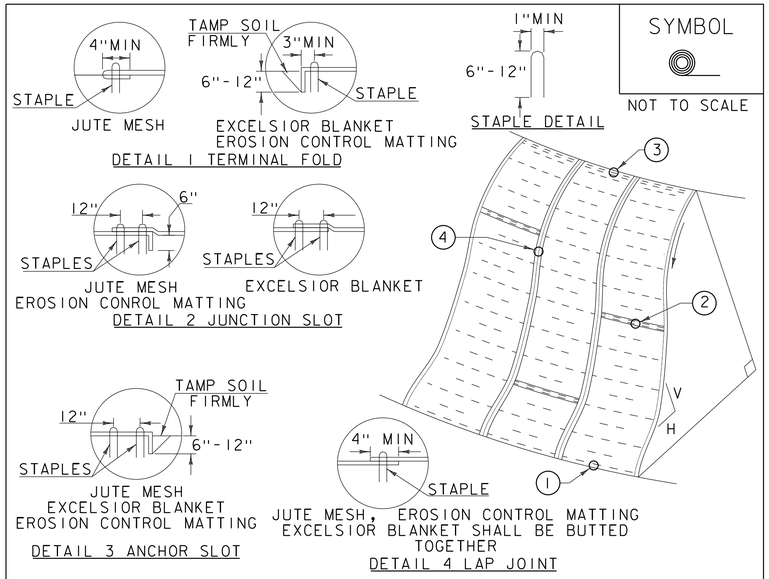

SYMBOL

NOT TO SCALE

CONSTRUCTION SPECIFICATIONS

1. APPLY TO SLOPES GREATER THAN 3H:1V OR WHERE NECESSARY TO AID IN ESTABLISHING VEGETATION.
2. APPLY FERTILIZER, LIME SEED PRIOR TO PLACING MATTING.
3. STAPLES ARE TO BE PLACED ALTERNATELY, IN COLUMNS APPROXIMATELY 2' APART AND IN ROWS APPROXIMATELY 3' APART. APPROXIMATELY 175 STAPLES ARE REQUIRED PER 4'X225' ROLL OF MATERIAL AND 125 STAPLES ARE REQUIRED PER 4'X150' ROLL OF MATERIAL.
4. DISTURBED AREAS SHALL BE SMOOTHLY GRADED. EROSION CONTROL MATERIAL SHALL BE PLACED LOOSELY OVER GROUND SURFACE. DO NOT STRETCH.
5. ALL TERMINAL ENDS AND TRANSVERSE LAPS SHALL BE STAPLED AT APPROXIMATELY 12" INTERVALS.

ADAPTED FROM DETAILS PROVIDED BY: NEW YORK STATE DEC
ORIGINALLY DEVELOPED BY USDA-NRCS
VERMONT DEPARTMENT OF ENVIRONMENTAL CONSERVATION

ROLLED EROSION CONTROL PRODUCT (RECP) SIDE SLOPE

NOTES:
REFER TO "THE VERMONT STANDARDS & SPECIFICATIONS FOR EROSION PREVENTION & SEDIMENT CONTROL -2006- "FROM THE VT AGENCY OF NATURAL RESOURCES FOR ADDITIONAL GUIDANCE.
THIS WORK SHALL BE PERFORMED IN ACCORDANCE WITH SECTION 653 AND AS SHOWN IN THE PLANS FOR TEMPORARY EROSION MATTING (PAY ITEM 653.20) ~~OR PERMANENT EROSION MATTING (PAY ITEM 653.21).~~

REVISIONS	
APRIL 16, 2007	JMF
JANUARY 13, 2009	WHF

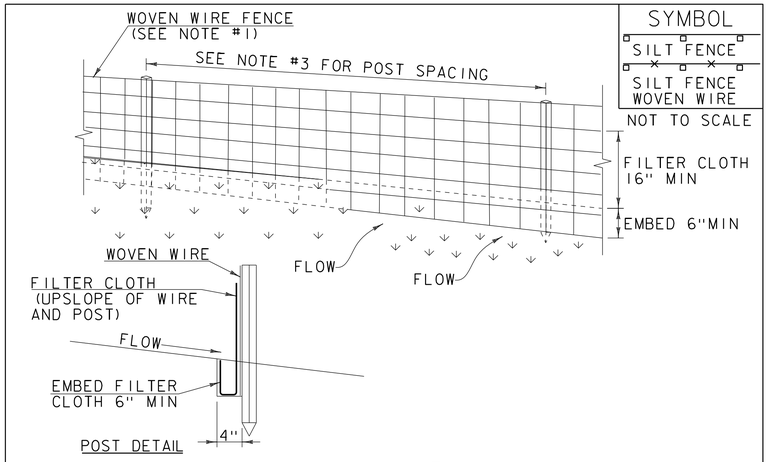

SYMBOL

SILT FENCE

SILT FENCE WOVEN WIRE

NOT TO SCALE

CONSTRUCTION SPECIFICATIONS

1. WOVEN WIRE REINFORCED FENCE IS REQUIRED WITHIN 100' UPSLOPE OF RECEIVING WATERS WHEN THE PROJECT FALLS UNDER A CONSTRUCTION STORMWATER PERMIT. WOVEN WIRE SHALL BE A MIN. 14 GAUGE WITH A 6" MAX. MESH OPENING.
2. FILTER CLOTH SHALL BE EITHER FILTER X, MIRAFI100X, STABILINKA T140N OR APPROVED EQUIVALENT.
3. POST SPACING FOR WIRE-BACKED FENCE SHALL BE 10' MAXIMUM. FOR FILTER-CLOTH FENCE, WHEN ELONGATION IS >50%, POST SPACING SHALL NOT EXCEED 4' AND WHEN ELONGATION IS <50%, POST SPACING SHALL NOT EXCEED 6'.
4. WOVEN WIRE FENCE IS TO BE FASTENED SECURELY TO FENCE POSTS WITH WIRE TIES. FILTER CLOTH IS TO BE FASTENED SECURELY TO WOVEN WIRE FENCE WITH TIES SPACED EVERY 24" AT TOP AND MID SECTION.
5. WHEN TWO SECTIONS OF FILTER CLOTH ADJOIN EACH OTHER THEY SHALL BE OVER-LAPPED BY 6" AND FOLDED.
6. MAINTENANCE SHALL BE PERFORMED AS NEEDED AND MATERIAL REMOVED WHEN SEDIMENT REACHES HALF OF FABRIC HEIGHT.

ADAPTED FROM DETAILS PROVIDED BY: NEW YORK STATE DEC
ORIGINALLY DEVELOPED BY USDA-NRCS
VERMONT DEPARTMENT OF ENVIRONMENTAL CONSERVATION

SILT FENCE

NOTES:
REFER TO "THE VERMONT STANDARDS & SPECIFICATIONS FOR EROSION PREVENTION & SEDIMENT CONTROL -2006- "FROM THE VT AGENCY OF NATURAL RESOURCES FOR ADDITIONAL GUIDANCE.

THIS WORK SHALL BE PERFORMED IN ACCORDANCE WITH SECTION 649 AND AS SHOWN IN THE PLANS FOR GEOTEXTILE FOR SILT FENCE (PAY ITEM 649.51) ~~OR GEOTEXTILE FOR SILT FENCE, WOVEN WIRE REINFORCED (PAY ITEM 649.515).~~

REVISIONS	
MARCH 21, 2008	WHF
DECEMBER 11, 2008	WHF
JANUARY 13, 2009	WHF

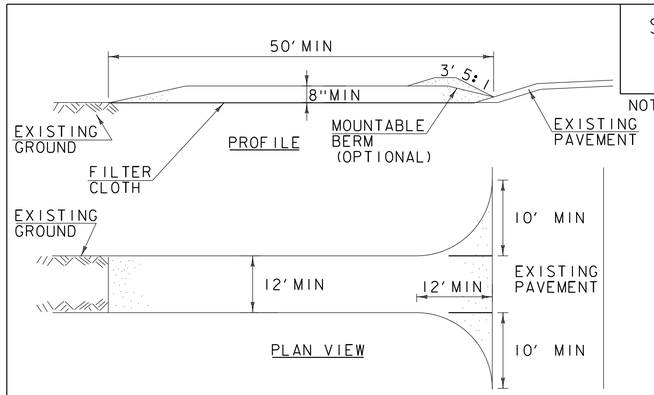

SYMBOL

NOT TO SCALE

CONSTRUCTION SPECIFICATIONS

1. STONE SIZE- USE 1-4" STONE, RECLAIMED OR RECYCLED CONCRETE EQUIVALENT.
2. LENGTH- NOT LESS THAN 50' (EXCEPT ON A SINGLE RESIDENCE LOT WHERE A 30' MINIMUM LENGTH APPLIES).
3. THICKNESS- NOT LESS THAN 8".
4. WIDTH- 12' MINIMUM, BUT NOT LESS THAN THE FULL WIDTH AT POINTS WHERE INGRESS OR EGRESS OCCURS. 24' IF SINGLE ENTRANCE TO SITE.
5. GEOTEXTILE MUST BE PLACED OVER THE ENTIRE AREA PRIOR TO PLACING STONE.
6. SURFACE WATER- ALL SURFACE WATER FLOWING OR DIVERTED TOWARD CONSTRUCTION ENTRANCES SHALL BE PIPED BENEATH THE ENTRANCE. IF PIPING IS IMPRACTICAL, A MOUNTABLE BERM WITH 5:1 SLOPES WILL BE PERMITTED.
7. MAINTENANCE- THE ENTRANCE SHALL BE MAINTAINED IN A CONDITION WHICH WILL PREVENT TRACKING OR FLOWING OF SEDIMENT ONTO PUBLIC RIGHTS-OF-WAY, ALL SEDIMENT SPILLED, DROPPED, WASHED OR TRACKED ONTO PUBLIC RIGHTS-OF-WAY MUST BE REMOVED IMMEDIATELY.
8. WHEN WASHING IS REQUIRED, IT SHALL BE DONE ON AN AREA STABILIZED WITH STONE AND WHICH DRAINS INTO AN APPROVED SEDIMENT TRAPPING DEVICE.
9. PERIODIC INSPECTION AND NEEDED MAINTENANCE SHALL BE PROVIDED ACCORDING TO PERMIT REQUIREMENTS.

ADAPTED FROM DETAILS PROVIDED BY: NEW YORK STATE DEC
ORIGINALLY DEVELOPED BY USDA-NRCS
VERMONT DEPARTMENT OF ENVIRONMENTAL CONSERVATION

STABILIZED CONSTRUCTION ENTRANCE

NOTES:
REFER TO "THE VERMONT STANDARDS & SPECIFICATIONS FOR EROSION PREVENTION & SEDIMENT CONTROL -2006- "FROM THE VT AGENCY OF NATURAL RESOURCES FOR ADDITIONAL GUIDANCE.

THIS WORK SHALL BE PERFORMED IN ACCORDANCE WITH SECTION 653 FOR VEHICLE TRACKING PAD (PAY ITEM 653.35) OR AS SPECIFIED IN THE CONTRACT.

REVISIONS	
MARCH 24, 2008	WHF
JANUARY 13, 2009	WHF

PROJECT NAME: MARLBORO
PROJECT NUMBER: BRF 010-1 (43)

FILE NAME: s10b414ero_det.dgn
PROJECT LEADER: K. HIGGINS
DESIGNED BY: R. KLINEFELTER
EPSC DETAILS 1

PLOT DATE: 28-AUG-2013
DRAWN BY: K. FRIEDLAND
CHECKED BY: G. LAROCHE
SHEET 38 OF 50

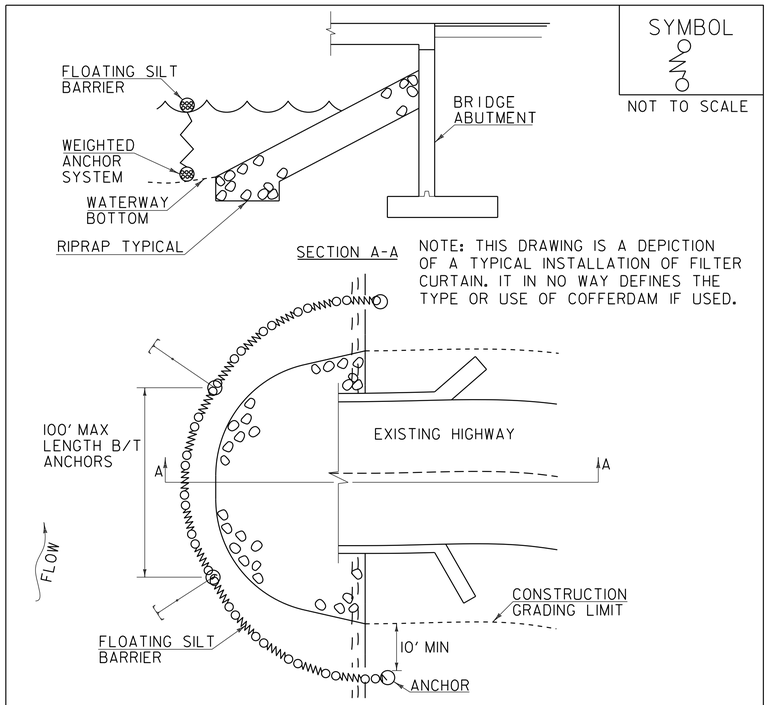

CONSTRUCTION SPECIFICATIONS

1. FILTER CURTAIN SHALL NOT BE PLACED ACROSS A FLOWING WATERWAY, OR IN A WATERWAY WITH STREAM VELOCITIES GREATER THAN 1.5 FEET/SECOND.
2. MAXIMUM 100' LENGTH BETWEEN ANCHORS.
3. LAST SECTION SHALL TERMINATE A MINIMUM OF 10' BEYOND LIMIT OF DISTURBANCE.
4. THE WEIGHTED ANCHOR SYSTEM SHALL BE A TYPE WHICH ALLOWS THE CURTAIN TO CONFORM TO THE BOTTOM OF THE WATERWAY.
5. THE CURTAIN SHALL BE REMOVED BY SLOWLY PULLING TOWARD THE SHORE MINIMIZING THE ESCAPE OF SEDIMENTS INTO WATERWAY.

FILTER CURTAIN

THIS WORK SHALL BE PERFORMED IN ACCORDANCE WITH SECTION 649 FOR GEOTEXTILE FOR FILTER CURTAIN (PAY ITEM 649.61).

REVISIONS	
APRIL 1, 2008	WHF
JANUARY 13, 2009	WHF
SEPTEMBER 4, 2009	WHF

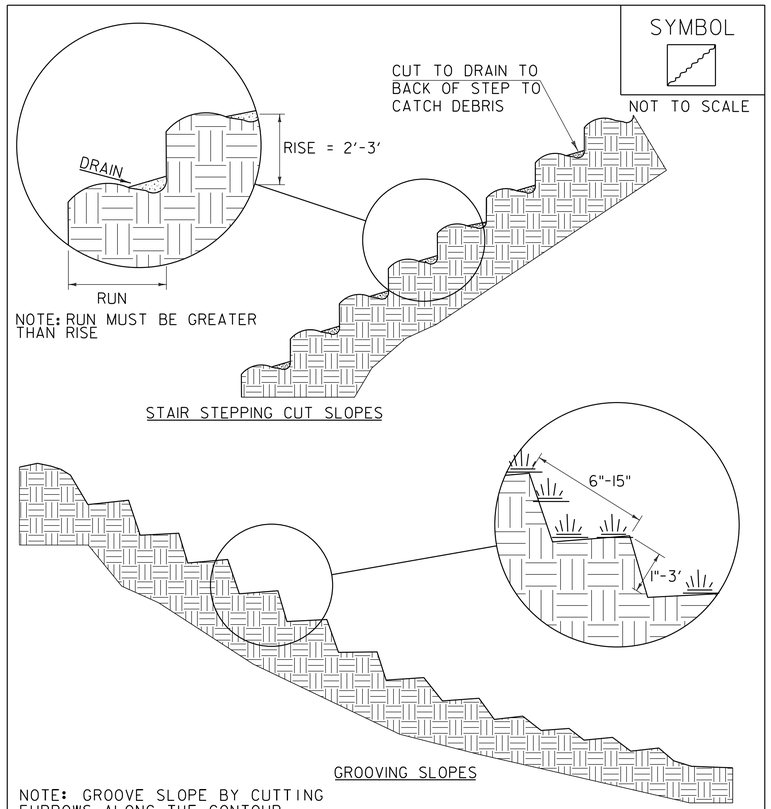

NOTE: GROOVE SLOPE BY CUTTING FURROWS ALONG THE CONTOUR. IRREGULARITIES IN THE SOIL SURFACE CATCH RAINWATER AND RETAIN LIME, FERTILIZER AND SEED.

ADAPTED FROM DETAILS PROVIDED BY: NEW YORK STATE DEC
ORIGINALLY DEVELOPED BY USDA-NRCS
VERMONT DEPARTMENT OF ENVIRONMENTAL CONSERVATION

SURFACE ROUGHENING

NOTES:
REFER TO "THE VERMONT STANDARDS & SPECIFICATIONS FOR EROSION PREVENTION & SEDIMENT CONTROL -2006- " FROM THE VT AGENCY OF NATURAL RESOURCES FOR ADDITIONAL GUIDANCE.

THIS WORK SHALL BE CONSIDERED INCIDENTAL TO THE CONTRACT

REVISIONS	
APRIL 1, 2008	WHF
JANUARY 13, 2009	WHF

VAOT RURAL AREA MIX

	LBS/AC				
% WEIGHT	BROADCAST	HYDROSEED	NAME	GERM %	PURITY %
37.5%	22.5	45	CREEPING RED FESCUE	85%	98%
37.5%	22.5	45	TALL FESCUE	90%	95%
5.0%	3	6	RED TOP	90%	95%
15.0%	9	18	BIRDSFOOT TREFOIL	85%	98%
5.0%	3	6	ANNUAL RYE GRASS	85%	95%
100%	60	120			

VAOT URBAN AREA MIX

	LBS/AC				
% WEIGHT	BROADCAST	HYDROSEED	NAME	GERM %	PURITY %
42.5%	34	68	CREEPING RED FESCUE	85%	98%
10.0%	8	16	PERENNIAL RYE GRASS	90%	95%
42.5%	34	68	KENTUCKY BLUE GRASS	85%	85%
5.0%	4	8	ANNUAL RYE GRASS	85%	95%
100%	80	160			

SOIL AMENDMENT GUIDANCE

FERTILIZER		LIME	
BROADCAST	HYDROSEED	BROADCAST	HYDROSEED
10-20-10	*FOLLOW*	PELLETIZED	*FOLLOW*
500 LBS/AC	*MANUFACTURER*	2 TONS/AC	*MANUFACTURER*

CONSTRUCTION GUIDANCE

1. RURAL SEED MIX: USE AS INDICATED IN THE PLANS AND/OR FOR ALL ESTABLISHED UPLAND (NON WETLAND) AREAS DISTURBED BY THE CONTRACTOR.
2. URBAN SEED MIX: USE AS INDICATED IN THE PLANS AND/OR FOR ALL ESTABLISHED LAWN AREAS DISTURBED BY THE CONTRACTOR.
3. ALL SEED MIXTURES: SHALL NOT HAVE A WEED CONTENT EXCEEDING 0.40% BY WEIGHT AND SHALL BE FREE OF ALL NOXIOUS SEED.
4. FERTILIZER AND LIMESTONE: SHALL FOLLOW RATES SHOWN ON PLAN OR AS DIRECTED BY THE ENGINEER
5. HAY MULCH: TO BE PLACED ON EARTH SLOPES AT THE RATE OF 2 TONS/ACRE, ACHIEVE 90% GROUND COVER OR AS DIRECTED BY THE ENGINEER.
6. TOPSOIL: TO BE USED WITH SEED AS INDICATED ON THE PLANS, OR AS DIRECTED BY THE ENGINEER.
7. HYDROSEEDING: ALTHOUGH GUIDANCE IS GIVEN ABOVE THE SITE CONDITIONS AND THE TYPE OF HYDROSEED WILL ULTIMATELY DICTATE THE AMOUNTS AND TYPES OF SOIL AMENDMENTS TO BE APPLIED
8. TURF ESTABLISHMENT: PLACING SEED, FERTILIZER, LIME AND MULCH PRIOR TO SEPTEMBER 15 AND AFTER APRIL 15 CAN BETTER ENSURE A VIGOROUS GROWTH OF GRASS.

ADAPTED FROM VTRANS TECHNICAL LANDSCAPE MANUAL FOR ROADWAYS AND TRANSPORTATION FACILITIES

TURF ESTABLISHMENT

REVISIONS	
JUNE 23, 2009	WHF
JANUARY 15, 2010	WHF
FEBRUARY 16, 2011	WHF

PROJECT NAME: MARLBORO
PROJECT NUMBER: BRF 010-1 (43)

FILE NAME: s10b414ero_det.dgn
PROJECT LEADER: K. HIGGINS
DESIGNED BY: R. KLINEFELTER
EPSC DETAILS 2

PLOT DATE: 28-AUG-2013
DRAWN BY: K. FRIEDLAND
CHECKED BY: G. LAROCHE
SHEET 39 OF 50

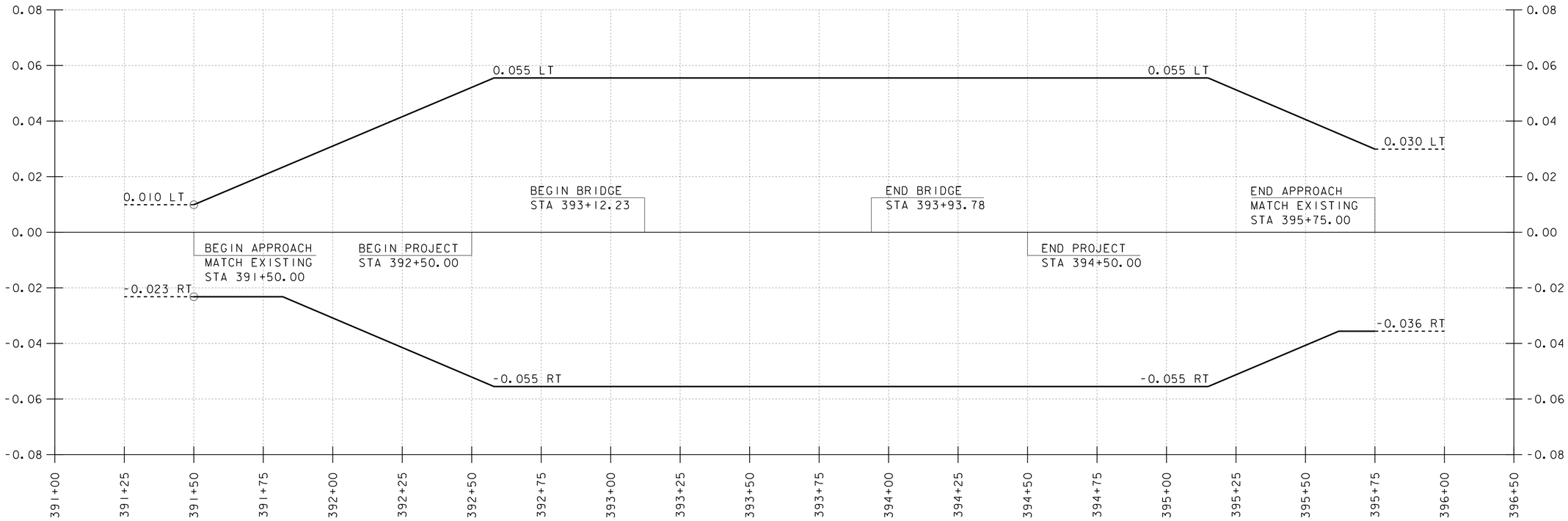

VT 9 BANKING DIAGRAM

HORIZONTAL SCALE: 1" = 20'-0"
VERTICAL SCALE: NOT TO SCALE

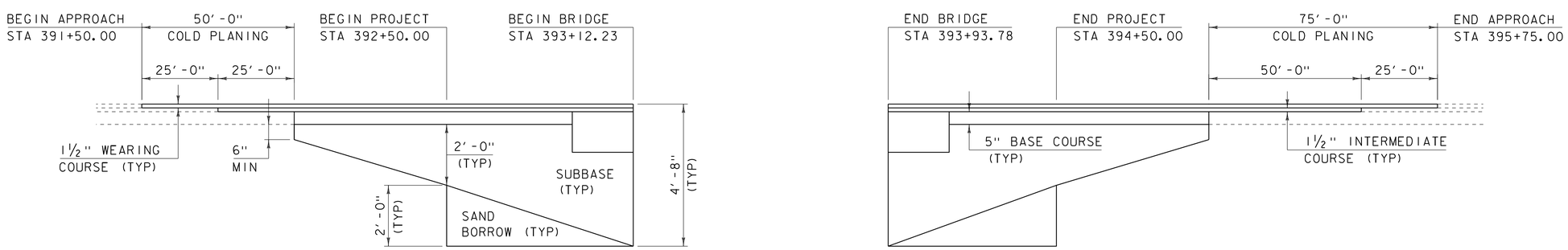

VT 9 MATERIAL TRANSITION DETAIL

HORIZONTAL SCALE: 1" = 20'-0"
VERTICAL SCALE: 1" = 2'-0"

PROJECT NAME: MARLBORO	
PROJECT NUMBER: BRF 010-1(43)	
FILE NAME: s10b414pro.dgn	PLOT DATE: 28-AUG-2013
PROJECT LEADER: K. HIGGINS	DRAWN BY: K. FRIEDLAND
DESIGNED BY: R. KLINEFELTER	CHECKED BY: G. LAROCHE
BANKING DIAGRAM AND MATERIAL TRANSITION	SHEET 40 OF 50

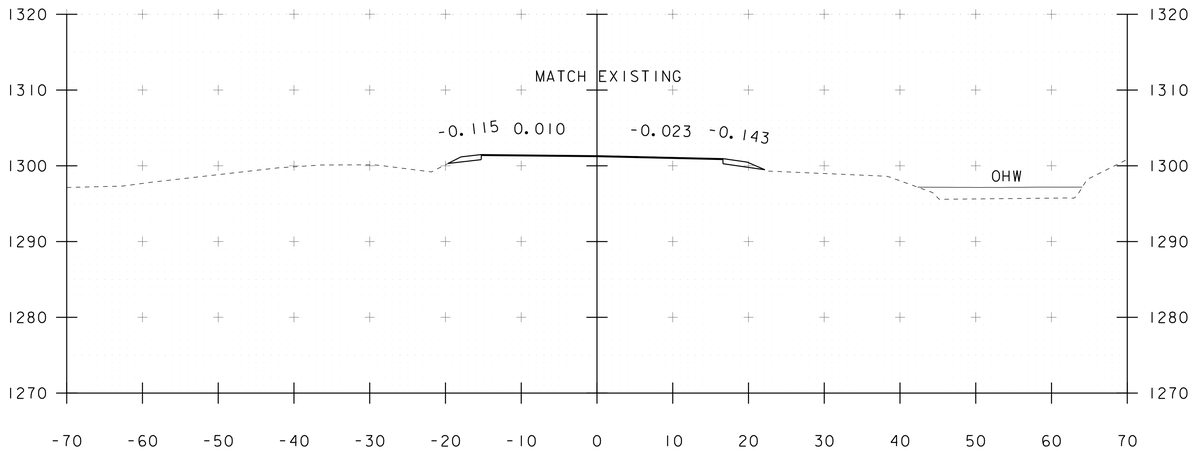

391+50
BEGIN APPROACH

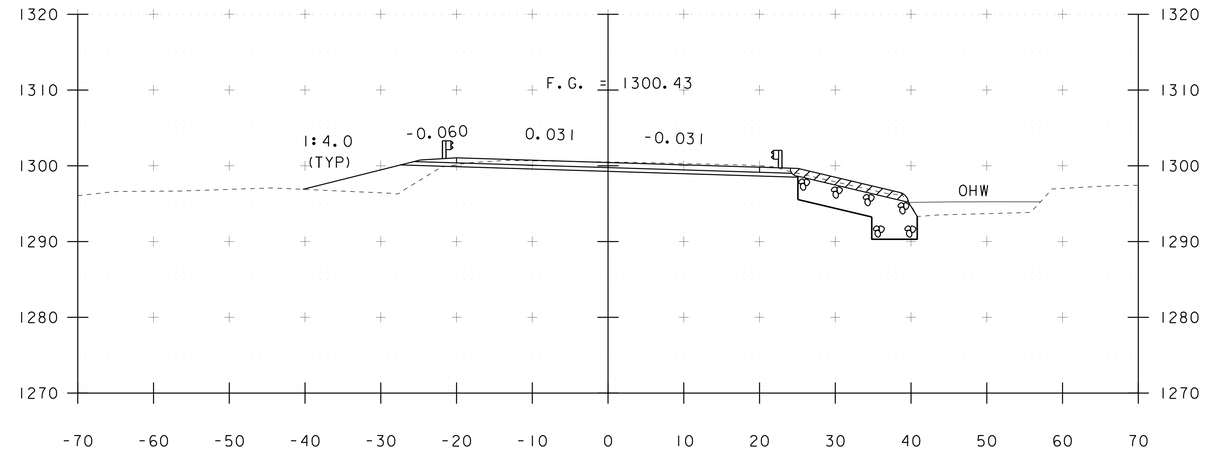

392+00

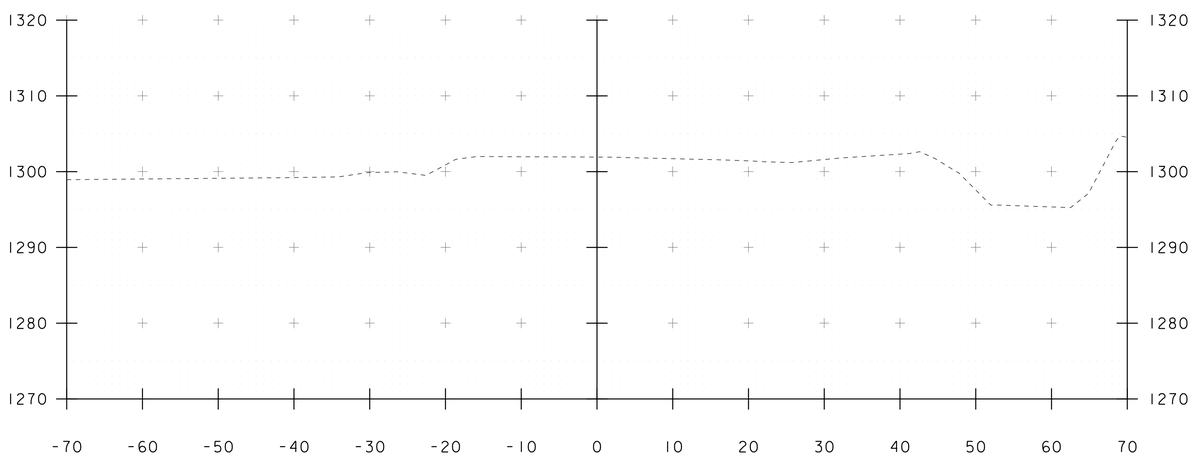

391+25

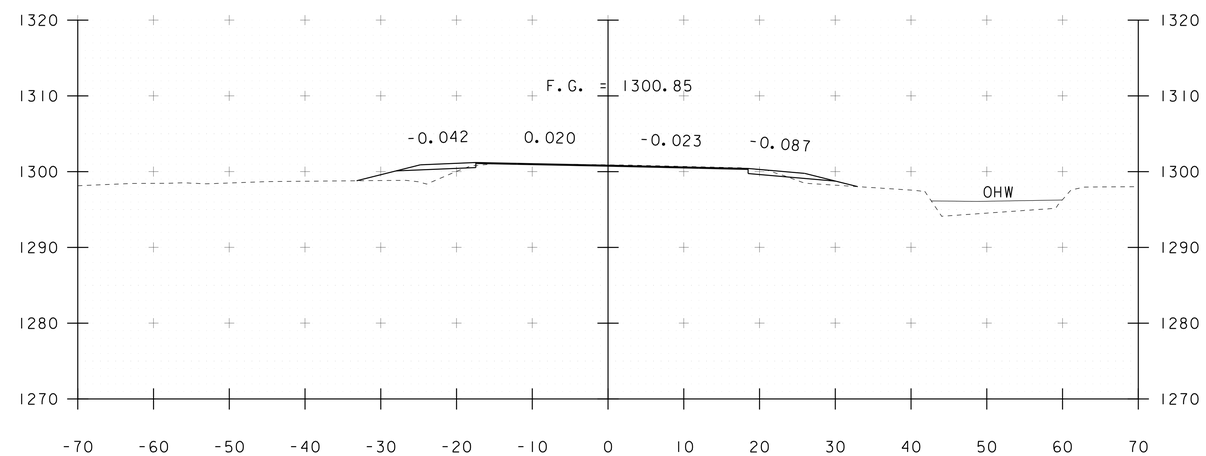

391+75

STA. 391+25 TO STA. 392+00

PROJECT NAME: MARLBORO	
PROJECT NUMBER: BRF 010-1(43)	
FILE NAME: s10b414xsl.dgn	PLOT DATE: 28-AUG-2013
PROJECT LEADER: K. HIGGINS	DRAWN BY: K. FRIEDLAND
DESIGNED BY: R. KLINEFELTER	CHECKED BY: G. LAROCHE
MAINLINE SECTIONS 1	SHEET 41 OF 50

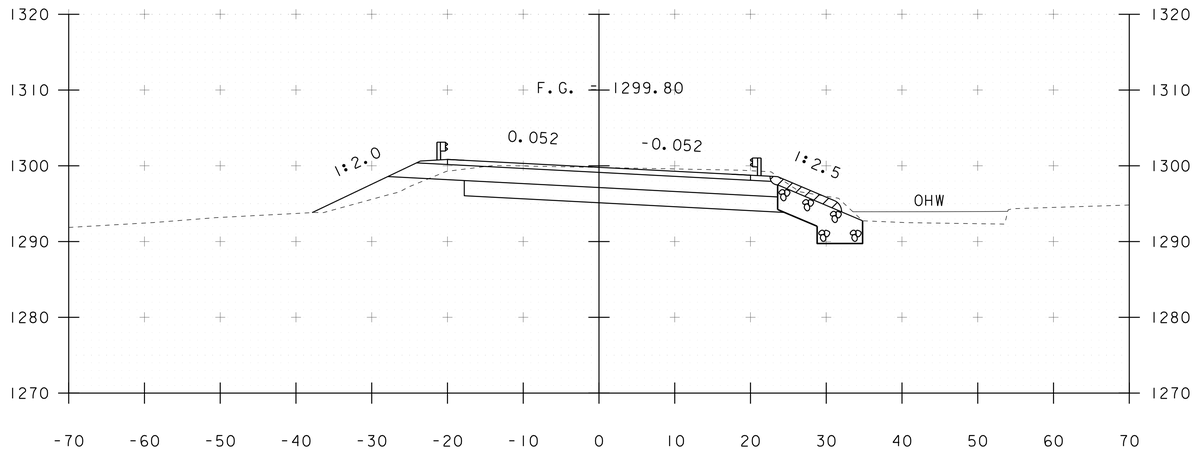

392+50
BEGIN PROJECT

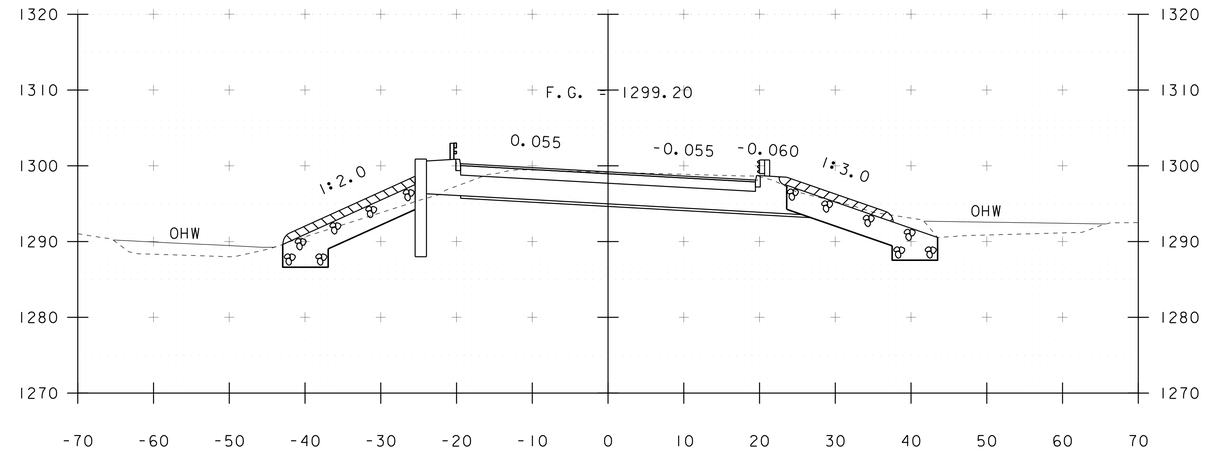

393+00

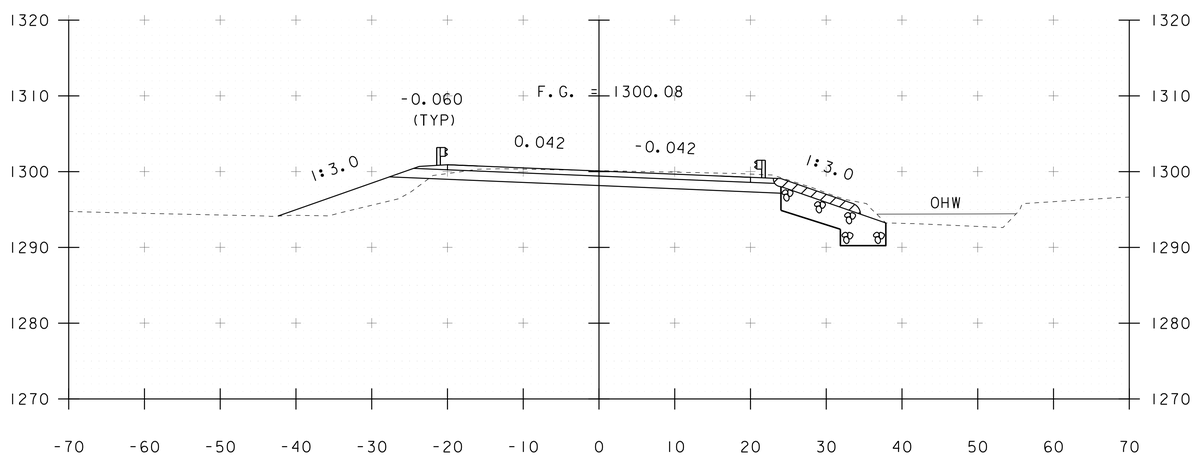

392+25

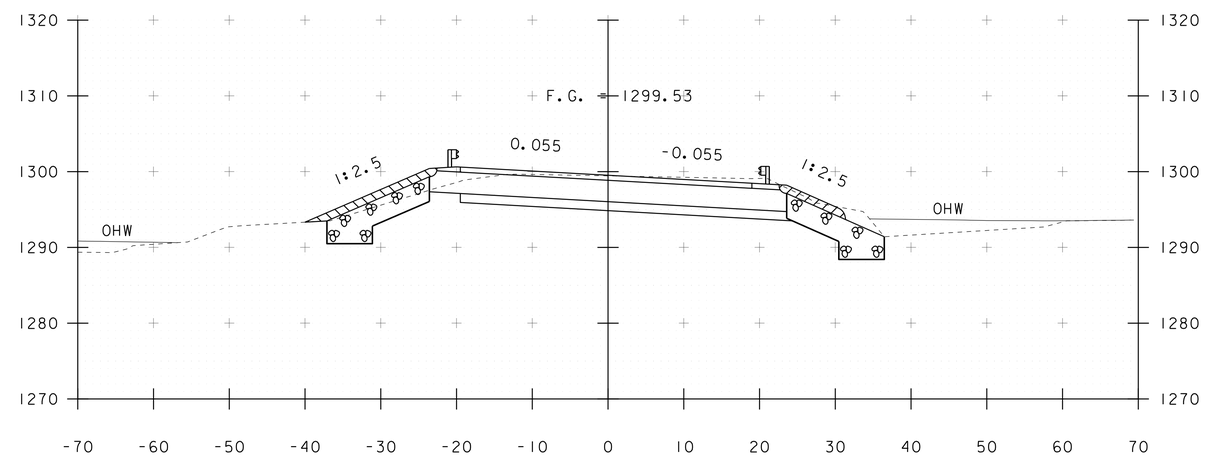

392+75

STA. 392+25 TO STA. 393+00

PROJECT NAME: MARLBORO	
PROJECT NUMBER: BRF 010-1(43)	
FILE NAME: sl0b414xsl.dgn	PLOT DATE: 28-AUG-2013
PROJECT LEADER: K. HIGGINS	DRAWN BY: K. FRIEDLAND
DESIGNED BY: R. KLINEFELTER	CHECKED BY: G. LAROCHE
MAINLINE SECTIONS 2	SHEET 42 OF 50

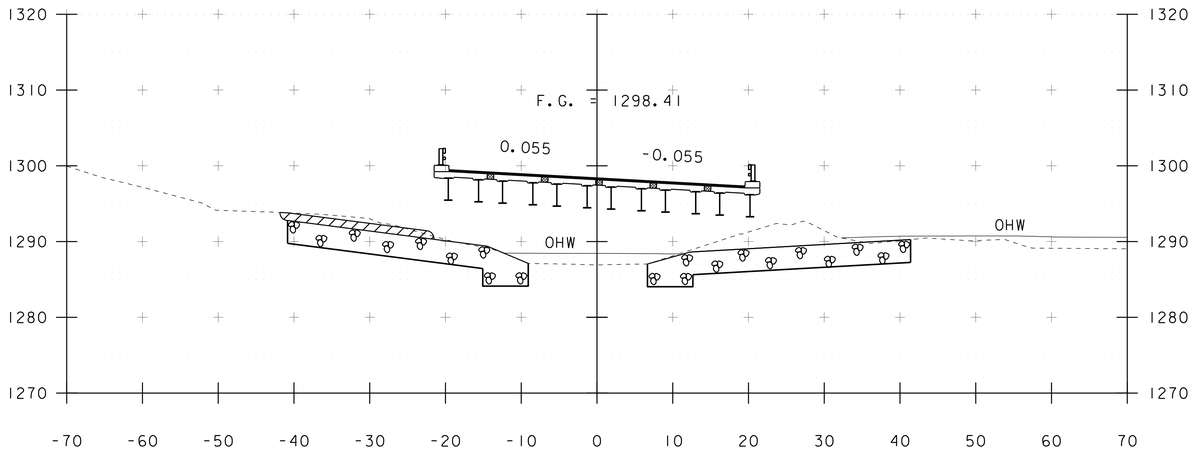

393+50

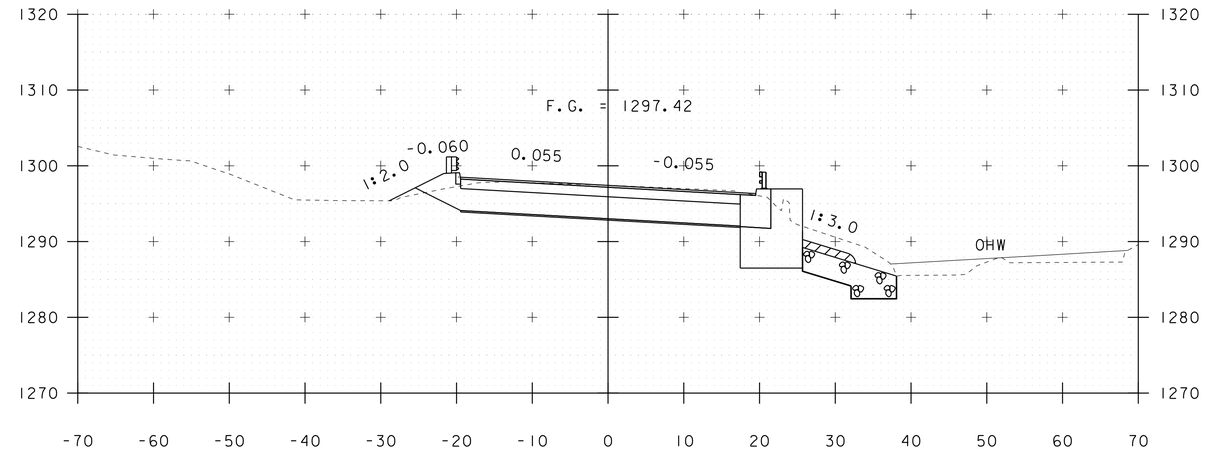

394+00

END BRIDGE STA 393+93.78

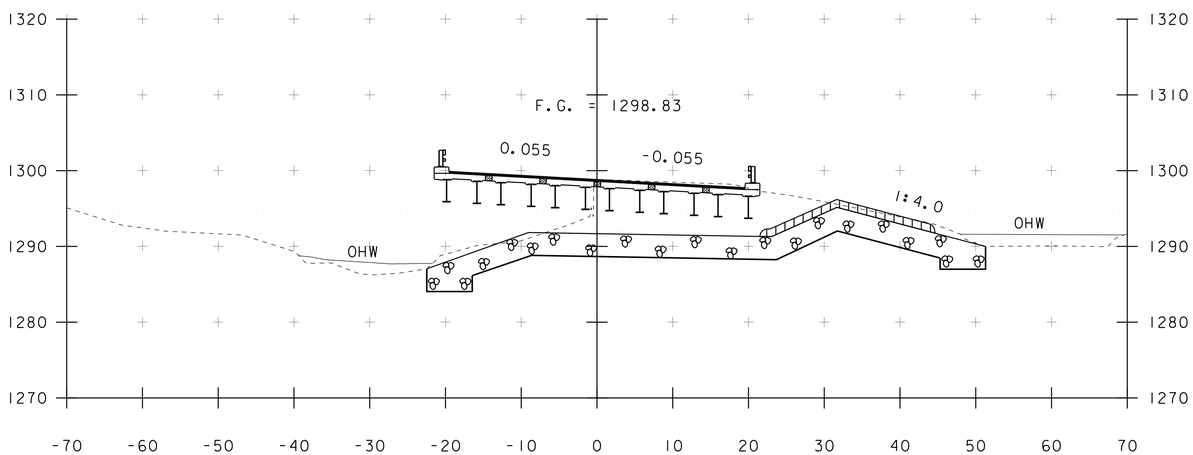

393+25

BEGIN BRIDGE STA 393+12.23

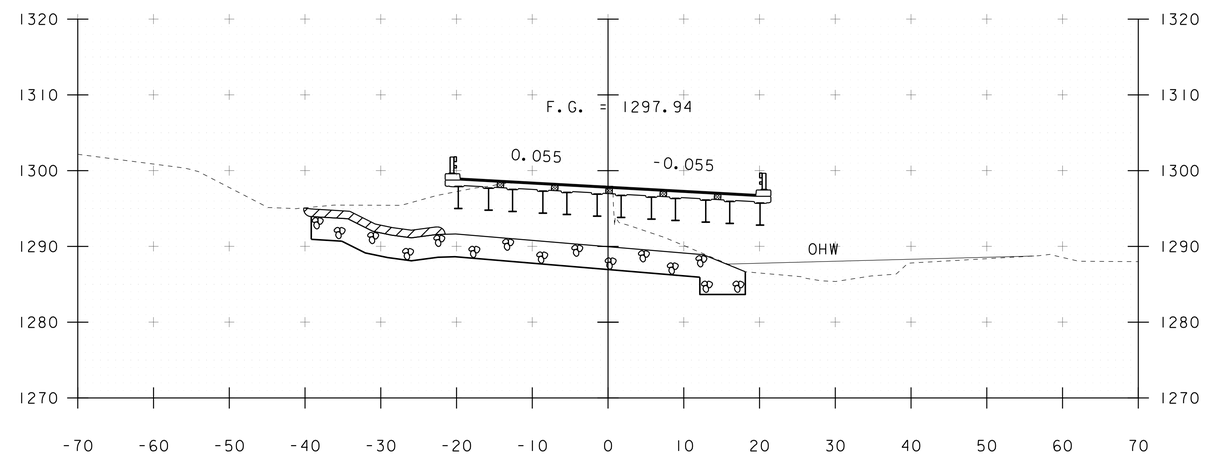

393+75

STA. 393+25 TO STA. 394+00

PROJECT NAME: MARLBORO	
PROJECT NUMBER: BRF 010-1(43)	
FILE NAME: s10b414xsl.dgn	PLOT DATE: 28-AUG-2013
PROJECT LEADER: K. HIGGINS	DRAWN BY: K. FRIEDLAND
DESIGNED BY: R. KLINEFELTER	CHECKED BY: G. LAROCHE
MAINLINE SECTIONS 3	SHEET 43 OF 50

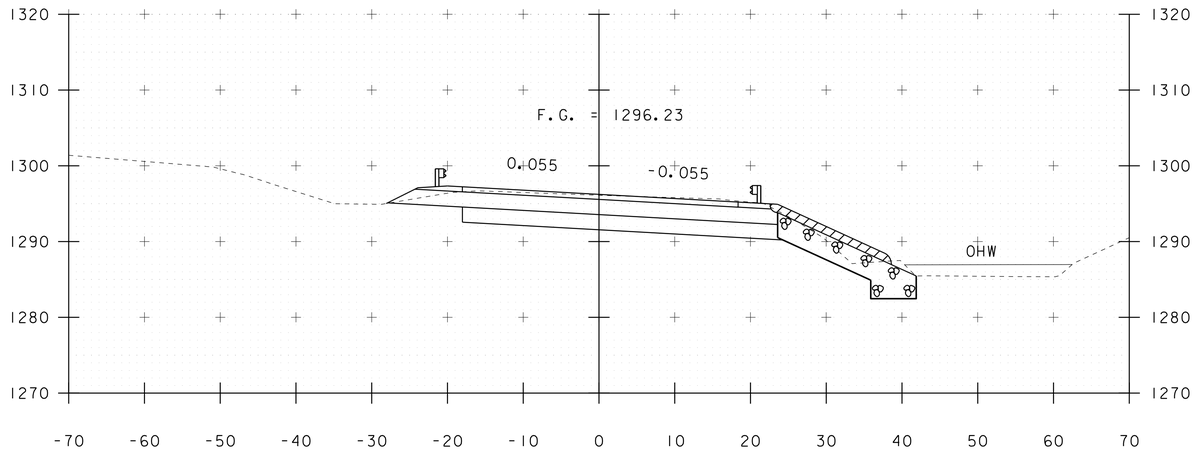

394+50
END PROJECT

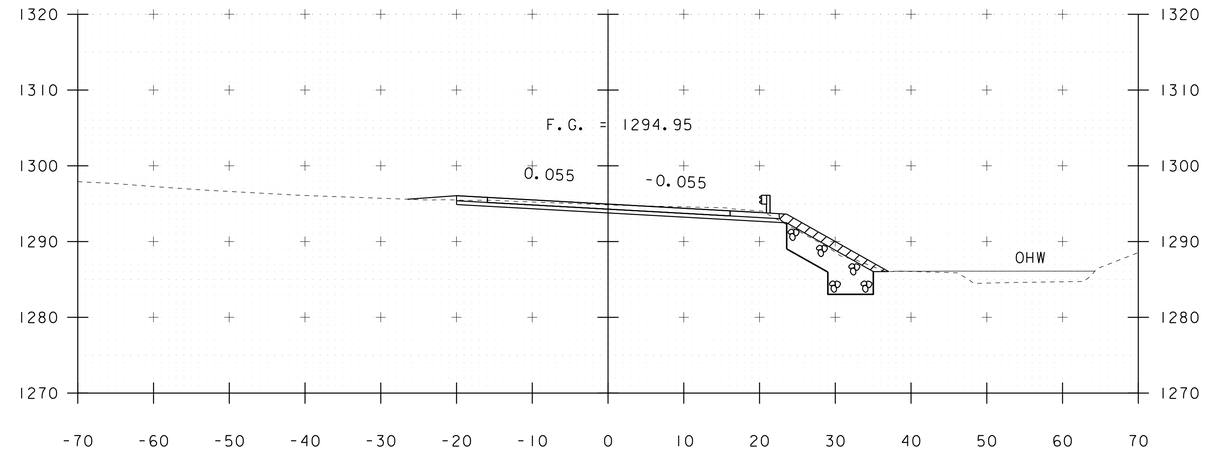

395+00

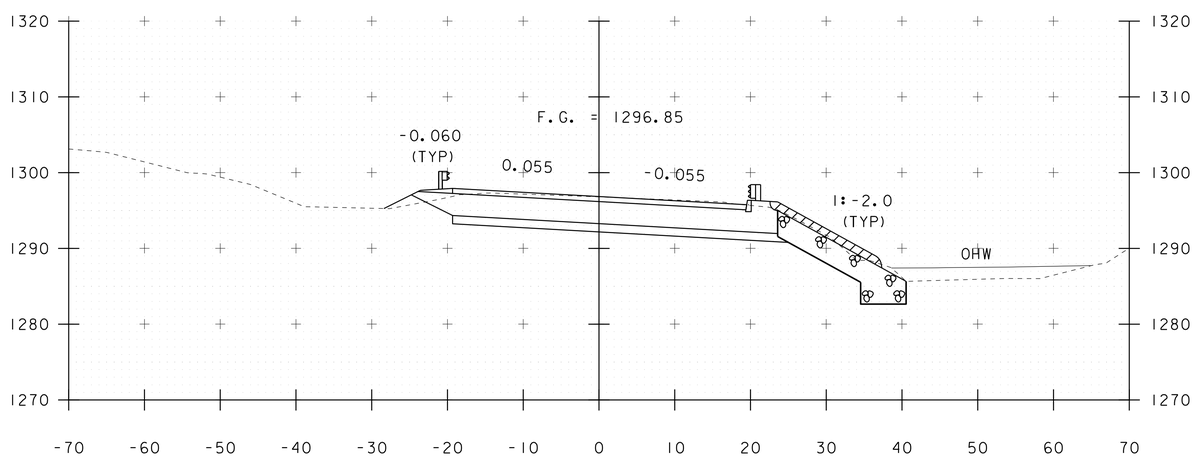

394+25

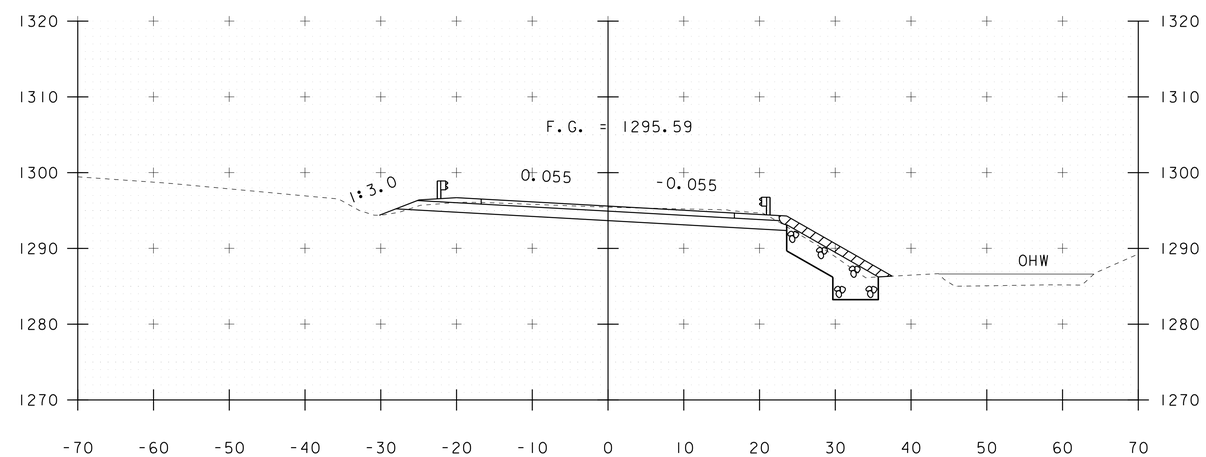

394+75

STA. 394+25 TO STA. 395+00

PROJECT NAME: MARLBORO	
PROJECT NUMBER: BRF 010-1(43)	
FILE NAME: s10b414xsl.dgn	PLOT DATE: 28-AUG-2013
PROJECT LEADER: K. HIGGINS	DRAWN BY: K. FRIEDLAND
DESIGNED BY: R. KLINEFELTER	CHECKED BY: G. LAROCHE
MAINLINE SECTIONS 4	SHEET 44 OF 50

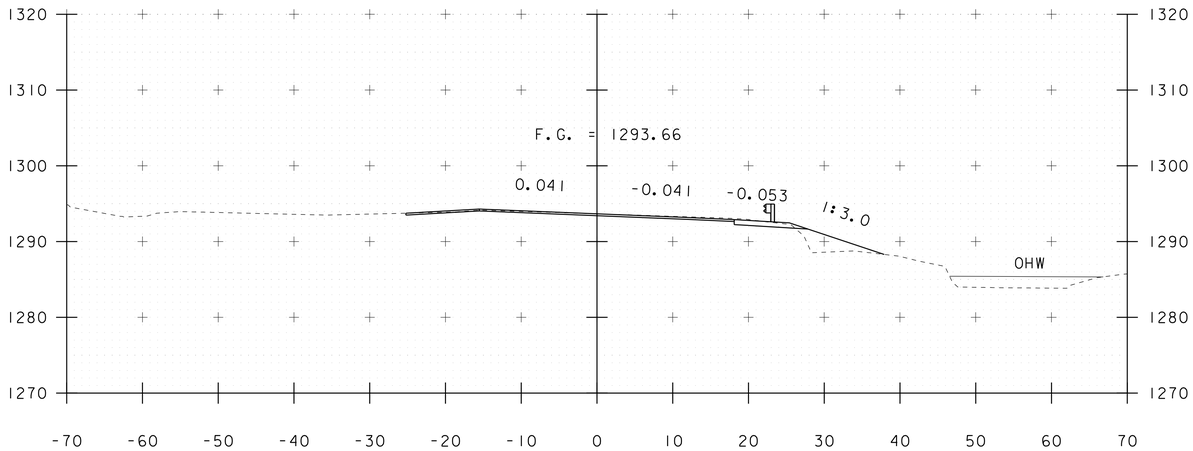

395+50

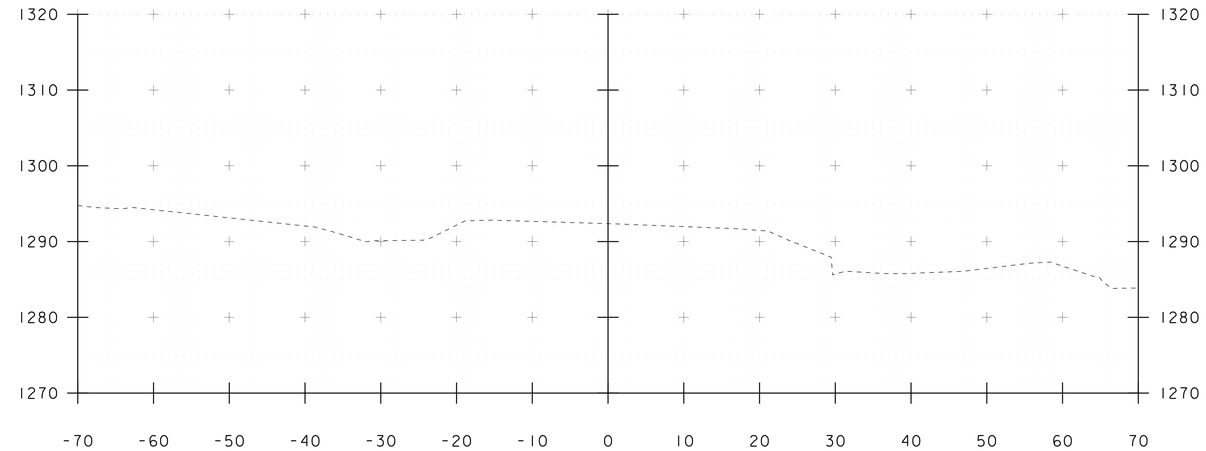

396+00

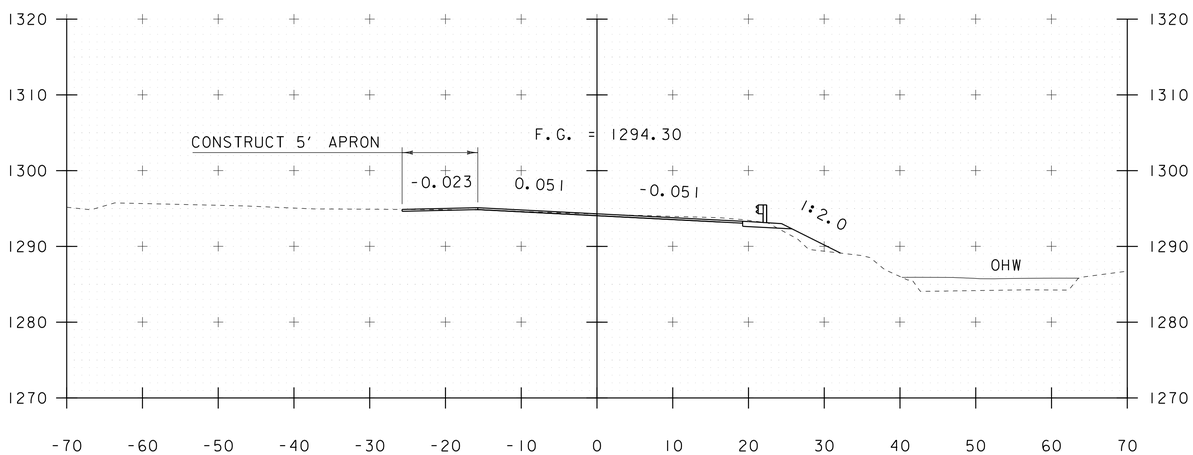

395+25

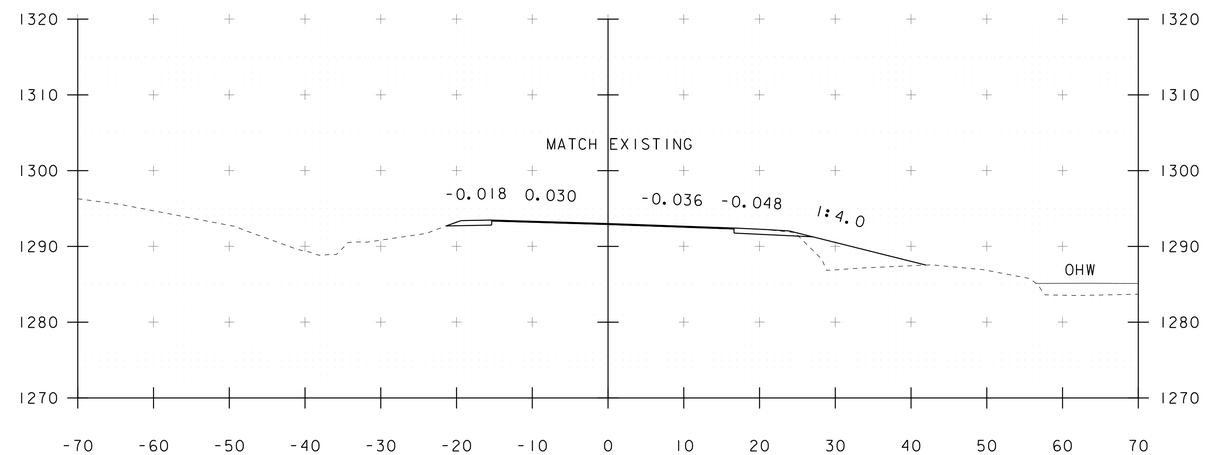

395+75
END APPROACH

STA. 395+25 TO STA. 396+00

PROJECT NAME: MARLBORO	
PROJECT NUMBER: BRF 010-1(43)	
FILE NAME: s10b414xsl.dgn	PLOT DATE: 28-AUG-2013
PROJECT LEADER: K. HIGGINS	DRAWN BY: K. FRIEDLAND
DESIGNED BY: R. KLINEFELTER	CHECKED BY: G. LAROCHE
MAINLINE SECTIONS 5	SHEET 45 OF 50

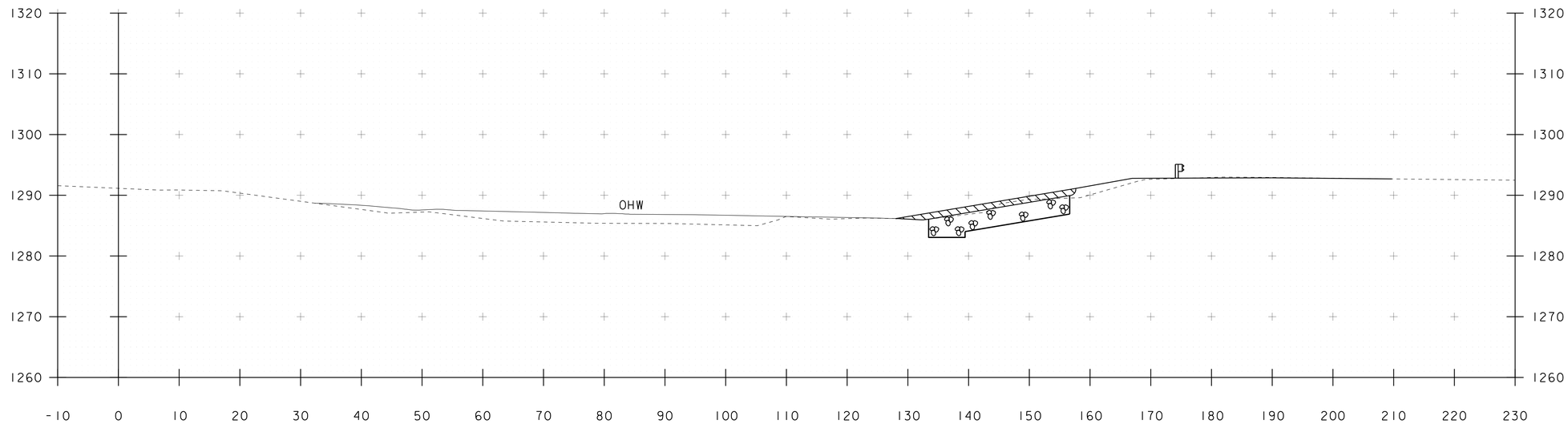

49+20

STA 49+17 RT
BEGIN UNCLASSIFIED CHANNEL EXCAVATION
GEOTEXTILE UNDER STONE FILL
STONE FILL, TYPE III
GRUBBING MATERIAL

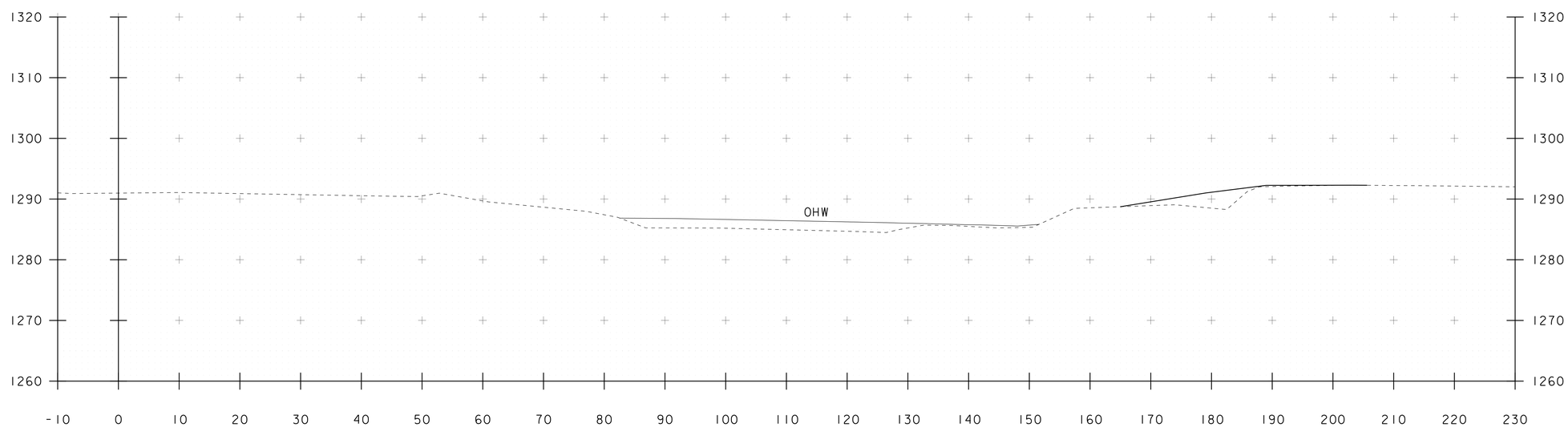

49+10

STA. 49+10 TO STA. 49+20

PROJECT NAME: MARLBORO	
PROJECT NUMBER: BRF 010-1(43)	
FILE NAME: s10b414xsl.dgn	PLOT DATE: 28-AUG-2013
PROJECT LEADER: K. HIGGINS	DRAWN BY: K. FRIEDLAND
DESIGNED BY: R. KLINEFELTER	CHECKED BY: G. LAROCHE
CHANNEL SECTIONS 1	SHEET 46 OF 50

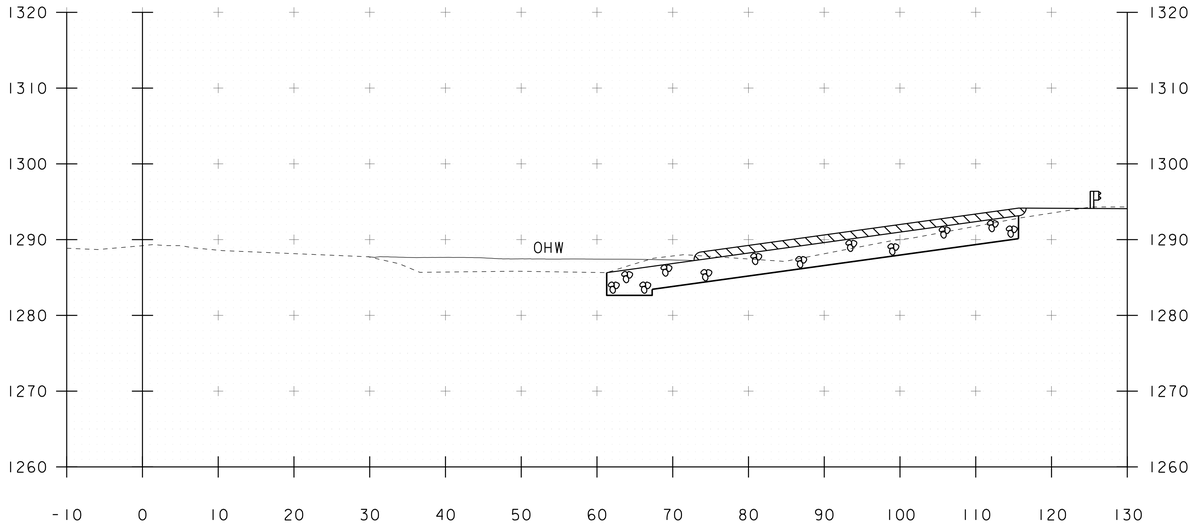

49+40

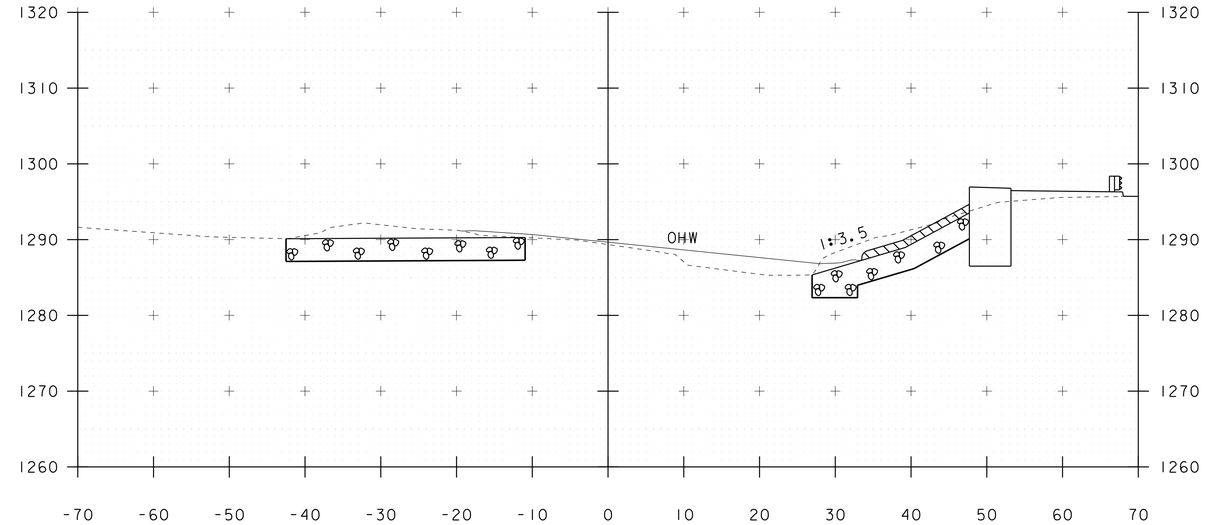

STA 49+56 LT
BEGIN UNCLASSIFIED CHANNEL EXCAVATION
GEOTEXTILE UNDER STONE FILL
STONE FILL, TYPE III
GRUBBING MATERIAL

49+60

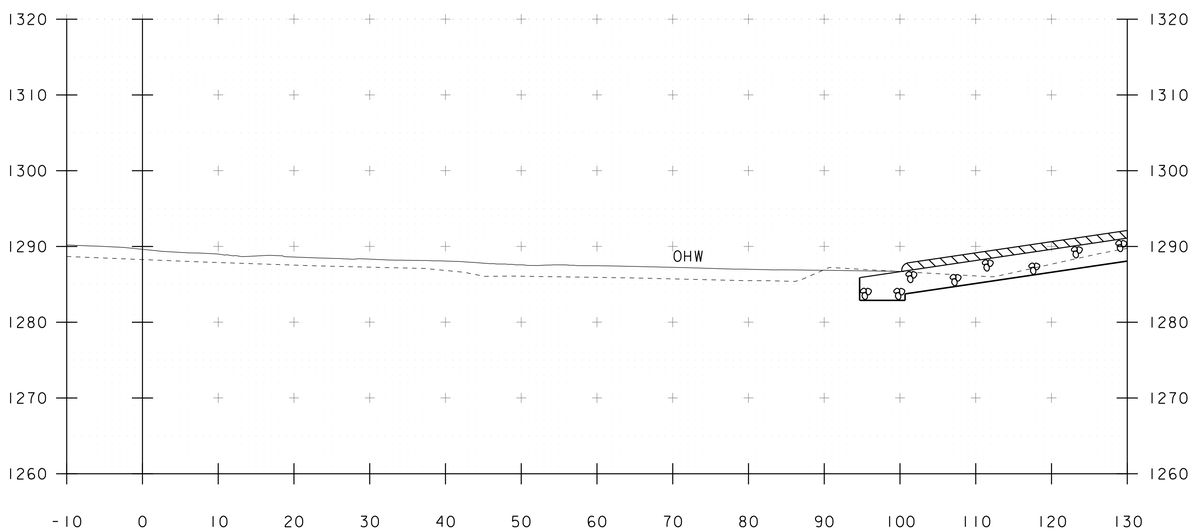

49+30

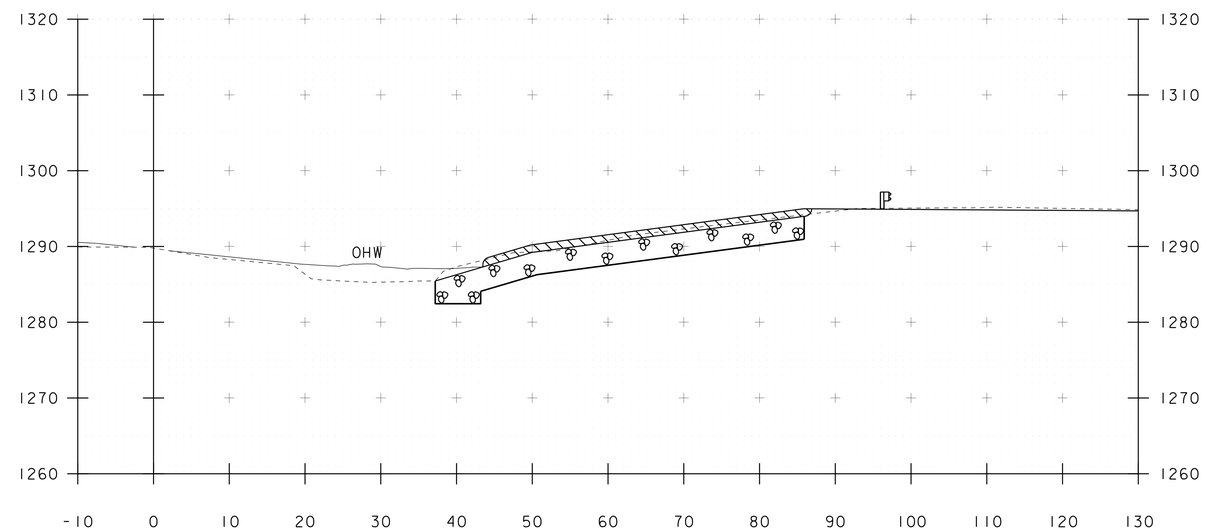

49+50

STA. 49+30 TO STA. 49+60

PROJECT NAME: MARLBORO	
PROJECT NUMBER: BRF 010-1(43)	
FILE NAME: s10b414xsl.dgn	PLOT DATE: 28-AUG-2013
PROJECT LEADER: K. HIGGINS	DRAWN BY: K. FRIEDLAND
DESIGNED BY: R. KLINEFELTER	CHECKED BY: G. LAROCHE
CHANNEL SECTIONS 2	SHEET 47 OF 50

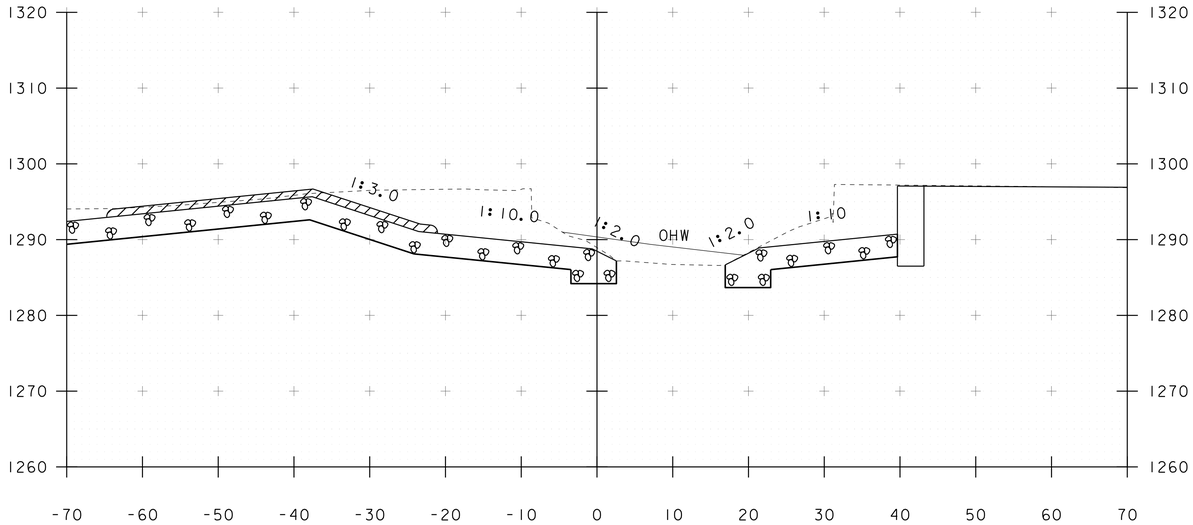

49+80

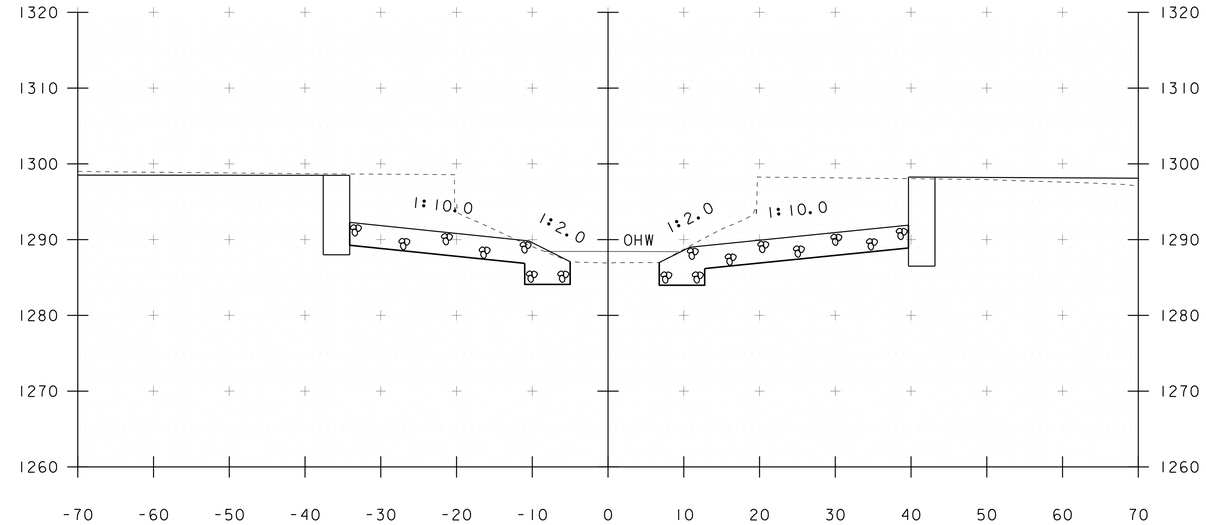

50+00

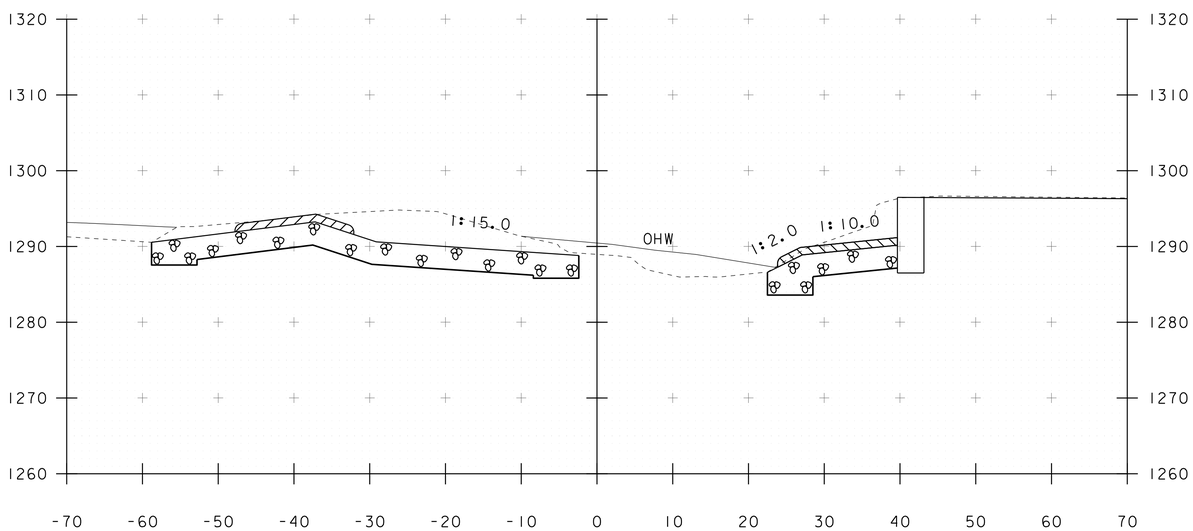

49+70

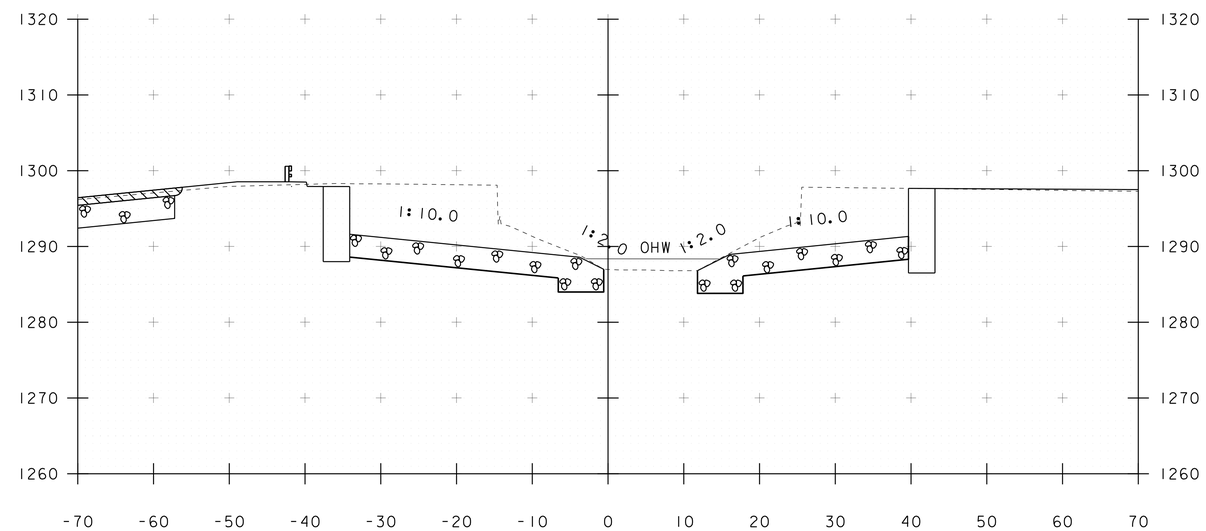

49+90

STA. 49+70 TO STA. 50+00

PROJECT NAME: MARLBORO	
PROJECT NUMBER: BRF 010-1(43)	
FILE NAME: s10b414xsl.dgn	PLOT DATE: 28-AUG-2013
PROJECT LEADER: K. HIGGINS	DRAWN BY: K. FRIEDLAND
DESIGNED BY: R. KLINEFELTER	CHECKED BY: G. LAROCHE
CHANNEL SECTIONS 3	SHEET 48 OF 50

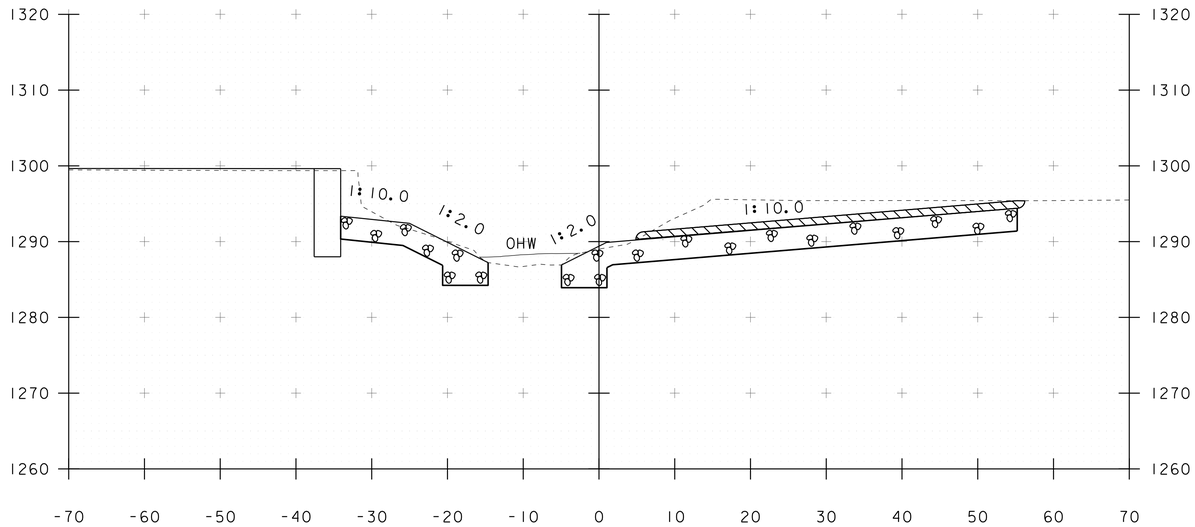

50+20

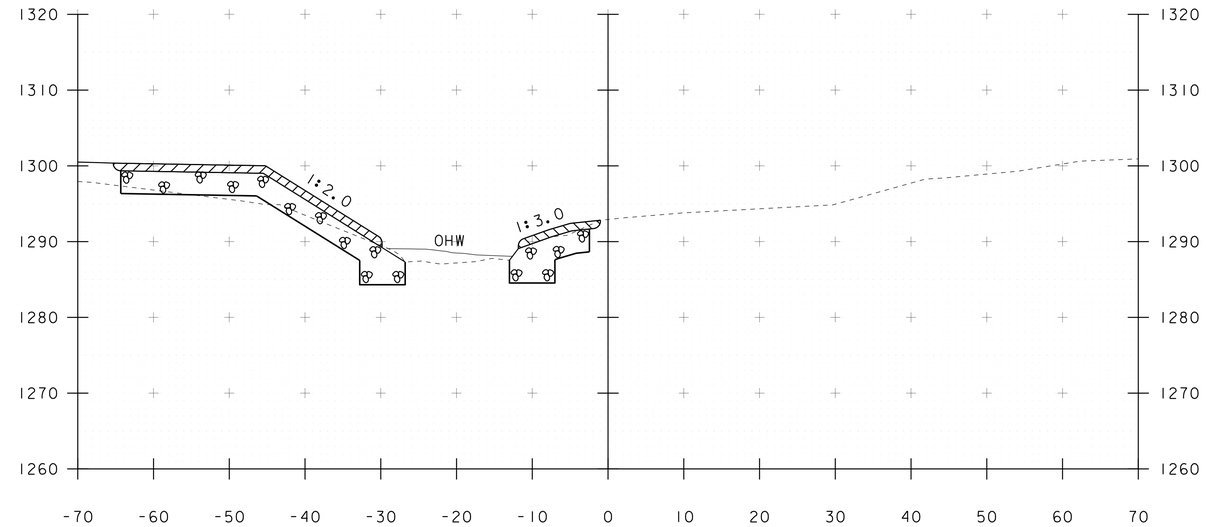

50+40

STA 50+41 LT
END UNCLASSIFIED CHANNEL EXCAVATION
GEOTEXTILE UNDER STONE FILL
STONE FILL, TYPE III
GRUBBING MATERIAL

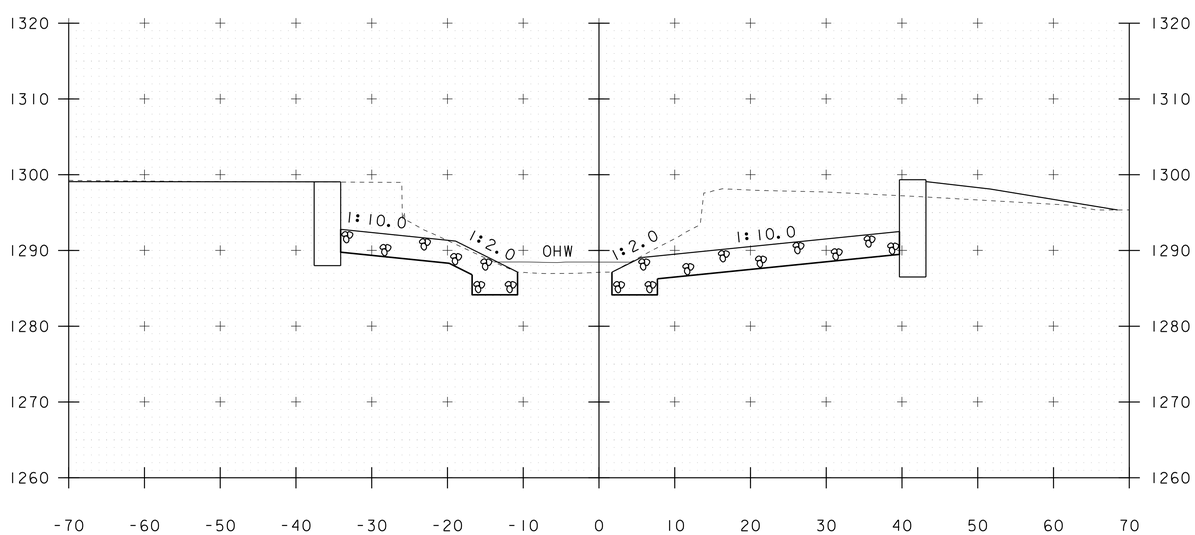

50+10

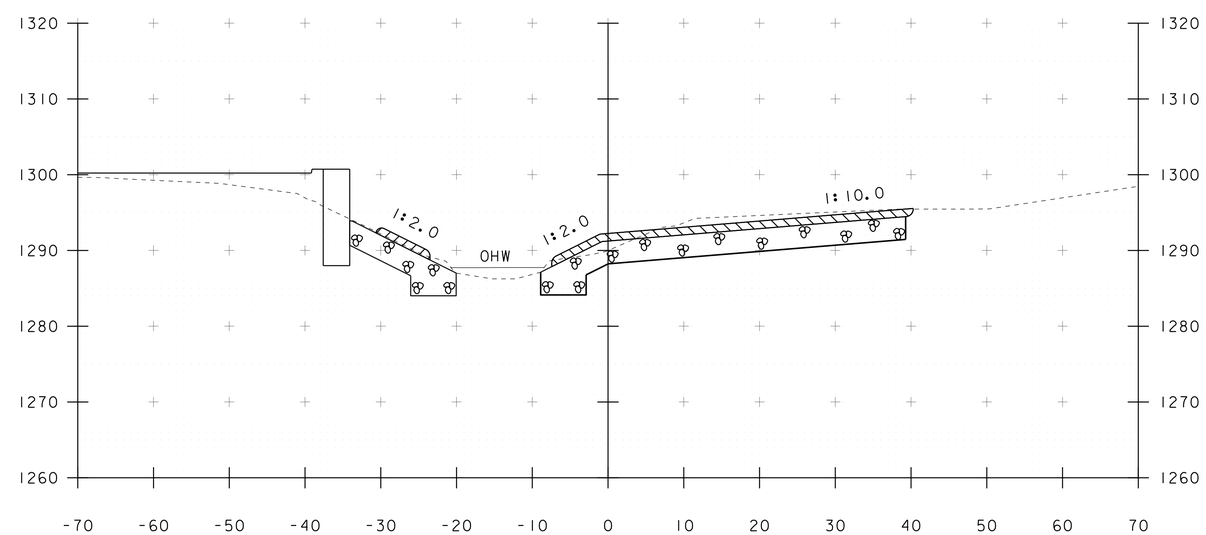

50+30

STA. 50+10 TO STA. 50+40

PROJECT NAME: MARLBORO	
PROJECT NUMBER: BRF 010-1(43)	
FILE NAME: s10b414xsl.dgn	PLOT DATE: 28-AUG-2013
PROJECT LEADER: K. HIGGINS	DRAWN BY: K. FRIEDLAND
DESIGNED BY: R. KLINEFELTER	CHECKED BY: G. LAROCHE
CHANNEL SECTIONS 4	SHEET 49 OF 50

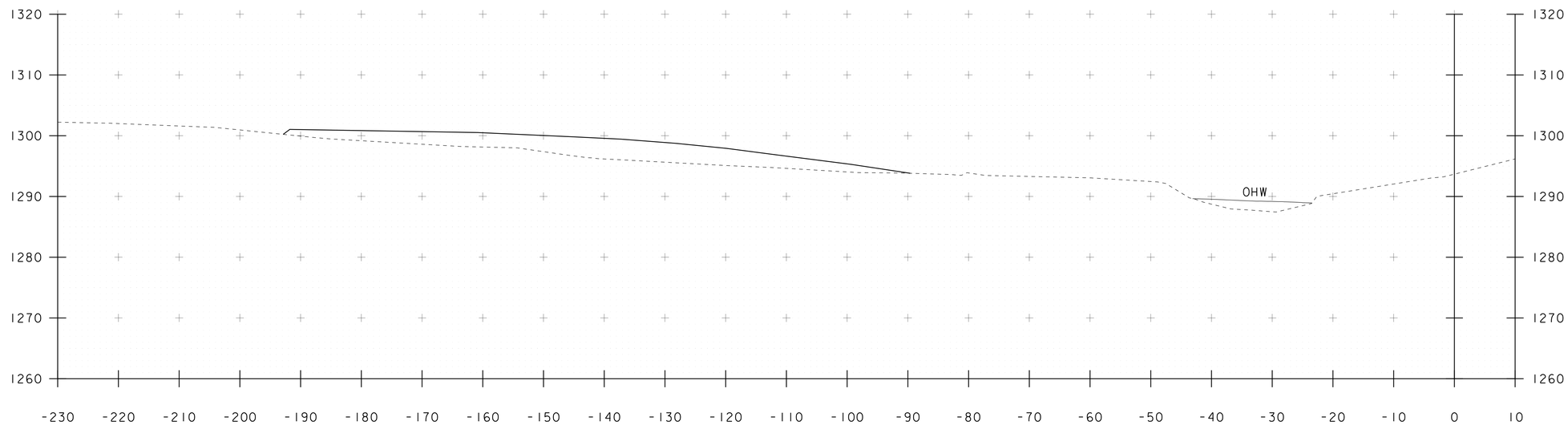

STA 50+57 FAR LT
END UNCLASSIFIED CHANNEL EXCAVATION
GEOTEXTILE UNDER STONE FILL
STONE FILL, TYPE III
GRUBBING MATERIAL

50+60

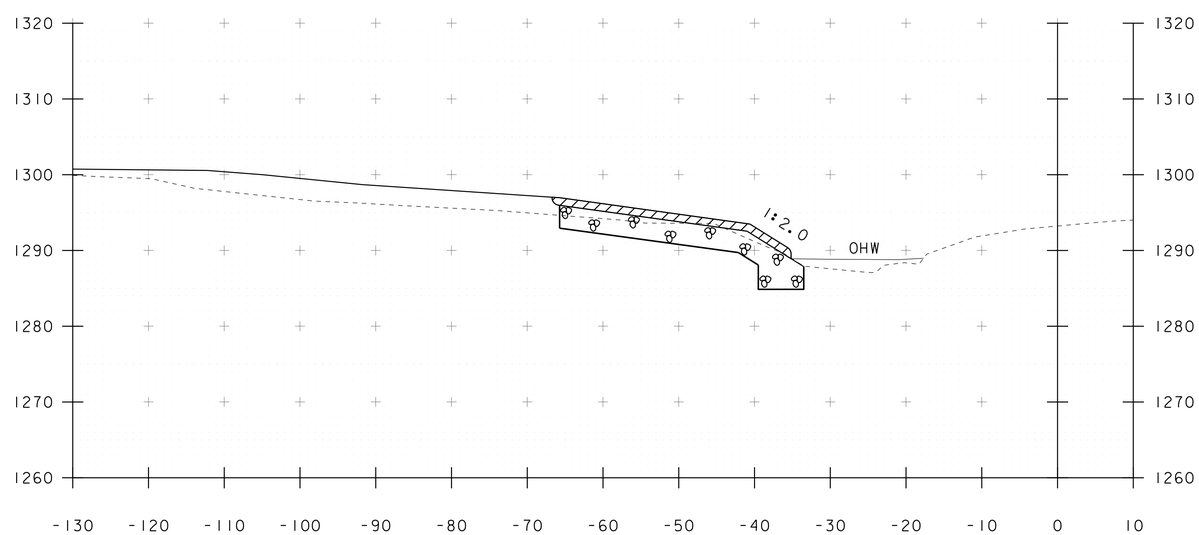

50+50

STA. 50+50 TO STA. 50+60

PROJECT NAME: MARLBORO	
PROJECT NUMBER: BRF 010-1(43)	
FILE NAME: s10b414xsl.dgn	PLOT DATE: 28-AUG-2013
PROJECT LEADER: K. HIGGINS	DRAWN BY: K. FRIEDLAND
DESIGNED BY: R. KLINEFELTER	CHECKED BY: G. LAROCHE
CHANNEL SECTIONS 5	SHEET 50 OF 50

CONCRETE GENERAL NOTES

1. ALL EXPOSED EDGES OF CONCRETE SHALL BE CHAMFERED 1" x 1"

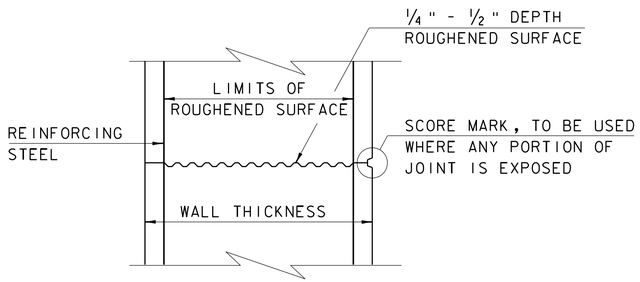

TYPICAL HORIZONTAL CONSTRUCTION JOINT
(NOT TO SCALE)

1. THE SURFACE OF THE CONCRETE CONSTRUCTION JOINTS SHALL BE CLEANED AND FREE OF LAITANCE.

2. IMMEDIATELY BEFORE NEW CONCRETE IS PLACED, ALL CONSTRUCTION JOINTS SHALL BE WETTED AND STANDING WATER REMOVED.

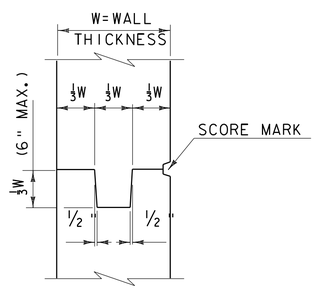

TYPICAL CONCRETE CONSTRUCTION JOINT
(NOT TO SCALE)

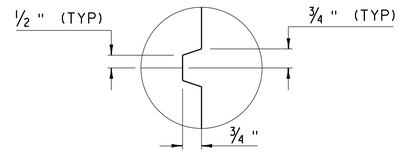

SCORE MARK DETAIL
(NOT TO SCALE)

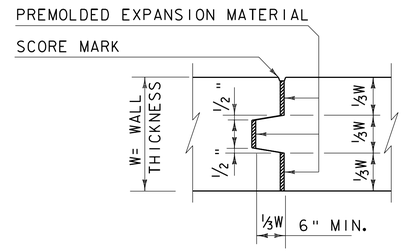

TYPICAL CONCRETE EXPANSION JOINT
(NOT TO SCALE)

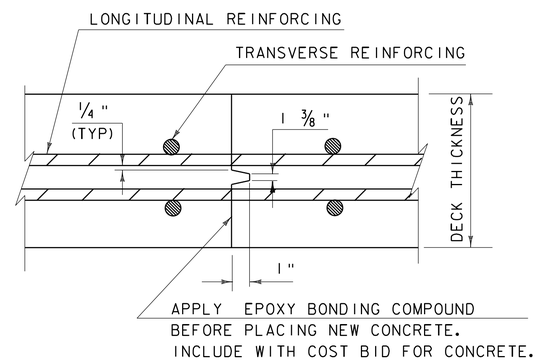

TRANSVERSE BRIDGE SLAB CONSTRUCTION JOINT DETAILS
(NOT TO SCALE)

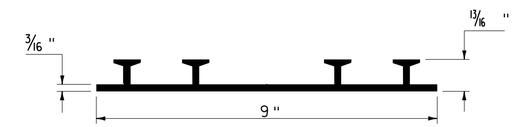

P.V.C. WATERSTOP FOR CONSTRUCTION JOINTS
(NOT TO SCALE)

PAYMENT FOR THE P.V.C. WATERSTOP SHALL BE INCIDENTAL TO THE UNIT BID PRICE FOR THE ADJACENT CONCRETE.

OTHER CONFIGURATIONS OF WATERSTOP MAY BE USED UPON APPROVAL OF THE ENGINEER.

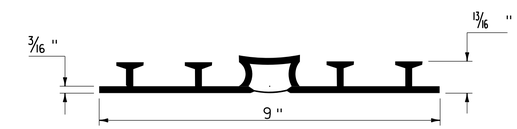

P.V.C. WATERSTOP FOR EXPANSION JOINTS
(NOT TO SCALE)

PAYMENT FOR THE P.V.C. WATERSTOP SHALL BE INCIDENTAL TO THE UNIT BID PRICE FOR THE ADJACENT CONCRETE.

OTHER CONFIGURATIONS OF WATERSTOP MAY BE USED UPON APPROVAL OF THE ENGINEER.

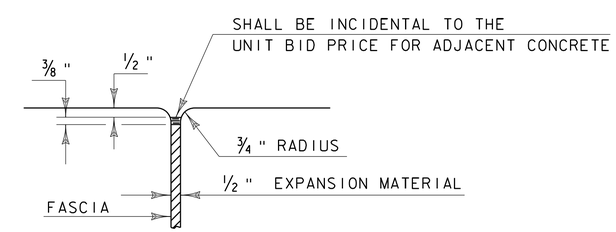

JOINT BETWEEN FASCIA AND WINGWALL
(NOT TO SCALE)

REVISIONS	
MAY 7, 2010	APPROVED FOR USE BY VAOT STRUCTURES SECTION

CONCRETE DETAILS AND NOTES

VERMONT AGENCY OF TRANSPORTATION
STRUCTURES - SECTION

STRUCTURES DETAIL
SD-501.00

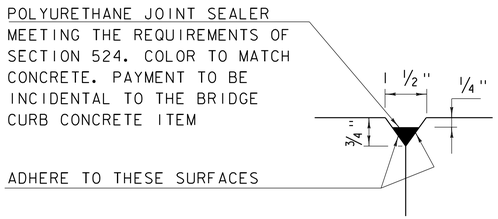

DETAIL "B"
(NOT TO SCALE)

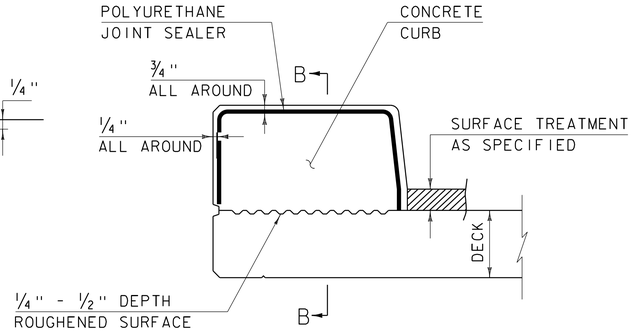

CONCRETE CURB JOINT SECTION
(NOT TO SCALE)

1. SEE TYPICAL HORIZONTAL CONSTRUCTION JOINT DETAIL FOR ADDITIONAL INFORMATION

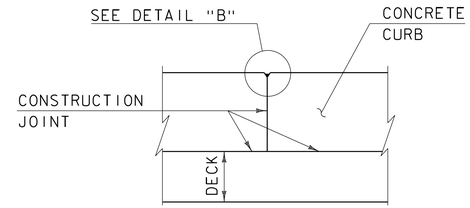

SECTION B - B
(NOT TO SCALE)

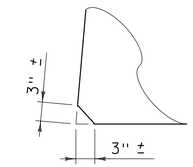

ACUTE ANGLE CLIP DETAIL
(NOT TO SCALE)

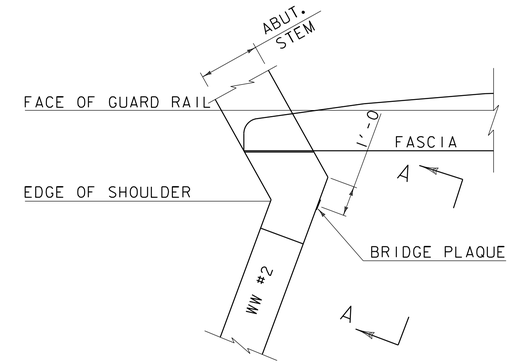

PLAN

CONCRETE CURB JOINT NOTES

1. CONCRETE CURBS MAY BE PLACED IN ONE CONTINUOUS OPERATION IF AN APPROVED SHRINKAGE REDUCING ADMIXTURE LISTED IN THE SPECIAL PROVISIONS IS USED WITH THE CONCRETE MIX DESIGN. PAYMENT FOR THE SHRINKAGE REDUCING ADMIXTURE WILL BE INCIDENTAL TO THE BRIDGE CURB CONCRETE ITEM.

2. IF THE CONTRACTOR CHOOSES NOT TO USE AN APPROVED SHRINKAGE REDUCING ADMIXTURE, THE CURBS SHALL BE CONSTRUCTED WITH CONSTRUCTION JOINTS SPACED AT A MAXIMUM OF 15'-0" CENTER TO CENTER AND 2'-0" MINIMUM FROM THE CENTER OF NEAREST BRIDGE RAILING POST.

3. ON MULTI-SPAN CONTINUOUS SUPERSTRUCTURES, REGARDLESS OF WHETHER APPROVED SHRINKAGE REDUCING ADMIXTURE IS USED, CURB JOINTS SHALL BE LOCATED OVER THE CENTERLINE OF PIERS AND 7'-0" EACH SIDE OF THE CENTERLINE OF EACH PIER.

4. WHEN CURB JOINTS ARE USED THE CURBS SHALL BE PLACED IN ALTERNATE SECTIONS WITH A MINIMUM OF 48 HOUR DELAY BETWEEN ADJACENT PLACEMENTS.

5. LONGITUDINAL REINFORCING SHALL BE CONTINUOUS THROUGH CURB CONSTRUCTION JOINTS. CURB STIRRUP BARS SHALL BE TURNED AS NECESSARY TO MAINTAIN COVER IN THE FLARED CURB ENDS.

6. THE JOINT SPACING AND DETAILS SHOWN SHALL APPLY TO SIDEWALKS WHEN SHOWN IN THE PLANS.

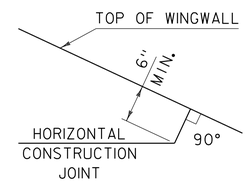

HORIZONTAL WINGWALL CONSTRUCTION JOINT
(NOT TO SCALE)

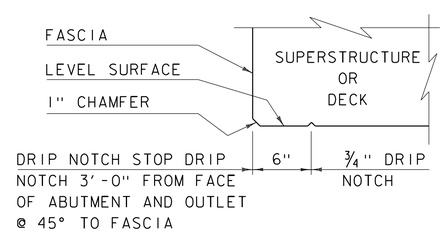

DRIP NOTCH DETAIL
(NOT TO SCALE)

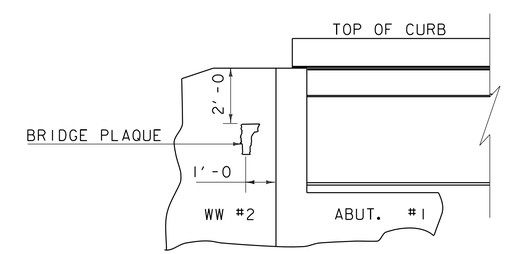

VIEW "A - A"

BRIDGE PLAQUE
(NOT TO SCALE)

THE BRIDGE PLAQUE WILL BE SUPPLIED BY THE AGENCY OF TRANSPORTATION AND SHALL BE INSTALLED BY THE CONTRACTOR AT ABUTMENT #1 ON THE RIGHT SIDE AS SHOWN OR AS DIRECTED BY THE ENGINEER.

PAYMENT FOR INSTALLATION OF THE BRIDGE PLAQUE SHALL BE INCIDENTAL TO THE ADJACENT CONCRETE.

REVISIONS

MAY 7, 2010	APPROVED FOR USE BY VAOT STRUCTURES SECTION
JUNE 4, 2010	MODIFIED AND ADDED TWO DETAILS
OCTOBER 10, 2012	MODIFIED HORZ. JOINT WINGWALL ADD 6" MIN. DIMENSION

CONCRETE DETAILS AND NOTES

VERMONT AGENCY OF TRANSPORTATION
STRUCTURES - SECTION

STRUCTURES DETAIL
SD-502.00

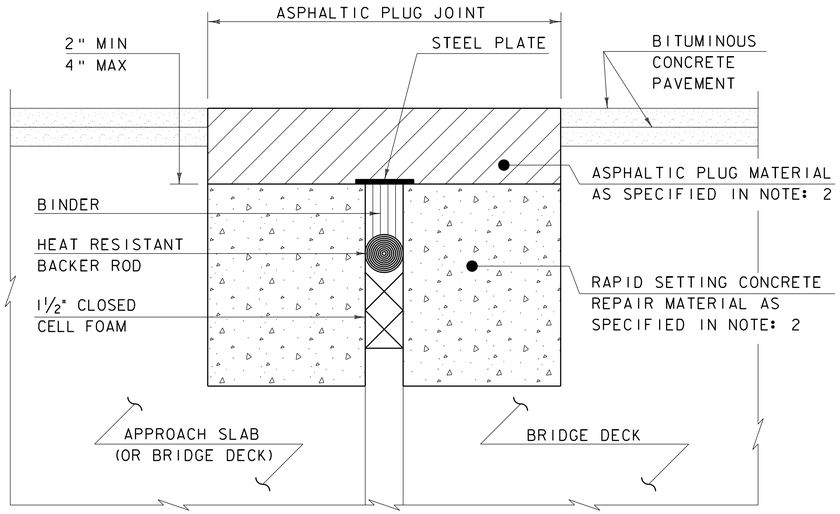

ASPHALTIC PLUG-TYPE JOINT DETAIL - REHAB

NOTES: (NOT TO SCALE)

1. THE CONTRACTOR SHALL REMOVE ALL ASPHALTIC PLUG JOINT MATERIAL AND DETERIORATED CONCRETE AS DIRECTED BY THE ENGINEER. REMOVAL OF THE FIRST 4 INCHES OF MATERIAL SHALL BE INCLUDED IN THE BID PRICE FOR ITEM 516.10 BRIDGE EXPANSION JOINT, ASPHALTIC PLUG. ANY REMOVAL OF MATERIAL GREATER THAN 4 INCHES SHALL BE INCLUDED IN THE BID PRICE OF ITEM 580.20 RAPID SETTING CONCRETE REPAIR MATERIAL WITH COURSE AGGREGATE.

2. THE CONTRACTOR SHALL REPLACE REMOVED MATERIAL THAT IS LESS THAN 4" FROM FINISHED GRADE WITH ASPHALTIC PLUG JOINT MATERIAL MEETING THE REQUIREMENTS OF SUBSECTION 707.15. ALL REMOVED MATERIAL THAT IS GREATER THAN 4 INCHES FROM FINISHED GRADE SHALL BE REPLACED WITH RAPID SETTING CONCRETE REPAIR MATERIAL WITH COARSE AGGREGATE MEETING THE REQUIREMENTS OF SUBSECTION 780.04.

3. REINFORCING STEEL NOT SHOWN FOR CLARITY.

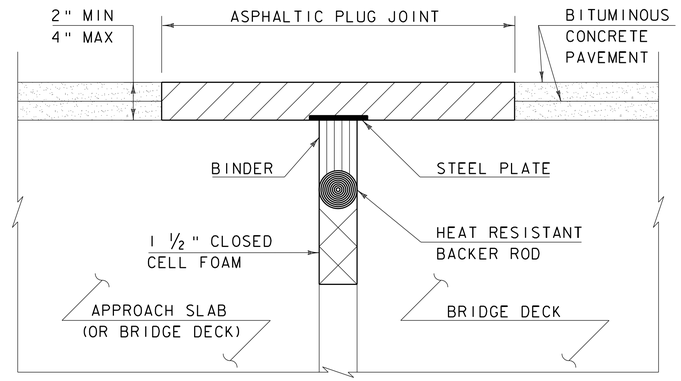

ASPHALTIC PLUG-TYPE JOINT DETAIL - NEW

(NOT TO SCALE)

ASPHALTIC PLUG JOINT NOTES

INSTALLATION:

1. LOCATE THE JOINT CENTRALLY OVER THE DECK OVERLAY EXPANSION GAP OR FIXED JOINT, MARKED OUT TO THE MANUFACTURER'S RECOMMENDED WIDTH.

2. REMOVE THE BITUMINOUS CONCRETE PAVEMENT FULL DEPTH AS SHOWN ON THE PLANS. THE PAVEMENT SHALL BE DRY AND SAW CUT TO THE LIMITS REQUIRED TO PLACE THE JOINT. A PNEUMATIC HAMMER AND CHISEL MAY BE USED ADJACENT TO THE CURB ONLY WHEN SAW CUTTING IS NOT POSSIBLE.

3. BLAST CLEAN THE JOINT AREA OF DEBRIS, ASPHALT AND SHEET MEMBRANE. THOROUGHLY DRY THE JOINT AREA WITH COMPRESSED AIR PRIOR TO APPLYING BINDER MATERIAL.

4. REPAIR MATERIAL GREATER THAN 4 INCHES FROM FINISHED GRADE WITH RAPID SETTING CONCRETE REPAIR MATERIAL WITH COARSE AGGREGATE MEETING THE REQUIREMENTS OF SUBSECTION 780.04.

5. PLACE PROPERLY SIZED HEAT RESISTANT BACKER ROD IN THE MOVEMENT GAP ALLOWING FOR 1" +/- OF BINDER ABOVE THE ROD.

6. HEAT AND PLACE THE BINDER MATERIAL AS RECOMMENDED BY THE MANUFACTURER.

7. PLACE 1/4" THICK BY 8" WIDE SECTIONS OF STEEL PLATE OVER THE CENTER OF THE MOVEMENT GAP. SECURE THE PLATES FROM MOVING BY INSERTING LOCATING PINS THROUGH THE PRE-STAMPED HOLES INTO BACKER ROD AND COVER WITH HOT BINDER. THE STEEL PLATES MAY BE OMITTED WHERE THE ENGINEER DETERMINES THAT THE APPROACH SLAB OR BRIDGE DECK WILL PROVIDE INADEQUATE SUPPORT AND WHERE VERTICAL MOVEMENT OF THE PLATES MIGHT OCCUR.

8. HEAT AND MIX THE BINDER MATERIAL AND AGGREGATE AS RECOMMENDED BY THE MANUFACTURER.

9. INSTALLATION OF MATERIAL, COMPACTION, AND TOP COATING SHALL BE AS RECOMMENDED BY THE MANUFACTURER.

10. IMMEDIATELY AFTER TOP COATING, CAST AN ANTI-SKID MATERIAL OVER THE JOINT TO REDUCE THE RISK OF TRACKING.

11. ONCE THE JOINT REACHES 82 DEG C (180 DEG F) +/-, WATER MAY BE USED TO EXPEDITE THE COOLING PROCESS.

12. PROTECT JOINT FROM TRAFFIC UNTIL THE MATERIAL HAS COOLED TO 51 DEG C (125 DEG F) +/-.

WEATHER LIMITATIONS

APPLY BINDER MATERIAL ONLY WHEN THE FOLLOWING CONDITIONS PREVAIL OR AS RECOMMENDED BY THE MANUFACTURER:

1. THE AMBIENT AIR TEMPERATURE IS AT LEAST 10 DEG C (50 DEG F) AND RISING.

2. THE ROAD SURFACE IS DRY.

3. WEATHER CONDITIONS OR OTHER CONDITIONS ARE FAVORABLE AND ARE EXPECTED TO REMAIN SO FOR THE PERFORMANCE OF SATISFACTORY WORK.

REVISIONS	
MAY 7, 2010	APPROVED FOR USE BY VAOT STRUCTURES SECTION

BRIDGE JOINT ASPHALTIC PLUG

VERMONT AGENCY OF TRANSPORTATION
STRUCTURES - DIVISION

STRUCTURES DETAIL

SD-516.10

STRUCTURAL STEEL GENERAL NOTES:

1. ALL FIELD CONNECTIONS SHALL BE MADE WITH 7/8" DIAMETER HIGH-STRENGTH BOLTS IN 15/16" DIAMETER HOLES, PER SUBSECTION 506.19, UNLESS OTHERWISE SPECIFIED.
2. ALL HOLES IN THE WEBS OF THE FASCIA GIRDERS THAT ARE NOT OTHERWISE FILLED, SHALL BE FILLED WITH EITHER BUTTON HEAD OR HEX HEAD BOLTS. THESE BOLTS SHALL BE TIGHTENED IN ACCORDANCE WITH SUBSECTION 506.19.
3. ALL WELDING SHALL CONFORM TO THE PROVISIONS OF SUBSECTION 506.10.
4. ANY CONNECTIONS THAT ARE NOT DETAILED ON THE PLANS SHALL BE DETAILED BY THE FABRICATOR AND SUBMITTED TO THE STRUCTURES ENGINEER FOR APPROVAL.
5. STRUCTURAL STEEL MEMBERS DESIGNATED "CVN" IN THE PLANS SHALL BE CHARPY V-NOTCH TESTED IN ACCORDANCE WITH SUBSECTION 714.01 OF THE STANDARD SPECIFICATIONS.
6. ENDS OF GIRDERS ARE TO BE VERTICAL IN THEIR FINAL POSITION.
7. AFTER SUPERSTRUCTURE STEEL HAS BEEN ERECTED, ELEVATIONS ALONG THE TOP OF THE GIRDERS SHALL BE TAKEN AS DIRECTED BY THE RESIDENT ENGINEER FOR USE IN DETERMINING FINISHED GRADES.

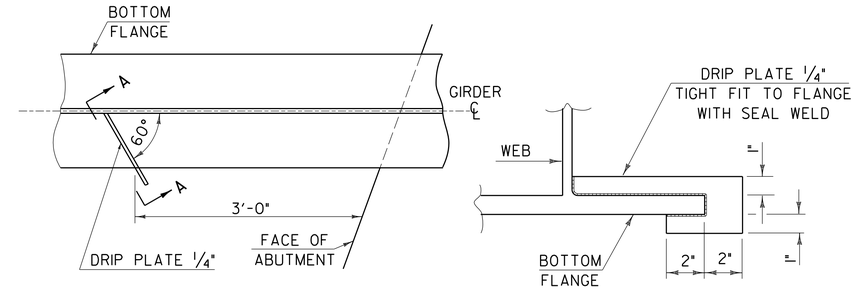

PLAN DRIP PLATE

SECTION A - A

NOTE: DRIP PLATES SHALL BE PLACED ON OUTSIDE EDGE OF FASCIA GIRDERS ON THE HIGH SIDE OF ALL PIERS AND ABUTMENTS OR AS INDICATED ON PROJECT PLANS.

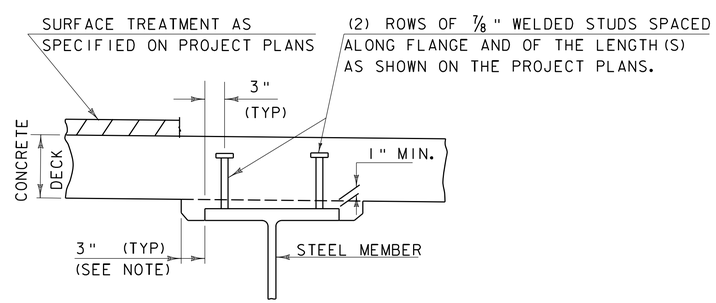

NOTE:
THE 3" HORIZONTAL SECTION MAY BE ELIMINATED FOR FORMING SYSTEMS DESIGNED FOR THE CONSTRUCTION OF VERTICAL HAUNCHES. ANY VOIDS RESULTING FROM FORMING SYSTEM ELEMENTS SHALL BE FILLED WITH JOINT SEALER, POLYURETHANE MEETING THE REQUIREMENTS OF SECTION 524. THE COST OF THE JOINT SEALER, POLYURETHANE SHALL BE INCIDENTAL TO THE ADJACENT CONCRETE.

HAUNCH AND SHEAR CONNECTOR DETAIL

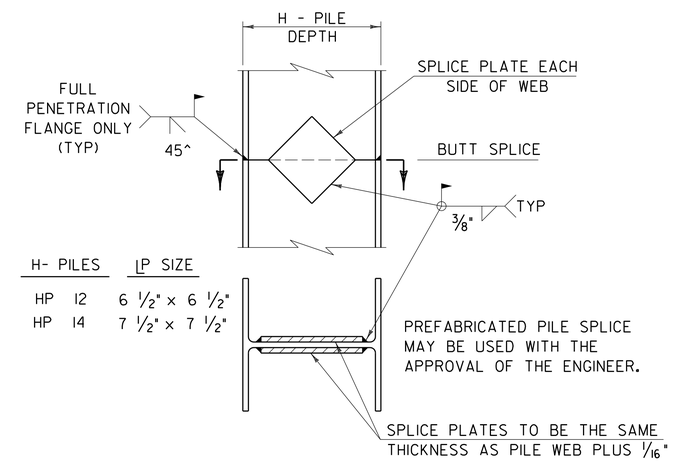

H- PILES	LP SIZE
HP 12	6 1/2" x 6 1/2"
HP 14	7 1/2" x 7 1/2"

DETAIL OF PILE SPLICE

DETAILS ON THIS SHEET ARE "NOT TO SCALE" UNLESS NOTED OTHERWISE.

REVISIONS	
MAY 7, 2010	APPROVED FOR USE BY VAOT STRUCTURES SECTION
JUNE 4, 2010	MODIFIED NOTES

STRUCTURAL STEEL DETAILS & NOTES

VERMONT AGENCY OF TRANSPORTATION
STRUCTURES - SECTION

STRUCTURES DETAIL

SD-601.00

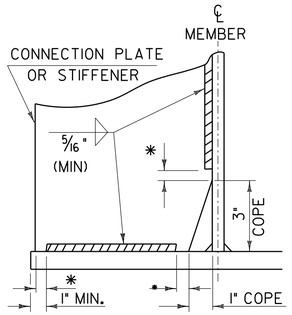

WELD TERMINATION AND COPING DETAILS FOR STEEL MEMBERS

*NO WELD FOR 3/8" MIN. 7/8" MAX. (EXCEPT MUST MAINTAIN 1" MINIMUM FROM EDGE OF FLANGE)

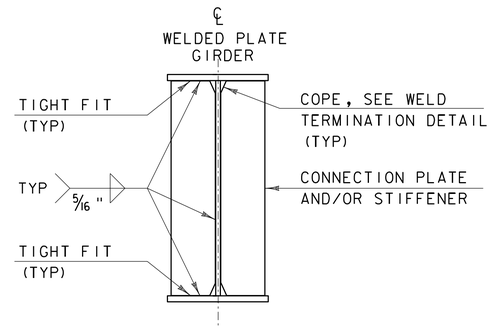

INTERMEDIATE CONNECTION PLATES AND/OR STIFFENERS FOR WELDED PLATE GIRDERS

INTERMEDIATE DETAIL IS ONLY USED WHEN PLATE DOES NOT OCCUR AT AN ABUTMENT OR PIER.

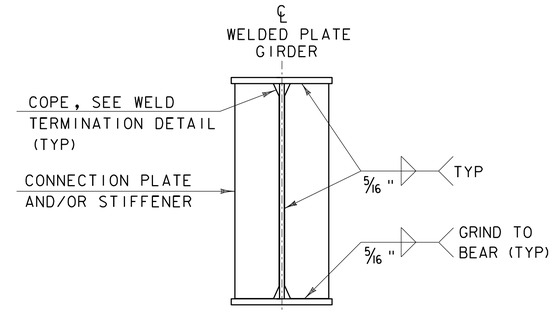

ABUTMENT BEARING STIFFENERS AND/OR CONNECTION PLATES FOR WELDED PLATE GIRDERS

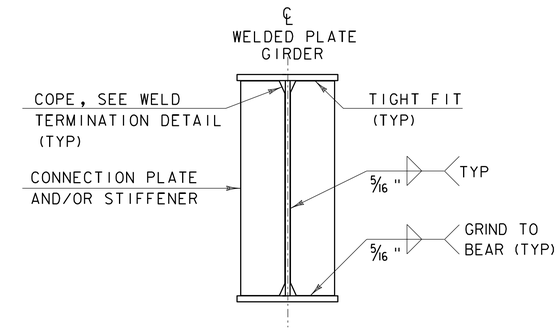

PIER BEARING STIFFENERS AND/OR CONNECTION PLATES FOR WELDED PLATE GIRDERS

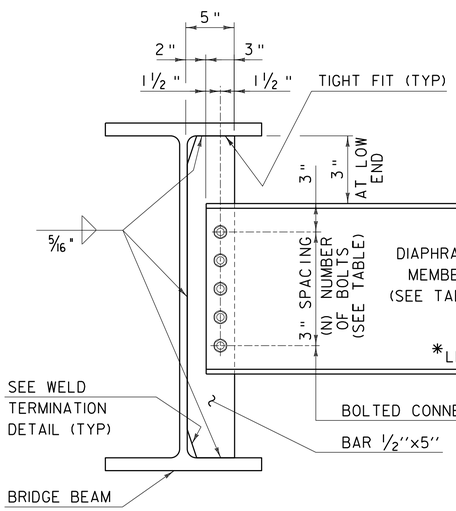

DEPTH		DIAPHRAGM MEMBER	(N) BOLTS
ROLLED BEAM	24" 30"	C15x33.9	4
	31" 36"	MC18x42.7	5
	37" 42"	W21x44	6
PLATE GIRDER WEB	31" 36"	W27x84	7
	37" 42"	W33x118	9
	43" 48"	W36x135	10

INTERMEDIATE DIAPHRAGMS FOR 24" TO 48" BRIDGE BEAMS

* IF CLEARANCE CANNOT BE MET, DIAPHRAGM MAY BE SLOPED.

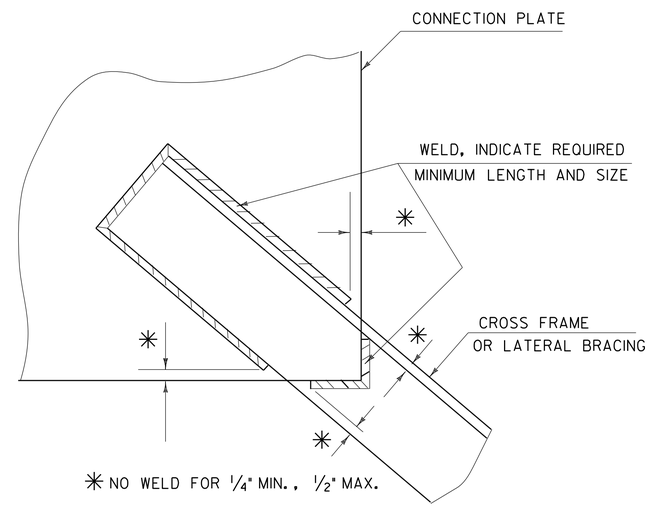

WELD LOCATION DETAIL AT CROSS FRAMES AND LATERAL BRACING

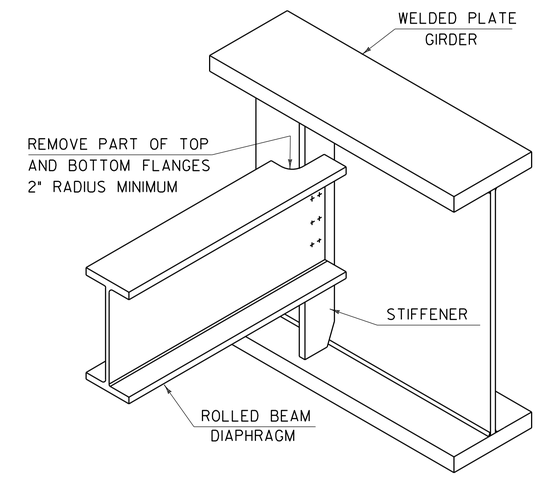

SEE CONTRACT DRAWINGS FOR SIZES OF MEMBERS AND CONNECTION DETAILS

ROLLED BEAM USED AS DIAPHRAGM

DETAILS ON THIS SHEET ARE "NOT TO SCALE" UNLESS NOTED OTHERWISE.

REVISIONS	
MAY 7, 2010	APPROVED FOR USE BY VAOT STRUCTURES SECTION
MAY 2, 2011	ADD INTERMEDIATE DIAPHRAGMS DETAIL & ADD NOT TO SCALE NOTE

STRUCTURAL STEEL PLATE GIRDER DETAILS AND NOTES

VERMONT AGENCY OF TRANSPORTATION * STRUCTURES - SECTION *

STRUCTURES DETAIL

SD-602.00