REVIEW NOTES
GUILFORD BRO 1442(36) – BRIDGE NO. 65
RETAINING WALL SUBMITTAL
AUGUST 25, 2014

RE: Redi Rock Retaining Wall received from Renaud Bros. Inc on 8/21/2014.

VHB Project No.: 57427.00

These notes accompany the review of the Redi Rock Retaining Wall Submittal reviewed by VHB on 8/25/2014.

General Notes:

1. Revise wall radius to be 50' as shown on the Contract Plans.

SUBMITTAL REVIEW

☐ Reviewed and approved but only for conformance to the Construction Contract Documents.

☒ Revise and Resubmit

Corrections or comments made during this review do not relieve the Contractor or his Designer from compliance with professional requirements or for responsibility for the adequacy of the submittal information. This check is only for review of general conformance with industry standards and general compliance with the information given in the Contract Documents. VHB has not conducted a detailed review of the submittal and has not performed calculations or assessed the adequacy of loads, design criteria, quantities, dimensions, etc. Approval of the submittal does not constitute VHB's approval of any construction means, methods or techniques. These remain the responsibility of the Contractor.

Vanasse Hangen Brustlin, Inc.
7056 US Route 7 • Post Office Box 120
North Ferrisburgh, VT 05473
802.425.7788

Job Number: 57427.00
Reviewed By: E.A. Fiala
Date: August 25, 2014

This submittal is for sheets 1-11, inclusive, of the "Guilford BRO 1442 (36) – Retaining Wall 002.pdf" submittal received on 8/21/2014.

RENAUD BROS., INC.

283 Fort Bridgeman Road #2, Vernon, VT 05354 **phone (802) 257-7383**
fax (802) 257-7308

Guilford BRO 1442 (36)
Retaining Wall Submittal

Table of Contents **Page#**

Cover & Table of Contents	1
Retaining Wall Plans	2-3
Retaining Wall Calculations	4-9
Retaining Wall Block Details	10-11

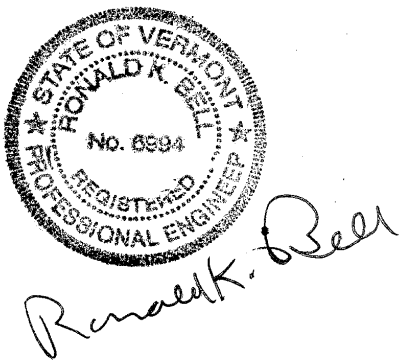

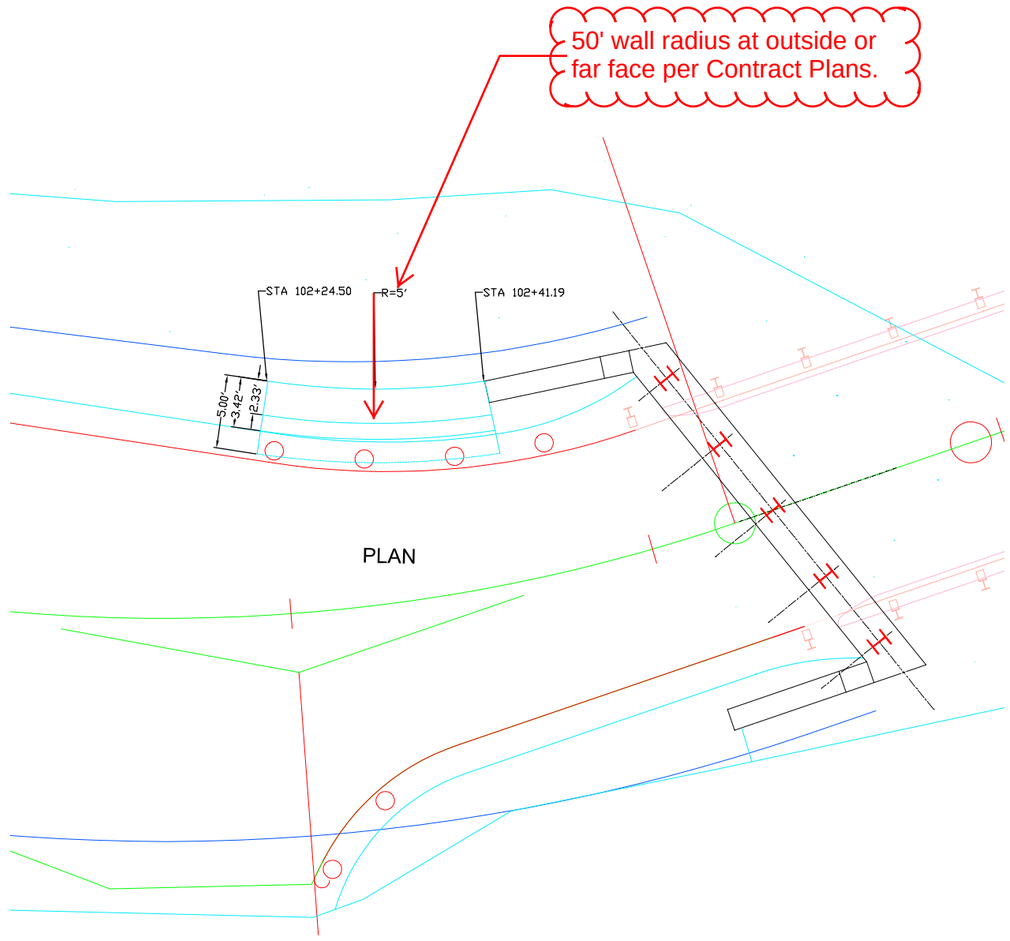

PLAN

Vermont Agency of Transportation

RECEIVED

Guilford BRO 1442 (36) - Retaining Wall 002.pdf

CK'D BY MJC OK'D BY TAS

August 20, 2014

RESUBMIT Yes Rejected

BY M. J. Chenette DATE 08/25/2014

REV. NO.	DATE:
1	??/??/??

BRENAUD BROS. INC.
283 Ft. BRIDGMAN RD. VERNON VT., 05354
PH. (802) 257-7583 FAX: (802) 257-7508

SHEET NAME: RETAINING WALL PLAN

PROJECT NAME: GUILFORD BRO

PROJECT NO: 1442 (36)

DRAWN BY: CDE | CHK'D BY: | DATE: 07/21/2014

SHEET NO. 1 OF 8

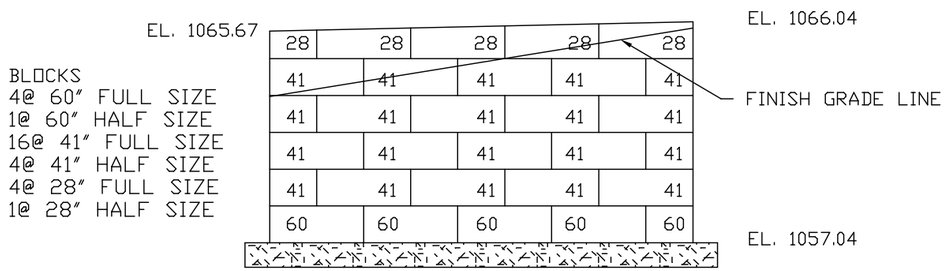

ELEVATION

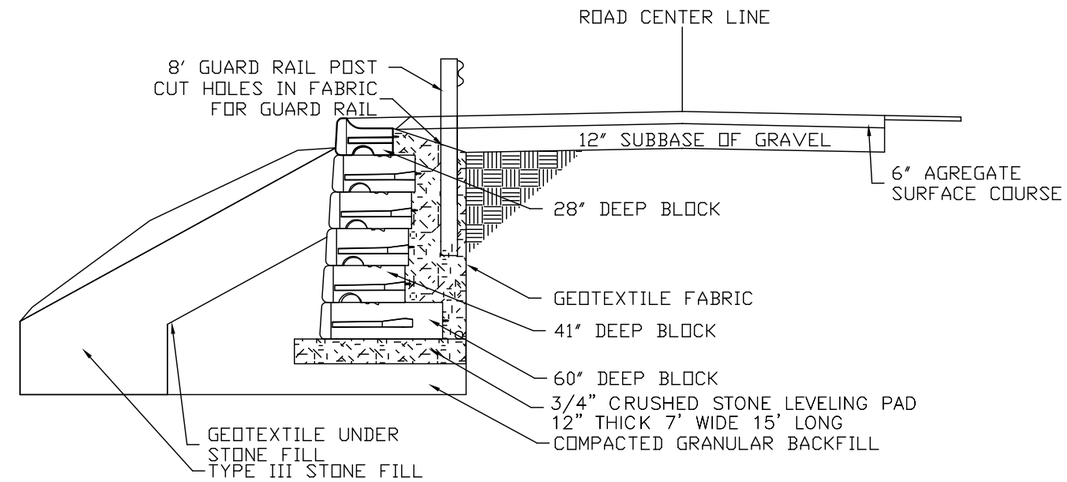

SECTION
STA 102+31

Vermont Agency of Transportation
RECEIVED
Guilford BRO 1442 (36) - Retaining Wall 002.pdf

CK'D BY MJC OK'D BY TAS

August 20, 2014

RESUBMIT Yes Rejected

BY M. J. Chenette DATE 08/25/2014

NOTES:
1. ALL BLOCKS ARE REDI ROCK LIME STONE FINISHED BLOCKS.

REV. NO.	DATE:
1	??/??/??

RENAUD BROS. INC.
285 FT. BRIDGMAN RD. VERNON VT., 05354
PH. (802) 257-7583 FAX: (802) 257-7508

SHEET NAME: RETAINING WALL ELEVATION AND SECTION
PROJECT NAME: GUILFORD BRO
PROJECT NO: 1442 (36)
DRAWN BY: CDE
CHK'D BY:
DATE: 07/21/2014
SHEET NO. 2 OF 8

Analysis of Redi Rock wall

Input data

Project

Task : GUILFORD VERMONT
Descript. : RETAINING WALL
Author : RON BELL
Customer : RENAUD BROTHERS CONSTRCUTION
Date : 8/19/2014

Settings

(input for current task)

Wall analysis

Active earth pressure calculation : Coulomb
Passive earth pressure calculation : Caqout-Kerisel
Earthquake analysis : Mononobe-Okabe
Shape of earth wedge : Calculate as skew
Reduction coeff. of contact first block - base : 0.70
Verification methodology : according to LRFD

Partial factors on loads (L)					
Permanent design situation					
		Favourable		Unfavourable	
Dead load of structural components :	DC =	0.90	[–]	1.25	[–]
Dead load of wearing surfaces :	DW =	0.65	[–]	1.35	[–]
Earth pressure load :	EH =	0.90	[–]	1.50	[–]
Earth surcharge load (permanent) :	ES =	0.75	[–]	1.50	[–]
Vertical pressure of earth fill :	EV =	1.00	[–]	1.35	[–]
Live load surcharge :	LS =	0.00	[–]	1.75	[–]
Water load :	WA =	1.00	[–]	1.00	[–]

Partial factors for resistances (R)			
Permanent design situation			
Partial factor on overturning :	γ_{Re} =	0.90	[–]
Partial factor on sliding resistance :	γ_{Rh} =	0.80	[–]
Partial factor on bearing capacity :	γ_{Rv} =	0.45	[–]
Partial factor on passive resistance :	γ_{Rp} =	0.50	[–]

Blocks

No.	Description	Height h [in]	Width w [in]	Unit weight γ [pcf]
1	Block 28	18.00	27.75	130.00
2	Block 41	18.00	40.50	130.00
3	Block 60	18.00	60.00	130.00
4	Top block 24	18.00	24.00	130.00
5	Planter 41	18.00	40.50	112.00

No.	Description	Shear cap. F [lbf/ft]	Max. shear cap. F_{max} [lbf/ft]	Friction f [°]	Cohesion c [psf]
1	Block 28	1700.00	9000.00	75.00	0.0
2	Block 41	1700.00	9000.00	75.00	0.0

[GEO5 pro Redi - Redi Rock Wall | version 5.15.16.0 | Copyright © 2013 Fine spol. s r.o. All Rights Reserved | www.finesoftware.eu]

No.	Description	Shear cap. F [lbf/ft]	Max. shear cap. F_{max} [lbf/ft]	Friction f [°]	Cohesion c [psf]
3	Block 60	1700.00	9000.00	75.00	0.0
4	Top block 24	1700.00	9000.00	75.00	0.0
5	Planter 41	1700.00	9000.00	75.00	0.0

Setbacks

No.	Setback s [in]
1	0.375
2	1.625
3	9.375
4	16.625

Geometry

No. group	Description	Count	Setback s [in]
1	Block 60	1	1.62
2	Block 41	4	1.62
3	Block 28	1	1.62

Base

Geometry

Upper setback a_1 = 0.50 ft
Lower setback a_2 = 0.50 ft
Height h = 1.00 ft
Width b = 6.00 ft

Material

Soil creating foundation - CRUSHED STONE
Soil bearing capacity R_d = 6000.0 psf

Basic soil parameters

Number	Name	Pattern	φ_{ef} [°]	c_{ef} [psf]	γ [pcf]	γ_{su} [pcf]	δ [°]
1	Well graded gravel (GW), dense		41.50	0.0	133.00	70.50	32.00
2	Poorly graded gravel (GP), dense	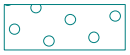	38.50	0.0	127.00	70.50	32.00
3	CRUSHED STONE	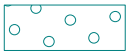	40.00	0.0	130.00	77.50	26.00

All soils are considered as cohesionless for at rest pressure analysis.

Soil parameters

Well graded gravel (GW), dense

Unit weight : γ = 133.0 pcf
Stress-state : effective
Angle of internal friction : φ_{ef} = 41.50 °
Cohesion of soil : c_{ef} = 0.0 psf
Angle of friction struc.-soil : δ = 32.00 °

[GEO5 pro Redi - Redi Rock Wall | version 5.15.16.0 | Copyright © 2013 Fine spol. s r.o. All Rights Reserved | www.finesoftware.eu]

Saturated unit weight : γ_{sat} = 133.0 pcf

Poorly graded gravel (GP), dense

Unit weight : γ = 127.0 pcf
Stress-state : effective
Angle of internal friction : φ_{ef} = 38.50 °
Cohesion of soil : c_{ef} = 0.0 psf
Angle of friction struc.-soil : δ = 32.00 °
Saturated unit weight : γ_{sat} = 133.0 pcf

CRUSHED STONE

Unit weight : γ = 130.0 pcf
Stress-state : effective
Angle of internal friction : φ_{ef} = 40.00 °
Cohesion of soil : c_{ef} = 0.0 psf
Angle of friction struc.-soil : δ = 26.00 °
Saturated unit weight : γ_{sat} = 140.0 pcf

Geological profile and assigned soils

Number	Layer [ft]	Assigned soil	Pattern
1	12.00	Well graded gravel (GW), dense	
2	-	Poorly graded gravel (GP), dense	

Terrain profile

Terrain behind construction has the slope 1: 5.00 (slope angle is 11.31 °).

Water influence

GWT behind the structure lies at a depth of 8.00 ft
Uplift in foot. bottom due to different pressures is not considered.

Input surface surcharges

Number	Surcharge new	Surcharge change	Action	Mag.1 [lbf/ft²]	Mag.2 [lbf/ft²]	Ord.x x [ft]	Length l [ft]	Depth z [ft]
1	YES		permanent	250.0				on terrain

Number	Name
1	VEHICLE SURCHARGE

Resistance on front face of the structure

Resistance on front face of the structure: at rest
Soil on front face of the structure - Poorly graded gravel (GP), dense
Soil thickness in front of structure h = 1.50 ft

Terrain in front of structure is flat.

Settings of the stage of construction

Design situation : permanent

[GEO5 pro Redi - Redi Rock Wall | version 5.15.16.0 | Copyright © 2013 Fine spol. s r.o. All Rights Reserved | www.finesoftware.eu]

Verification No. 1

Forces acting on construction

Name	F_{hor} [lbf/ft]	App.Pt. Z [ft]	F_{vert} [lbf/ft]	App.Pt. X [ft]	Coeff. overtur.	Coeff. sliding	Coeff. stress
Weight - wall	0.0	-4.18	4739.8	2.69	0.900	0.900	1.250
FF resistance	-53.9	-0.50	0.1	0.25	0.900	0.900	1.500
Weight - earth wedge	0.0	-1.45	23.6	5.66	1.000	1.000	1.350
Weight - earth wedge	0.0	-3.59	322.5	4.58	1.000	1.000	1.350
Weight - earth wedge	0.0	-9.58	293.5	3.20	1.000	1.000	1.350
Active pressure	1523.9	-3.46	2343.8	5.17	1.500	0.900	1.500
Water pressure	125.0	-0.67	0.0	3.67	1.000	1.000	1.000
Uplift pressure	0.0	-10.00	0.0	1.59	1.000	1.000	1.000
VEHICLE SURCHARGE	554.1	-5.16	849.2	4.81	1.500	0.750	1.500

Verification of complete wall

Check for overturning stability

Resisting moment M_{res} = 34486.7 lbfft/ft
Overturning moment M_{ovr} = 12268.1 lbfft/ft

Wall for overturning is SATISFACTORY

Check for slip

Resisting horizontal force H_{res} = 5415.76 lbf/ft
Active horizontal force H_{act} = 1863.55 lbf/ft

Wall for slip is SATISFACTORY

Overall check - WALL is SATISFACTORY

Maximum stress in footing bottom :2133.3psf

Bearing capacity of foundation soil

Forces acting at the centre of the footing bottom

Number	Moment [lbfft/ft]	Norm. force [lbf/ft]	Shear Force [lbf/ft]	Eccentricity [ft]	Stress [psf]
1	3316.3	11577.76	3161.11	0.31	1804.0
2	1927.0	7651.76	1863.55	0.29	2133.3

Bearing capacity of foundation soil check

Eccentricity verification

Max. eccentricity of normal force e = 3.76 in
Maximum allowable eccentricity e_{alw} = 23.76 in

Eccentricity of the normal force is SATISFACTORY

Footing bottom bearing capacity verification

Design bearing capacity of foundation soil R = 5000.0 psf
Partial factor on earth resistance γ_{Rv} = 0.45
Max. stress at footing bottom σ = 2133.3 psf
Bearing capacity of foundation soil R_d = 2250.0 psf

[GEO5 pro Redi - Redi Rock Wall | version 5.15.16.0 | Copyright © 2013 Fine spol. s r.o. All Rights Reserved | www.finesoftware.eu]

Bearing capacity of foundation soil is SATISFACTORY

Overall verification - bearing capacity of found. soil is SATISFACTORY

Dimensioning No. 1

Forces acting on construction

Name	F_{hor} [lbf/ft]	App.Pt. Z [ft]	F_{vert} [lbf/ft]	App.Pt. X [ft]	Coeff. overtur.	Coeff. sliding	Coeff. stress
Weight - wall	0.0	-3.91	3959.8	2.13	0.900	0.900	1.250
FF resistance	-6.0	-0.17	0.0	0.00	0.900	0.900	0.900
Weight - earth wedge	0.0	-2.59	322.5	4.08	1.000	1.000	1.350
Weight - earth wedge	0.0	-8.58	293.5	2.70	1.000	1.000	1.350
Active pressure	1214.6	-3.14	1684.6	4.40	1.500	1.500	1.500
Water pressure	31.2	-0.33	0.0	3.17	1.000	1.000	1.000
Uplift pressure	0.0	-9.00	0.0	1.09	1.000	1.000	1.000
VEHICLE SURCHARGE	489.7	-4.73	707.0	4.10	1.500	1.500	1.500

Verification of block No.1

Check for overturning stability

Resisting moment M_{res} = 22627.4 lbfft/ft
Overturning moment M_{ovr} = 9201.4 lbfft/ft

Joint for overturning stability is SATISFACTORY

Check for slip

Resisting horizontal force H_{res} = 4562.23 lbf/ft
Active horizontal force H_{act} = 2582.28 lbf/ft

Joint for verification is SATISFACTORY

Verification of bearing capacity of soil:

Maximum stress σ = 2236.4 psf
Bearing capacity of footing material R_d = 2700.0 psf

Footing bearing capacity is SATISFACTORY

[GEO5 pro Redi - Redi Rock Wall | version 5.15.16.0 | Copyright © 2013 Fine spol. s r.o. All Rights Reserved | www.finesoftware.eu]

Name :	Settings	Stage : 1

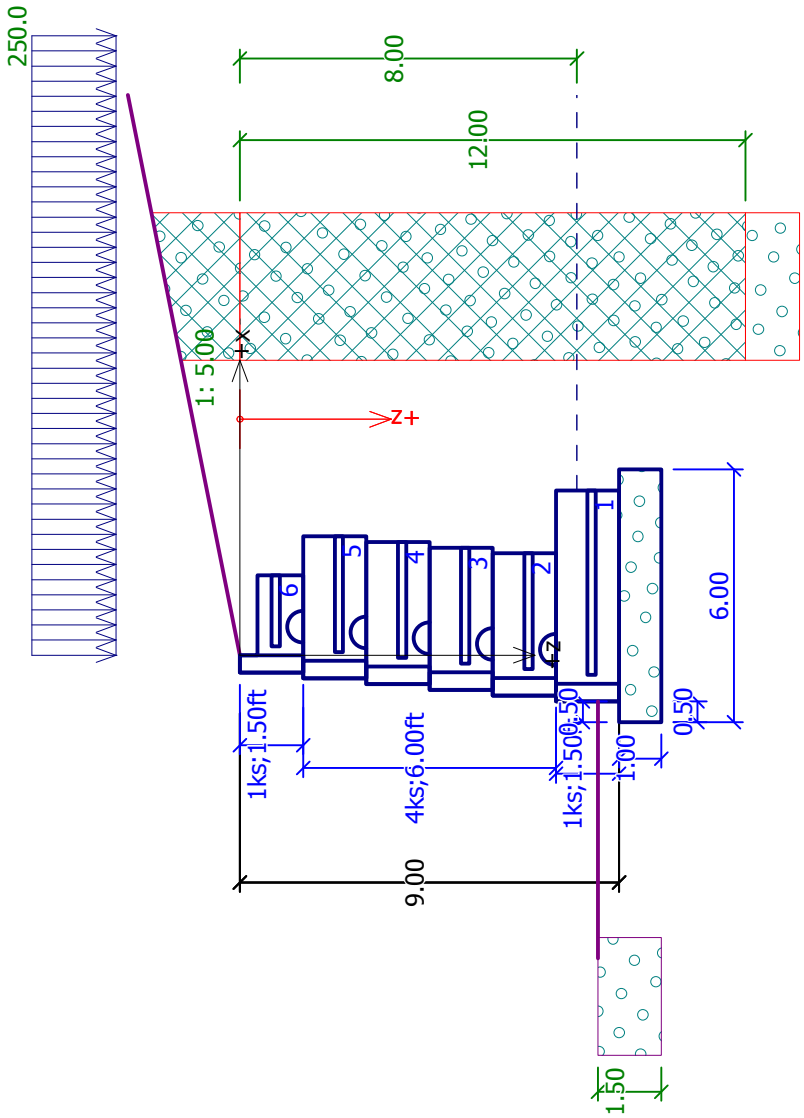

[GEO5 pro Redi - Redi Rock Wall | version 5.15.16.0 | Copyright © 2013 Fine spol. s r.o. All Rights Reserved | www.finesoftware.eu]

41" SERIES BLOCKS

Top - 28"
Volume = 8.55 cft
Weight = ±1223 lbs
C of G = 15.06"

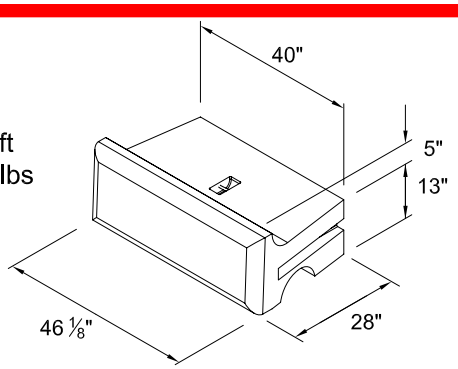

Half Top - 28"
Volume = 4.13 cft
Weight = ±591 lbs

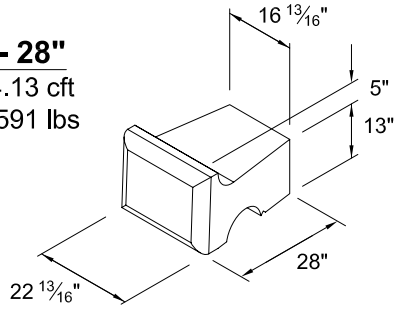

Middle - 41"
Volume = 16.44 cft
Weight = ±2351 lbs
C of G = 20.92"

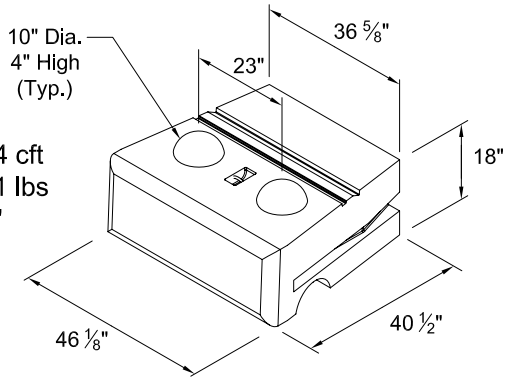

Half Middle - 41"
Volume = 7.28 cft
Weight = ±1041 lbs

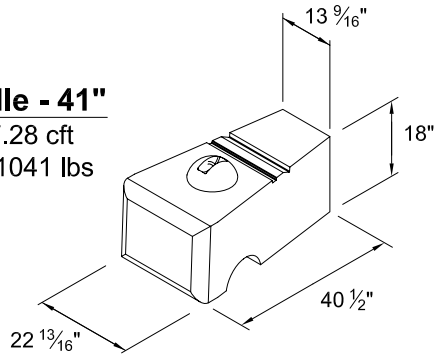

Bottom - 41"
Volume = 17.37 cft
Weight = ±2483 lbs
C of G = 21.3"

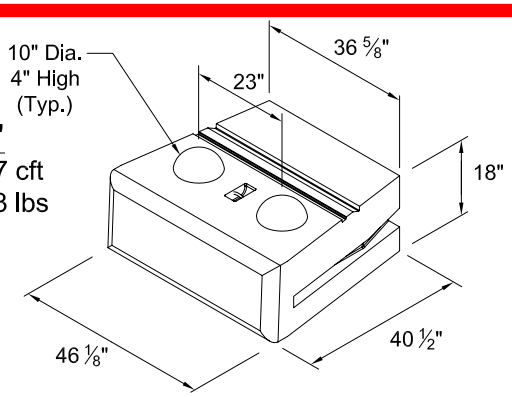

Half Bottom - 41"
Volume = 7.73 cft
Weight = ±1105 lbs

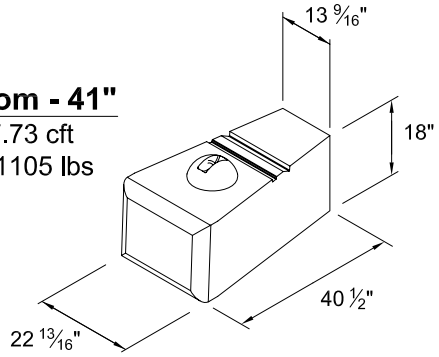

Planter
Volume = 14.12 cft
Weight = ±2020 lbs
C of G = 19.35"

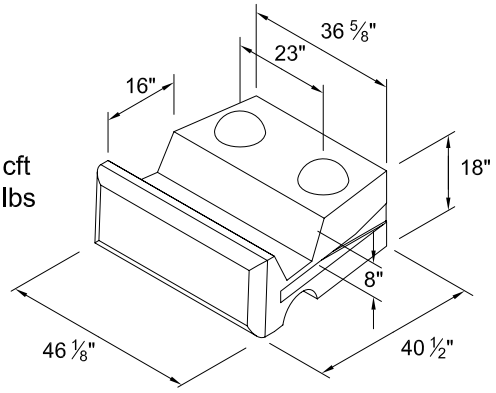

Half Planter
Volume = 5.91 cft
Weight = ±890 lbs

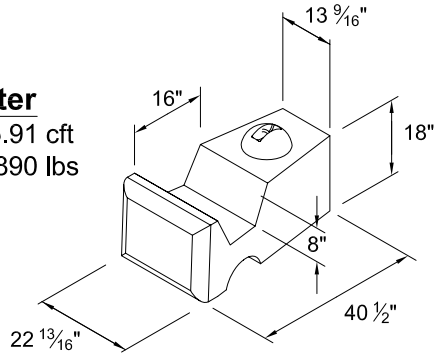

NOTES:

Volume and Center of Gravity (C of G) calculations are based on the blocks as shown.

Center of Gravity is measured from the back of the block.

Half blocks may include a fork lift slot on one side.

Actual weights and volumes may vary.

Weight shown is based on 143 pcf concrete.

DRAWN BY J. JOHNSON	01/09/09	Redi-Rock® International, LLC	
CHECKED BY			
APPROVED BY		DRAWING FILE 41in Series Blocks 010909.dwg	REVISION ---
ISSUE DATE		SCALE NO SCALE	SHEET NO. 1 OF 1

60" BLOCKS

Middle - 60"

Volume = 23.0 cft
Weight = ±3290 lbs
C of G = 31.28"

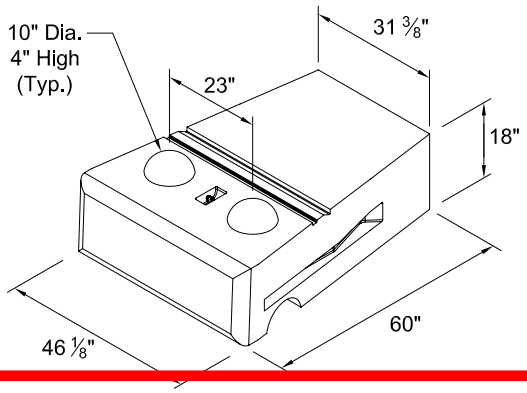

Half Middle - 60"

Volume = 9.31 cft
Weight = ±1331 lbs

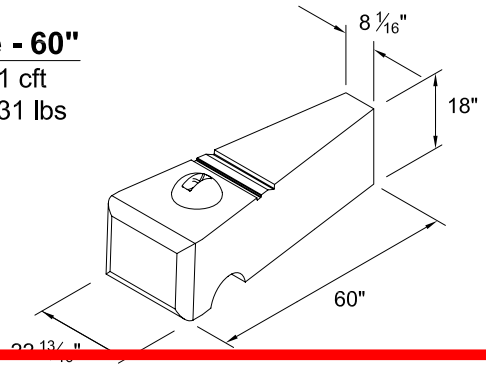

Bottom - 60"

Volume = 23.9 cft
Weight = ±3420 lbs
C of G = 31.90"

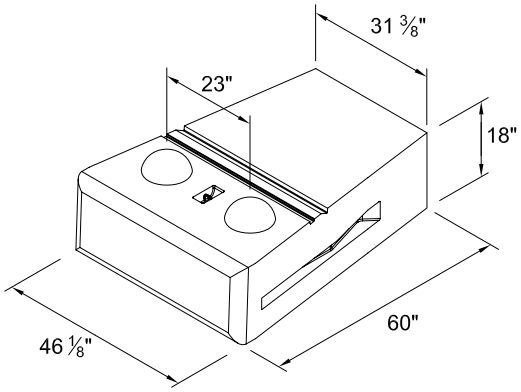

Half Bottom - 60"

Volume = 9.75 cft
Weight = ±1394 lbs

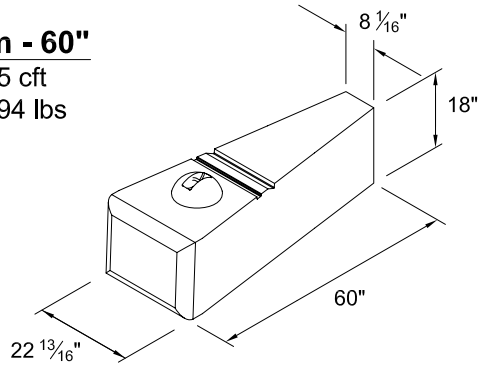

NOTES:

The 60" block is typically used as a bottom block in a larger wall. See the 41" Series for additional blocks and steps.

Volume and Center of Gravity (C of G) calculations are based on the blocks as shown.

Center of Gravity is measured from the back of the block.

Half blocks may include a fork lift slot on one side.

Actual weights and volumes may vary.

Weight shown is based on 143 pcf concrete.

DRAWN BY J. JOHNSON	01/12/09	Redi-Rock® International, LLC	
CHECKED BY			
APPROVED BY		DRAWING FILE 60in Block Details 011209.dwg	REVISION ---
ISSUE DATE		SCALE NO SCALE	SHEET NO. 1 OF 1