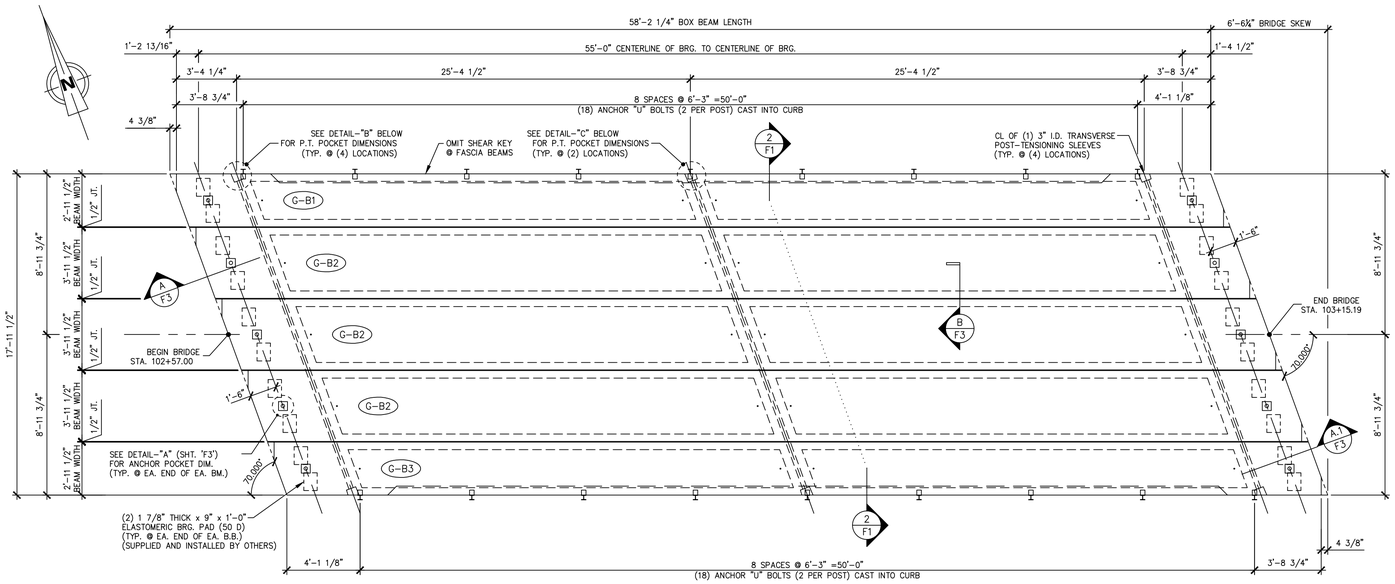

1 / F1 PRESTRESSED BOX BEAM LAYOUT

1/4" = 1'-0"

DESIGN LIVE LOAD: HL-93

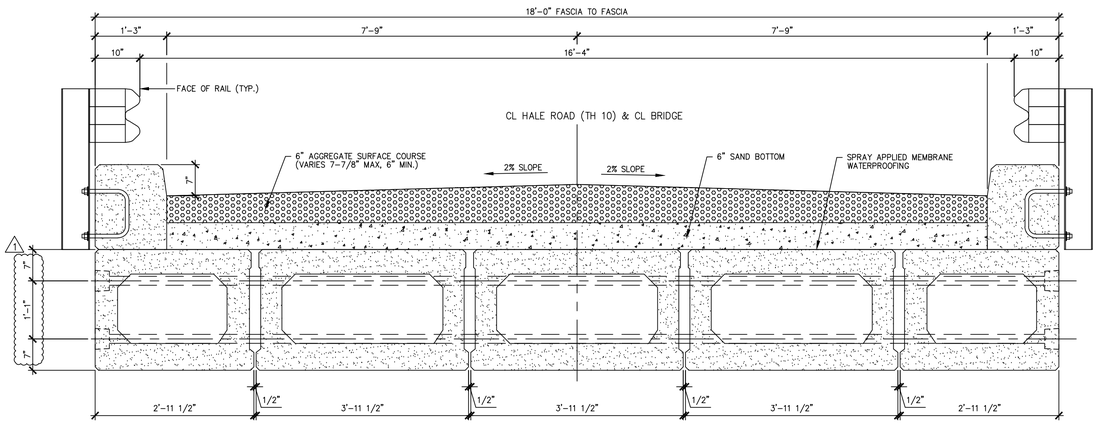

2 / F2 APPROACH SLAB TRANSVERSE SECTION

3/4" = 1'-0"

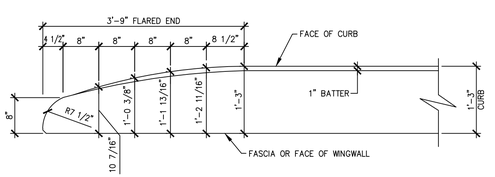

CURB REINFORCING STIRRUP BARS SHALL BE TURNED AS REQUIRED TO FIT FLARED ENDS

FLARED END DETAIL FOR 1'-3" CURB

3/4" = 1'-0"

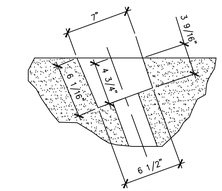

PLAN OF POCKET

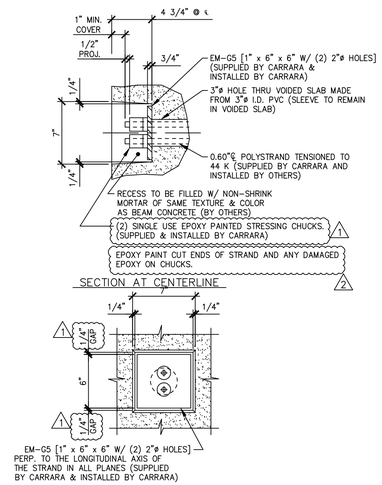

DETAIL – "C"

1 1/2" = 1'-0"

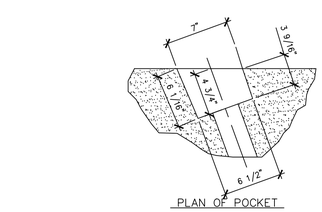

PLAN OF POCKET

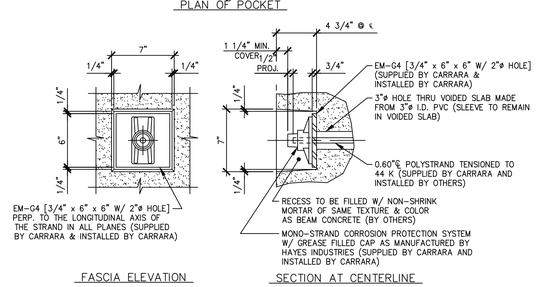

DETAIL – "B"

1 1/2" = 1'-0"

GENERAL NOTES

1. MIN. CONCRETE STRENGTH AT 28 DAYS SHALL BE 6,000 PSI.
2. MIN. CONCRETE STRENGTH AT STRESS TRANSFER SHALL BE 4,800 PSI.
3. REINFORCING STEEL SHALL BE GR-60, ASTM A-615 (AASHTO M31) AND SHALL BE BLACK BAR WITH THE EXCEPTION OF REINFORCEMENT IN BOX BEAMS AND CURBS WHICH SHALL BE LEVEL II – DUAL COATED
4. PRESTRESSING STRANDS SHALL CONFORM TO ASTM A-416 (AASHTO M203) AND SHALL CONSIST OF 0.60"ø x 270 KSI 7-WIRE LOW RELAXATION STRANDS.
5. PRESTRESSING STRANDS SHALL EACH BE PULLED TO HAVE A NET TENSION OF 44.0 K AFTER ACCOUNTING FOR CHUCK SLIPPAGE. TENSION SHALL BE VERIFIED BY MEASURING STRAND ELONGATION. (SEE EXAMPLE ELONGATION CALCULATION AND TENSIONING PROCEDURE, THIS SHEET.)
6. ENDS OF PRESTRESSING STRANDS SHALL BE RECESSED 3/4" AND PATCHED WITH AN APPROVED GROUT.
7. ALL EXPOSED CORNERS SHALL BE CHAMFERED 3/4".
8. THE TOP OF BEAMS SHALL RECEIVE A SMOOTH FLOAT FINISH, U.N.O.
9. SHEAR KEY SURFACES SHALL BE SAND BLASTED CLEAN.
10. BEAMS SHALL BE HANDLED AND ERECTED USING THE LIFTING LOOPS ONLY. THE PINS OF THE SHACKLES SHALL BE PLACED THOUGH THE LIFTING LOOPS. SEE DETAIL, SHEET 'F3'. BEAMS SHALL BE STORED AND TRANSPORTED WITH TIMBER SUPPORTS WITHIN 2'-0" OF THE BEAM ENDS, UNLESS APPROVED BY J.P. CARRARA & SONS, INC.
11. MATERIAL SPECIFICATION AND MIX DESIGN SHALL CONFORM TO VERMONT SPEC. P.540.05 (2)
    DESIGN MIX : J.P.C. BRIDGE MIX #425M (NO DO)
12. QUALITY CONTROL PROCEDURES ARE IN ACCORDANCE WITH PCI REQUIREMENTS. J.P. CARRARA & SONS, INC. IS A PCI CERTIFIED PLANT.
13. CURING METHOD: AS SOON AS THE TOP OF BEAM IS FINISHED, A COVER OF POLY AND A LAYER OF HOMOSOTE (OR BLUE BOARD) WILL BE PLACED OVER THE BEAM. THE DESIRED CURING TEMPERATURE RANGE SHALL NOT DROP BELOW 70°F. THE TEMPERATURE SHALL BE RECORDED BY AUTOMATIC SENSOR INSTRUMENTS ON GRAPH CHARTS, SPACED NOT MORE THAN 100' APART AND WILL CONTINUE UNTIL RELEASE STRENGTH IS ACHIEVED, (NATURAL CURE WITH NO EXTERNAL HEAT APPLIED). EACH CHART SHALL BE MARKED.
14. TRANSVERSE POST-TENSTIONING SEQUENCE:
    A. ERECT BOX BEAMS, AND POST-TENSION TENDONS TO APPROXIMATELY 5,000 LBS.
    B. GROUT SHEAR KEYS.
    C. ONCE SHEAR KEY GROUT HAS ATTAINED A MINIMUM COMPRESSIVE STRENGTH OF 1,500 PSI; POST-TENSION TENDONS TO 44,000 LBS. FOR EACH 0.60"ø STRAND.

EXAMPLE PRESTRESSING STRAND ELONGATION CALC. AND TENSIONING

(NOT TO BE USED FOR CONSTRUCTION)

SIZE & GRADE: 0.60" DIA. x 270 KSI
AREA: 0.217 IN^2
TENSION: 44,000 LB. EACH STRANDS
GRIP-TO-GRIP: 192'-9 3/4" = 192.813'
Es = 28,600,000 PSI (ASSUMED FOR THESE CALCULATIONS; VALUE TO BE OBTAINED FOR STRAND SPOOL ACTUALLY USED)

EXAMPLE:

$$\Delta = \frac{PL}{AE} = \frac{(44{,}000 - 3{,}000) \times 192.813 \times 12}{0.217 \times 28{,}600{,}000} = 15.29"$$

THEREFORE: (TOLERANCES € 5%)

Δ UPPER LIMIT = 1.05 x 15.29" = 16.05" = 16 1/16"
Δ LOWER LIMIT = 0.95 x 15.29" = 14.53" = 14 1/2"

EXTRA FORCE REQUIRED TO COMPENSATE FOR 1/2" CHUCK SLIPPAGE:

$$\Delta P = \frac{0.5 \times 41{,}000}{15.29} = 1{,}340 \text{ LBS.}$$

TOTAL TENSIONING FORCE = 44,000 + 1,340 = 45,340 LBS.

STRAND TENSIONING PROCEDURE:

1. PULL EACH STRAND INITIALLY TO 3,000* LBS. AND MARK STRAND.
2. THEN PULL EACH STRAND TO A TOTAL TENSION OF 45,340* LBS. AND MEASURE ELONGATION AFTER SEATING. IT MUST BE BETWEEN 14 1/2" & 16 1/16".

* NOTE: FORCES READ ON STRESSING JACK GAUGES MUST BE MADE TO CORRESPOND TO ABOVE VALUES BASED ON CALIBRATION DATA FOR SPECIFIC JACK USED.

1 4-7-14 REVISED AS NOTED
2 5-6-14 REVISED AS NOTED

APPROVAL STAMP:

J.P. CARRARA & SONS INC.
Precast & Prestress Manufacturer N.T.S.
2464 CASE STR., MIDDLEBURY, VERMONT 05753 Phone:(802)388-6361 Fax:(802)388-9010

STATE OF VERMONT AGENCY OF TRANSPORTATION
COUNTY OF WINDHAM

TOWN OF GUILFORD
ROUTE NO. T.H.10, CLASS III (LOCAL ROAD)
BRIDGE NO.: 65 PROJECT NO.: BRO 1442 (36)

SUPERSTRUCTURE PLANS

DATE: MAR. 04, 2014
SCALE: NOTED
CHKD: JJJ/KLT DFTM:AAT/RWS
JOB NO: 23420-014
DWG. NO: F1

Eriksson technologies
813.989.3317
TAMPA, FL LRFD.COM

© 2014 ERIKSSON TECHNOLOGIES, INC. ALL RIGHTS RESERVED

S:\Engineering Services\Carrara\14001 - Guilford Bridge 65\Production Drawings\AutoCAD Files\144236-F1.dwg, 5/6/2014 4:44:15 PM, DWG To PDF.pc3

ABUTMENT & WING WALL GENERAL NOTES

1. MIN. CONCRETE STRENGTH AT 28 DAYS SHALL BE 5,000 PSI.
2. MIN. CONCRETE STRENGTH AT STRESS TRANSFER SHALL BE 3,500 PSI.
3. REINFORCING STEEL SHALL BE GR-60, ASTM A-615 (AASHTO M31).
4. THE TOP OF ABUTMENTS SHALL RECEIVE A SMOOTH FLOAT FINISH. (1)
5. All EDGES OF ABUTMENT SHALL RECEIVE A 1" CHAMFER (U.N.O.)
6. THE TOP OF WING WALLS SHALL RECEIVE A SMOOTH FLOAT FINISH (UNLESS NOTED OTHERWISE).
7. SHEAR KEY SURFACES SHALL BE BLASTED CLEAN.
8. PRECAST CONCRETE UNITS SHALL BE HANDLED AND ERECTED USING THE LIFTING INSERTS ONLY. THE MINIMUM SLING ANGLE FROM THE HORIZONTAL SHALL BE 60°. NON-PRESTRESSED UNITS SHALL BE STORED & TRANSPORTED WITH TIMBER SUPPORTS AT 5th POINTS, UNLESS APPROVED BY J.P. CARRARA & SONS, INC.
9. MATERIAL SPECIFICATION AND MIX DESIGN SHALL CONFORM TO VERMONT SPEC. P540.05.

   DESIGN MIX: (2)

   WING WALLS: J.P.C. BRIDGE MIX #445M5CC

   ABUTMENTS: J.P.C. BRIDGE MIX #445M5CC
10. QUALITY CONTROL PROCEDURES ARE IN ACCORDANCE WITH PCI REQUIREMENTS. J.P. CARRARA & SONS, INC. IS A PCI CERTIFIED PLANT.
11. CURING METHOD: AS SOON AS THE TOP OF PRECAST CONCRETE UNITS ARE FINISHED, A COVER OF RIGID INSULATION AND POLY WILL BE PLACED OVER THE UNIT. NATURAL CURE WITH NO EXTERNAL HEAT APPLIED.
12. ABUTMENT POST-TENSIONING SEQUENCE:
    A. ERECT PRECAST CONCRETE ABUTMENTS, AND POST-TENSION CENTER TENDON TO APPROXIMATELY 3,000 LBS.
    B. GROUT SHEAR KEY.
    C. ONCE SHEAR KEY GROUT HAS ATTAINED A MINIMUM COMPRESSIVE STRENGTH OF 1,500 PSI; POST-TENSION TENDONS TO 32,000 LBS. (2)

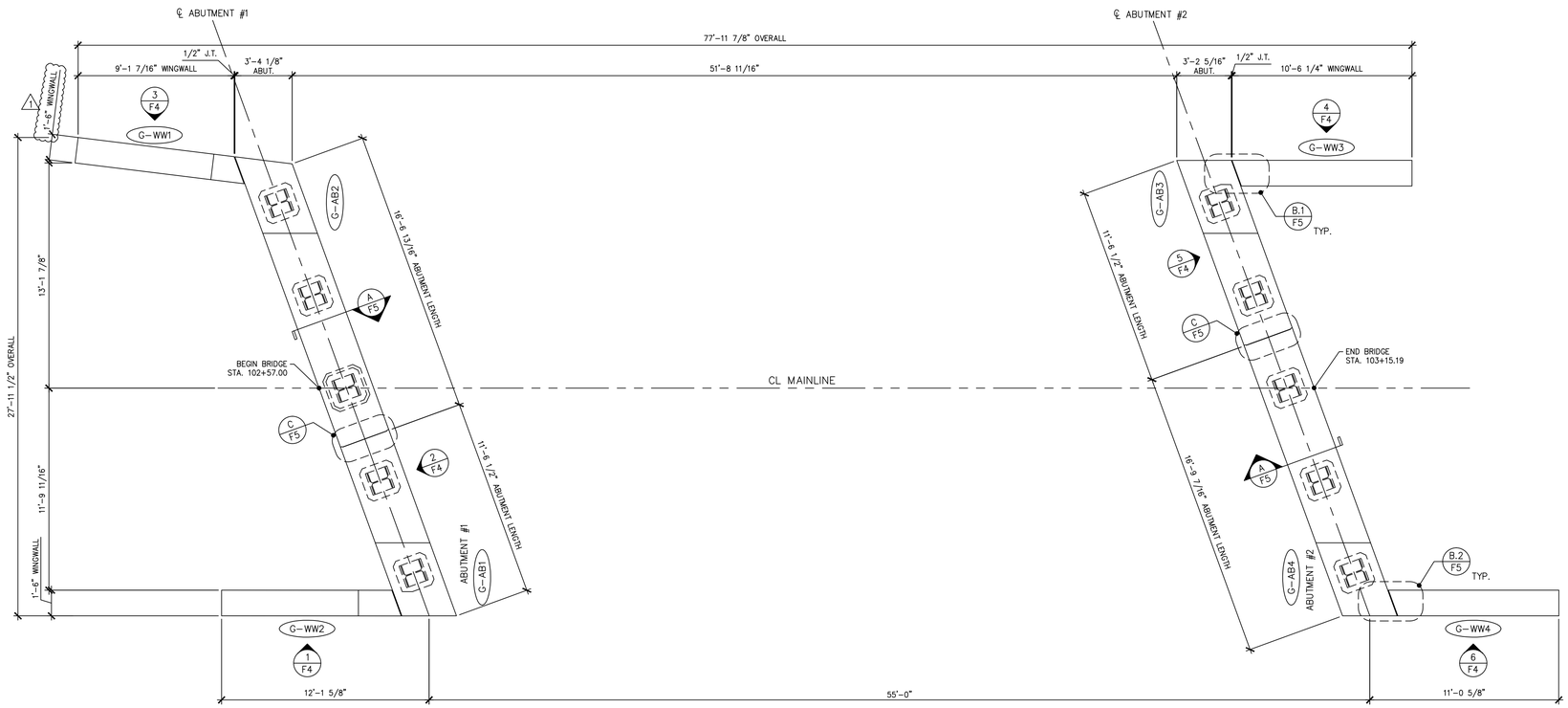

1 / F2 PRECAST CONCRETE ABUTMENT & WING WALL LAYOUT

1/4" = 1'-0"

(1) 4-7-14 REVISED AS NOTED

(2) 5-6-14 REVISED AS NOTED

APPROVAL STAMP:

J.P. CARRARA & SONS INC.

Precast & Prestress Manufacturer N.T.S.

2464 CASE STR., MIDDLEBURY, VERMONT 05753 Phone:(802)388-6361 Fax:(802)388-9010

STATE OF VERMONT AGENCY OF TRANSPORTATION
COUNTY OF WINDHAM

TOWN OF GUILFORD
ROUTE NO. T.H.10, CLASS III (LOCAL ROAD)
BRIDGE NO.: 65 PROJECT NO.: BRO 1442 (36)

SUBSTRUCTURE PLANS

DATE:	MAR. 04, 2014
SCALE:	NOTED
CHKD: JJ/KLT	DFTM:AAT/RWS
JOB NO:	23420-014
DWG. NO:	F2

Eriksson technologies
813.989.3317
TAMPA, FL LRFD.COM

© 2014 ERIKSSON TECHNOLOGIES, INC. ALL RIGHTS RESERVED

S:\Engineering Services\Carrara\14001 - Guilford Bridge 65\Production Drawings\AutoCAD Files\144236-F1.dwg, 5/6/2014 4:44:16 PM, DWG To PDF.pc3

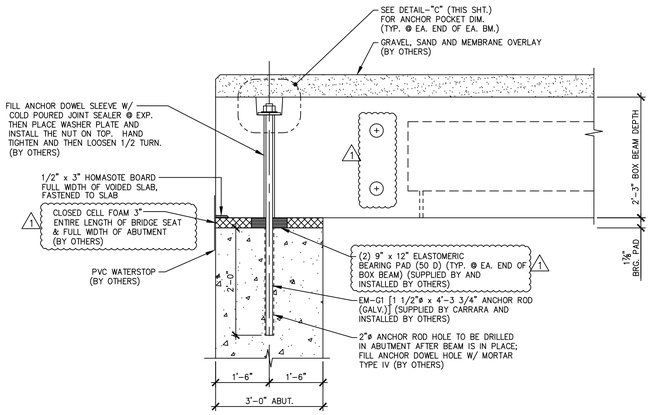

A / F2 BEARING SECTION (EXP. END) 3/4" = 1'-0"

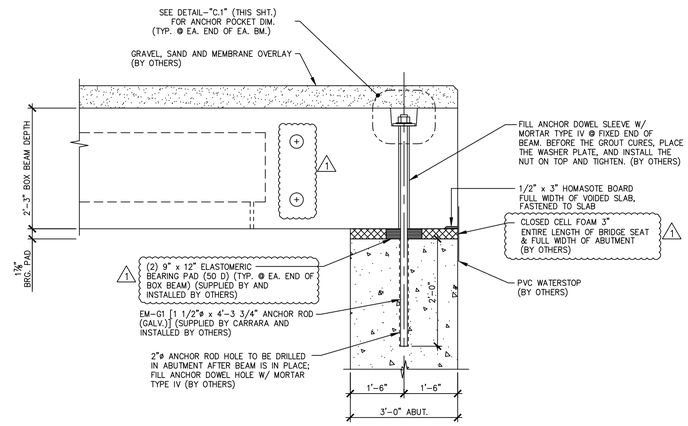

A.1 / F2 BEARING SECTION (FIXED END) 3/4" = 1'-0"

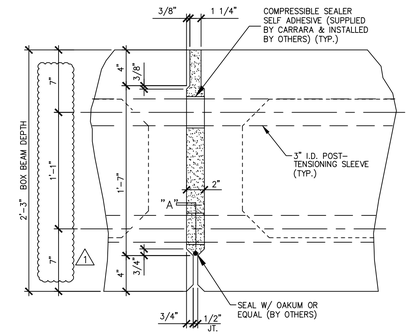

B / F2 SHEAR KEY SECTION @ P.T. SLEEVE 1 1/2" = 1'-0"

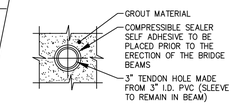

SECTION – "A" 1 1/2" = 1'-0"

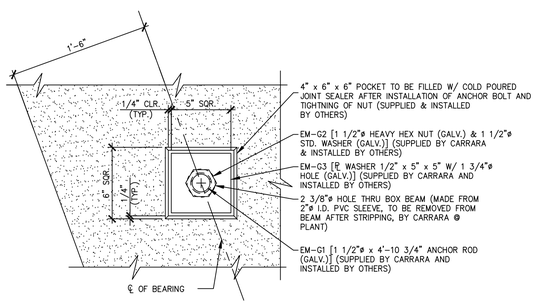

PLAN @ BEAM ℄

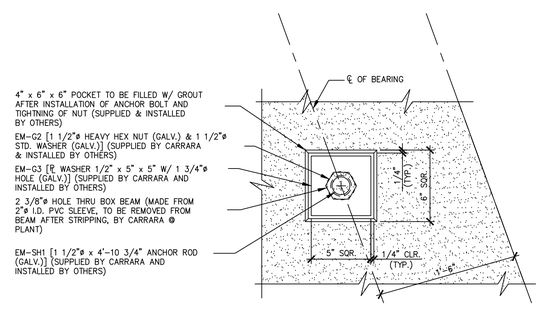

PLAN @ BEAM ℄

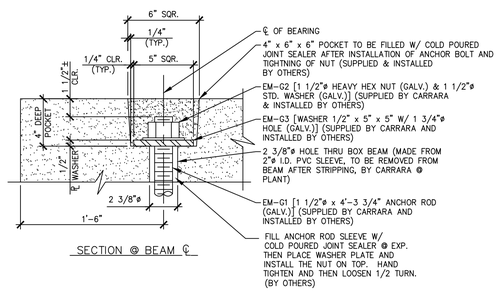

SECTION @ BEAM ℄

DETAIL – "C" 2" = 1'-0"

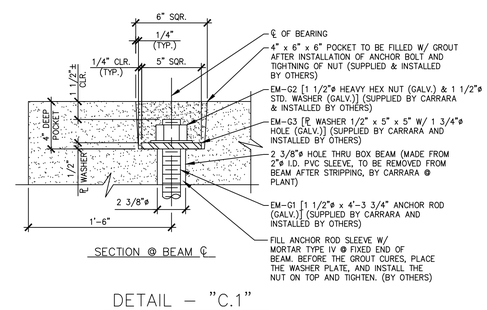

SECTION @ BEAM ℄

DETAIL – "C.1" 2" = 1'-0"

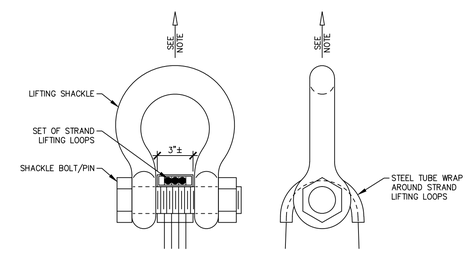

NOTE : BEAM SHALL BE HANDLED AND ERECTED USING THE LIFTING LOOPS ONLY. RIGGING SHALL BE CONFIGURED SUCH THAT EQUAL FORCES ARE APPLIED TO EACH SET OF LIFTING LOOPS AT EACH END OF THE BEAM. SHACKLE BOLT/PIN SHALL BE PLACED UNDER LIFT LOOPS AS SHOWN. DESIGN AND CONFIGURATION OF RIGGING BY PURCHASER.

LIFTING SHACKLE DETAILS

1 NOTE :DUNNAGE SHALL BE PLACED UNDER BEAMS AT LOCATION OF LIFT LOOPS FOR STORAGE & SHIPPING.

1 4-7-14 REVISED AS NOTED

APPROVAL STAMP:

J.P. CARRARA & SONS INC.
Precast & Prestress Manufacturer N.T.S.
2464 CASE STR., MIDDLEBURY, VERMONT 05753 Phone:(802)388-6361 Fax:(802)388-9010

STATE OF VERMONT AGENCY OF TRANSPORTATION
COUNTY OF WINDHAM

TOWN OF GUILFORD
ROUTE NO. T.H.10, CLASS III (LOCAL ROAD)
BRIDGE NO.: 65 PROJECT NO.: BRO 1442 (36)

SUPERSTRUCTURE PLANS

DATE: MAR. 04, 2014
SCALE: NOTED
CHKD: JJJ/KLT DFTM:AAT/RWS
JOB NO: 23420-014
DWG. NO: F3

Eriksson technologies
813.989.3317
TAMPA, FL LRFD.COM
© 2014 ERIKSSON TECHNOLOGIES, INC. ALL RIGHTS RESERVED

S:\Engineering Services\Carrara\14001 - Guilford Bridge 65\Production Drawings\AutoCAD Files\144236-F1.dwg, 5/6/2014 4:44:16 PM, DWG To PDF.pc3

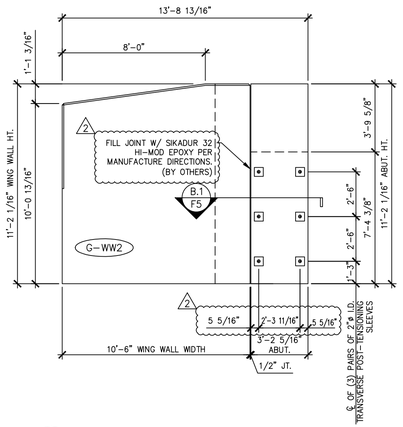

1 F4 WING WALL #2 – SOUTH ELEVATION 1/4" = 1'-0"

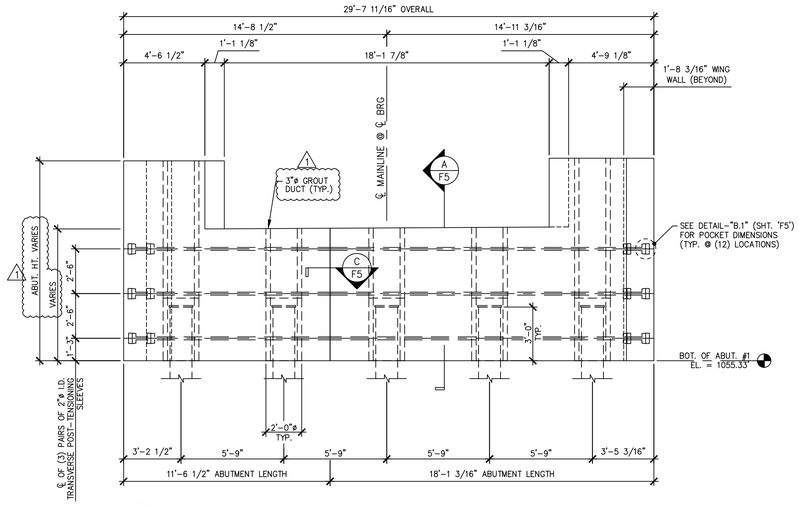

2 F4 ABUTMENT #1 – EAST ELEVATION 1/4" = 1'-0"

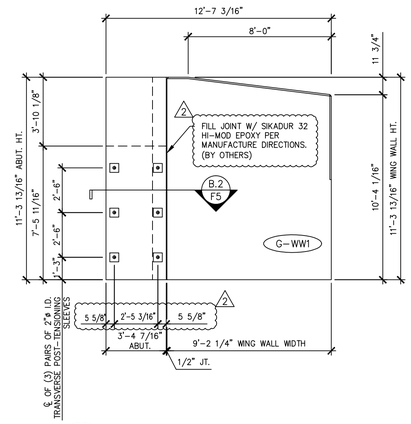

3 F4 WING WALL #1 – NORTH ELEVATION 1/4" = 1'-0"

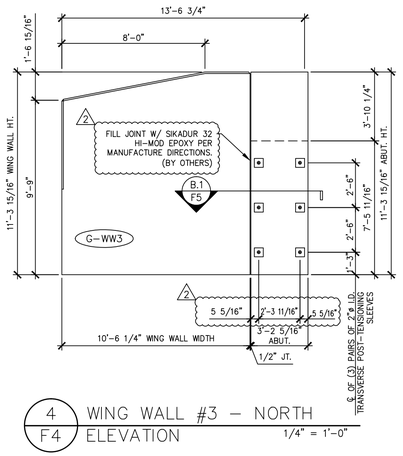

4 F4 WING WALL #3 – NORTH ELEVATION 1/4" = 1'-0"

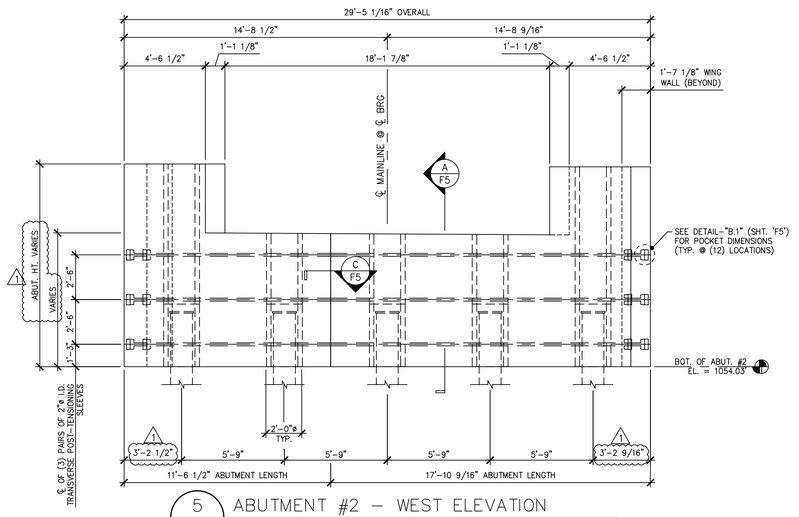

5 F4 ABUTMENT #2 – WEST ELEVATION 1/4" = 1'-0"

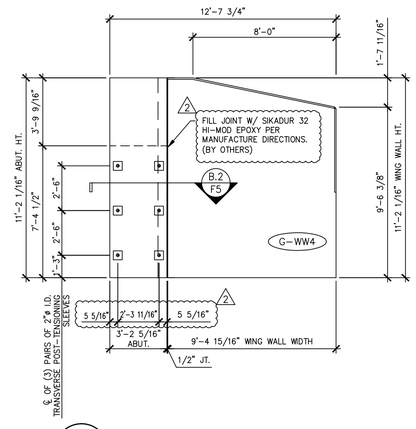

6 F4 WING WALL #4 – SOUTH ELEVATION 1/4" = 1'-0"

1 4-7-14 REVISED AS NOTED
2 5-6-14 REVISED AS NOTED

APPROVAL STAMP:

J.P. CARRARA & SONS INC.
Precast & Prestress Manufacturer N.T.S.
2464 CASE STR., MIDDLEBURY, VERMONT 05753 Phone:(802)388-6361 Fax:(802)388-9010

STATE OF VERMONT AGENCY OF TRANSPORTATION
COUNTY OF WINDHAM

TOWN OF GUILFORD
ROUTE NO. T.H.10, CLASS III (LOCAL ROAD)
BRIDGE NO.: 65 PROJECT NO.: BRO 1442 (36)

ABUTMENT ELEVATIONS

DATE: MAR. 04, 2014
SCALE: NOTED
CHKD: JJ/KLT DFTM:AAT/RWS
JOB NO: 23420-014
DWG. NO: F4

Eriksson technologies
813.989.3317
TAMPA, FL LRFD.COM
© 2014 ERIKSSON TECHNOLOGIES, INC. ALL RIGHTS RESERVED

S:\Engineering Services\Carrara\14001 - Guilford Bridge 65\Production Drawings\AutoCAD Files\144236-F1.dwg, 5/6/2014 4:44:17 PM, DWG To PDF.pc3

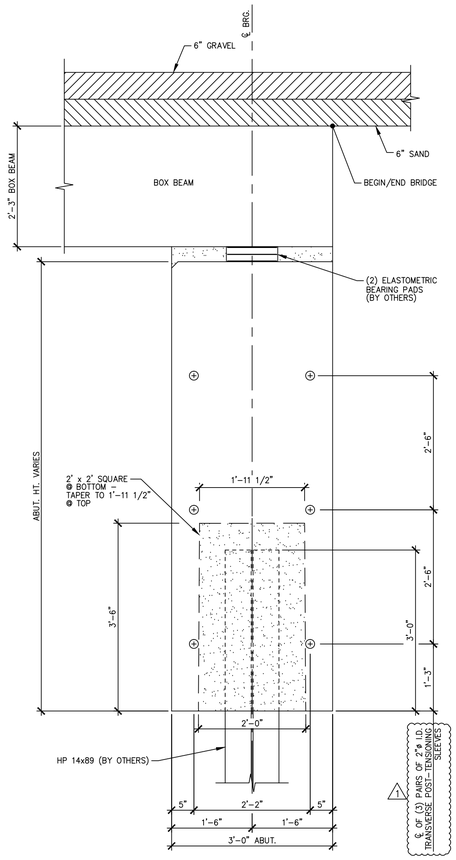

A F5 BEARING SECTION
NEXT BEAM STEM BEARING 3/4" = 1'-0"

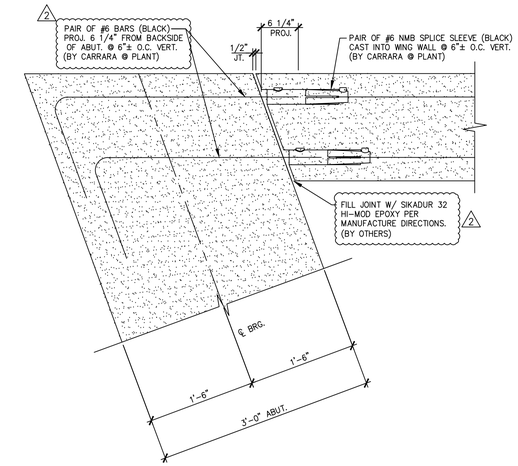

B.1 F5 WING WALL CONNECTION DETAIL
1" = 1'-0"

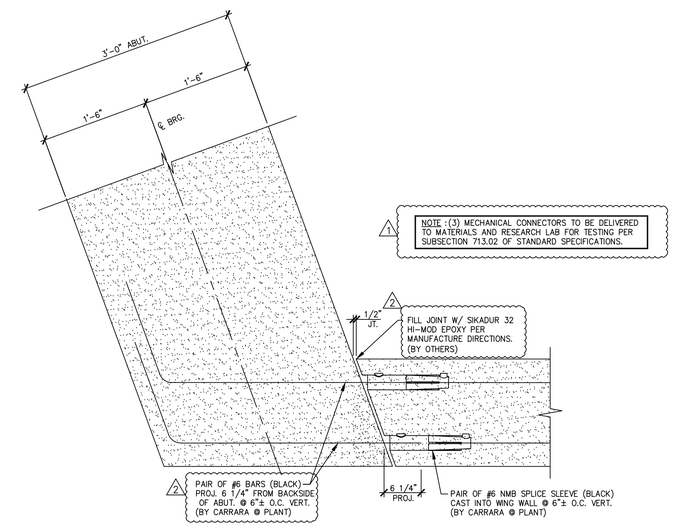

B.2 F5 WING WALL CONNECTION DETAIL
1" = 1'-0"

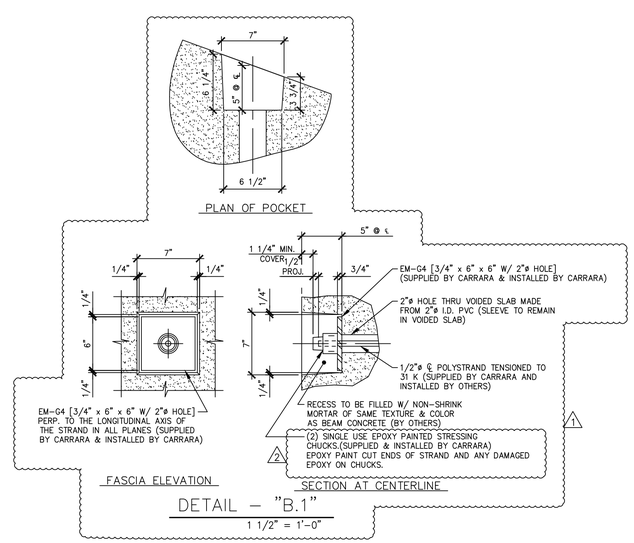

DETAIL – "B.1"
1 1/2" = 1'-0"

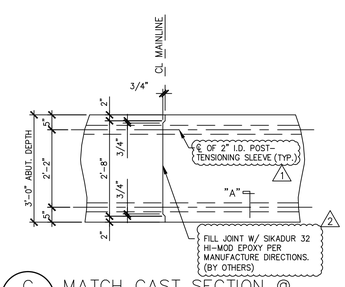

C F5 MATCH CAST SECTION @ P.T. SLEEVE
1/2" = 1'-0"

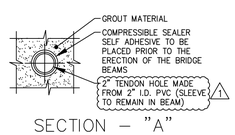

SECTION – "A"
1 1/2" = 1'-0"

1 4-7-14 REVISED AS NOTED
2 5-6-14 REVISED AS NOTED

APPROVAL STAMP:

Eriksson technologies
813.989.3317
TAMPA, FL LRFD.COM

© 2014 ERIKSSON TECHNOLOGIES, INC. ALL RIGHTS RESERVED

J.P. CARRARA & SONS INC.
Precast & Prestress Manufacturer N.T.S.
2464 CASE STR., MIDDLEBURY, VERMONT 05753 Phone:(802)388-6361 Fax:(802)388-9010

STATE OF VERMONT AGENCY OF TRANSPORTATION
COUNTY OF WINDHAM

TOWN OF GUILFORD
ROUTE NO. T.H.10, CLASS III (LOCAL ROAD)
BRIDGE NO.: 65 PROJECT NO.: BRO 1442 (36)

ABUTMENT DETAILS

DATE:	MAR. 04, 2014
SCALE:	NOTED
CHKD: JJJ/KLT	DFTM:AAT/RWS
JOB NO:	23420-014
DWG. NO:	F5

S:\Engineering Services\Carrara\14001 - Guilford Bridge 65\Production Drawings\AutoCAD Files\144236-F1.dwg, 5/6/2014 4:44:17 PM, DWG To PDF.pc3

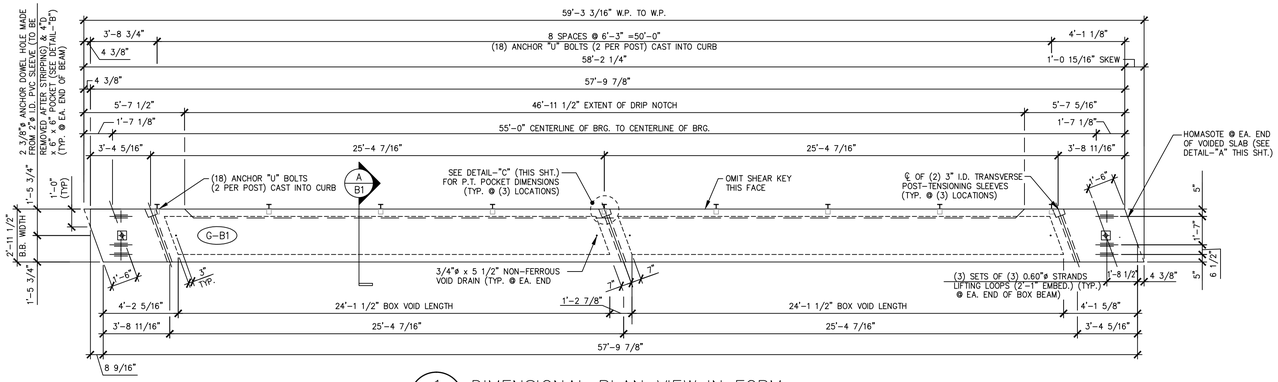

1 / B1 DIMENSIONAL PLAN VIEW IN FORM

1/4" = 1'-0"

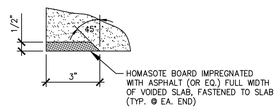

DETAIL – "A"

3" = 1'-0"

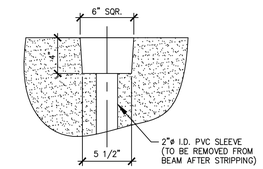

DETAIL – "B"

1 1/2" = 1'-0"

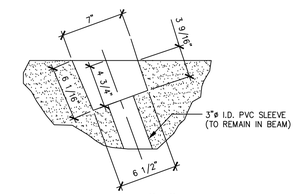

DETAIL – "C"

1 1/2" = 1'-0"

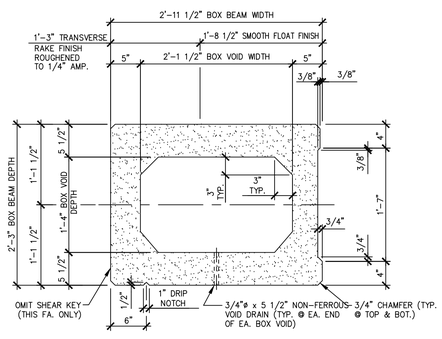

A / B1 DIMENSIONAL SECTION

1" = 1'-0"

SHOP NOTE:
SEE SHEET "B1A" FOR REINFORCING DETAILS.

MARK: G-B1	QTY.: 1	WT.: 26.71 T	VOL.: 13.19 cy

MATERIAL LIST / BEAM

ITEM	MARK	DESCRIPTION	QTY./BEAM G-B1	
1				
2				
3				
4				
5				
6				
7		3/4"ø x 5 1/2" NON-FERROUS VOID DRAIN	4	
8		2'-2" x 1'-4 1/2" x 24'-1 1/2" BOX VOID	2	
9		SET OF (3) 0.60"ø STRAND LIFTING LOOPS	6	
10				

APPROVAL STAMP:

J.P. CARRARA & SONS INC.
Precast & Prestress Manufacturer N.T.S.
2464 CASE STR., MIDDLEBURY, VERMONT 05753 Phone:(802)388-6361 Fax:(802)388-9010

STATE OF VERMONT AGENCY OF TRANSPORTATION
COUNTY OF WINDHAM

TOWN OF GUILFORD
ROUTE NO. T.H.10, CLASS III (LOCAL ROAD)
BRIDGE NO.: 65 PROJECT NO.: BRO 1442 (36)

PRESTRESSED BOX BEAM
DIMENSIONAL DETAILS

DATE: MAR. 04, 2014
SCALE: NOTED
CHKD: JJJ/KLT DFTM:AAT/RWS
JOB NO: 23420-014
DWG. NO: B1

Eriksson technologies
813.989.3317
TAMPA, FL LRFD.COM
© 2014 ERIKSSON TECHNOLOGIES, INC. ALL RIGHTS RESERVED

S:\Engineering Services\Carrara\14001 - Guilford Bridge 65\Production Drawings\AutoCAD Files\14236-B1.dwg, 5/6/2014 4:44:20 PM, DWG To PDF.pc3

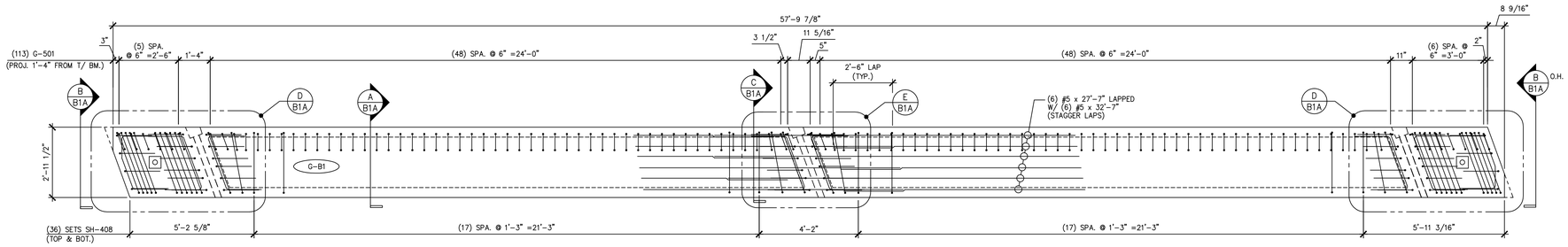

1 / B1A REINFORCING PLAN VIEW IN FORM

3/8" = 1'-0"

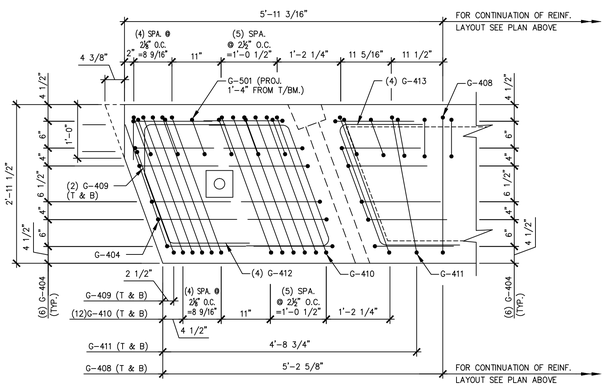

D / B1A END BLOCK REINFORCING PLAN

3/4" = 1'-0"

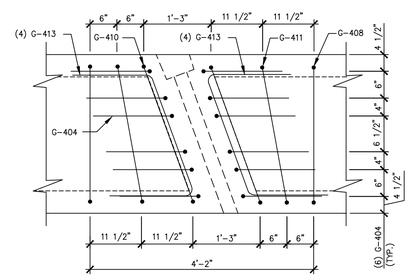

E / B1A P.T. DIAPHRAGM REINFORCING PLAN

3/4" = 1'-0"

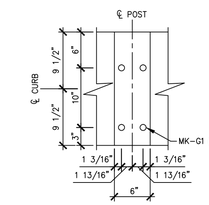

F / B1A VIEW F

1" = 1'-0"

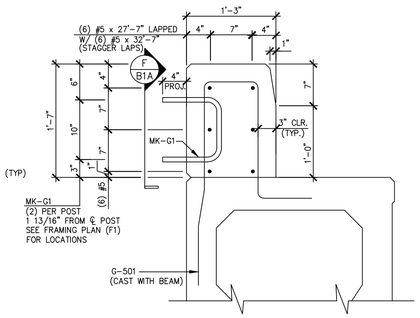

SECONDARY POUR DETAIL

1" = 1'-0"

MARK: G-B1	QTY.: 1	
MATERIAL LIST / BEAM		
ITEM	MARK	DESCRIPTION	QTY.
1	G-404	#4 BENT BAR (LEVEL II - DUAL COATED)	48
2	G-408	#4 BENT BAR (LEVEL II - DUAL COATED)	72
3	G-409	#4 BENT BAR (LEVEL II - DUAL COATED)	4
4	G-410	#4 BENT BAR (LEVEL II - DUAL COATED)	52
5	G-411	#4 BENT BAR (LEVEL II - DUAL COATED)	8
6	G-412	#4 BENT BAR (LEVEL II - DUAL COATED)	8
7	G-413	#4 BENT BAR (LEVEL II - DUAL COATED)	24
8	G-501	#5 BENT BAR (LEVEL II - DUAL COATED)	113
9			
10			
11			
12			
13			
14			
15			
16		#5 x 27'-7" (LEVEL II - DUAL COATED)	12
17		#5 x 32'-7" (LEVEL II - DUAL COATED)	12
18			
19			
20			
21			
22	MK-G1	1"ø ANCHOR "U" BOLTS (SUPPLIED BY OTHERS)	18
23			
24			
25			

1 3 5 7 9 11 13 14 12 10 8 6 4 2

DETENSIONING SCHEDULE

N.T.S.

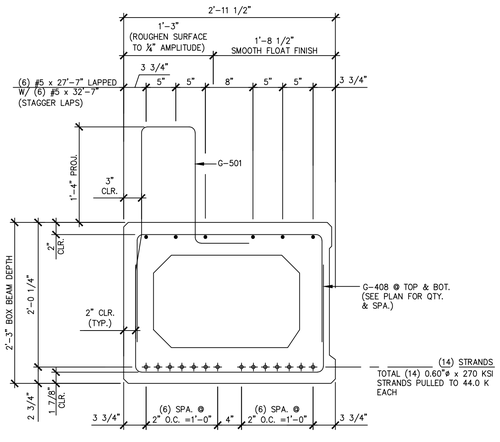

A / B1A REINFORCING SECTION

1" = 1'-0"

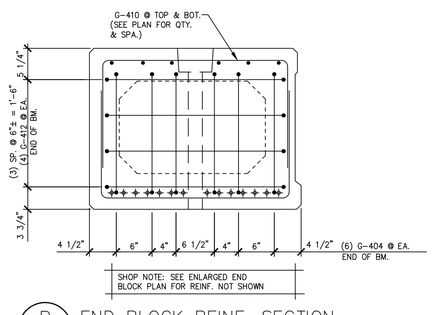

B / B1A END BLOCK REINF. SECTION

1" = 1'-0"

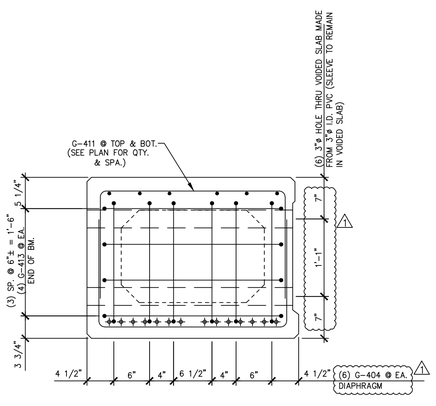

C / B1A P.T. DIAPHRAGM REINF. SECTION

1" = 1'-0"

△1 4-7-14 REVISED AS NOTED

APPROVAL STAMP:

J.P. CARRARA & SONS INC.
Precast & Prestress Manufacturer N.T.S.
2464 CASE STR., MIDDLEBURY, VERMONT 05753 Phone:(802)388-6361 Fax:(802)388-9010

STATE OF VERMONT AGENCY OF TRANSPORTATION
COUNTY OF WINDHAM

TOWN OF GUILFORD
ROUTE NO. T.H.10, CLASS III (LOCAL ROAD)
BRIDGE NO.: 65 PROJECT NO.: BRO 1442 (36)

PRESTRESSED BOX BEAM
REINFORCING DETAILS

DATE: MAR. 04, 2014
SCALE: NOTED
CHKD: JJJ/KLT DFTM:AAT/RWS
JOB NO: 23420-014
DWG. NO: B1A

Eriksson technologies
813.989.3317
TAMPA, FL LRFD.COM
© 2014 ERIKSSON TECHNOLOGIES, INC. ALL RIGHTS RESERVED

S:\Engineering Services\Carrara\14001 - Guilford Bridge 65\Production Drawings\AutoCAD Files\144236-B1a(NEW).dwg, 5/6/2014 4:44:22 PM, DWG To PDF.pc3

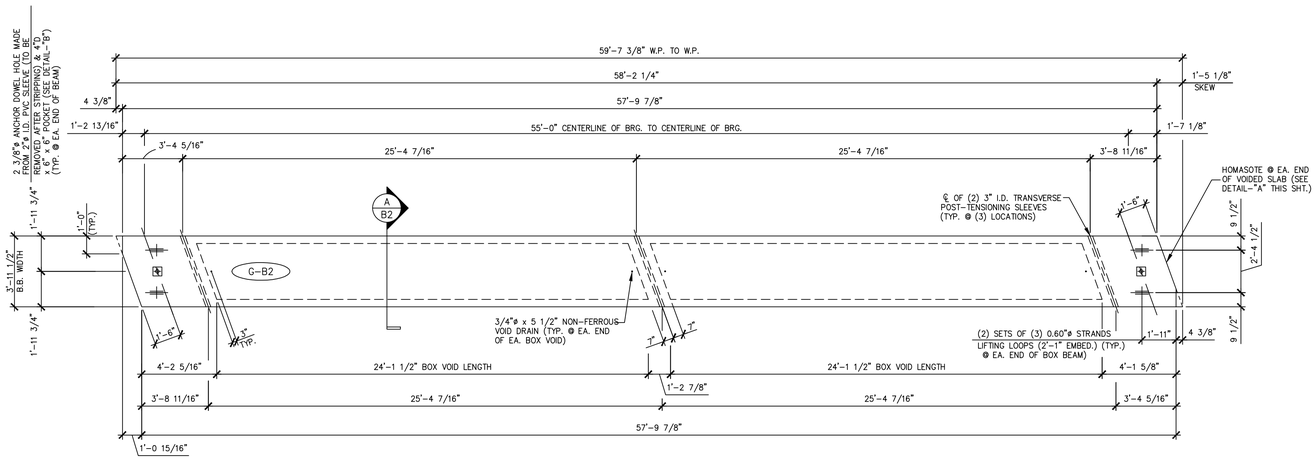

1 / B2 DIMENSIONAL PLAN VIEW IN FORM

1/4" = 1'-0"

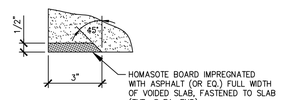

DETAIL – "A"

3" = 1'-0"

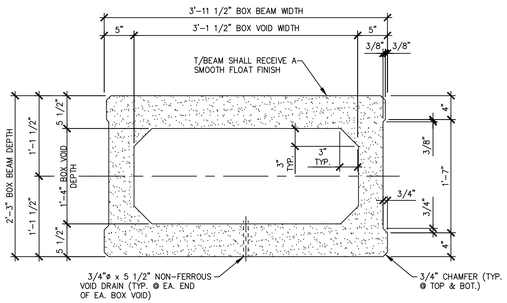

A / B2 DIMENSIONAL SECTION

1" = 1'-0"

SHOP NOTE:
SEE SHEET "B2A" FOR REINFORCING DETAILS.

MARK: G-B2	QTY.: 3	WT.: 23.64 T	VOL.: 11.68 cy

MATERIAL LIST / BEAM

ITEM	MARK	DESCRIPTION	QTY./BEAM SH-B2	
1				
2				
3				
4				
5				
6				
7		3/4"ø x 5 1/2" NON-FERROUS VOID DRAIN	4	
8		2'-2" x 1'-4 1/2" x 24'-1 1/2" BOX VOID	2	
9		SET OF (3) 0.60"ø STRAND LIFTING LOOPS	4	
10				

APPROVAL STAMP:

J.P. CARRARA & SONS INC.
Precast & Prestress Manufacturer N.T.S.
2464 CASE STR., MIDDLEBURY, VERMONT 05753 Phone:(802)388-6361 Fax:(802)388-9010

STATE OF VERMONT AGENCY OF TRANSPORTATION
COUNTY OF WINDHAM

TOWN OF GUILFORD
ROUTE NO. T.H.10, CLASS III (LOCAL ROAD)
BRIDGE NO.: 65 PROJECT NO.: BRO 1442 (36)

PRESTRESSED BOX BEAM
DIMENSIONAL DETAILS

DATE: MAR. 04, 2014
SCALE: NOTED
CHKD: JJ/KLT DFTM:AAT/RWS
JOB NO: 23420-014
DWG. NO: B2

Eriksson technologies
813.989.3317
TAMPA, FL LRFD.COM
© 2014 ERIKSSON TECHNOLOGIES, INC. ALL RIGHTS RESERVED

S:\Engineering Services\Carrara\14001 - Guilford Bridge 65\Production Drawings\AutoCAD Files\144236-B2.dwg, 5/6/2014 4:44:25 PM, DWG To PDF.pc3

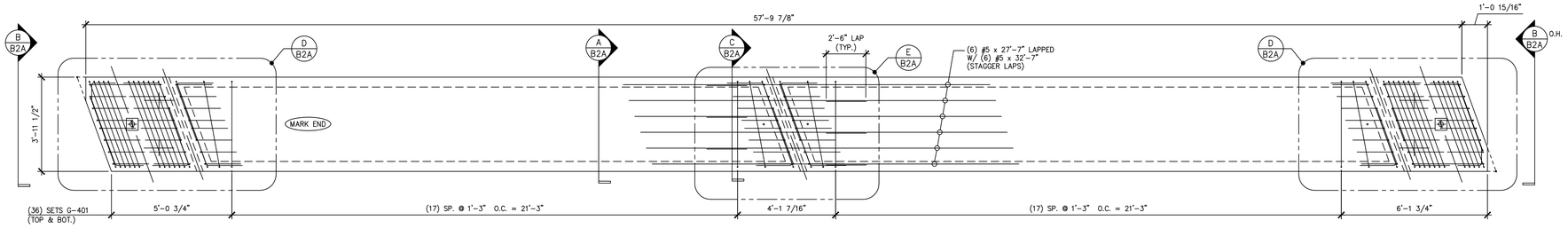

1 / B2 REINFORCING PLAN VIEW IN FORM

1/4" = 1'-0"

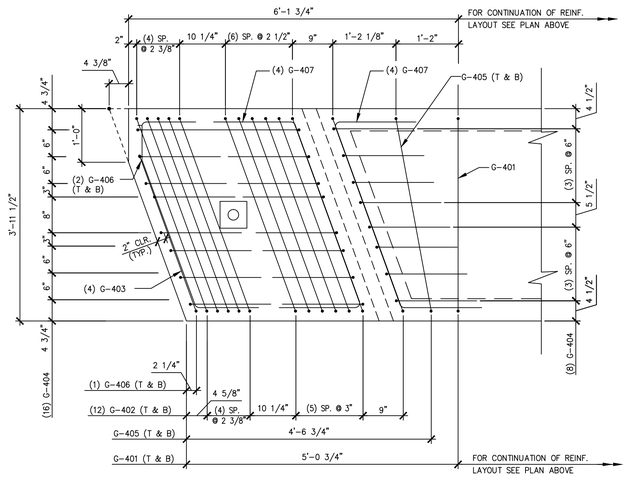

D / B2A END BLOCK REINFORCING PLAN

3/4" = 1'-0"

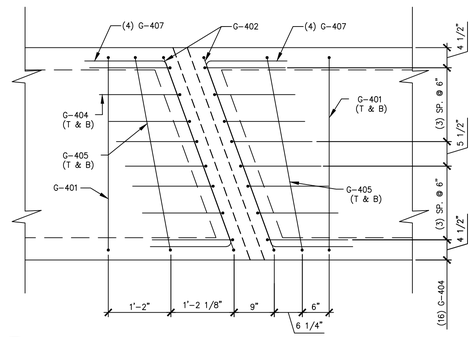

E / B2A P.T. DIAPHRAGM REINFORCING PLAN

3/4" = 1'-0"

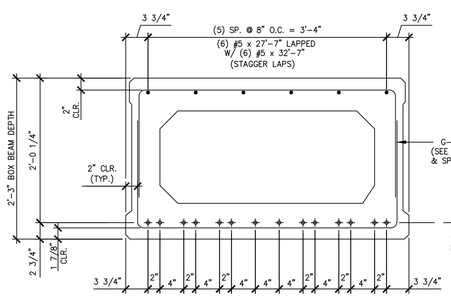

A / B2A REINFORCING SECTION

1" = 1'-0"

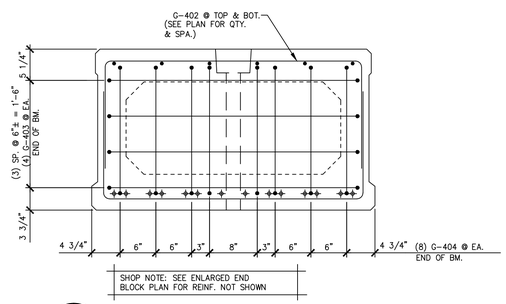

B / B2A END BLOCK REINF. SECTION

1" = 1'-0"

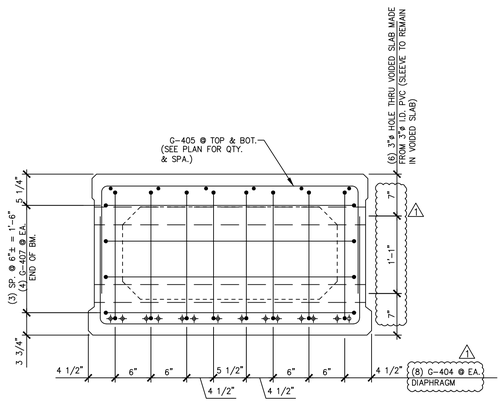

C / B2A P.T. DIAPHRAGM REINF. SECTION

1" = 1'-0"

1 3 5 7 9 11 13 14 12 10 8 6 4 2

DETENSIONING SCHEDULE

N.T.S.

MARK: G-B2	QTY.: 3

MATERIAL LIST / BEAM

ITEM	MARK	DESCRIPTION	QTY.
1	G-401	#4 BENT BAR (LEVEL II – DUAL COATED)	72
2	G-402	#4 BENT BAR (LEVEL II – DUAL COATED)	52
3	G-403	#4 BENT BAR (LEVEL II – DUAL COATED)	8
4	G-404	#4 BENT BAR (LEVEL II – DUAL COATED)	64
5	G-405	#4 BENT BAR (LEVEL II – DUAL COATED)	8
6	G-406	#4 BENT BAR (LEVEL II – DUAL COATED)	4
7	G-407	#4 BENT BAR (LEVEL II – DUAL COATED)	24
8			
9			
10			
11			
12			
13			
14			
15			
16		#5 x 27'-7" (LEVEL II – DUAL COATED)	6
17		#5 x 32'-7" (LEVEL II – DUAL COATED)	6
18			
19			
20			
21			
22			
23			
24			
25			

△1 4-7-14 REVISED AS NOTED

APPROVAL STAMP:

J.P. CARRARA & SONS INC.
Precast & Prestress Manufacturer N.T.S.
2464 CASE STR., MIDDLEBURY, VERMONT 05753 Phone:(802)388-6361 Fax:(802)388-9010

STATE OF VERMONT AGENCY OF TRANSPORTATION
COUNTY OF WINDHAM

TOWN OF GUILFORD
ROUTE NO. T.H.10, CLASS III (LOCAL ROAD)
BRIDGE NO.: 65 PROJECT NO.: BRO 1442 (36)

PRESTRESSED BOX BEAM
REINFORCING DETAILS

DATE: MAR. 04, 2014
SCALE: NOTED
CHKD: JJJ/KLT DFTM:AAT/RWS
JOB NO: 23420-014
DWG. NO: B2A

Eriksson technologies
813.989.3317
TAMPA, FL LRFD.COM
© 2014 ERIKSSON TECHNOLOGIES, INC. ALL RIGHTS RESERVED

S:\Engineering Services\Carrara\14001 - Guilford Bridge 65\Production Drawings\AutoCAD Files\144236-B2a.dwg, 5/6/2014 4:44:28 PM, DWG To PDF.pc3

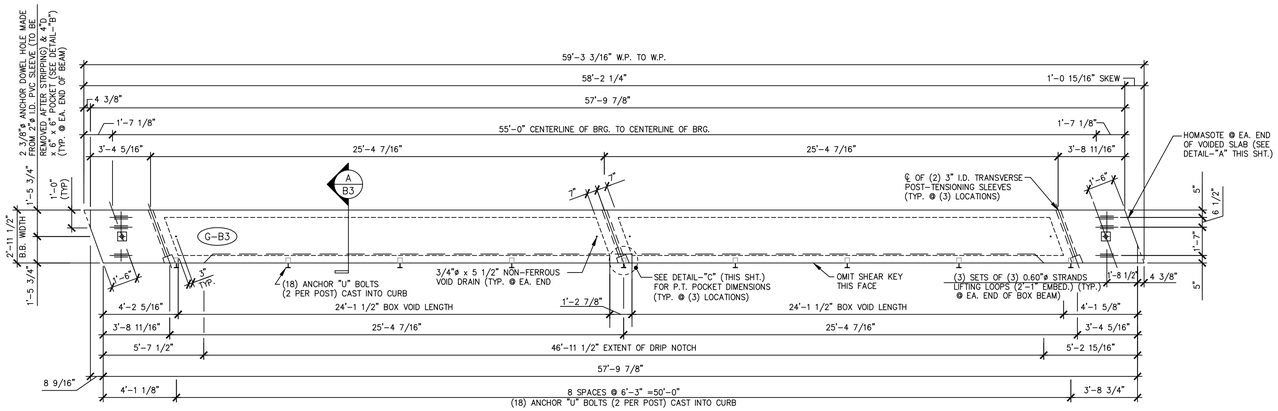

1 / B3 DIMENSIONAL PLAN VIEW IN FORM

1/4" = 1'-0"

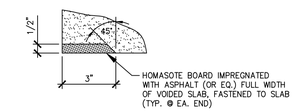

DETAIL – "A"

3" = 1'-0"

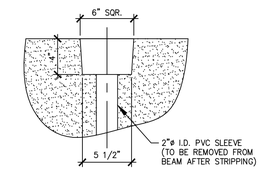

DETAIL – "B"

1 1/2" = 1'-0"

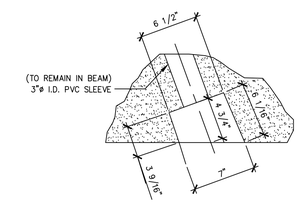

DETAIL – "C"

1 1/2" = 1'-0"

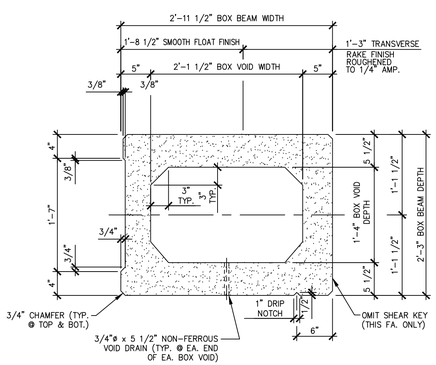

A / B3 DIMENSIONAL SECTION

1" = 1'-0"

SHOP NOTE:
SEE SHEET "B3A" FOR REINFORCING DETAILS.

MARK: G-B3	QTY.: 1	WT.: 26.71 T	VOL.: 13.19 cy

MATERIAL LIST / BEAM

ITEM	MARK	DESCRIPTION	QTY./BEAM G-B1	
1				
2				
3				
4				
5				
6				
7		3/4"ø x 5 1/2" NON-FERROUS VOID DRAIN	4	
8		2'-2" x 1'-4 1/2" x 24'-1 1/2" BOX VOID	2	
9		SET OF (3) 0.60"ø STRAND LIFTING LOOPS	6	
10				

APPROVAL STAMP:

J.P. CARRARA & SONS INC.
Precast & Prestress Manufacturer N.T.S.
2464 CASE STR., MIDDLEBURY, VERMONT 05753 Phone:(802)388-6361 Fax:(802)388-9010

STATE OF VERMONT AGENCY OF TRANSPORTATION
COUNTY OF WINDHAM

TOWN OF GUILFORD
ROUTE NO. T.H.10, CLASS III (LOCAL ROAD)
BRIDGE NO.: 65 PROJECT NO.: BRO 1442 (36)

PRESTRESSED BOX BEAM
DIMENSIONAL DETAILS

DATE: MAR. 04, 2014
SCALE: NOTED
CHKD: JJ/KLT DFTM:AAT/RWS
JOB NO: 23420-014
DWG. NO: B3

Eriksson technologies
813.989.3317
TAMPA, FL LRFD.COM
© 2014 ERIKSSON TECHNOLOGIES, INC. ALL RIGHTS RESERVED

S:\Engineering Services\Carrara\14001 - Guilford Bridge 65\Production Drawings\AutoCAD Files\144236-B3.dwg, 5/6/2014 4:44:31 PM, DWG To PDF.pc3

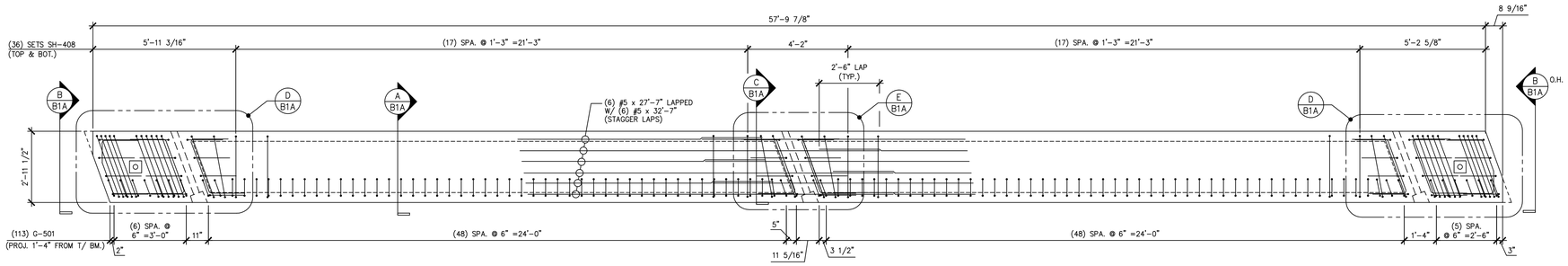

1 B3A REINFORCING PLAN VIEW IN FORM

3/8" = 1'-0"

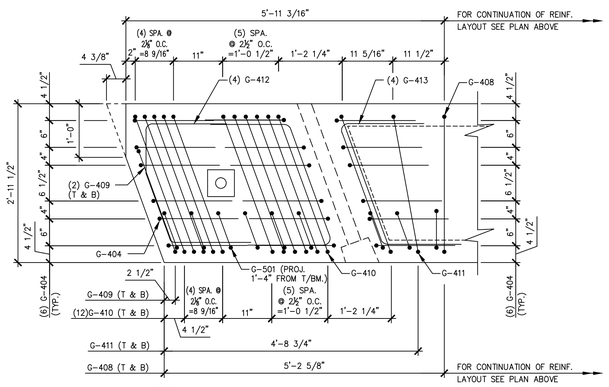

D B3A END BLOCK REINFORCING PLAN

3/4" = 1'-0"

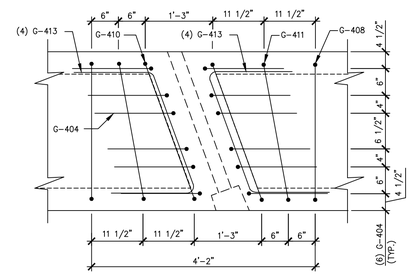

E B3A P.T. DIAPHRAGM REINFORCING PLAN

3/4" = 1'-0"

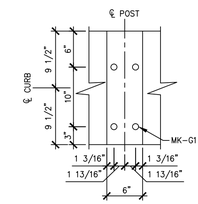

F B1A VIEW F

1" = 1'-0"

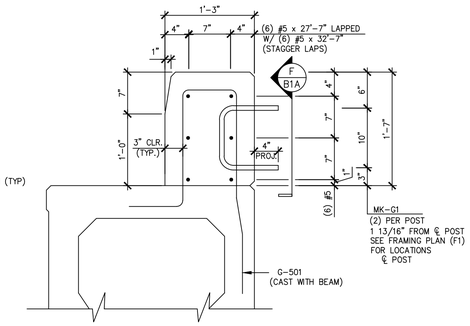

SECONDARY POUR DETAIL

1" = 1'-0"

1 3 5 7 9 11 13 14 12 10 8 6 4 2

DETENSIONING SCHEDULE

N.T.S.

MARK: G-B3 QTY.: 1

MATERIAL LIST / BEAM

ITEM	MARK	DESCRIPTION	QTY.
1	G-404	#4 BENT BAR (LEVEL II DUAL COATED)	48
2	G-408	#4 BENT BAR (LEVEL II DUAL COATED)	72
3	G-409	#4 BENT BAR (LEVEL II DUAL COATED)	4
4	G-410	#4 BENT BAR (LEVEL II DUAL COATED)	52
5	G-411	#4 BENT BAR (LEVEL II DUAL COATED)	8
6	G-412	#4 BENT BAR (LEVEL II DUAL COATED)	8
7	G-413	#4 BENT BAR (LEVEL II DUAL COATED)	24
8	G-501	#5 BENT BAR (LEVEL II DUAL COATED)	113
9			
10			
11			
12			
13			
14			
15			
16		#5 x 27'-7" (LEVEL II DUAL COATED)	12
17		#5 x 32'-7" (LEVEL II DUAL COATED)	12
18			
19			
20			
21			
22	MK-G1	1"ø ANCHOR "U" BOLTS (SUPPLIED BY OTHERS)	18
23			
24			
25			

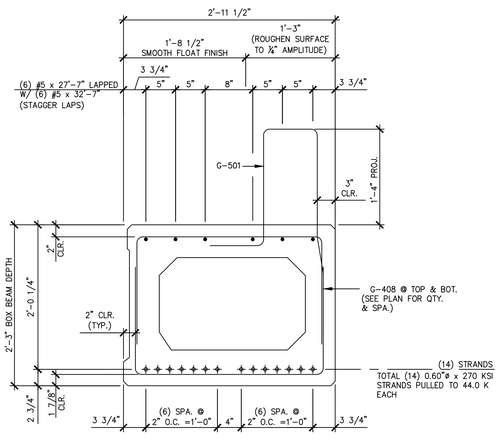

A B3A REINFORCING SECTION

1" = 1'-0"

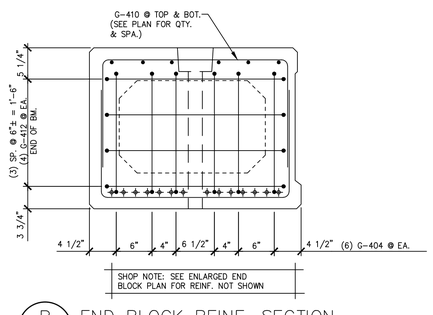

B B3A END BLOCK REINF. SECTION

1" = 1'-0"

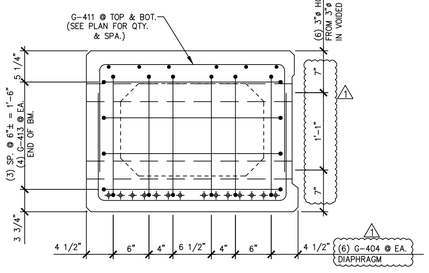

C B3A P.T. DIAPHRAGM REINF. SECTION

1" = 1'-0"

△1 4-7-14 REVISED AS NOTED

APPROVAL STAMP:

J.P. CARRARA & SONS INC.
Precast & Prestress Manufacturer N.T.S.
2464 CASE STR., MIDDLEBURY, VERMONT 05753 Phone:(802)388-6361 Fax:(802)388-9010

STATE OF VERMONT AGENCY OF TRANSPORTATION
COUNTY OF WINDHAM

TOWN OF GUILFORD
ROUTE NO. T.H.10, CLASS III (LOCAL ROAD)
BRIDGE NO.: 65 PROJECT NO.: BRO 1442 (36)

PRESTRESSED BOX BEAM
REINFORCING DETAILS

DATE: MAR. 04, 2014
SCALE: NOTED
CHKD: JJ/KLT DFTM:AAT/RWS
JOB NO: 23420-014
DWG. NO: B3A

Eriksson technologies
813.989.3317
TAMPA, FL LRFD.COM
© 2014 ERIKSSON TECHNOLOGIES, INC. ALL RIGHTS RESERVED

S:\Engineering Services\Carrara\14001 - Guilford Bridge 65\Production Drawings\AutoCAD Files\144236-B3a.dwg, 5/6/2014 4:44:33 PM, DWG To PDF.pc3

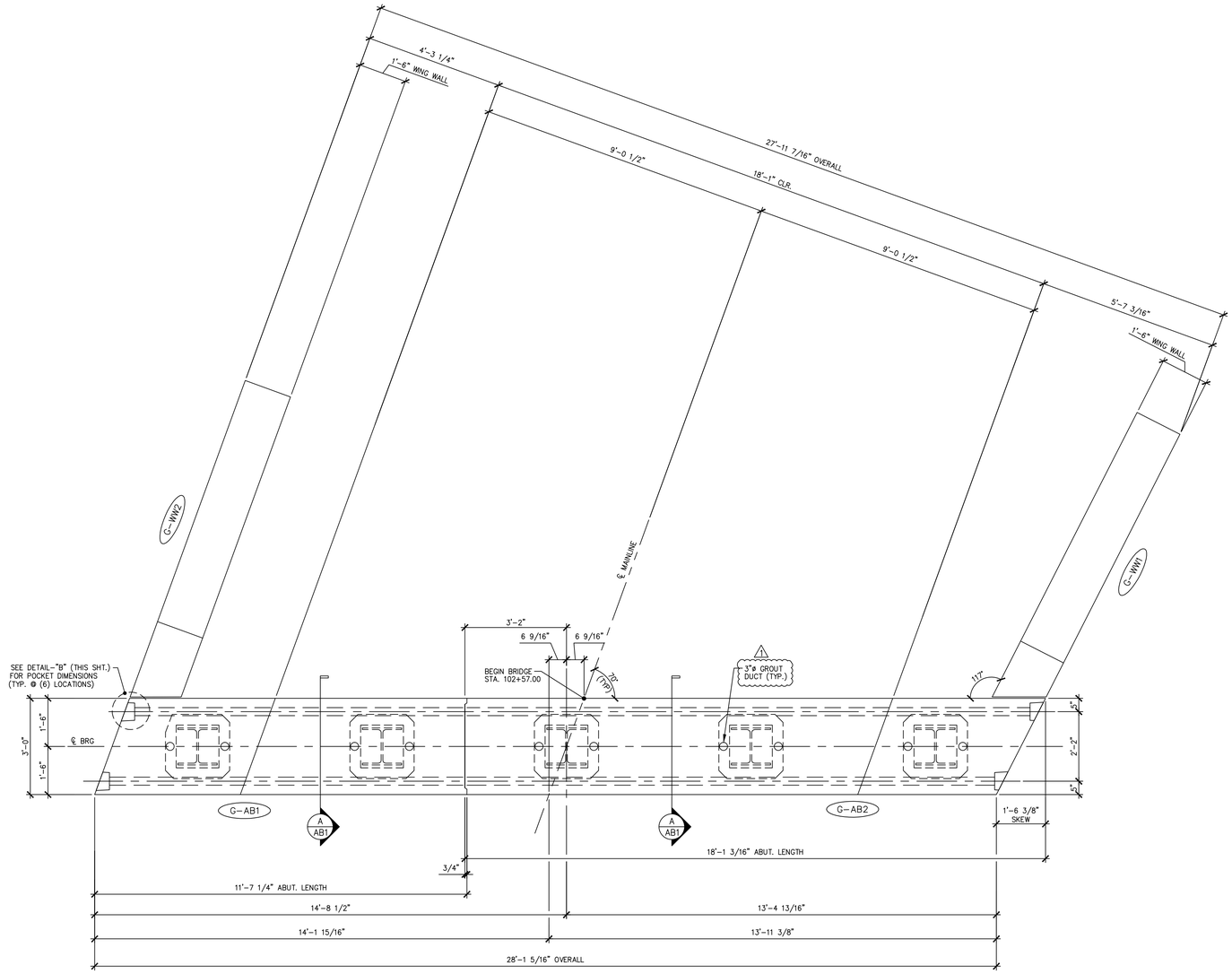

1 / AB1 ABUTMENT ASSEMBLY PLAN
1/4" = 1'-0"

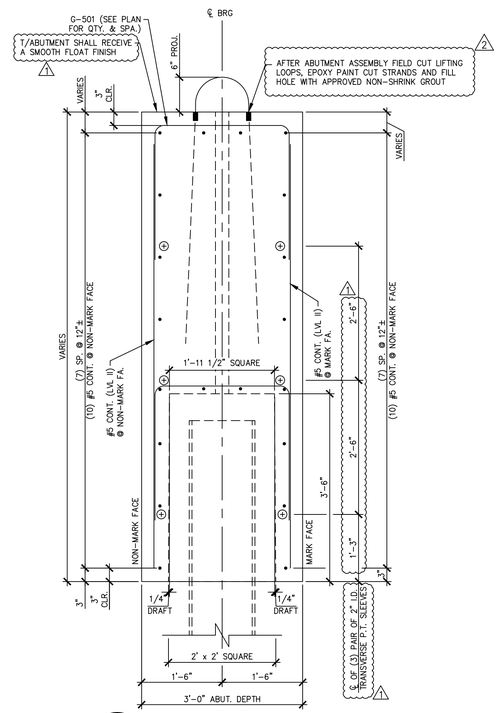

A / AB1 ABUTMENT SECTION
1/4" = 1'-0"

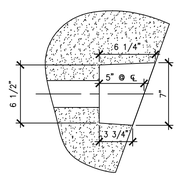

DETAIL – "B"
1 1/2" = 1'-0"

1 4-7-14 REVISED AS NOTED
2 5-6-14 REVISED AS NOTED

APPROVAL STAMP:

J.P. CARRARA & SONS INC.
Precast & Prestress Manufacturer N.T.S.
2464 CASE STR., MIDDLEBURY, VERMONT 05753 Phone:(802)388-6361 Fax:(802)388-9010

STATE OF VERMONT AGENCY OF TRANSPORTATION
COUNTY OF WINDHAM

TOWN OF GUILFORD
ROUTE NO. T.H.10, CLASS III (LOCAL ROAD)
BRIDGE NO.: 65 PROJECT NO.: BRO 1442 (36)

PRECAST ABUTMENT DETAILS

DATE: MAR. 04, 2014
SCALE: NOTED
CHKD: JJJ/KLT DFTM: AAT/RWS
JOB NO: 23420-014
DWG. NO: AB1

Eriksson technologies
813.989.3317
TAMPA, FL LRFD.COM
© 2014 ERIKSSON TECHNOLOGIES, INC. ALL RIGHTS RESERVED

S:\Engineering Services\Carrara\14001 - Guilford Bridge 65\Production Drawings\AutoCAD Files\144236-AB.dwg, 5/6/2014 4:44:37 PM, DWG To PDF.pc3

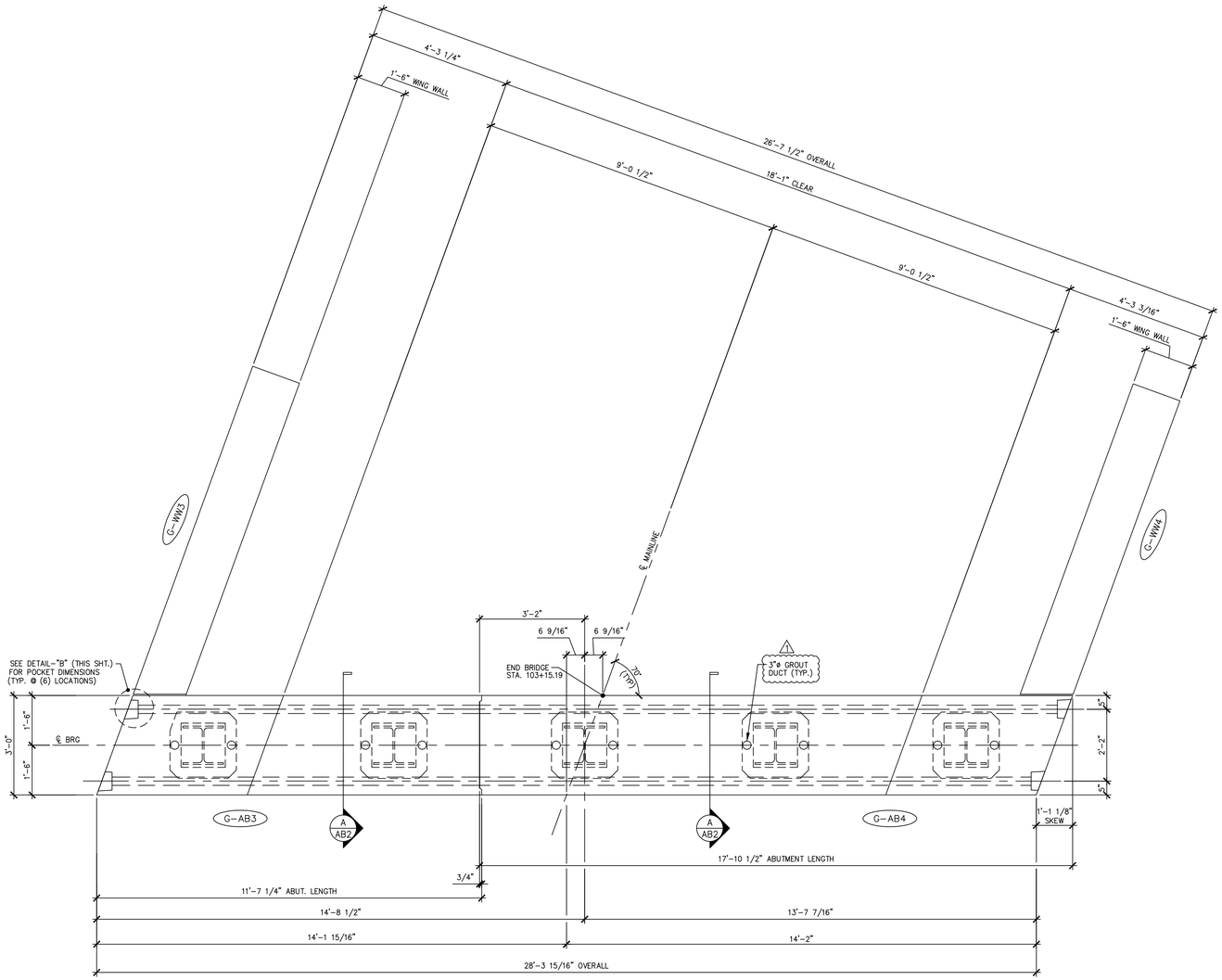

1 / AB2 ABUTMENT ASSEMBLY PLAN
1/4" = 1'-0"

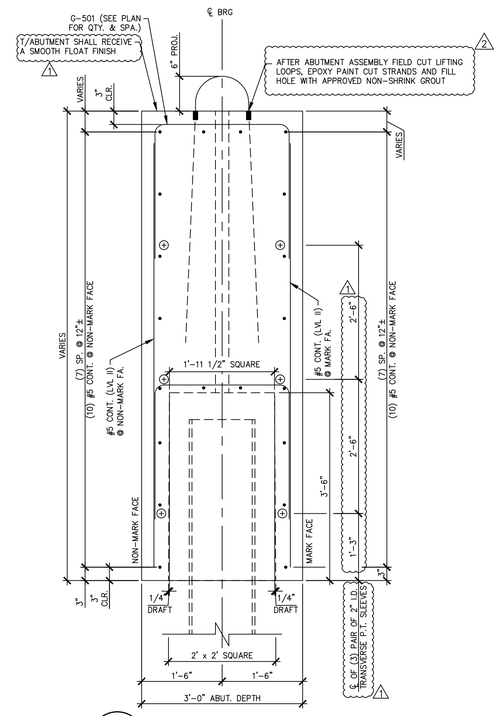

A / AB2 ABUTMENT SECTION
1/4" = 1'-0"

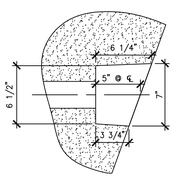

DETAIL – "B"
1 1/2" = 1'-0"

1 4-7-14 REVISED AS NOTED
2 5-6-14 REVISED AS NOTED

APPROVAL STAMP:

J.P. CARRARA & SONS INC.
Precast & Prestress Manufacturer N.T.S.
2464 CASE STR., MIDDLEBURY, VERMONT 05753 Phone:(802)388-6361 Fax:(802)388-9010

STATE OF VERMONT AGENCY OF TRANSPORTATION
COUNTY OF WINDHAM

TOWN OF GUILFORD
ROUTE NO. T.H.10, CLASS III (LOCAL ROAD)
BRIDGE NO.: 65 PROJECT NO.: BRO 1442 (36)

PRECAST ABUTMENT DETAILS

DATE: MAR. 04, 2014
SCALE: NOTED
CHKD: JJ/KLT DFTM: AAT/RWS
JOB NO: 23420-014
DWG. NO: AB2

Eriksson technologies
813.989.3317
TAMPA, FL LRFD.COM
© 2014 ERIKSSON TECHNOLOGIES, INC. ALL RIGHTS RESERVED

S:\Engineering Services\Carrara\14001 - Guilford Bridge 65\Production Drawings\AutoCAD Files\144236-AB.dwg, 5/6/2014 4:44:37 PM, DWG To PDF.pc3

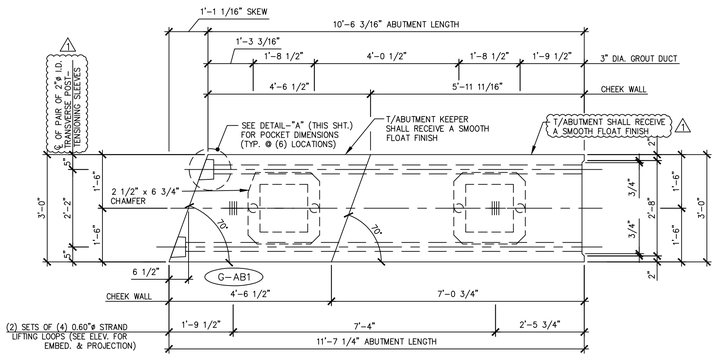

1 AB3 ABUTMENT DIMENSIONAL PLAN VIEW IN FORM

1/2" = 1'-0"

NOTE: PILE VOIDS TO BE FORMED WITH REMOVABLE FORMWORK.

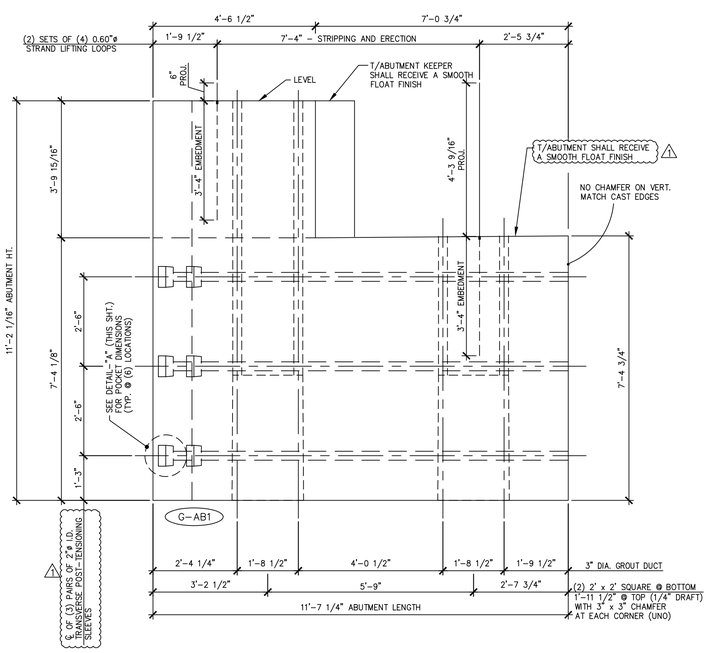

2 AB3 ABUTMENT DIMENSIONAL MARK FACE ELEVATION

1/2" = 1'-0"

SHOP NOTE:
ALL EDGES OF ABUTMENT SHALL RECEIVE A 1" CHAMFER (U.N.O.)

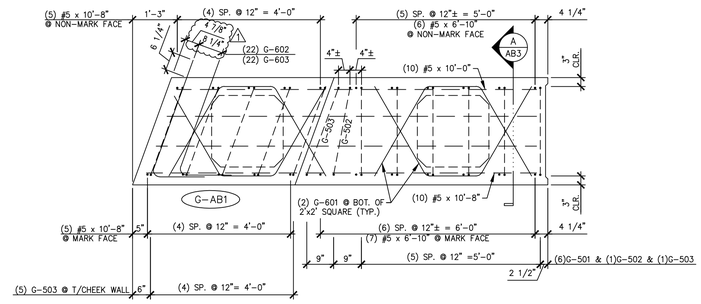

3 AB3 ABUTMENT REINFORCING PLAN VIEW IN FORM

1/2" = 1'-0"

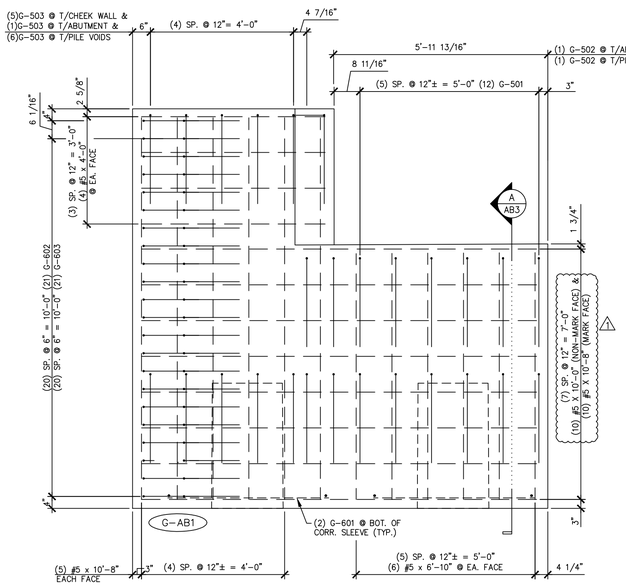

4 AB3 ABUTMENT REINFORCING MARK FACE ELEVATION

1/2" = 1'-0"

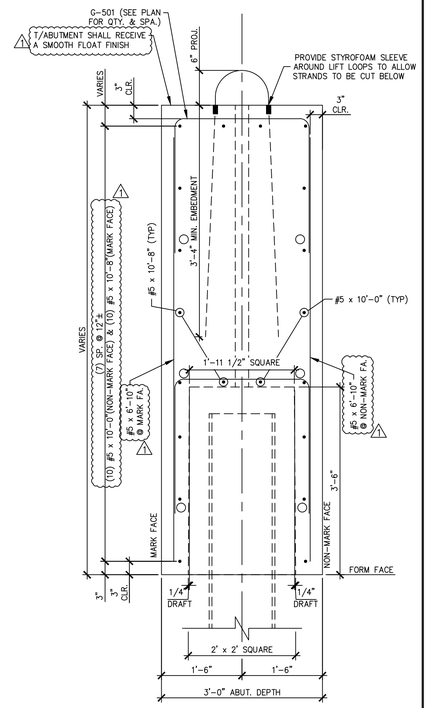

A AB3 ABUTMENT SECTION

3/4" = 1'-0"

MARK: G-AB1	QTY.: 1	WT.: 20.03 T	VOL.: 9.90 cy

MATERIAL LIST / ABUTMENT

ITEM	MARK	DESCRIPTION	QTY.
1	G-501	#5 BENT BAR	12
2	G-502	#5 BENT BAR	2
3	G-503	#5 BENT BAR	12
4		#5 x 4'-0"	10
5		#5 x 6'-10"	12
6		#5 x 10'-0"	10
7		#5 x 10'-8"	20
8			
9	G-601	#6 BENT BAR	4
10	G-602	#6 BENT BAR	22
11	G-603	#6 BENT BAR	22
12			
13			
14			
15			
16			
17			
18		SET OF (4) 0.60"ø x 270 KSI STRAND LIFTING LOOPS	2
19			
20			

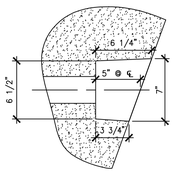

DETAIL – "A"

1 1/2" = 1'-0"

1 4-7-14 REVISED AS NOTED
2 5-6-14 REVISED AS NOTED

APPROVAL STAMP:

J.P. CARRARA & SONS INC.
Precast & Prestress Manufacturer N.T.S.
2464 CASE STR., MIDDLEBURY, VERMONT 05753 Phone:(802)388-6361 Fax:(802)388-9010

STATE OF VERMONT AGENCY OF TRANSPORTATION
COUNTY OF WINDHAM

TOWN OF GUILFORD
ROUTE NO. T.H.10, CLASS III (LOCAL ROAD)
BRIDGE NO.: 65 PROJECT NO.: BRO 1442 (36)

PRECAST ABUTMENT DETAILS

DATE: MAR. 04, 2014
SCALE: NOTED
CHKD: JJ/KLT DFTM: AAT/RWS
JOB NO: 23420-014
DWG. NO: AB3

Eriksson technologies
813.989.3317
TAMPA, FL LRFD.COM
© 2014 ERIKSSON TECHNOLOGIES, INC. ALL RIGHTS RESERVED

S:\Engineering Services\Carrara\14001 - Guilford Bridge 65\Production Drawings\AutoCAD Files\144236-AB.dwg, 5/6/2014 4:44:38 PM, DWG To PDF.pc3

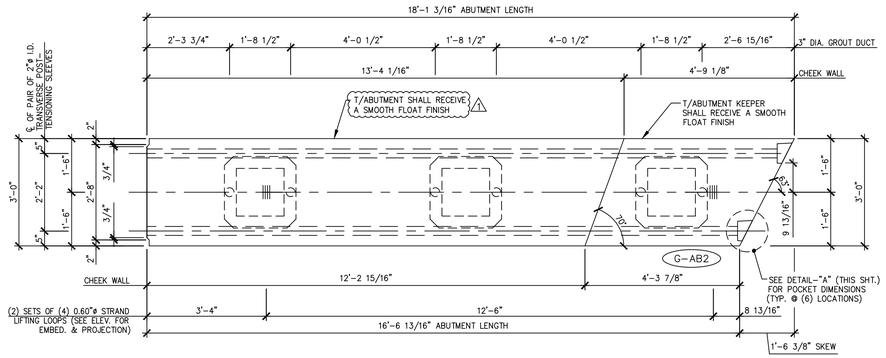

1 / AB4 ABUTMENT DIMENSIONAL PLAN VIEW IN FORM

1/2" = 1'-0"

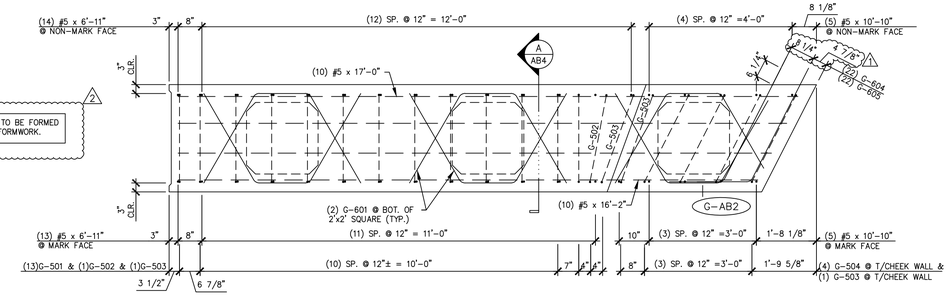

3 / AB4 ABUTMENT REINFORCING PLAN VIEW IN FORM

1/2" = 1'-0"

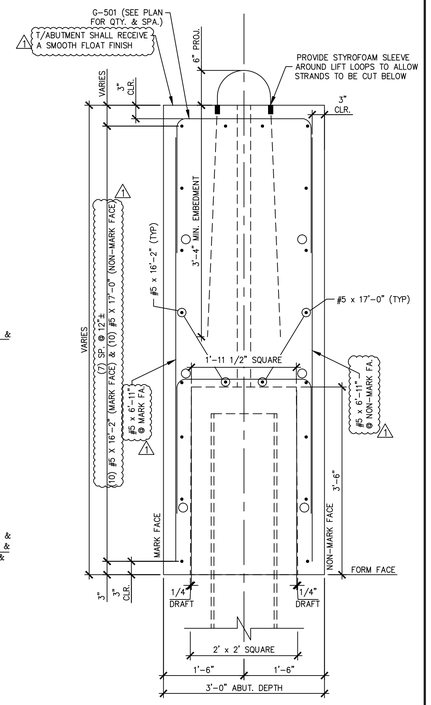

A / AB4 ABUTMENT SECTION

3/4" = 1'-0"

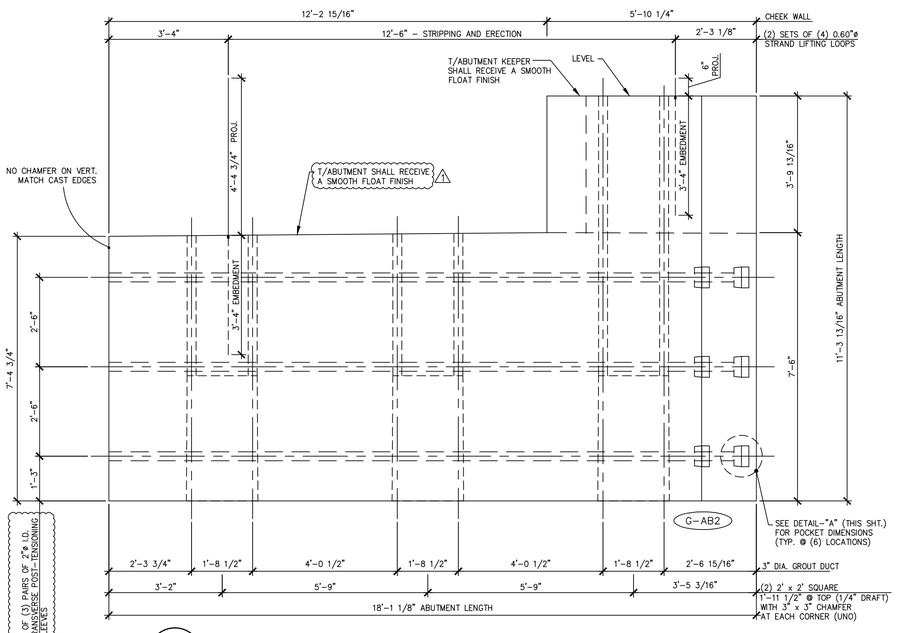

2 / AB4 ABUTMENT DIMENSIONAL MARK FACE ELEVATION

1/2" = 1'-0"

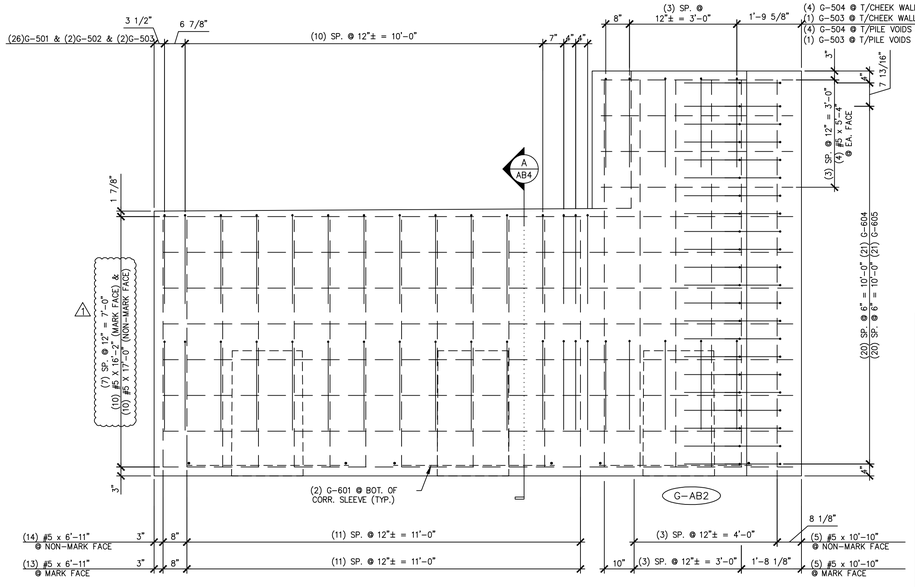

4 / AB4 ABUTMENT REINFORCING MARK FACE ELEVATION

1/2" = 1'-0"

MARK: G-AB2	QTY.: 1	WT.: 30.02 T	VOL.: 14.83 cy

MATERIAL LIST / ABUTMENT

ITEM	MARK	DESCRIPTION	QTY.
1	G-501	#5 BENT BAR	26
2	G-502	#5 BENT BAR	2
3	G-503	#5 BENT BAR	4
4	G-504	#5 BENT BAR	8
5		#5 x 5'-4"	10
6		#5 x 6'-11"	27
7		#5 x 10'-10"	10
8		#5 x 16'-2"	10
9		#5 x 17'-0"	10
10			
11	G-601	#6 BENT BAR	6
12	G-604	#6 BENT BAR	22
13	G-605	#6 BENT BAR	22
14			
15			
16			
17			
18		SET OF (4) 0.60"ø x 270 KSI STRAND LIFTING LOOPS	2
19			
20			

SHOP NOTE:
ALL EDGES OF ABUTMENT SHALL RECEIVE A 1" CHAMFER (U.N.O.)

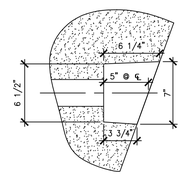

DETAIL – "A"

1 1/2" = 1'-0"

△1 4-7-14 REVISED AS NOTED
△2 5-6-14 REVISED AS NOTED

APPROVAL STAMP:

J.P. CARRARA & SONS INC.
Precast & Prestress Manufacturer N.T.S.
2464 CASE STR., MIDDLEBURY, VERMONT 05753 Phone:(802)388-6361 Fax:(802)388-9010

STATE OF VERMONT AGENCY OF TRANSPORTATION
COUNTY OF WINDHAM

TOWN OF GUILFORD
ROUTE NO. T.H.10, CLASS III (LOCAL ROAD)
BRIDGE NO.: 65 PROJECT NO.: BRO 1442 (36)

PRECAST ABUTMENT DETAILS

DATE: MAR. 04, 2014
SCALE: NOTED
CHKD: JJ/KLT DFTM:AAT/RWS
JOB NO: 23420-014
DWG. NO: AB4

Eriksson technologies
813.989.3317
TAMPA, FL LRFD.COM
© 2014 ERIKSSON TECHNOLOGIES, INC. ALL RIGHTS RESERVED

S:\Engineering Services\Carrara\14001 - Guilford Bridge 65\Production Drawings\AutoCAD Files\144236-AB.dwg, 5/6/2014 4:44:38 PM, DWG To PDF.pc3

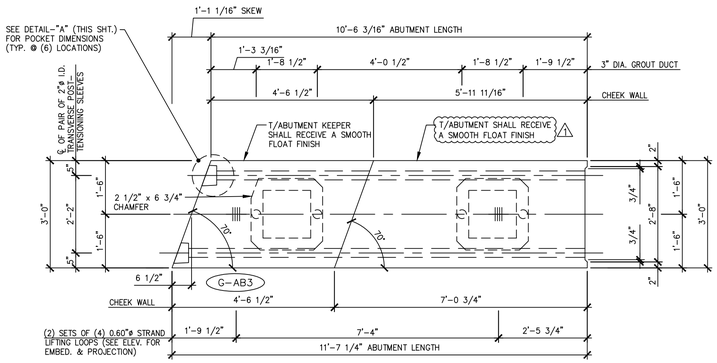

1 / AB5 ABUTMENT DIMENSIONAL PLAN VIEW IN FORM

1/2" = 1'-0"

NOTE: PILE VOIDS TO BE FORMED WITH REMOVABLE FORMWORK. (2)

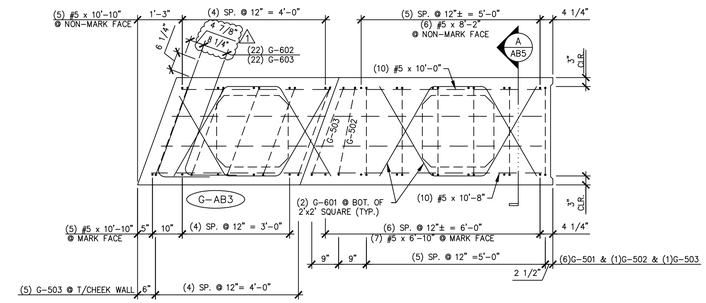

3 / AB5 ABUTMENT REINFORCING PLAN VIEW IN FORM

1/2" = 1'-0"

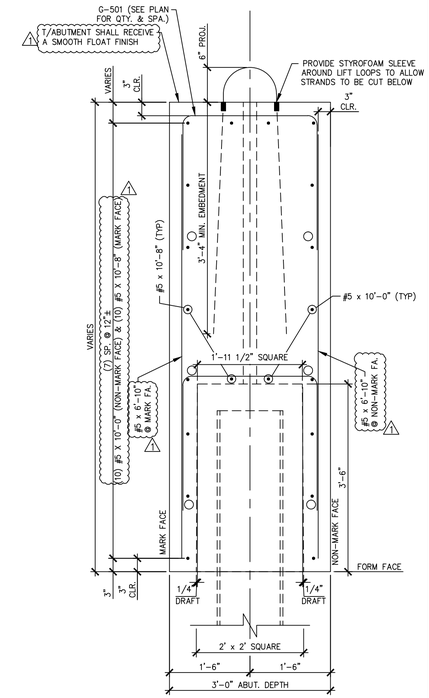

A / AB5 ABUTMENT SECTION

3/4" = 1'-0"

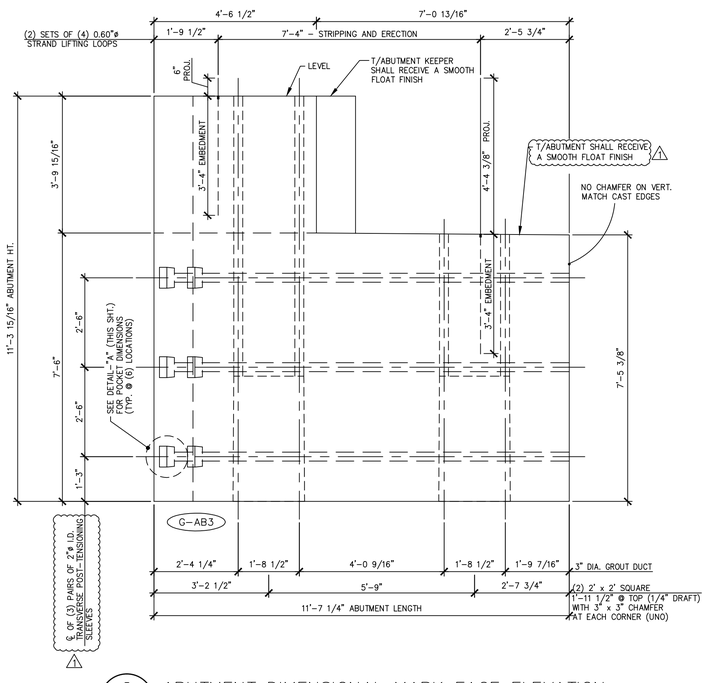

2 / AB5 ABUTMENT DIMENSIONAL MARK FACE ELEVATION

1/2" = 1'-0"

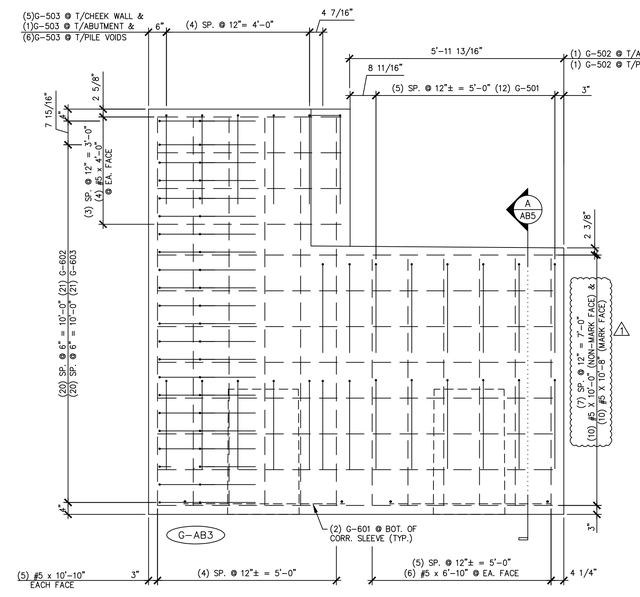

4 / AB5 ABUTMENT REINFORCING MARK FACE ELEVATION

1/2" = 1'-0"

MARK: G-AB3	QTY.: 1	WT.: 20.35 T	VOL.: 10.05 cy

MATERIAL LIST / ABUTMENT

ITEM	MARK	DESCRIPTION	QTY.
1	G-501	#5 BENT BAR	12
2	G-502	#5 BENT BAR	2
3	G-503	#5 BENT BAR	12
4		#5 x 4'-0"	10
5		#5 x 6'-10"	12
6		#5 x 10'-0"	10
7		#5 x 10'-8"	10
8		#5 x 10'-10"	10
9			
10	G-601	#6 BENT BAR	4
11	G-602	#6 BENT BAR	22
12	G-603	#6 BENT BAR	22
13			
14			
15			
16			
17			
18		SET OF (4) 0.60"ø x 270 KSI STRAND LIFTING LOOPS	2
19			
20			

SHOP NOTE:
ALL EDGES OF ABUTMENT SHALL RECEIVE A 1" CHAMFER (U.N.O.)

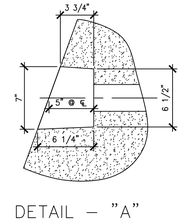

DETAIL – "A"

1 1/2" = 1'-0"

(1) 4-7-14 REVISED AS NOTED
(2) 5-6-14 REVISED AS NOTED

APPROVAL STAMP:

J.P. CARRARA & SONS INC.
Precast & Prestress Manufacturer N.T.S.
2464 CASE STR., MIDDLEBURY, VERMONT 05753 Phone:(802)388-6361 Fax:(802)388-9010

STATE OF VERMONT AGENCY OF TRANSPORTATION
COUNTY OF WINDHAM

TOWN OF GUILFORD
ROUTE NO. T.H.10, CLASS III (LOCAL ROAD)
BRIDGE NO.: 65 PROJECT NO.: BRO 1442 (36)

PRECAST ABUTMENT DETAILS

DATE: MAR. 04, 2014
SCALE: NOTED
CHKD: JJJ/KLT DFTM:AAT/RWS
JOB NO: 23420-014
DWG. NO: AB5

Eriksson technologies
813.989.3317
TAMPA, FL LRFD.COM

© 2014 ERIKSSON TECHNOLOGIES, INC. ALL RIGHTS RESERVED

S:\Engineering Services\Carrara\14001 - Guilford Bridge 65\Production Drawings\AutoCAD Files\14423G-AB.dwg, 5/6/2014 4:44:39 PM, DWG To PDF.pc3

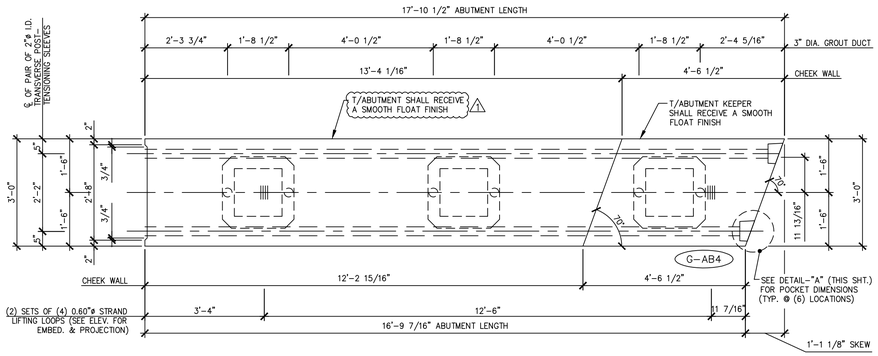

1 / AB6 ABUTMENT DIMENSIONAL PLAN VIEW IN FORM

1/2" = 1'-0"

NOTE: PILE VOIDS TO BE FORMED WITH REMOVABLE FORMWORK.

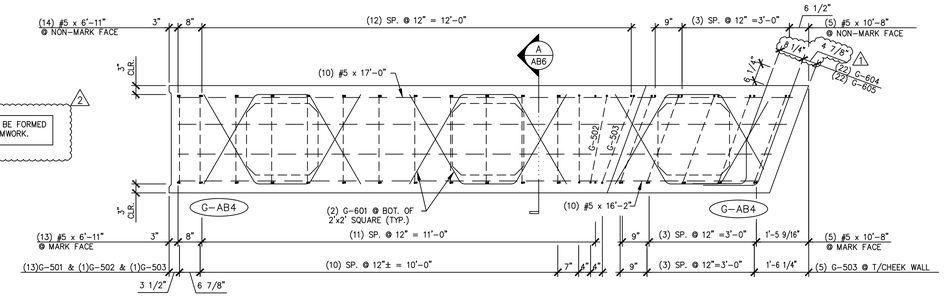

3 / AB6 ABUTMENT REINFORCING PLAN VIEW IN FORM

1/2" = 1'-0"

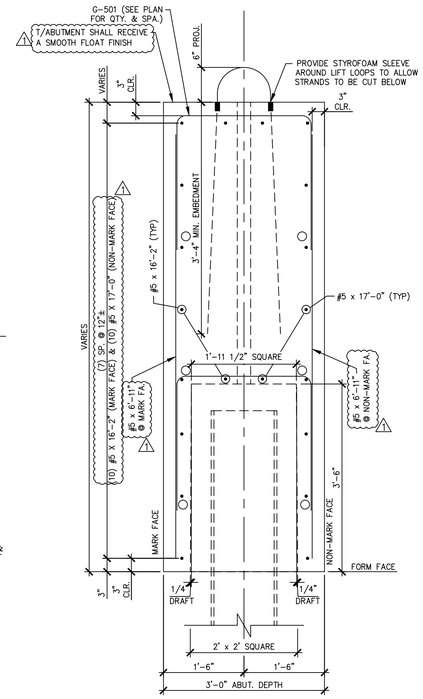

A / AB6 ABUTMENT SECTION

3/4" = 1'-0"

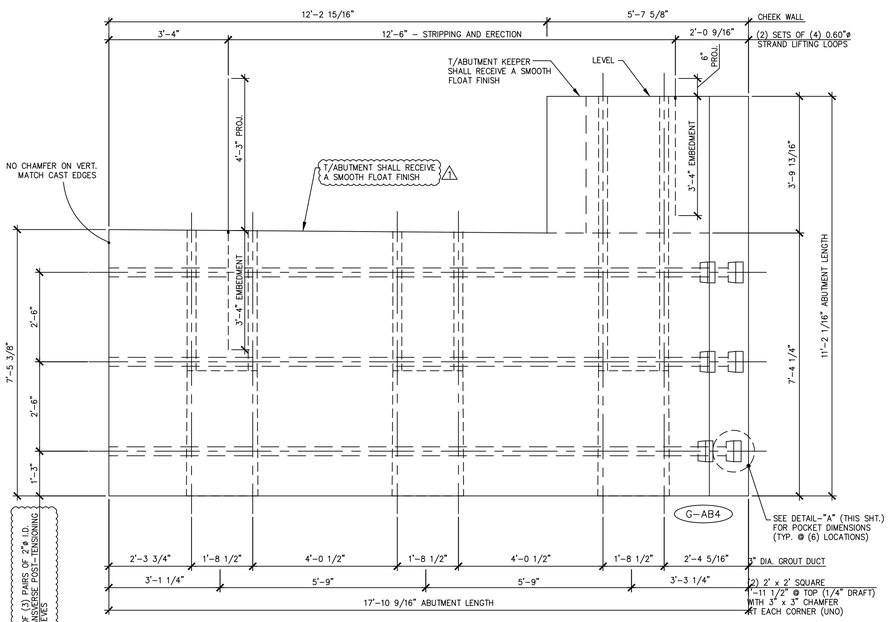

2 / AB6 ABUTMENT DIMENSIONAL MARK FACE ELEVATION

1/2" = 1'-0"

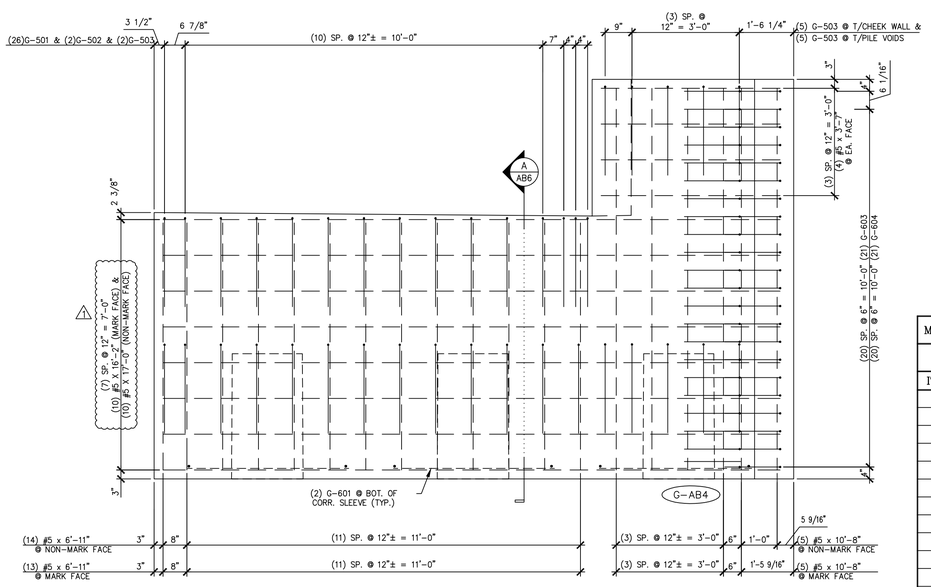

4 / AB6 ABUTMENT REINFORCING MARK FACE ELEVATION

1/2" = 1'-0"

MARK: G-AB4	QTY.: 1	WT.: 29.82 T	VOL.: 14.73 cy

MATERIAL LIST / ABUTMENT

ITEM	MARK	DESCRIPTION	QTY.
1	G-501	#5 BENT BAR	26
2	G-502	#5 BENT BAR	2
3	G-503	#5 BENT BAR	12
4		#5 x 3'-7"	10
5		#5 x 6'-11"	27
6		#5 x 10'-8"	10
7		#5 x 16'-2"	10
8		#5 x 17'-0"	10
9			
10			
11	G-601	#6 BENT BAR	6
12	G-604	#6 BENT BAR	22
13	G-605	#6 BENT BAR	22
14			
15			
16			
17			
18		SET OF (4) 0.60"ø x 270 KSI STRAND LIFTING LOOPS	2
19			
20			

SHOP NOTE:
ALL EDGES OF ABUTMENT SHALL RECEIVE A 1" CHAMFER (U.N.O.)

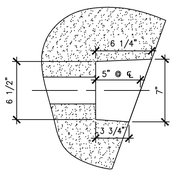

DETAIL – "A"

1 1/2" = 1'-0"

△1 4-7-14 REVISED AS NOTED
△2 5-6-14 REVISED AS NOTED

APPROVAL STAMP:

J.P. CARRARA & SONS INC.
Precast & Prestress Manufacturer N.T.S.
2464 CASE STR., MIDDLEBURY, VERMONT 05753 Phone:(802)388-6361 Fax:(802)388-9010

STATE OF VERMONT AGENCY OF TRANSPORTATION
COUNTY OF WINDHAM

TOWN OF GUILFORD
ROUTE NO. T.H.10, CLASS III (LOCAL ROAD)
BRIDGE NO.: 65 PROJECT NO.: BRO 1442 (36)

PRECAST ABUTMENT DETAILS

DATE: MAR. 04, 2014
SCALE: NOTED
CHKD: JJ/KLT DFTM:AAT/RWS
JOB NO: 23420-014
DWG. NO: AB6

Eriksson technologies
813.989.3317
TAMPA, FL LRFD.COM
© 2014 ERIKSSON TECHNOLOGIES, INC. ALL RIGHTS RESERVED

S:\Engineering Services\Carrara\14001 - Guilford Bridge 65\Production Drawings\AutoCAD Files\144236-AB.dwg, 5/6/2014 4:44:39 PM, DWG To PDF.pc3

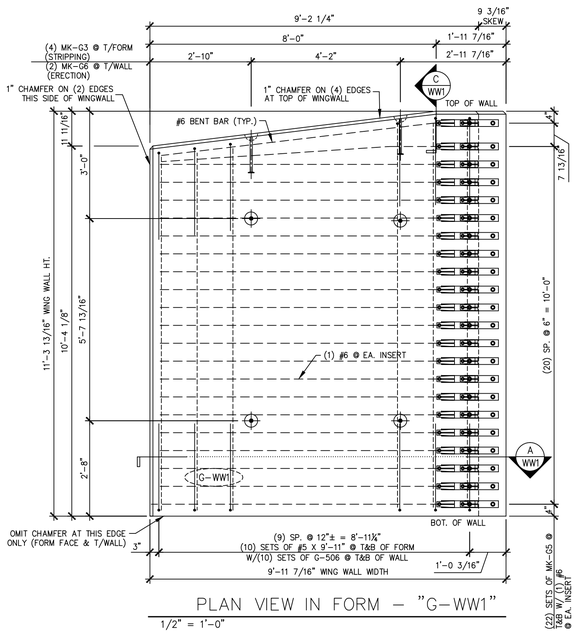

PLAN VIEW IN FORM – "G-WW1"

1/2" = 1'-0"

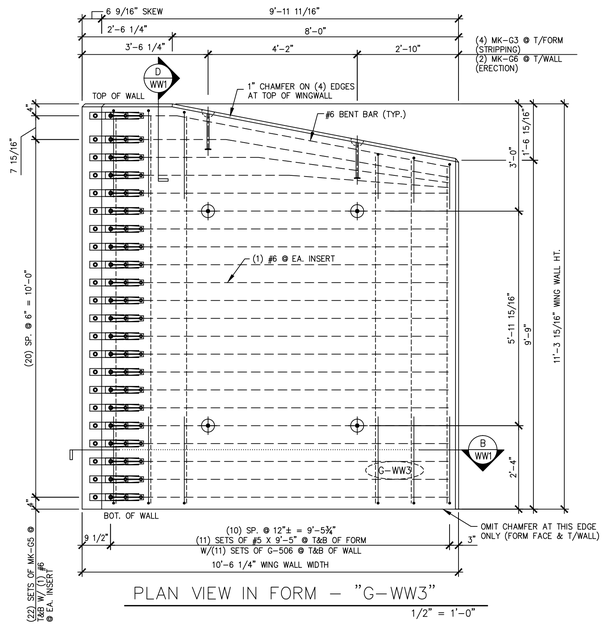

PLAN VIEW IN FORM – "G-WW3"

1/2" = 1'-0"

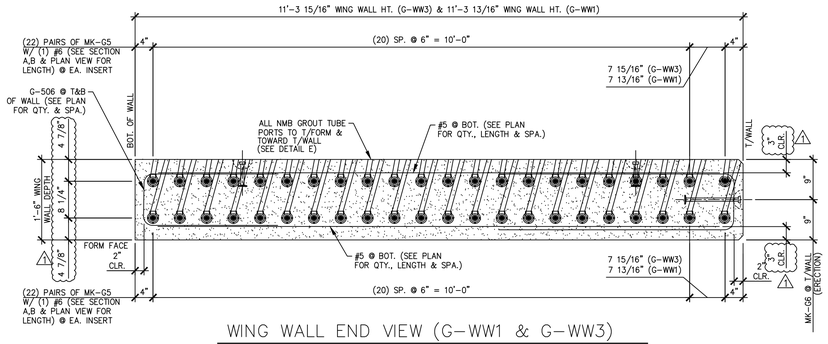

WING WALL END VIEW (G-WW1 & G-WW3)

3/4" = 1'-0"

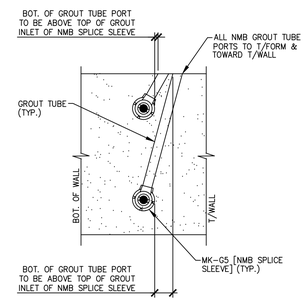

DETAIL – "E"

1-1/2" = 1'-0"

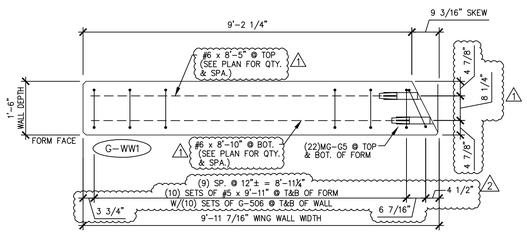

A WW1 G-WW1 SECTION

1/2" = 1'-0"

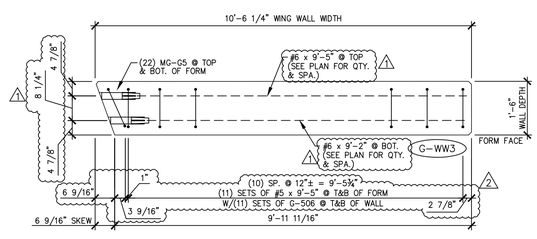

B WW1 G-WW3 SECTION

1/2" = 1'-0"

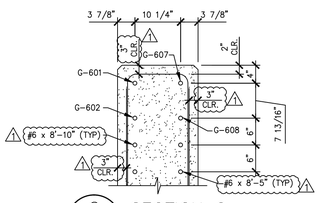

C WW1 SECTION C

3/4" = 1'-0"

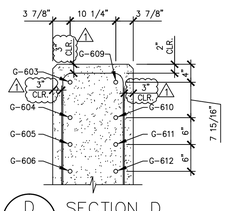

D WW1 SECTION D

3/4" = 1'-0"

SHOP NOTE:
ALL EDGES OF WING WALLS, FORM FACE & T/WALL FACE, SHALL RECEIVE A 1" CHAMFER (UNLESS NOTED OTHERWISE)

MARK:	G-WW1	QTY.: 1	WT.: 11.81 T	VOL.: 5.84 cy
MARK:	G-WW3	QTY.: 1	WT.: 12.39 T	VOL.: 6.12 cy

MATERIAL LIST / WING WALL

ITEM	MARK	DESCRIPTION	QTY./WING WALL G-WW1	QTY./WING WALL G-WW3
1	G-506	#5 BENT BAR	1 22	24
2	G-601	#6 BENT BAR	1	0
3	G-602	#6 BENT BAR	1	0
4	G-603	#6 BENT BAR	0	1
5	G-604	#6 BENT BAR	0	1
6	G-605	#6 BENT BAR	0	1
7	G-606	#6 BENT BAR	0	1
8	G-607	#6 BENT BAR	1	0
9	G-608	#6 BENT BAR	1	0
10	G-609	#6 BENT BAR	0	1
11	G-610	#6 BENT BAR	0	1
12	G-611	#6 BENT BAR	0	1
13	G-612	#6 BENT BAR	0	1
14				
15		#5 x 9'-5"	0	1 24
16		#5 x 9'-11"	1 22	0
17				
18		#6 x 8'-5" 1	20	0
19		#6 x 8'-10"	20	0
20		#6 x 9'-2"	0	18
21		#6 x 9'-5"	0	18
22				
23				
24				
25	MK-G3	4T x 9 1/2" SWIFT LIFT LIFTER	4	4
26	MK-G5	NMB SPLICE SLEEVE 6U-X(PG)	44	44
27	MK-G6	20T x 19 3/4" SWIFT LIFT LIFTER	2	2

1 4-7-14 REVISED AS NOTED
2 5-6-14 REVISED AS NOTED

APPROVAL STAMP:

J.P. CARRARA & SONS INC.
Precast & Prestress Manufacturer N.T.S.
2464 CASE STR., MIDDLEBURY, VERMONT 05753 Phone:(802)388-6361 Fax:(802)388-9010

STATE OF VERMONT AGENCY OF TRANSPORTATION
COUNTY OF WINDHAM

TOWN OF GUILFORD
ROUTE NO. T.H.10, CLASS III (LOCAL ROAD)
BRIDGE NO.: 65 PROJECT NO.: BRO 1442 (36)

PRECAST WING WALL DETAILS

DATE: MAR. 04, 2014
SCALE: NOTED
CHKD: JJJ/KLT DFTM:AAT/RWS
JOB NO: 23420-014
DWG. NO: WW1

Eriksson technologies
813.989.3317
TAMPA, FL LRFD.COM
© 2014 ERIKSSON TECHNOLOGIES, INC. ALL RIGHTS RESERVED

S:\Engineering Services\Carrara\14001 - Guilford Bridge 65\Production Drawings\AutoCAD Files\144236-WW1.dwg, 5/6/2014 4:44:42 PM, DWG To PDF.pc3

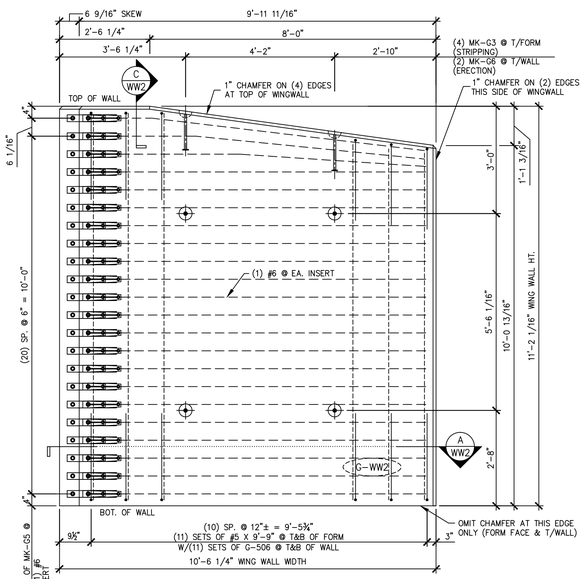

PLAN VIEW IN FORM – "G-WW2"

1/2" = 1'-0"

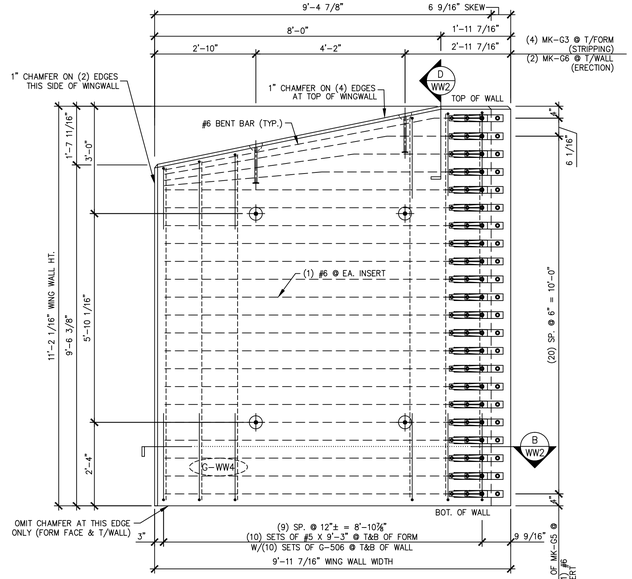

PLAN VIEW IN FORM – "G-WW4"

1/2" = 1'-0"

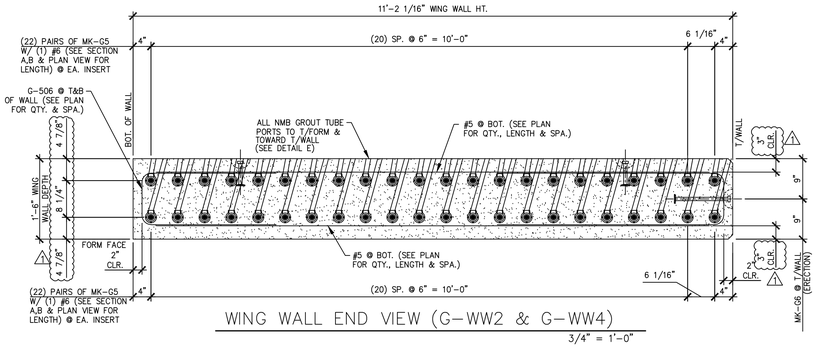

WING WALL END VIEW (G-WW2 & G-WW4)

3/4" = 1'-0"

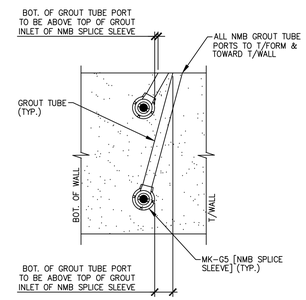

DETAIL – "E"

1-1/2" = 1'-0"

MARK:	G-WW2	QTY.:	1	WT.:	12.42 T	VOL.:	6.13 cy
MARK:	G-WW4	QTY.:	1	WT.:	11.49 T	VOL.:	5.68 cy

MATERIAL LIST / WING WALL

ITEM	MARK	DESCRIPTION	QTY./WING WALL G-WW2	QTY./WING WALL G-WW4
1	G-506	#5 BENT BAR	△1 24	22
2	G-613	#6 BENT BAR	1	0
3	G-614	#6 BENT BAR	1	0
4	G-615	#6 BENT BAR	1	0
5	G-616	#6 BENT BAR	1	0
6	G-617	#6 BENT BAR	1	0
7	G-618	#6 BENT BAR	1	0
8	G-619	#6 BENT BAR	0	1
9	G-620	#6 BENT BAR	0	1
10	G-621	#6 BENT BAR	0	1
11	G-622	#6 BENT BAR	0	1
12	G-623	#6 BENT BAR	0	1
13	G-624	#6 BENT BAR	0	1
14	G-625	#6 BENT BAR	0	1
15	G-626	#6 BENT BAR	0	1
16				
17		#5 x 9'-3"	0	△1 22
18		#5 x 9'-9"	△1 24	0
19				
20				
21				
22		#6 x 8'-7" △1	0	18
23		#6 x 8'-10"	0	18
24		#6 x 9'-2"	19	0
25		#6 x 9'-5"	19	0
26				
27	MK-G3	4T x 9 1/2" SWIFT LIFT LIFTER	4	4
28	MK-G5	NMB SPLICE SLEEVE 6U-X(PG)	44	44
29	MK-G6	20T x 19 3/4" SWIFT LIFT LIFTER	2	2

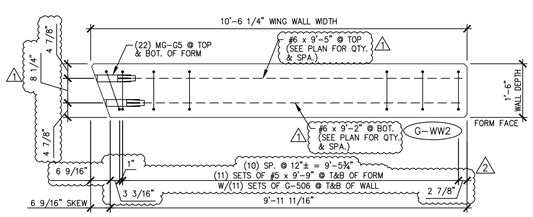

A WW2 G-WW2 SECTION

1/2" = 1'-0"

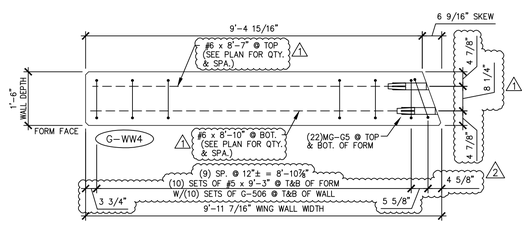

B WW2 G-WW4 SECTION

1/2" = 1'-0"

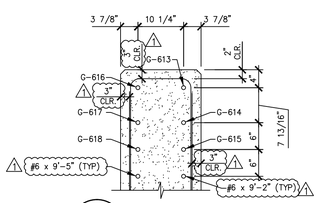

C WW2 SECTION C

3/4" = 1'-0"

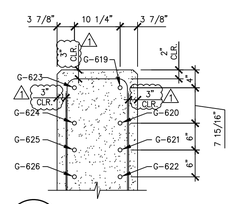

D WW2 SECTION D

3/4" = 1'-0"

SHOP NOTE:
ALL EDGES OF WNG WALLS, FORM FACE & T/WALL FACE, SHALL RECEIVE A 1" CHAMFER (UNLESS NOTED OTHERWISE)

△1 4-7-14 REVISED AS NOTED
△2 5-6-14 REVISED AS NOTED

APPROVAL STAMP:

J.P. CARRARA & SONS INC.
Precast & Prestress Manufacturer N.T.S.
2464 CASE STR., MIDDLEBURY, VERMONT 05753 Phone:(802)388-6361 Fax:(802)388-9010

STATE OF VERMONT AGENCY OF TRANSPORTATION
COUNTY OF WINDHAM

TOWN OF GUILFORD
ROUTE NO. T.H.10, CLASS III (LOCAL ROAD)
BRIDGE NO.: 65 PROJECT NO.: BRO 1442 (36)

PRECAST WING WALL DETAILS

DATE: MAR. 04, 2014
SCALE: NOTED
CHKD: JJJ/KLT DFTM:AAT/RWS
JOB NO: 23420-014
DWG. NO: WW2

Eriksson technologies
813.989.3317
TAMPA, FL LRFD.COM
© 2014 ERIKSSON TECHNOLOGIES, INC. ALL RIGHTS RESERVED

S:\Engineering Services\Carrara\14001 - Guilford Bridge 65\Production Drawings\AutoCAD Files\144236-WW1.dwg, 5/6/2014 4:44:43 PM, DWG To PDF.pc3

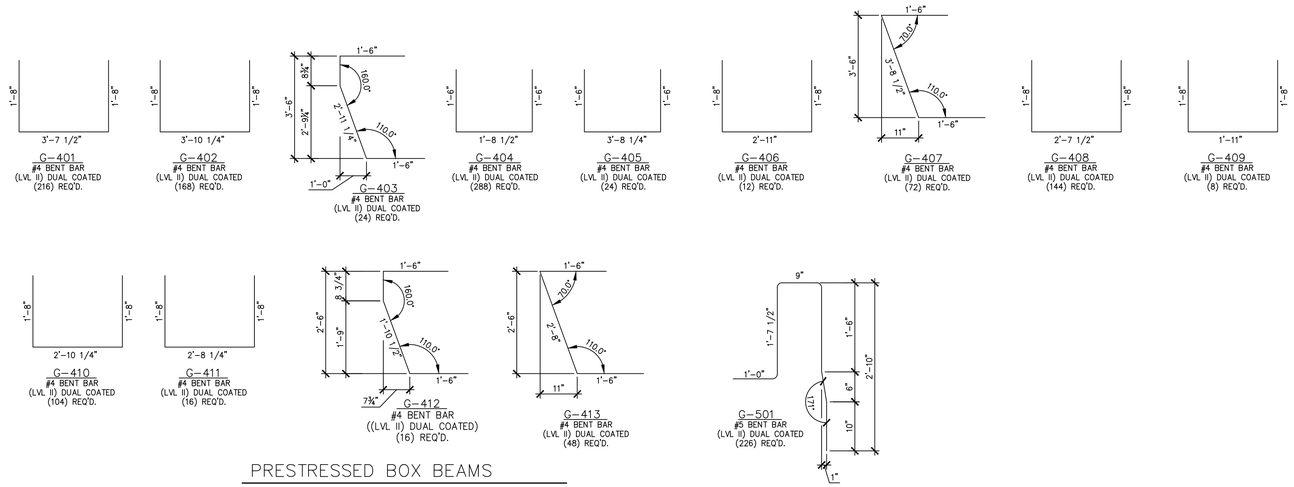

PRESTRESSED BOX BEAMS

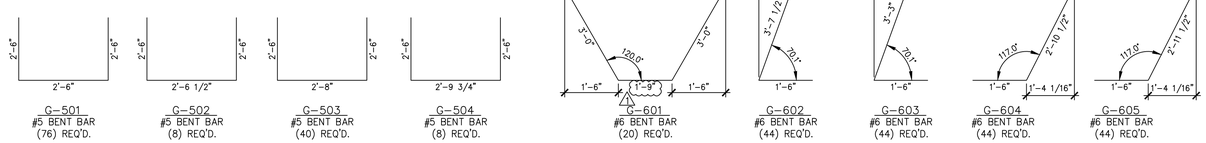

PRECAST ABUTMENTS

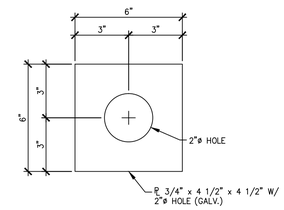

E M – G 4

3" = 1'-0"

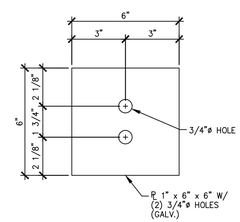

E M – G 5

3" = 1'-0"

MISCELLANEOUS MATERIALS

ITEM	MARK	QTY.	DESCRIPTION	REMARKS	
1		42	#5 x 27'-7" ((LEVEL II) DUAL COATED)		PRESTRESSED BOX BEAMS
2		42	#5 x 32'-7" ((LEVEL II) DUAL COATED)		
3					
4	MK-G1	36	1"ø GUARD RAIL ANCHOR "U" BOLTS W/ (4)NUTS, (4)WASHERS (SUPPLIED BY OTHERS)	ASTM A449 OR 4325 (GALV.)	
5					
6		20	SET OF (3) 0.60"ø x 270 KSI STRAND LIFTING LOOPS		
7					
8					
9	EM-G1	10	1 1/2"ø x 4'-10 3/4" ANCHOR ROD (GALV.)	FOR ERECTION	
10	EM-G2	10	1 1/2"ø HEAVY HEX NUT (GALV.) & 1 1/2"ø STD. WASHER (GALV.)	FOR ERECTION	
11	EM-G3	10	1/2" x 5" x 5" W/ 1 3/4"ø HOLE (GALV.)	FOR ERECTION	
12	EM-G4	8	3/4" x 6" x 6" W/ 2"ø HOLE (GALV.)	FOR ERECTION; SEE DETAIL THIS SHEET	
13	EM-G5	4	1" x 6" x 6" W/ (2) 3/4"ø HOLES (GALV.)	FOR ERECTION; SEE DETAIL THIS SHEET	
14		8	0.6"ø x 26'-0" POLY-STRAND	FOR ERECTION	
15					PRECAST ABUTMENTS
16		20	#5 x 3'-7"		
17		20	#5 x 4'-0"		
18		24	#5 x 6'-10"		
19		54	#5 x 6'-11"		
20		20	#5 x 10'-0"		
21		42	#5 x 10'-8"		
22		20	#5 x 10'-10"		
23		20	#5 x 17'-0"		
24					
25		8	SET OF (4) 0.60"ø x 270 KSI STRAND LIFTING LOOPS		
26					
27	EM-G4	12	3/4" x 6" x 6" W/ 2"ø HOLE (GALV.) △1	FOR ERECTION; SEE DETAIL THIS SHEET	
28		24	0.5"ø x 34'-0" POLY-STRAND	FOR ERECTION	
29					
30					
31					
32					
33					
34					
35					
36					
37					
38					
39					
40					

△1 4-7-14 REVISED AS NOTED

APPROVAL STAMP:

J.P. CARRARA & SONS INC.
Precast & Prestress Manufacturer N.T.S.
2464 CASE STR., MIDDLEBURY, VERMONT 05753 Phone:(802)388-6361 Fax:(802)388-9010

STATE OF VERMONT AGENCY OF TRANSPORTATION
COUNTY OF WINDHAM

TOWN OF GUILFORD
ROUTE NO. T.H.10, CLASS III (LOCAL ROAD)
BRIDGE NO.: 65 PROJECT NO.: BRO 1442 (36)

MATERIALS LIST

DATE: MAR. 04, 2014
SCALE: NOTED
CHKD: JJ/KLT DFTM:AAT/RWS
JOB NO: 23420-014
DWG. NO: M1

Eriksson technologies
813.989.3317
TAMPA, FL LRFD.COM
© 2014 ERIKSSON TECHNOLOGIES, INC. ALL RIGHTS RESERVED

S:\Engineering Services\Carrara\14001 - Guilford Bridge 65\Production Drawings\AutoCAD Files\144236-M1.dwg, 5/6/2014 4:44:46 PM, DWG To PDF.pc3

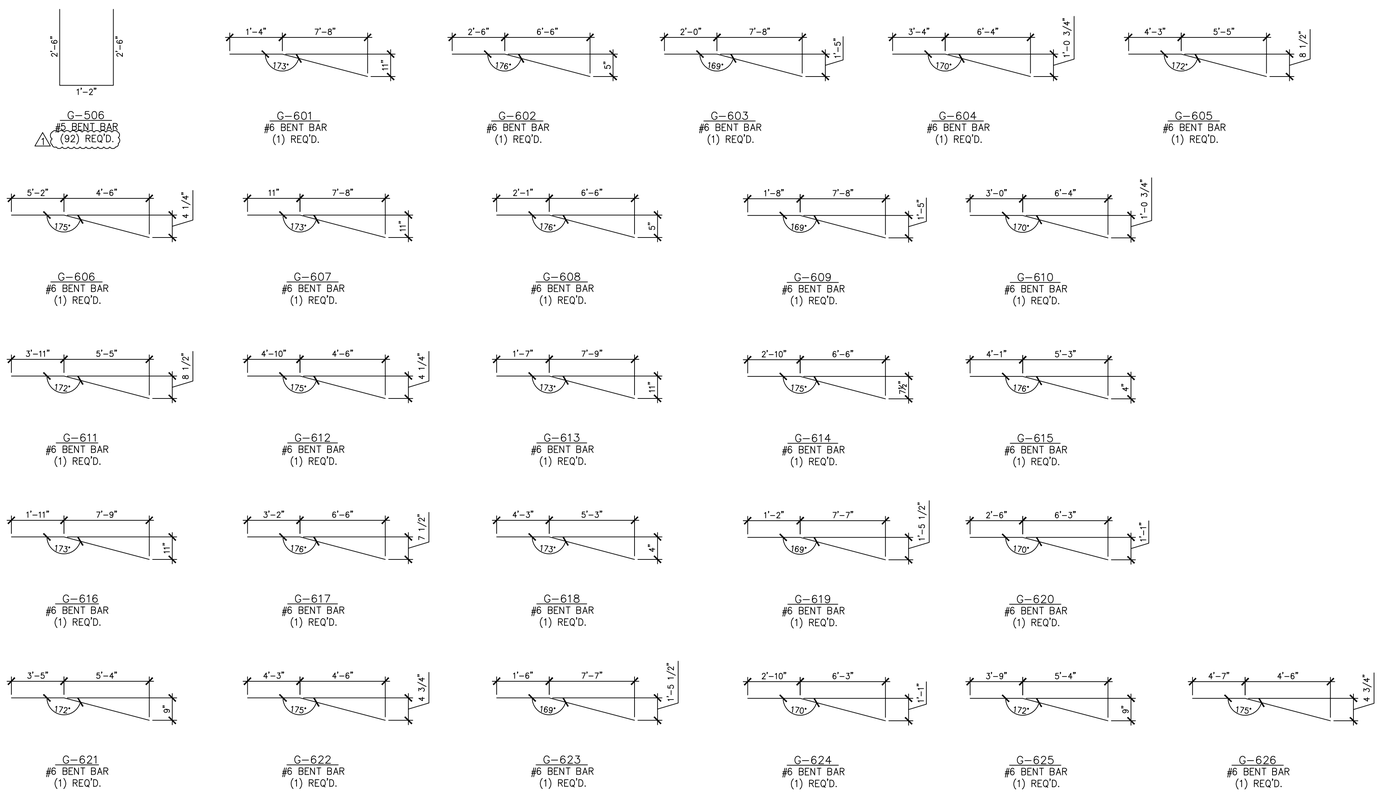

PRECAST WINGWALLS

MISCELLANEOUS MATERIALS

ITEM	MARK	QTY.	DESCRIPTION	REMARKS
1		22	#5 x 9'-3"	
2		24	#5 x 9'-5"	
3		24	#5 x 9'-9"	
4		22	#5 x 9'-11"	
5		1		
6				
7		20	#6 x 8'-5"	
8		18	#6 x 8'-7" 1	
9		38	#6 x 8'-10"	
10		37	#6 x 9'-2"	
11		37	#6 x 9'-5"	
12				
13				
14				
15				
16				
17	MK-G3	16	4T x 9 1/2" SWIFT LIFT LIFTER	
18	MK-G5	176	NMB SPLICE SLEEVE 6U-X(PG)	ORDER (3) EXTRA FOR TESTING - TOTAL (179)
19	MK-G6	8	20T x 19 3/4" SWIFT LIFT LIFTER	1
20				
21				
22				

PRECAST WING WALLS

1 4-7-14 REVISED AS NOTED

APPROVAL STAMP:

J.P. CARRARA & SONS INC.
Precast & Prestress Manufacturer N.T.S.
2464 CASE STR., MIDDLEBURY, VERMONT 05753 Phone:(802)388-6361 Fax:(802)388-9010

STATE OF VERMONT AGENCY OF TRANSPORTATION
COUNTY OF WINDHAM

TOWN OF GUILFORD
ROUTE NO. T.H.10, CLASS III (LOCAL ROAD)
BRIDGE NO.: 65 PROJECT NO.: BRO 1442 (36)

MATERIALS LIST

DATE: MAR. 04, 2014
SCALE: NOTED
CHKD: JJ/KLT DFTM:AAT/RWS
JOB NO: 23420-014
DWG. NO: M2

Eriksson technologies
813.989.3317
TAMPA, FL LRFD.COM
© 2014 ERIKSSON TECHNOLOGIES, INC. ALL RIGHTS RESERVED

S:\Engineering Services\Carrara\14001 - Guilford Bridge 65\Production Drawings\AutoCAD Files\144236-M1.dwg, 5/6/2014 4:44:46 PM, DWG To PDF.pc3