RENAUD BROS., INC.

283 Fort Bridgeman Road #2, Vernon, VT 05354 **phone (802) 257-7383**
fax (802) 257-7308

Brattlboro BRO 1442 (35)

Temporary Bridge Re-submittal

This submittal is to explain how Renaud Brothers came up with the width of the temporary bridge. The contract documents do not have a plan or detail clearly identifying a width for the one way temporary bridge. When referencing the temporary bridge information on sheet 2 of the contract plans there is a minimum length and a clearance from the stream bed dimension but no width dimension. At the bottom of sheet 2 there is a temporary bridge profile that shows the bridge clear opening and the bottom of beam elevation. This information is in discrepancy to the above mentioned information. The traffic maintenance notes on sheet 6 make reference to specification section 528 which is the only place the minimum width is clearly depicted. The specification calls for a minimum 14'-6" clear dimension from rail to rail. With this information we utilized a bridge that is 15'-4" rail to rail. Renaud Brothers did not intend to install a bridge that was not the required width. Renaud Brothers did not see a defined width for the temporary bridge and consulted the specification to determine the width of the bridge.

We did install the temporary bridge without prior approval and recognize this as fault according to specification section 105.03 (b)(2)a.

We have test run the bridge with Brattleboro Fire Department's Ladder Truck and it passed through with no trouble. We also had a school bus drive through the bridge and it passed through as well with no trouble. We recognize the South West corner is tight and will address that by adding more square footage of roadway, the plans and details are included in this submittal.

Charlie Ezequelle

From: Mike Bucossi [dbucossi@brattleboro.org]
Sent: Thursday-May 01-2014 5-21 PM
To: 'Stephen Barrett'; 'Charlie Ezequelle'
Cc: Asst Chief Pete Lynch
Subject: RE: Brattleboro BRO 1442(35) - Ladder Truck Turning Movements

The driver that came up tells me the maneuver was easily done, he has no concerns and that he feels that the approach(s) are good. I will have each shift come take a look. Thank you for taking our input.

Michael Bucossi
Fire Chief
Town of Brattleboro
103 Elliot St
Brattleboro, VT 05301
(802) 254-4831
www.brattleborofire.org

From: Stephen Barrett [mailto:sbarrett@brattleboro.org]
Sent: Thursday, May 01, 2014 4:27 PM
To: 'Charlie Ezequelle'
Cc: 'Mike Bucossi'
Subject: RE: Brattleboro BRO 1442(35) - Ladder Truck Turning Movements

Charlie,

The ladder truck had no problem making the turning radius onto the temporary bridge on Sunset Lake Road . The truck used 10 feet of the 15 foot deck on the north & south approach. The Fire Chief will report to you after he has discussed with the driver and officer that completed the test, he has the final say.
You may want to have a school bus take a test run also. If you need assistance let me know.

Steve

From: Charlie Ezequelle [mailto:cezequelle@gmail.com]
Sent: Thursday, May 01, 2014 3:29 PM
To: 'Stephen Barrett'
Subject: RE: Brattleboro BRO 1442(35) - Ladder Truck Turning Movements

Hi Steve,

Sounds like the truck already made it through the bridge. Could you and Chief Bucossi confirm the ladder truck made it through?

Thank you, Charlie

From: Charlie Ezequelle [mailto:cezequelle@gmail.com]
Sent: Thursday-May 01-2014 2-14 PM
To: 'Stephen Barrett'
Subject: RE: Brattleboro BRO 1442(35) - Ladder Truck Turning Movements

Steve,

We are ready for the truck. I propose an 8am slot, let me know if the fire department can do that.

Thanks, Charlie

From: Stephen Barrett [mailto:sbarrett@brattleboro.org]
Sent: Thursday-May 01-2014 11-04 AM
To: 'Charlie Ezequelle'
Subject: FW: Brattleboro BRO 1442(35) - Ladder Truck Turning Movements

---

From: Chenette, Michael [mailto:Michael.Chenette@state.vt.us]
Sent: Thursday, March 06, 2014 1:40 PM
To: 'Stephen Barrett'
Cc: Sumner, Todd; Ross, Fred; 'Burbank, Scott'
Subject: FW: Brattleboro BRO 1442(35) - Ladder Truck Turning Movements

Steve,

The ladder truck turning movements have been reviewed and it looks like it should be capable of maneuvering through the detour, as designed.

Let me or Todd know if you have any questions. FYI – I will be out on Vacation beginning tomorrow and will be back in the office on March 17th.

Thanks,
Mike

Michael J. Chenette, P.E.
Structures Section
Vermont Agency of Transportation
One National Life Drive
Montpelier, Vermont 05633-5001
michael.chenette@state.vt.us
PH 802-828-5367

From: Burbank, Scott [mailto:SBurbank@VHB.com]
Sent: Wednesday, March 05, 2014 5:36 PM
To: Chenette, Michael
Cc: mike.chenette@stantec.com; Sumner, Todd
Subject: Brattleboro BRO 1442(35) - Ladder Truck Turning Movements

Hi Mike,

Based on the attached information provided by Michael Bucossi, Town of Brattleboro Fire Chief, we developed a model of the Brattleboro Ladder Truck in AutoTurn which we "drove" through the detour using the AutoTurn program. As noted in the attached PDF the Brattleboro Ladder Truck is capable of maneuvering through the detour.

Please feel free to contact us if you have any questions.

Thanks,
Scott

Scott E. Burbank, P.E.
Project Manager

VHB | Vanasse Hangen Brustlin, Inc.
Transportation | Land Development | Environmental Services

7056 US Route 7
Post Office Box 120
North Ferrisburgh, VT 05473
Direct Line: 802.497.6157 | Fax: 802.425.7799
Mobile: 802.324.3055
sburbank@vhb.com

www.vhb.com

This communication and any attachments to this are confidential and intended only for the recipient(s). Any other use, dissemination, copying, or disclosure of this communication is strictly prohibited. If you have received this communication in error, please notify us and destroy it immediately. Vanasse Hangen Brustlin, Inc. is not responsible for any undetectable alteration, virus, transmission error, conversion, media degradation, software error, or interference with this transmission or attachments to this transmission.
Vanasse Hangen Brustlin, Inc. | info@vhb.com

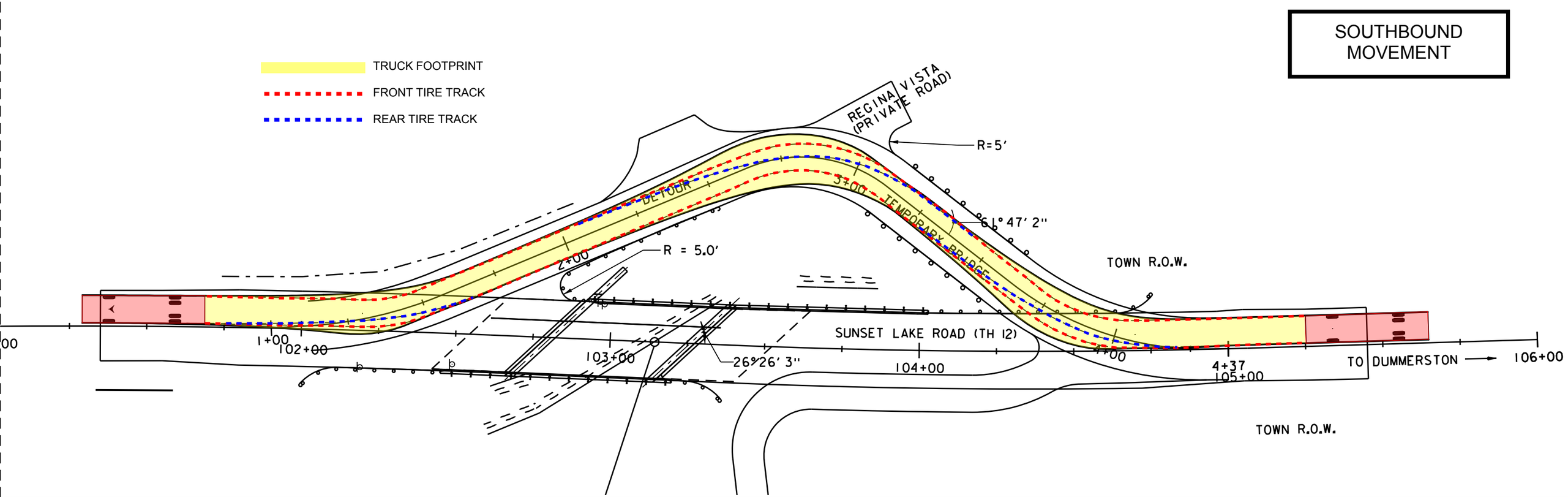
SOUTHBOUND MOVEMENT
TRUCK FOOTPRINT
FRONT TIRE TRACK
REAR TIRE TRACK
REGINA VISTA (PRIVATE ROAD)
R=5'
61° 47' 2"
TEMPORARY BRIDGE
DETOUR
3+00
2+00
R = 5.0'
TOWN R.O.W.
SUNSET LAKE ROAD (TH 12)
1+00
102+00
103+00
26° 26' 3"
104+00
4+00
4+37
105+00
TO DUMMERSTON
106+00
TOWN R.O.W.

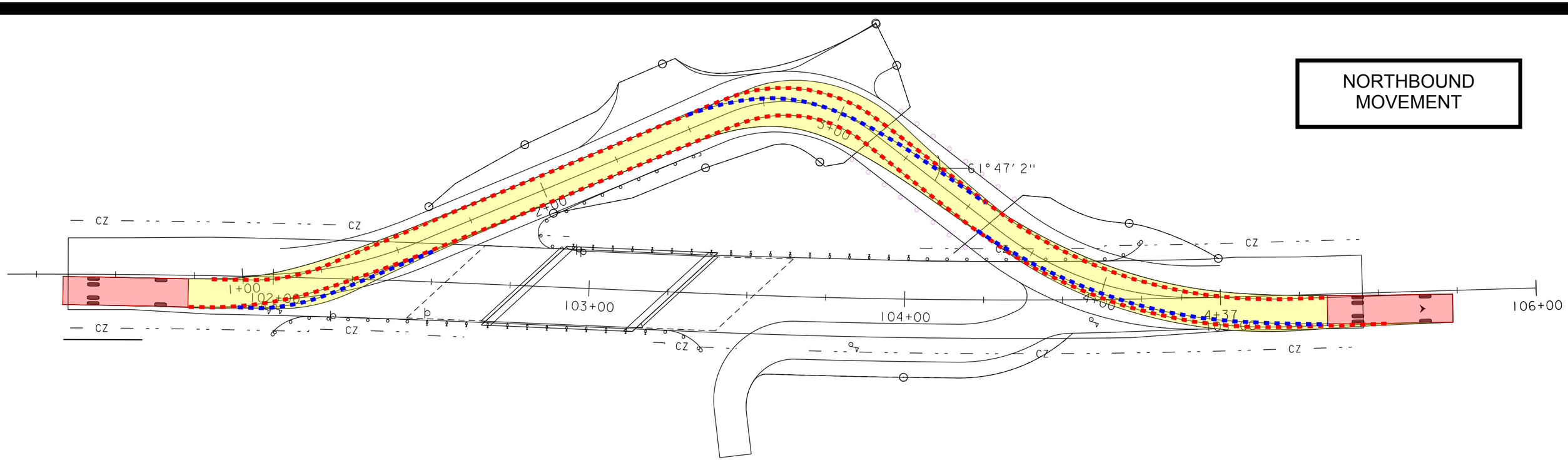
NORTHBOUND MOVEMENT
3+00
61° 47' 2"
2+00
CZ
1+00
102+00
103+00
104+00
4+00
4+37
106+00

BRATTLEBORO FIRE DEPT.

RE DEPT.

KEEP BACK 500 FT

SCHOOL BUS
05/02/2014

05/01/2014

EMPTY
DO NOT PASS WHEN
SIGNALS FLASHING
GAL 467
05/02/2014

PASS WHEN
FLASHING
TB5
THIS VEHICLE STOPS AT
ALL RAILWAY CROSSINGS
THIS VEHICLE
DOES NOT
TURN ON RED
05/02/2014

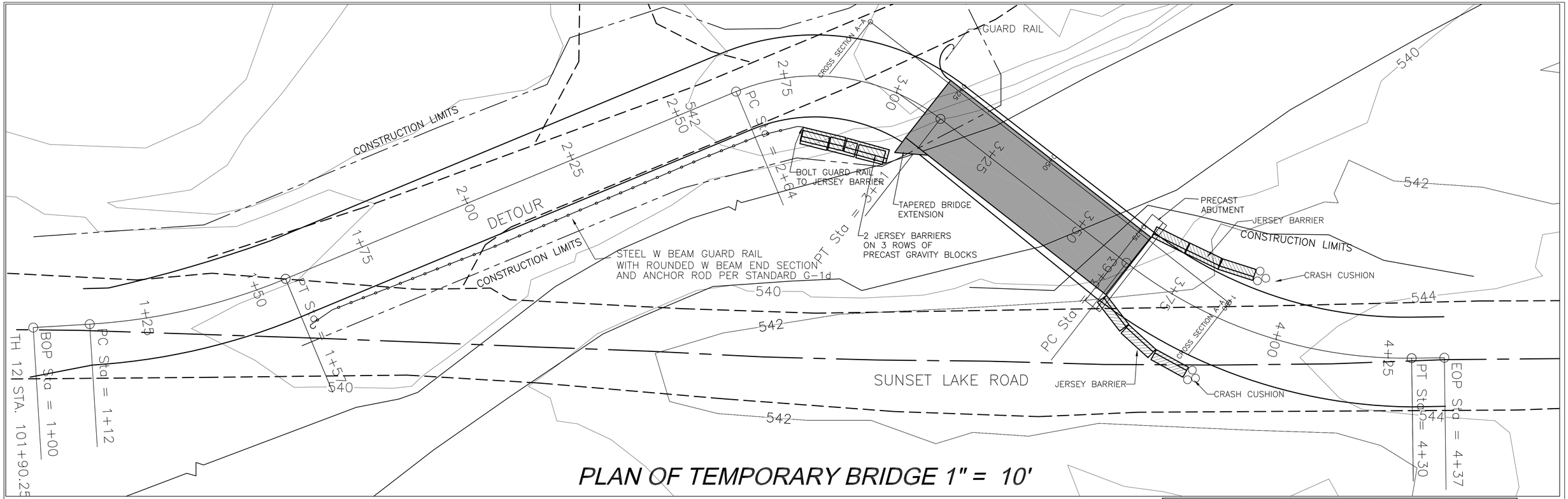

PLAN OF TEMPORARY BRIDGE 1" = 10'

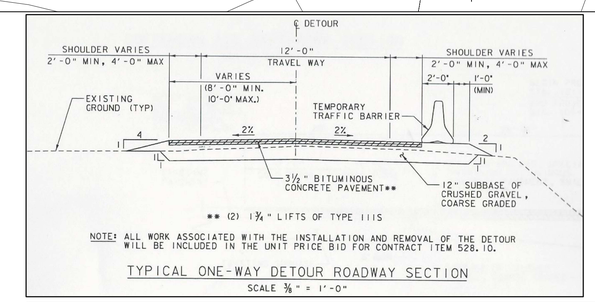

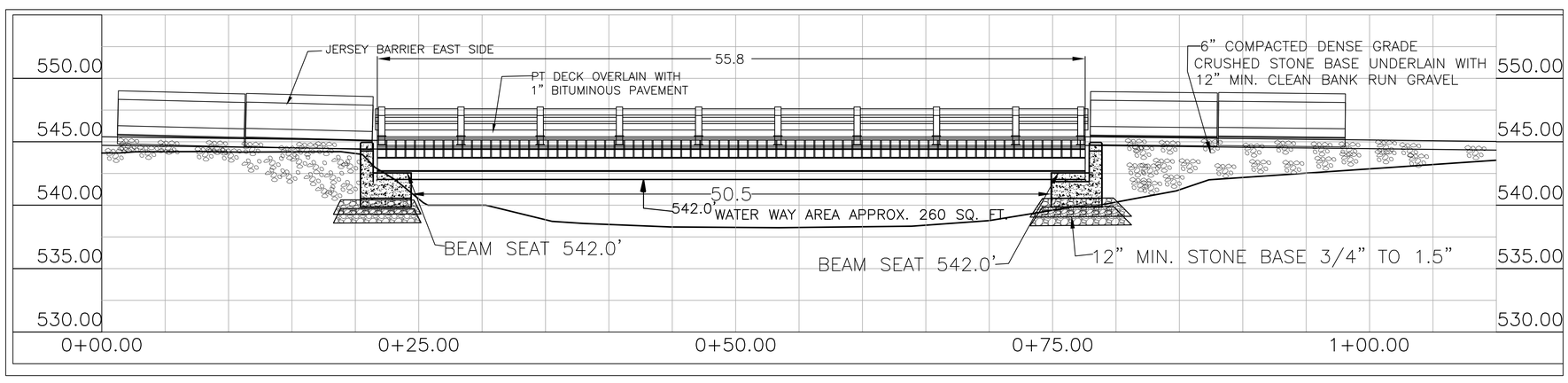

PROFILE OF TEMPORARY BRIDGE 1" =5'
SECTION A-A

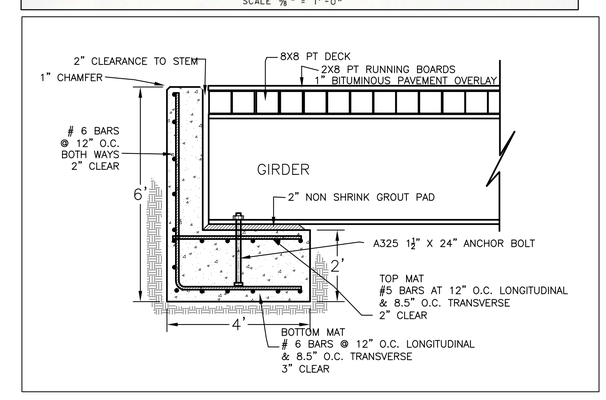

ABUTMENT CROSS SECTION 1" = 2'

STATE OF VERMONT
RONALD K. BELL
No. 6994
REGISTERED PROFESSIONAL ENGINEER

PLAN AND PROFILE OF TEMPORARY BRIDGE, ABUTMENTS & BYPASS ROAD

RENAUD BROS. INC.
BR0 1444 (35)
SUNSET LAKE ROAD
BRATTLEBORO, VT

DATE: 3-2-2014	
AMENDED: 5-08-2014	
AMENDED: 5-05-2014	

BELL ENGINEERING
CIVIL & ENVIRONMENTAL
17 ECHO COVE WAY-SPOFFORD, NH 03462
(603) 363-9966

SHEET
1

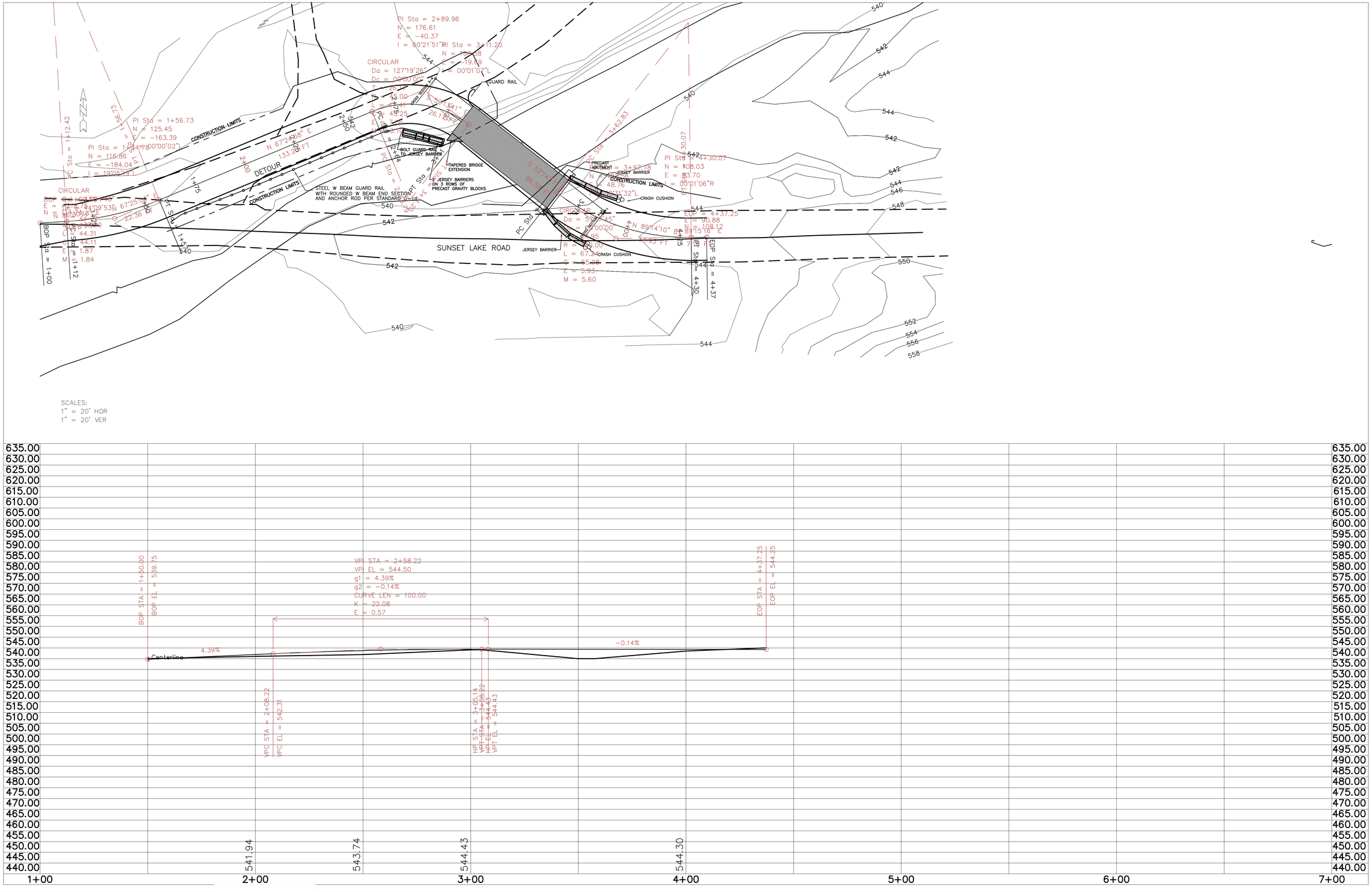

STATE OF VERMONT
RONALD K. BELL
No. 6994
REGISTERED
PROFESSIONAL ENGINEER

Ronald K. Bell

PLAN AND PROFILE

RENAUD BROS. INC.
BRO 1442 (35)
SUNSET LAKE ROAD
BRATTLEBORO, VT

DATE: 3-3-2014	
AMENDED: 5-15-2014	

BELL ENGINEERING
CIVIL & ENVIRONMENTAL
17 ECHO COVE WAY-SPOFFORD, NH 03462
(603) 363-9966

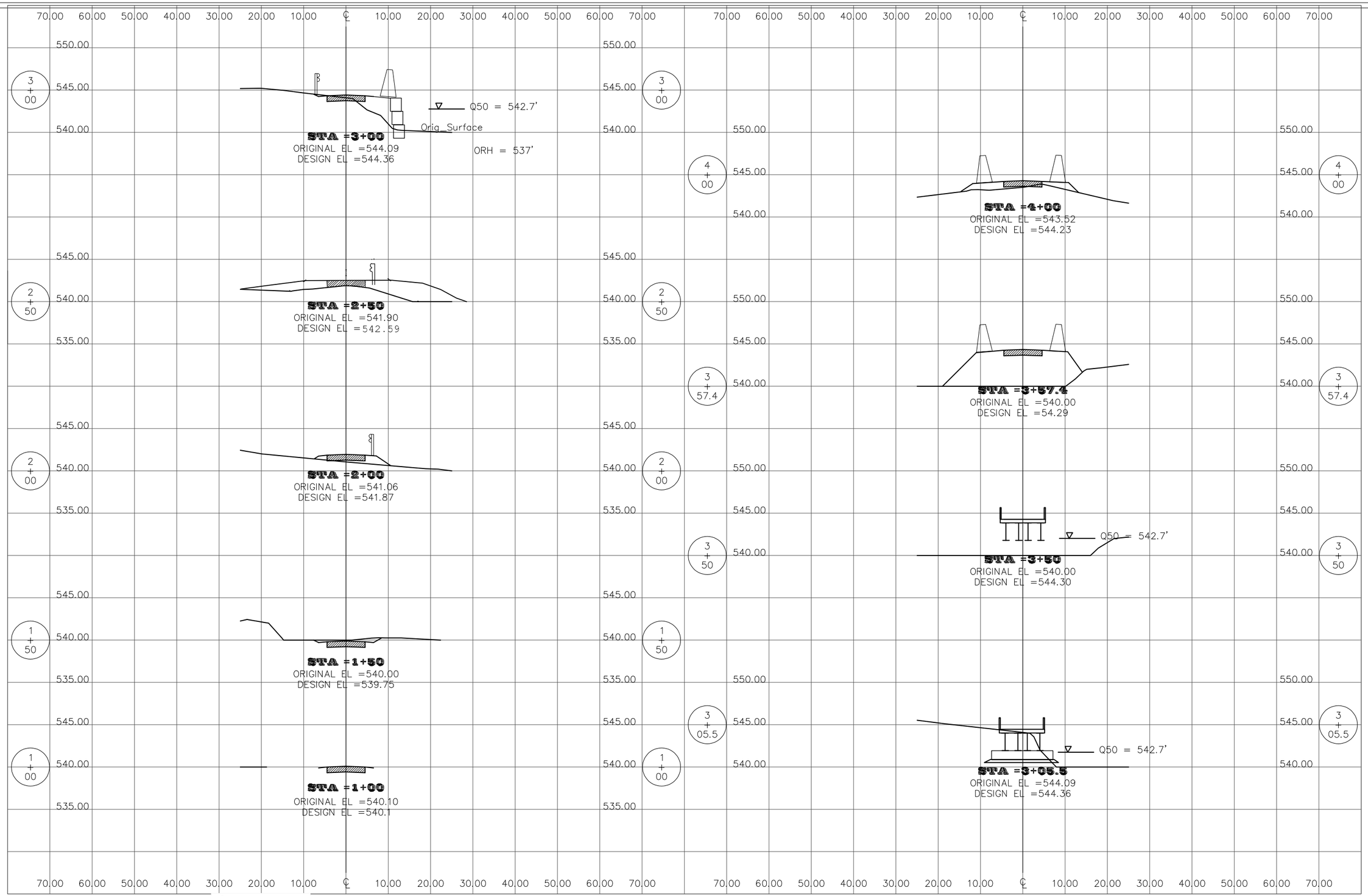

CROSS SECTIONS

RENAUD BROS. INC.
BRO 1442 (35)
SUNSET LAKE ROAD
BRATTLEBORO, VT

DATE: 3-3-2014
AMENDED: 5-15-2014

BELL ENGINEERING
CIVIL & ENVIRONMENTAL
17 ECHO COVE WAY SPOFFORD, NH 03462
(603) 363-9966

3

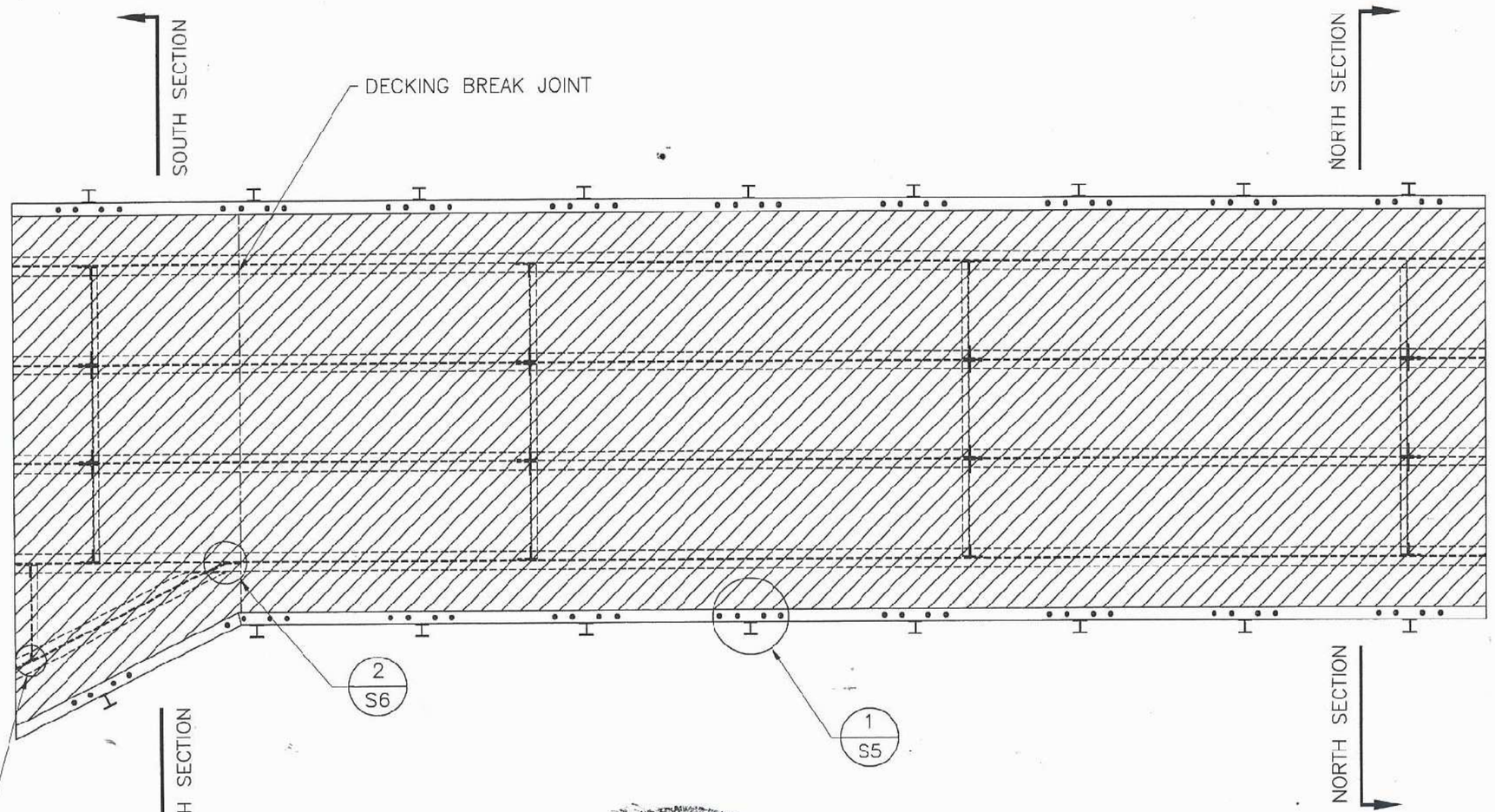

STATE OF VERMONT
RONALD K. BIRT
No. 6994
REGISTERED
PROFESSIONAL ENGINEER

DO NOT SCALE DRAWINGS

REV.		
NO.	DATE	COMMENTS
1	5/5/14	WIDEN APPROACH

DATE:	1/31/14
DRAWN BY:	A.D.
CHK'D BY:	C.E.

JOB NAME:	BRATTLEBORO
JOB NO:	BRO 1442(35)
SHEET NAME:	RAIL ATTACHMENT DETAIL

RENAUD BROS. INC.

SHEET: 1 OF 6

C:\Users\Acunkee\Documents\Works In Progress 2014\BRATTLEBORO BRO 1442(35)\SAGE HILL TEMP BRIDGE.dwg, 5/5/2014 3:09:07 PM

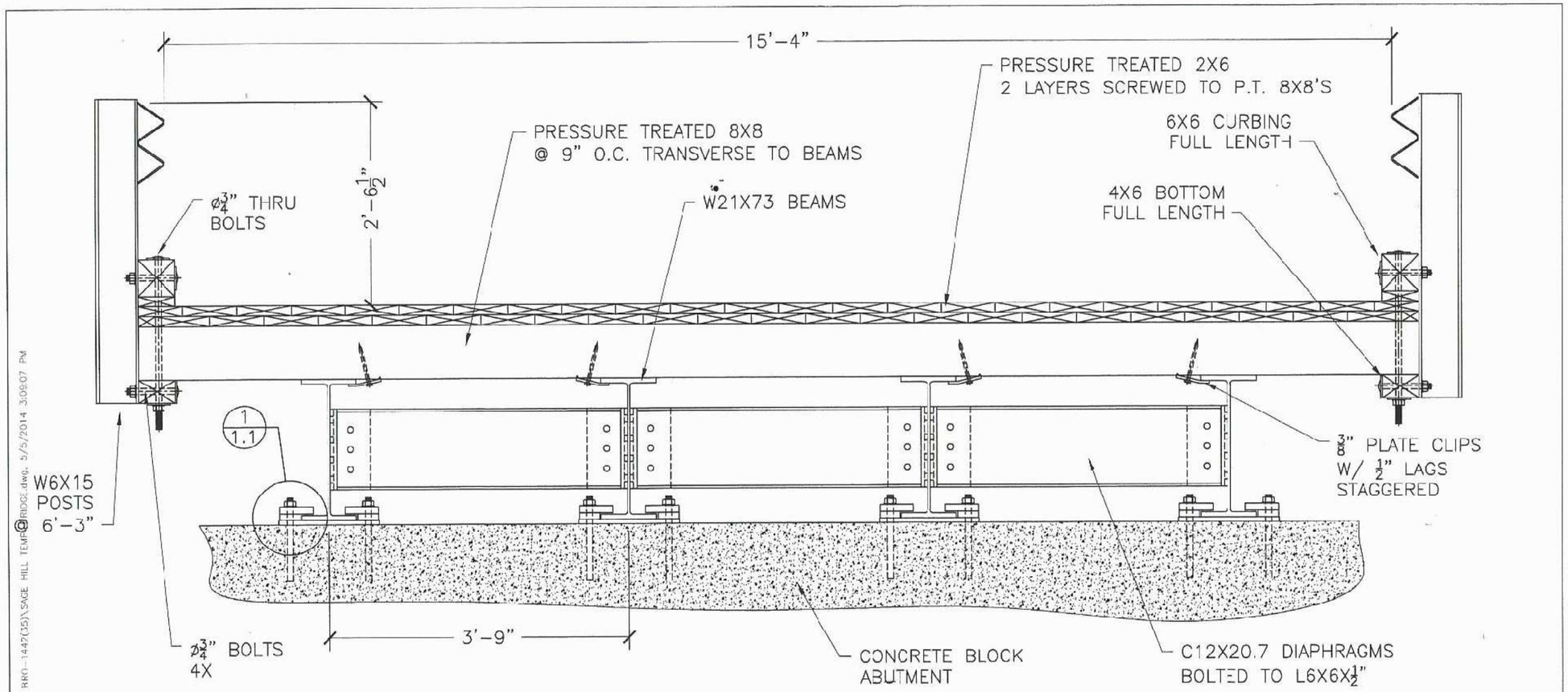

TEMPORARY BRIDGE NORTH ELEVATION

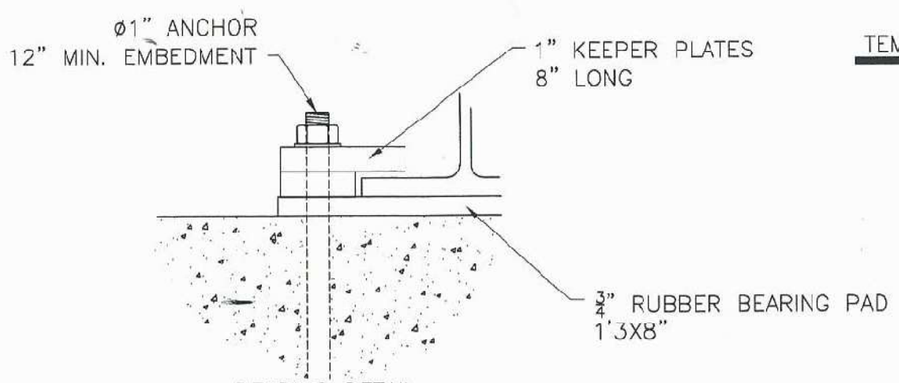

BEARING DETAIL

STATE OF VERMONT
RONALD K. BELL
No. 6904
REGISTERED
PROFESSIONAL ENGINEER

DO NOT SCALE DRAWINGS

REV.		
NO.	DATE	COMMENTS
1	5/5/14	WIDEN APPROACH

DATE:	/31/14
DRAWN BY:	A.D.
CHK'D BY:	C.E.

JOB NAME:	BRATTLEBORO
JCB NO:	BRC 1442(35)
SHEET NAME:	TEMP BRIDGE ELEVATION

RENALD BROS., INC.

SHEET: 2 OF 6

C:\Users\ADunklee\Documents\Works In Progress 2014\BRATTLEBORO BRO-1442(35)\SAGE HILL TEMP@BRIDGE.dwg, 5/5/2014 3:09:07 PM

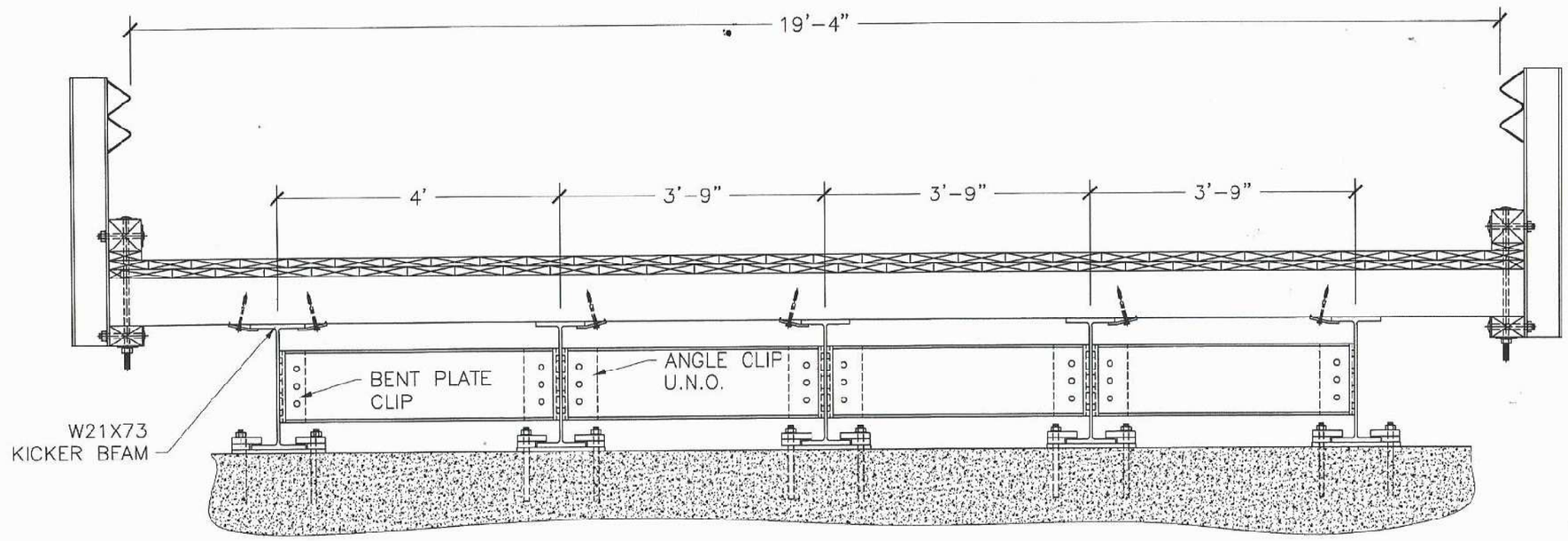

TEMPORARY BRIDGE SOUTH ELEVATION

DO NOT SCALE DRAWINGS

REV.		
NO.	DATE	COMMENTS
1	5/5/14	WIDEN APPROACH

DATE:	1/31/14
DRAWN BY:	A.D.
CHK'D BY:	C.E.

JOB NAME:	BRATTLEBORO
JCB NO:	BRC 1442(35)
SHEET NAME:	RAIL ATTACHMENT DETAIL

RENAUD BROS., INC.

SHEET: 3 OF 6

C:\Users\ADunklee\Documents\Works In Progress 2014\BRATTLEBORO BRO-1442(35)\SAGE HILL TEMP BRIDGE.dwg, 5/5/2014 3:09:08 PM

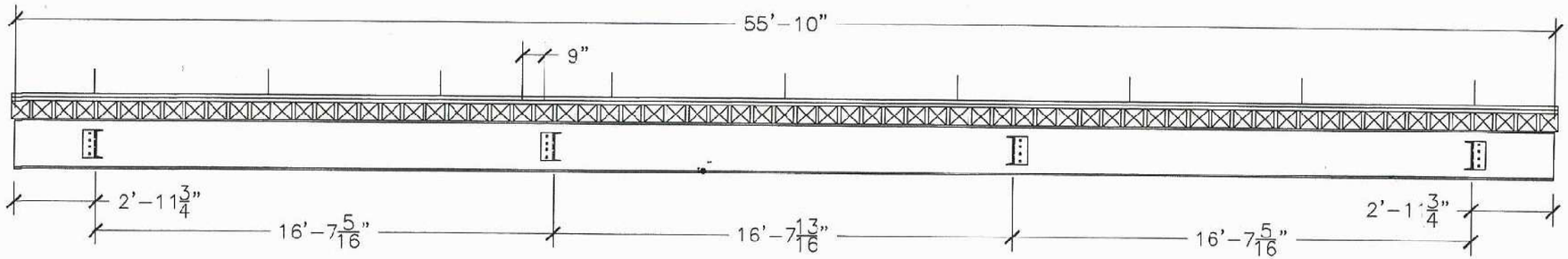

BRIDGE UPSTREAM ELEVATION

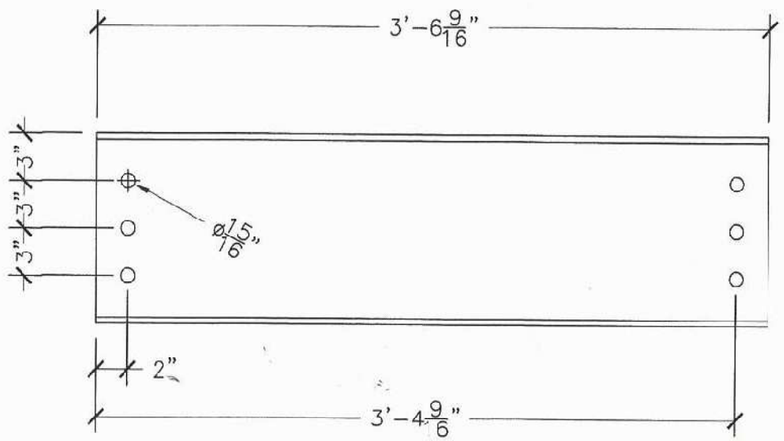

DIAPHRAGMS- 12 REQ.
MAT'L: C12X20.7

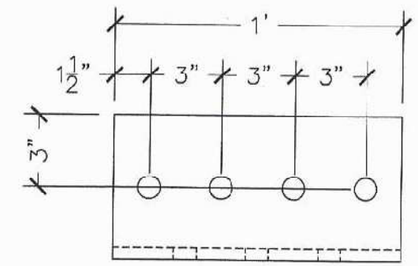

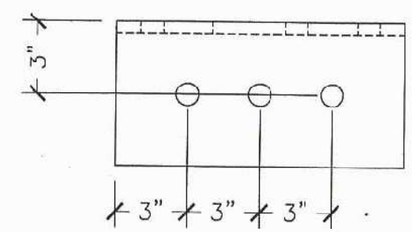

ANGLE CLIPS- 24 REQ.
MAT'L: L6X6X1/2"

STATE OF VERMONT
RONALD K. BELL
No. 6994
REGISTERED
PROFESSIONAL ENGINEER

DO NOT SCALE DRAWINGS

		REV.		
		NO.	DATE	COMMENTS
		1	5/5/14	WIDEN APPROACH
DATE:	1/31/14			
DRAWN BY:	A.D.			
CHK'D BY:	C.E.			

JOB NAME:	BRATTLEBORO
JOB NO:	BRO 1442(35)
SHEET NAME:	SIDE ELEVATION

RENALD BROS. INC.

SHEET: 4 OF 6

C:\Users\ADunklee\Documents\Works In Progress 2014\BRATTLEBORO BRO 1142(35)\SAGE HILL TEMP BRIDGE.dwg, 5/5/2014 3:09:08 PM

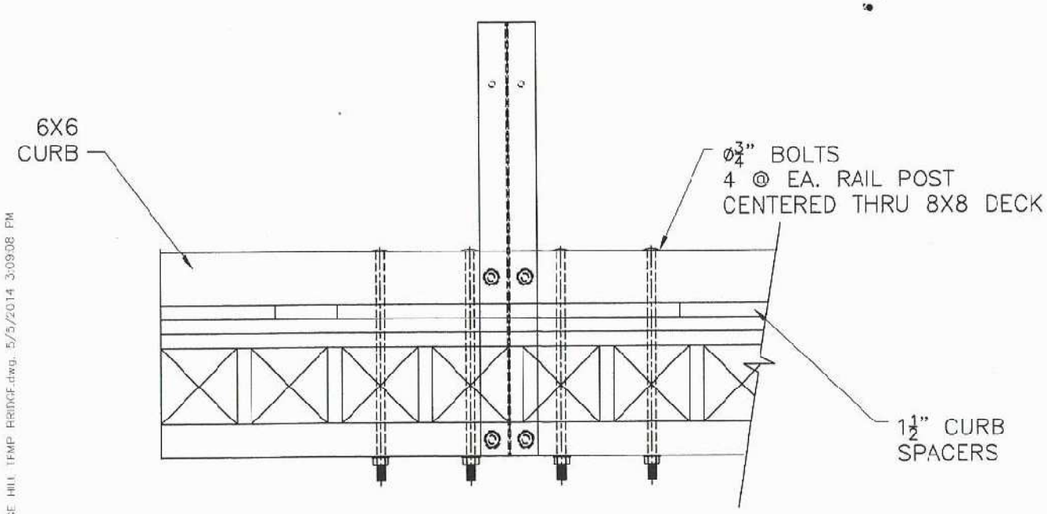

1 / S5 RAILING POST ATTACHMENT DETAIL

N.T.S.

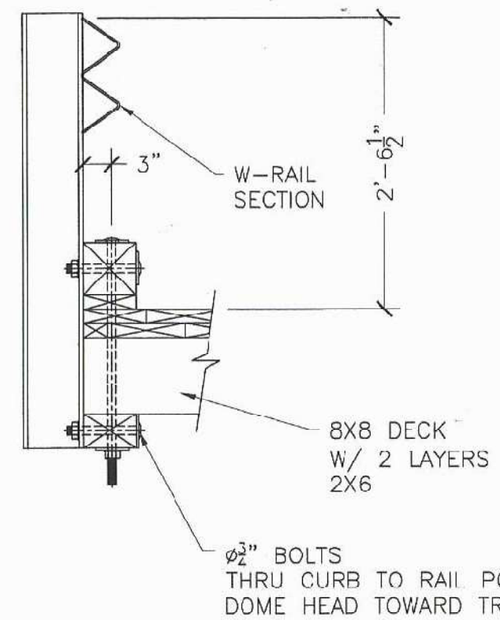

RAILING POST ATTACHMENT DETAIL

N.T.S.

STATE OF VERMONT
RONALD K. BELL
No. 6894
REGISTERED
PROFESSIONAL ENGINEER

DO NOT SCALE DRAWINGS

DATE:	1/31/14
DRAWN BY:	A.D.
CHK'D BY:	C.E.

REV. NO.	DATE	COMMENTS
1	5/5/14	WIDEN APPROACH

JOB NAME:	BRATTLEBORO
JOB NO:	BRO 1442(35)
SHEET NAME:	RAIL ATTACHMENT DETAIL

B. RENAUD BROS., INC.

SHEET: 5 OF 6

C:\Users\ADunklee\Documents\Works In Progress 2014\BRATTLEBORO BRO-1442(35)\SAGE HILL TEMP BRIDGE.dwg, 5/5/2014 3:09:08 PM

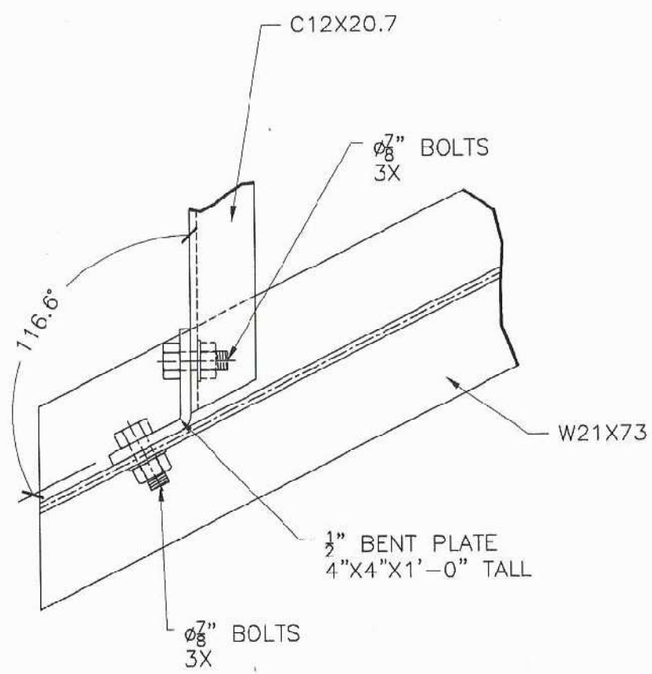

1 / S6 KICKER BEAM TO DIAPHRAGM DETAIL
TOP FLANGE REMOVED FOR CLARITY

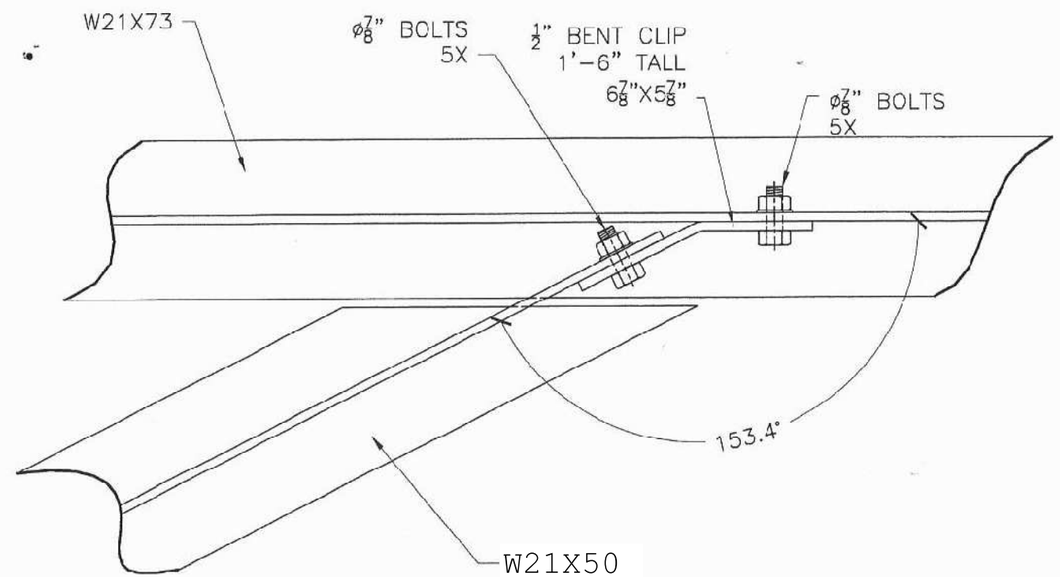

2 / S6 BEAM TO KICKER BEAM DETAIL
TOP FLANGE REMOVED FOR CLARITY

STATE OF VERMONT
RONALD K. BELL
No. 8934
PROFESSIONAL ENGINEER

DO NOT SCALE DRAWINGS

		REV.		
		NO.	DATE	COMMENTS
		1	5/5/14	WIDEN APPROACH
DATE:	1/31/14			
DRAWN BY:	A.D.			
CHK'D BY:	C.E.			

JOB NAME:	BRATTLEBORO
JOB NO:	BRO 1442(35)
SHEET NAME:	RAIL ATTACHMENT DETAIL

RENAUD BROS. INC.

SHEET: 6 OF 6

C:\Users\ADunklee\Documents\Works In Progress 2014\BRATTLEBORO BRO-1442(35)\SAGE HILL TEMP BRIDGE.dwg, 5/5/2014 3:09:09 PM

BELL ENGINEERING
CIVIL & ENVIRONMENTAL
17 ECHO COVE WAY
SPOFFORD, NEW HAMPSHIRE 03462
(603) 363-9966

PROJECT NAME/ LOCATION: Brattleboro 1442 (35)
SHEET #: 1 OF 9
CALCULATED BY: Ron Bell DATE: 4-14-2014
CHECKED BY: DATE:
SCALE:

Temporary Bridge Calculations

Design = HL93

Design Load : Large of :

Design Truck

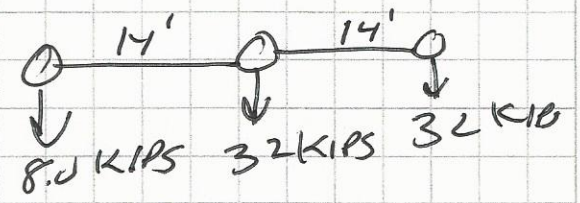

OR

DESIGN Tanden

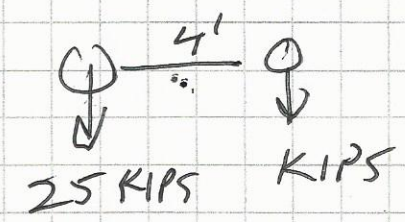

+

DESIGN LANE LOAD OF 0.640 KLF DISTRIBUTED OVER 10'

TO CHECK GOVERNING VEHICLE:
(USED ONLY FULL POINT LOAD OF VEHICLE
TRUCK LOA = 657.7 K-ft
WITH WHEELS @ 7.7, 21.3 + 35.3'

FOR TANDUM
M = 600 K-ft
WITH WHEELS @ 24' + 28'

∴ DESIGN TRUCK GOVERNS

LOAD DISTRIBUTION

Vtrans temp modition

UNIFORM LANE LOAD = $S/10 = \frac{3.75}{10} = 0.375 \times 0.9 \times 0.64 = 0.216$ KLF

WHEE LOAD MOMENTS:

FROM Table 4.6.2.2.2d-1 USE LEVER RULE
FOR EXTERIOR BEAMS

STATE OF VERMONT
RONALD K BELL
NO 6684
PROFESSIONAL ENGINEER

BELL ENGINEERING
CIVIL & ENVIRONMENTAL
17 ECHO COVE WAY
SPOFFORD, NEW HAMPSHIRE 03462
(603) 363-9966

PROJECT NAME/ LOCATION: Brattleboro 1442(35)
SHEET #: 2 OF 9
CALCULATED BY: Ron Bell DATE: 4-14-2014
CHECKED BY: DATE:
SCALE:

DISTRIBUTION ON EXTERIOR BEAMS

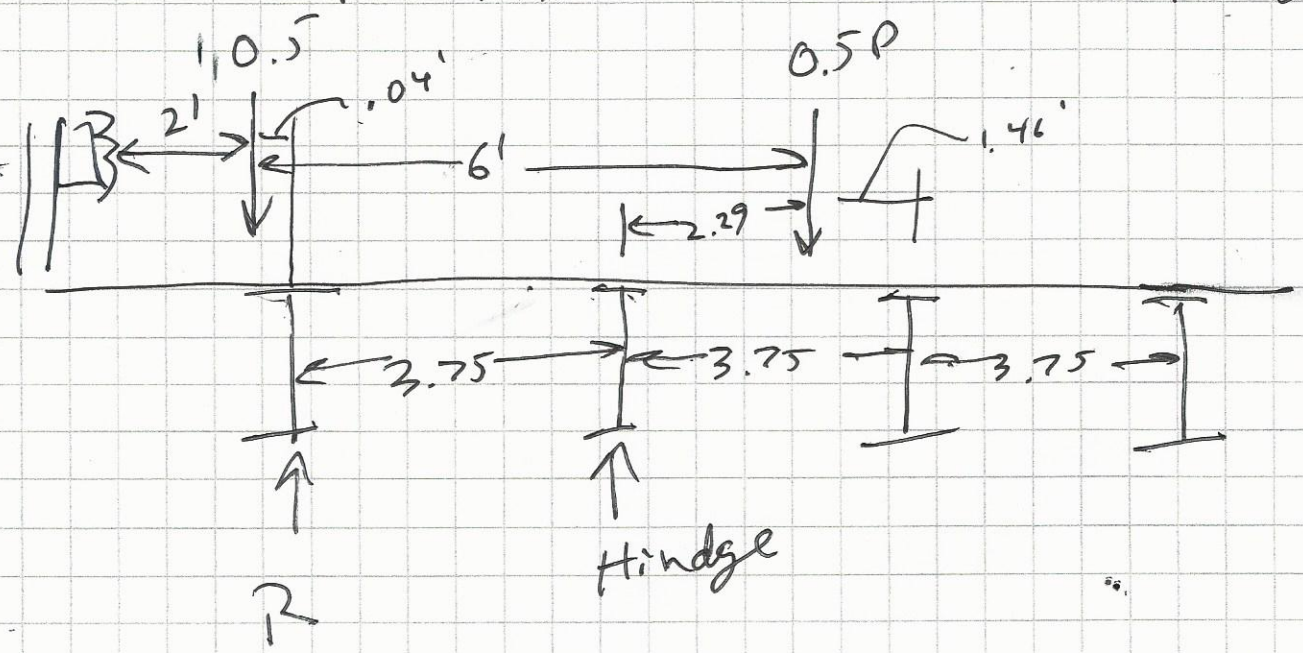

$$M_{HINDG} = (-2.29)(0.5P) + (3.79)(0.5P) - (3.75)(R) = 0$$

$$R = 0.2P$$

DISTRIBUTION ON INTERIOR BEAMS:
FROM Table 4.6.2.2.2-1 DISTRIBUTION FOR
PLANK DECK = S/6.7 = $\frac{3.75}{6.7}$ = 0.56
↑
ON WHEEL LOAD

$$\frac{0.56}{2 \text{ wheels}} = 0.28\,P$$

STATE OF VERMONT
RONALD K. BELL
NO 8684
PROFESSIONAL ENGINEER

BELL ENGINEERING
CIVIL & ENVIRONMENTAL
17 ECHO COVE WAY
SPOFFORD, NEW HAMPSHIRE 03462
(603) 363-9966

PROJECT NAME/ LOCATION: Brattleboro 1442(35)
SHEET #: 3 OF 9
CALCULATED BY: Ron Bell DATE: 4-14-2014
CHECKED BY: DATE:
SCALE:

LOAD CALC. CONT.

DYNAMIC LOAD ALLOWANCE = 1.33

VTrans Temp Bridge Load Modifier = 0.9

FACTORS FOR STRENGTH I CASE:

LL = 1.75
IM = 1.75
DL = 1.25

DEAD LOAD = 185 #/ft

Applied Wheel loads = DF (0.256) x IM (1.33) x 0.9 = 0.34P

8 KIPS x 0.34 = 2.72 KIPS FRONT WHEELS

32 KIPS x 0.34 = 10.88 KIPS REAR WHEELS

STATE OF VERMONT
RONALD K. BELL
NO 6304
PROFESSIONAL ENGINEER

BELL ENGINEERING
CIVIL & ENVIRONMENTAL
17 ECHO COVE WAY
SPOFFORD, NEW HAMPSHIRE 03462
(603) 363-9966

PROJECT NAME/ LOCATION: Brattleboro 1442(35)
SHEET #: 4 OF 9
CALCULATED BY: Ron Bell DATE: 4-14-2014
CHECKED BY: DATE:
SCALE:

CHECK MAX. BENDING + SHEAR STRESS RATIOS;
FROM ENERCALC

BELL ENGINEERING
CIVIL & ENVIRONMENTAL
17 ECHO COVE WAY-SPOFFORD, NH 03462
(603) 363-9966

Project Title: BRO 1442 135
Engineer: RON BELL
Project Descr: TEMPORARY BRIDGE
Project ID: 2014-32

Printed: 14 APR 2014, 8:57AM

Steel Beam

File = C:\Users\Ron\DOCUME~1\ENERCA~1\SUC4E3~1.EC6
ENERCALC, INC. 1983-2013, Build:6.13.8.31, Ver:6.13.12.31

Lic. # : KW-06009396 Licensee : Bell Engineering

Description : --None--

CODE REFERENCES

Calculations per AISC 360-05, IBC 2006, CBC 2007, ASCE 7-05
Load Combination Set : ASCE 7-05

Material Properties

Analysis Method : Load Resistance Factor Design
Beam Bracing : Beam is Fully Braced against lateral-torsional buckling
Bending Axis : Major Axis Bending
Load Combination ASCE 7-05

Fy : Steel Yield : 50.0 ksi
E: Modulus : 29,000.0 ksi

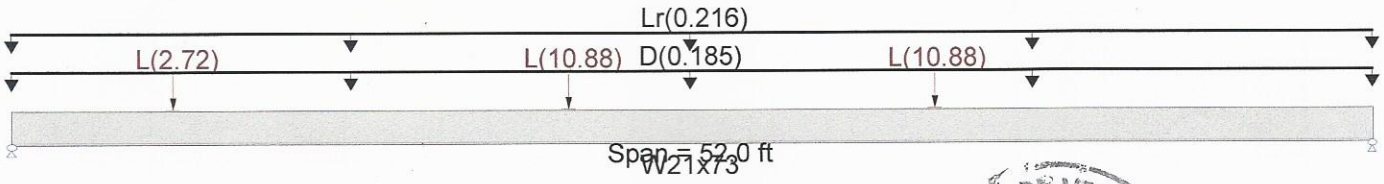

Applied Loads

Service loads entered. Load Factors will be applied for calculations.

Load(s) for Span Number 1
Point Load : L = 2.720 k @ 6.20 ft
Point Load : L = 10.880 k @ 21.30 ft
Point Load : L = 10.880 k @ 35.30 ft
Uniform Load : D = 0.1850 k/ft, Tributary Width = 1.0 ft
Uniform Load : Lr = 0.2160 k/ft, Tributary Width = 1.0 ft

STATE OF VERMONT RONALD R. BELL NO 6884 PROFESSIONAL ENGINEER

DESIGN SUMMARY

Design OK

Maximum Bending Stress Ratio =	0.898 : 1	Maximum Shear Stress Ratio =	0.127 : 1
Section used for this span	W21x73	Section used for this span	W21x73
Mu : Applied	578.951 k-ft	Vu : Applied	36.787 k
Mn * Phi : Allowable	645.000 k-ft	Vn * Phi : Allowable	289.380 k
Load Combination	+1.125D+1.750Lr+1.750L	Load Combination	+1.125D+1.750Lr+1.750L
Location of maximum on span	22.100 ft	Location of maximum on span	0.000 ft
Span # where maximum occurs	Span # 1	Span # where maximum occurs	Span # 1

BELL ENGINEERING
CIVIL & ENVIRONMENTAL
17 ECHO COVE WAY-SPOFFORD, NH 03462
(603) 363-9966

Project Title: BRO 1442 135
Engineer: RON BELL
Project Descr: TEMPORARY BRIDGE

Project ID: 2014-32

DEFLECTION CALCS

5/9

Printed: 14 APR 2014, 8:55AM

Steel Beam

File = c:\Users\Ron\DOCUME~1\ENERCA~1\SUB031~1.EC6
ENERCALC, INC. 1983-2013, Build:6.13.8.31, Ver:6.13.12.31

Lic. # : KW-06009396 — Licensee : Bell Engineering

Description : --None--

NOTE: DEFLECTION DISTRIBUTED EQUALLY OVER ALL BEAMS. UNIFORM LANE LOAD NOT INCLUDED.

CODE REFERENCES

Calculations per AISC 360-05, IBC 2006, CBC 2007, ASCE 7-05
Load Combination Set : ASCE 7-05

STATE OF VERMONT RONALD K. BELL NO 9664 PROFESSIONAL ENGINEER

Material Properties

Analysis Method : Load Resistance Factor Design
Beam Bracing : Beam is Fully Braced against lateral-torsional buckling
Bending Axis : Major Axis Bending
Load Combination ASCE 7-05

Fy : Steel Yield : 50.0 ksi
E: Modulus : 29,000.0 ksi

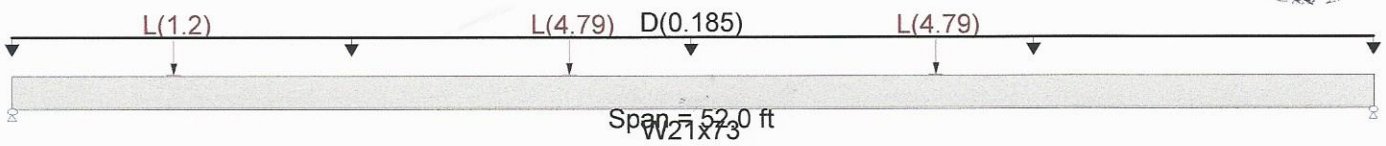

Applied Loads

Service loads entered. Load Factors will be applied for calculations.

Load(s) for Span Number 1
- Point Load : L = 1.20 k @ 6.20 ft
- Point Load : L = 4.790 k @ 21.30 ft
- Point Load : L = 4.790 k @ 35.30 ft
- Uniform Load : D = 0.1850 k/ft, Tributary Width = 1.0 ft

DESIGN SUMMARY

Design OK

Maximum Bending Stress Ratio =	0.370 : 1	Maximum Shear Stress Ratio =	0.051 : 1
Section used for this span	W21x73	Section used for this span	W21x73
Mu : Applied	238.487 k-ft	Vu : Applied	14.902 k
Mn * Phi : Allowable	645.000 k-ft	Vn * Phi : Allowable	289.380 k
Load Combination	+1.125D+1.750Lr+1.750L	Load Combination	+1.125D+1.750Lr+1.750L
Location of maximum on span	21.320 ft	Location of maximum on span	0.000 ft
Span # where maximum occurs	Span # 1	Span # where maximum occurs	Span # 1

Maximum Deflection

Max Downward L+Lr+S Deflection	0.986 in	Ratio =	632
Max Upward L+Lr+S Deflection	0.000 in	Ratio =	0 <180
Max Downward Total Deflection	1.647 in	Ratio =	379
Max Upward Total Deflection	0.000 in	Ratio =	0 <160

Overall Maximum Deflections - Unfactored Loads

Load Combination	Span	Max. "-" Defl	Location in Span	Load Combination	Max. "+" Defl	Location in Span
D+L	1	1.6474	26.260		0.0000	0.000

Vertical Reactions - Unfactored

Support notation : Far left is #1 — Values in KIPS

Load Combination	Support 1	Support 2
Overall MAXimum	10.233	10.167
D Only	4.810	4.810
L Only	5.423	5.357
D+L	10.233	10.167

Steel Section Properties : W21x73

Depth	=	21.200	in	I xx	=	1,600.00	in^4	J	= 3.020 in^4
Web Thick	=	0.455	in	S xx		151.00	in^3	Cw	= 7,410.00 in^6
Flange Width	=	8.300	in	R xx	=	8.640	in		
Flange Thick	=	0.740	in	Zx	=	172.000	in^3		
Area	=	21.500	in^2	I yy	=	70.600	in^4		
Weight	=	73.186	plf	S yy	=	17.000	in^3	Wno	= 42.500 in^2
Kdesign	=	1.240	in	R yy	=	1.810	in	Sw	= 65.200 in^4
K1	=	0.875	in	Zy	=	26.600	in^3	Qf	= 29.700 in^3
rts	=	2.190	in	rT	=	2.130	in	Qw	= 85.000 in^3
Ycg	=	10.600	in						

BELL ENGINEERING
CIVIL & ENVIRONMENTAL
17 ECHO COVE WAY-SPOFFORD, NH 03462
(603) 363-9966

Project Title: BRO 1442 (35)
Engineer: RON BELL
Project Descr: TIMBER DECK

Project ID: 2014-35

6/9

TIMBER DECK CALCS

Printed: 14 APR 2014, 10:16AM

Wood Beam

File = c:\Users\Ron\DOCUME~1\ENERCA~1\SU9B75~1.EC6
ENERCALC, INC. 1983-2013, Build:6.13.8.31, Ver:6.13.12.31

Lic. # : KW-06009396 — Licensee : Bell Engineering

Description : --None-- Per 4.6.2.1.3 Wp = 7.5"/10"

CODE REFERENCES

Calculations per NDS 2005, IBC 2006, CBC 2007, ASCE 7-05
Load Combination Set : ASCE 7-05

Material Properties

Analysis Method : Load Resistance Factor D
Load Combination ASCE 7-05

Wood Species : Spruce - Pine - Fir (South)
Wood Grade : NO.1

Beam Bracing : Beam is Fully Braced against lateral-torsion buckling

Fb - Tension	1,200.0 psi
Fb - Compr	600.0 psi
Fc - Prll	1,200.0 psi
Fc - Perp	600.0 psi
Fv	105.0 psi
Ft	725.0 psi

E : Modulus of Elasticity

Ebend- xx	1,200.0 ksi
Eminbend - xx	440.0 ksi
Density	23.190 pcf

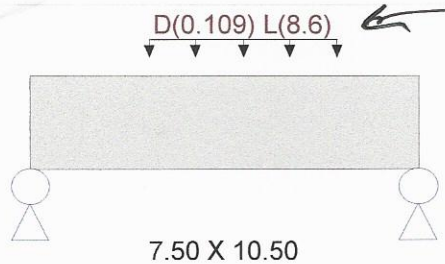

20" patch width

Span = 3.420 ft

Applied Loads

Service loads entered. Load Factors will be applied for calculations.

Load for Span Number 1
Uniform Load : D = 0.1090, L = 8.60 k/ft, Extent = 1.045 -->> 2.705 ft, Tributary Width = 1.0 ft

DESIGN SUMMARY

Design OK

Maximum Bending Stress Ratio	=	0.543 : 1	Maximum Shear Stress Ratio	=	0.958 : 1
Section used for this span		7.50 X 10.50	Section used for this span		7.50 X 10.50
fb : Actual	=	1,408.08 psi	fv : Actual	=	217.34 psi
FB : Allowable	=	2,592.00 psi	Fv : Allowable	=	226.80 psi
Load Combination		+1.250D+1.750L	Load Combination		+1.250D+1.750L
Location of maximum on span	=	1.797 ft	Location of maximum on span	=	2.546 ft
Span # where maximum occurs	=	Span # 1	Span # where maximum occurs	=	Span # 1

Maximum Deflection

Max Downward L+Lr+S Deflection	0.021 in	Ratio =	1944
Max Upward L+Lr+S Deflection	0.000 in	Ratio =	0 <360
Max Downward Total Deflection	0.021 in	Ratio =	1920
Max Upward Total Deflection	0.000 in	Ratio =	0 <180

Overall Maximum Deflections - Unfactored Loads

Load Combination	Span	Max. "-" Defl	Location in Span	Load Combination	Max. "+" Defl	Location in Span
D+L	1.	0.0214	1.747		0.0000	0.000

Vertical Reactions - Unfactored

Support notation : Far left is #1 — Values in KIPS

Load Combination	Support 1	Support 2
Overall MAXimum	6.531	7.926
D Only	0.082	0.099
L Only	6.449	7.827
D+L	6.531	7.926

STATE OF VERMONT
RONALD K. BELL
NO 8894
PROFESSIONAL ENGINEER

BELL ENGINEERING
CIVIL & ENVIRONMENTAL
17 ECHO COVE WAY
SPOFFORD, NEW HAMPSHIRE 03462
(603) 363-9966

PROJECT NAME/ LOCATION: Brattleboro 1442 (3-)
SHEET #: 7 OF 9
CALCULATED BY: Ron Bell DATE: 4-14-2017
CHECKED BY: DATE:
SCALE:

SUB STRUCTURE DESIGN

1 TRUCK = 72 KIPS x 1.75 x 1.33 = 168 KIPS
DECK = 52' x (19/12)(50 #/ft³) x 16' = 35 KIPS
steel beams = 4 x 52' x 73 #/ft = 15 KIPS
} 218 KIPS

CONC. BLOCK FOUNDATION = 38 BLOCKS x 3x2x6 x 150 #/ft³ = 205 KIPS

$P_u = \frac{218 \text{ KIPS}}{2 \text{ sides}} + 205 \text{ KIPS} = 314 \text{ KIPS/SIDE}$

q_u = Factored Load/ft² = $\frac{314 \text{ KIPS}}{252 \text{ ft}^2} = 1.25 \frac{\text{KIPS}}{\text{ft}^2}$

FROM C10.6.2.6.1-1
FOR SW, SP MEDIUM DENSE TO DENSE RECOMMED
BEARING CAPACITY = 6.0 KSF

FOR FOUNDATION RESISTANCE FACTOR = 0.45

6 KSF x 0.45 = 2.7 KSF

2.7 KSF > 1.25 KSF OK

STATE OF VERMONT
RONALD K BELL
NO 8994
PROFESSIONAL ENGINEER

BELL ENGINEERING
CIVIL & ENVIRONMENTAL
17 ECHO COVE WAY
SPOFFORD, NEW HAMPSHIRE 03462
(603) 363-9966

PROJECT NAME/ LOCATION: BRO 1442 (35)
SHEET #: 8 OF 9
CALCULATED BY: Ron Bell DATE: 2-14-2014
CHECKED BY: DATE:
SCALE:

STATE OF VERMONT RONALD K BELL NO 6394 PROFESSIONAL ENGINEER

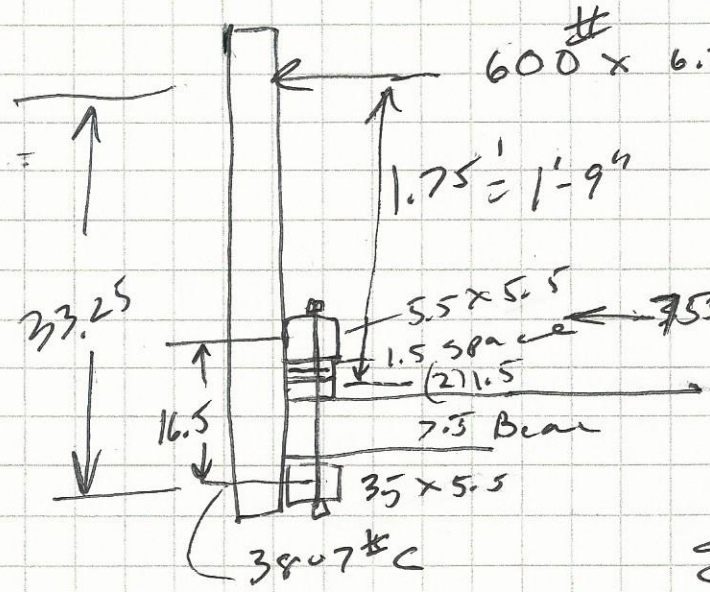

$\Sigma M_{\text{LOWER BOLT}} = (33.25)(3750) - 16.5(X) = 0$

$X = 7557\#$ T TENSION

$\Sigma F_H = 3750 - 7557 = 3807\#$ C COMPRESSION

CHECK SIDE BEARING OF 6X6

3/4" Dia bolt + 1/8 hole = 7/8" x 5.5" x 4 Bolts = 19.25 in²

$\frac{7557\#}{19.25 \text{ in}^2} = 392$ psi

SYP ∥ To Grain $F_c = 525$ psi > 392 psi OK

CHECK TOP TENSION BOLTS:

$\frac{7557\#}{2 \text{ Bolts}} = 3,778\#/\text{bolt}$

Bearing area required $= \frac{3778\#}{525 \text{ psi}} = 7.2 \text{ in}^2$

Provide washer 4"x2"x1/4" 8 in² − 0.5 in² (Hole) = 7.5 in² OK

BELL ENGINEERING
CIVIL & ENVIRONMENTAL
17 ECHO COVE WAY
SPOFFORD, NEW HAMPSHIRE 03462
(603) 363-9966

PROJECT NAME/ LOCATION: BRO 1442 (35)
SHEET #: 9 OF 9
CALCULATED BY: RON BELL DATE: 2-14-2014
CHECKED BY: DATE:
SCALE:

TO PREVENT SIDE BLOWOUT COMPLY ~~WITH~~ WITH MIN. EDGE DISTANCE SET FORTH IN NDS:

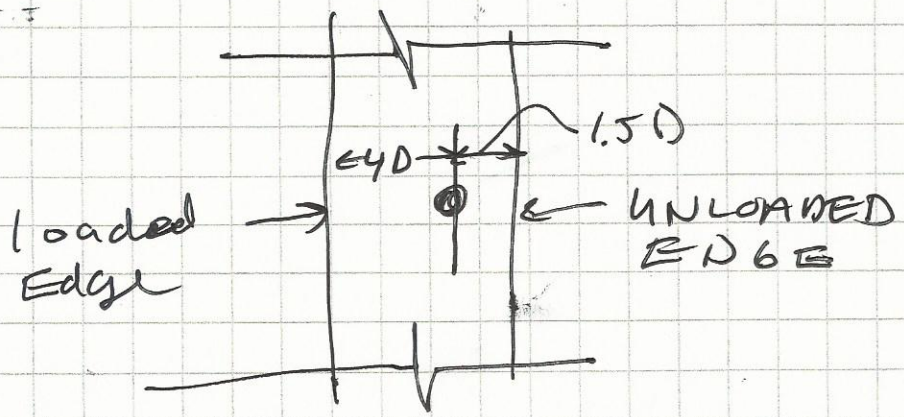

4 x .75" = 3" MIN. EDGE DISTANCE

SUBSTRUCTURE:

BEAMS TO SIT ON (2) ROWS 6x3x2 HIGH CONCRETE BLOCKS - STAGGER JOINTS TO DISTRIBUTE LOADS TO SOIL.

AREA PROVIDED FOR SOIL BEARING BASED ON 3.75' BEAM SPACING = 3.75' x 6' = 22.5 ft2

FACTORED BEAM REACTION = 34 KIPS

$\frac{34}{22.5} = 1.5 \frac{KIPS}{ft2}$ >>> 2000 psf min OF NATIVE SOIL.

STATE OF VERMONT
RONALD K. BELL
NO 6394
PROFESSIONAL ENGINEER

BELL ENGINEERING
CIVIL & ENVIRONMENTAL
17 ECHO COVE WAY
SPOFFORD, NEW HAMPSHIRE 03462
(603) 363-9966

PROJECT NAME/ LOCATION: Brattleboro BRO 1442(35)
SHEET #: 1 OF 2
CALCULATED BY: Ron Bell DATE: 5-6-2014
CHECKED BY: DATE:
SCALE:

CHECK OUTSIDE BEAM FOR ADDITIONAL LOAD DUE TO FLARED ENTRY

FOR WORST CASE DESIGN ASSUME THAT FLARED END PUTS FULL WHEEL LOAD AT 8' FROM END: THE SECOND AND FRONT AXEL LOAD DISTRIBUTIONS ARE @ 0.28P:

Rear wheel load = 16 KIPS x 1.33 x 0.9 = 19.15 KIPS
Center wheel load = (0.28)(32)(1.33)(0.9) = 10.73 KIPS
FRONT wheel load = (0.28)(8)(1.33)(0.9) = 2.68

NOTE: FOR REAR WHEEL TO PUT FULL WGT. ON EXTERIOR BEAM THE WHEEL LOCATION IS APPROX. 4' FROM BRIDGE END (BUT LOAD IS AT 8'). DIAGONAL BEAM ~~WHEEL~~ WILL CARRY 1/2 LOAD TO ABUTMENT. THERE FOR LOAD AT 8' = 19.15/2 = 9.58 KIPS

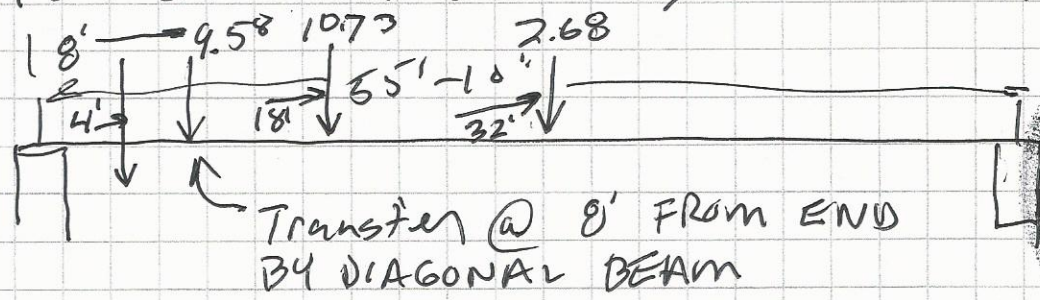

STATE OF VERMONT
RONALD K. BELL
No. 6654
REGISTERED
PROFESSIONAL ENG.

CHECK SHEAR IN BOLTS:

(5) 7/8 A325 BOLTS: ALLOABLE LOAD = 18.0 KIPS (BOLT)
(5)(18) = 90 KIPS >>> 9.58 KIPS OK

BEARING CHECK ON 1/2 PLATE:
(0.6)(50 KSI)(0.5 in)(0.875 in) = 13.12 KIPS/BOLT
OK

BELL ENGINEERING
CIVIL & ENVIRONMENTAL
17 ECHO COVE WAY-SPOFFORD, NH 03462
(603) 363-9966

Project Title: BRO 1442 135
Engineer: RON BELL
Project Descr: TEMPORARY BRIDGE

Project ID: 2014-32

Printed: 6 MAY 2014, 7:47AM

Steel Beam

File = c:\Users\Ron\DOCUME~1\ENERCA~1\SU9384~1.EC6
ENERCALC, INC. 1983-2013, Build:6.13.8.31, Ver:6.13.12.31

Lic. # : KW-06009396 Licensee : Bell Engineering

Description : Splayed approach places 1/2 wheel load at 8' from end of bridge

CODE REFERENCES

Calculations per AISC 360-05, IBC 2006, CBC 2007, ASCE 7-05
Load Combination Set : ASCE 7-05

Material Properties

Analysis Method : Load Resistance Factor Design
Beam Bracing : Beam is Fully Braced against lateral-torsional buckling
Bending Axis : Major Axis Bending
Load Combination ASCE 7-05

Fy : Steel Yield : 50.0 ksi
E: Modulus : 29,000.0 ksi

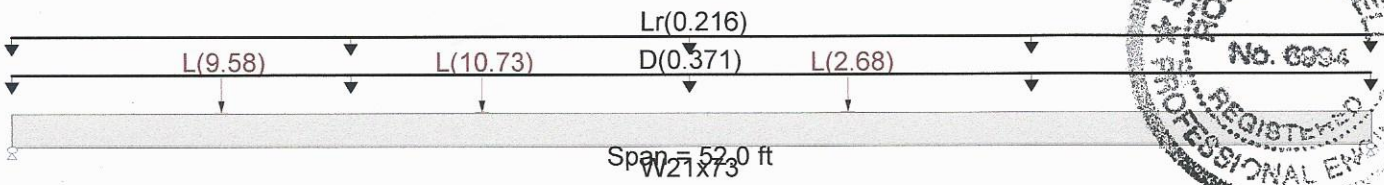

STATE OF VERMONT
RONALD K. BELL
No. 6904
REGISTERED
PROFESSIONAL ENGINEER

Applied Loads

Service loads entered. Load Factors will be applied for calculations.

Load(s) for Span Number 1
Point Load : L = 2.680 k @ 32.0 ft
Point Load : L = 10.730 k @ 18.0 ft
Point Load : L = 9.580 k @ 8.0 ft
Uniform Load : D = 0.3710 k/ft, Tributary Width = 1.0 ft
Uniform Load : Lr = 0.2160 k/ft, Tributary Width = 1.0 ft

DESIGN SUMMARY

Design OK

Maximum Bending Stress Ratio =	0.906 : 1	Maximum Shear Stress Ratio =	0.169 : 1
Section used for this span	W21x73	Section used for this span	W21x73
Mu : Applied	584.346 k-ft	Vu : Applied	48.947 k
Mn * Phi : Allowable	645.000 k-ft	Vn * Phi : Allowable	289.380 k
Load Combination	+1.125D+1.750Lr+1.750L	Load Combination	+1.125D+1.750Lr+1.750L
Location of maximum on span	18.200 ft	Location of maximum on span	0.000 ft
Span # where maximum occurs	Span # 1	Span # where maximum occurs	Span # 1

RENAUD BROS., INC.

283 Fort Bridgeman Road #2, Vernon, VT 05354 **phone (802) 257-7383**
fax (802) 257-7308

Brattlboro BRO 1442 (35)

Temporary Bridge Erection Sequence

1) Set abutments to specified grade

2) Set steel beam superstructure

3) Set 8x8 Pressure Treated deck members

4) Fasten the first layer of 1 ½" Pressure Treated decking at a 45 degree angle to the 8x8 decks

5) Fasten the second layer of 1 ½" Pressure Treated decking at 90 degrees to the first layer of 1 ½" Pressure Treated decking

6) Install bridge rail posts and rail