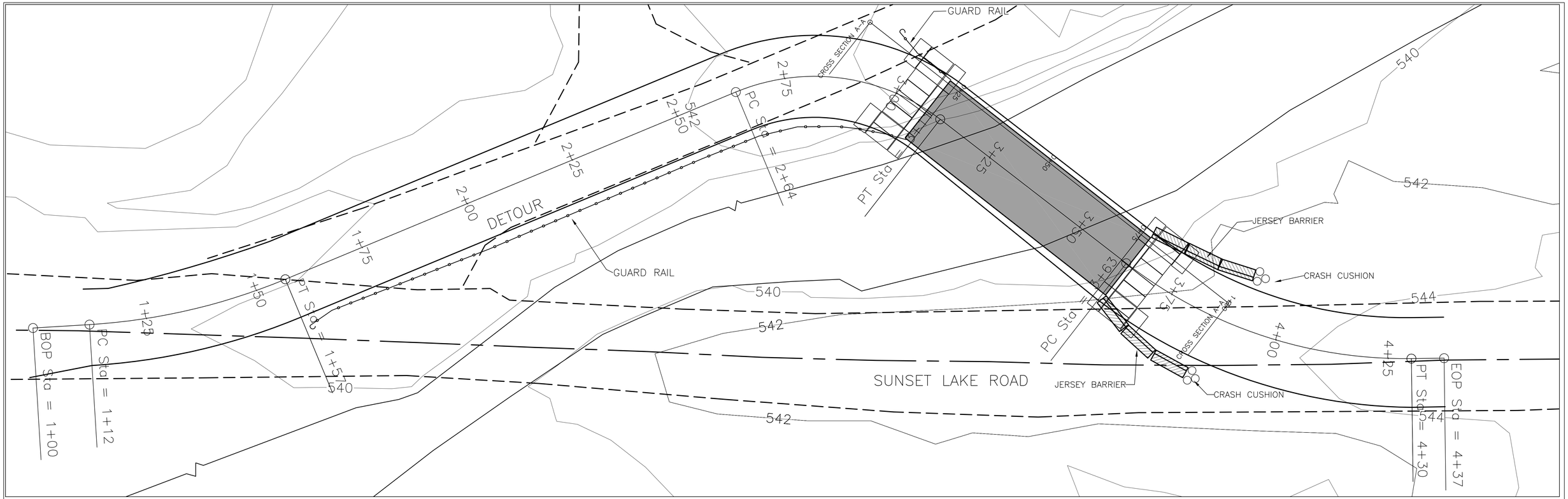

PLAN OF TEMPORARY BRIDGE 1" = 10'

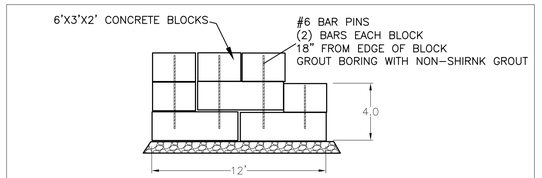

ELEVATION ABUTMENT 1" = 5'

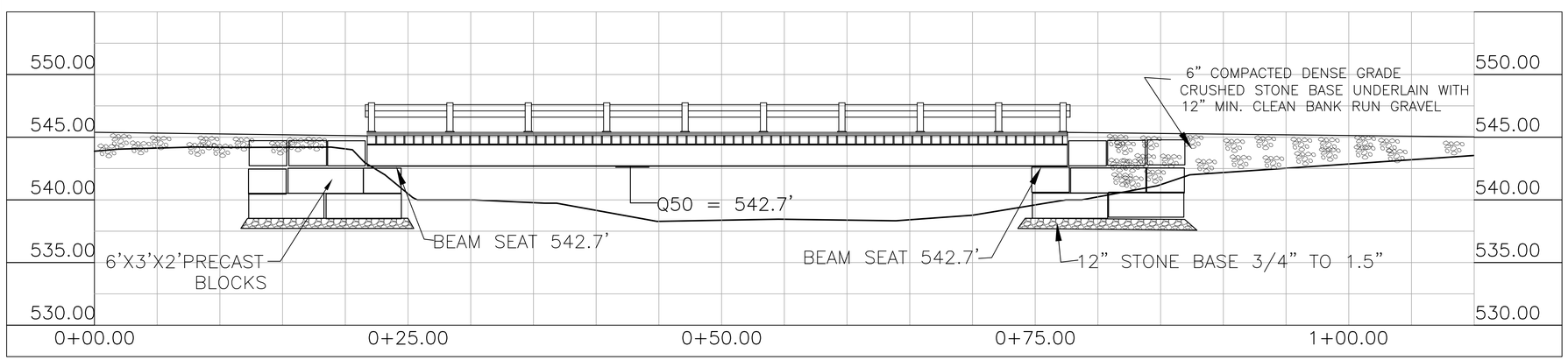

PROFILE OF TEMPORARY BRIDGE 1" =5'
SECTION A-A

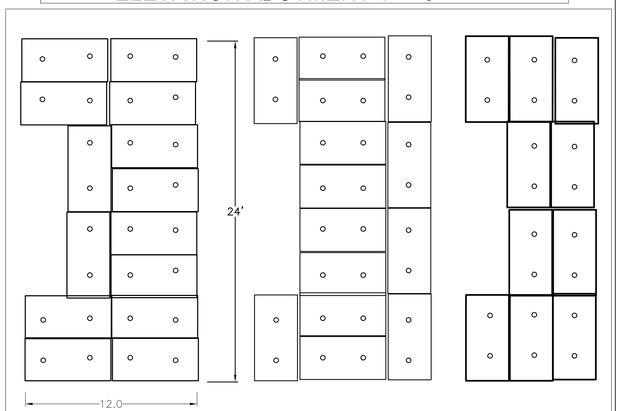

PLAN VIEW ABUTMENT 1" = 5'

STATE OF VERMONT
RONALD K. REED
No. 6994
REGISTERED
PROFESSIONAL ENGINEER

Ronald K. Reed

PLAN AND PROFILE OF TEMPORARY BRIDGE, ABUTMENTS & BYPASS ROAD

RENAUD BROS. INC.
BR0 1444 (35)
SUNSET LAKE ROAD
BRATTLEBORO, VT

DATE: 3-2-2014	

BELL ENGINEERING
CIVIL & ENVIRONMENTAL
17 ECHO COVE WAY-SPOFFORD, NH 03462
(603) 363-9966

SHEET
1

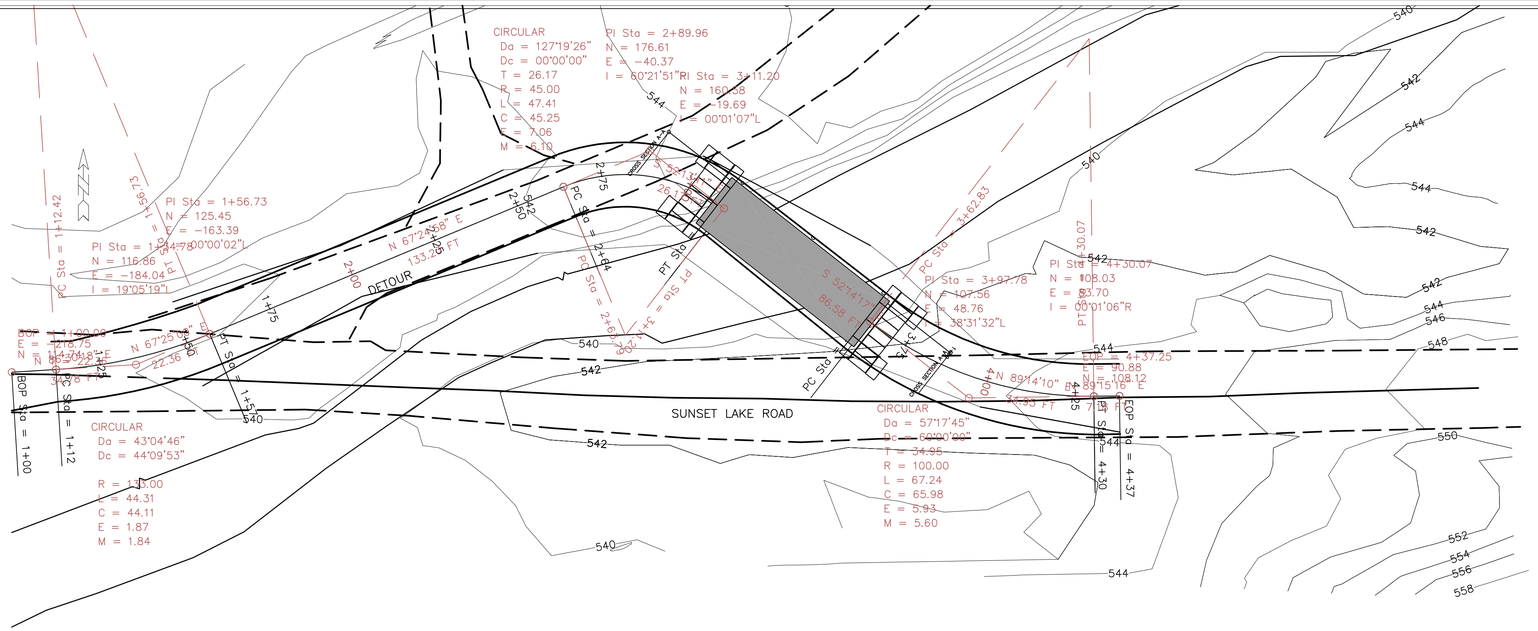

SCALES:
1" = 20' HOR
1" = 10' VER

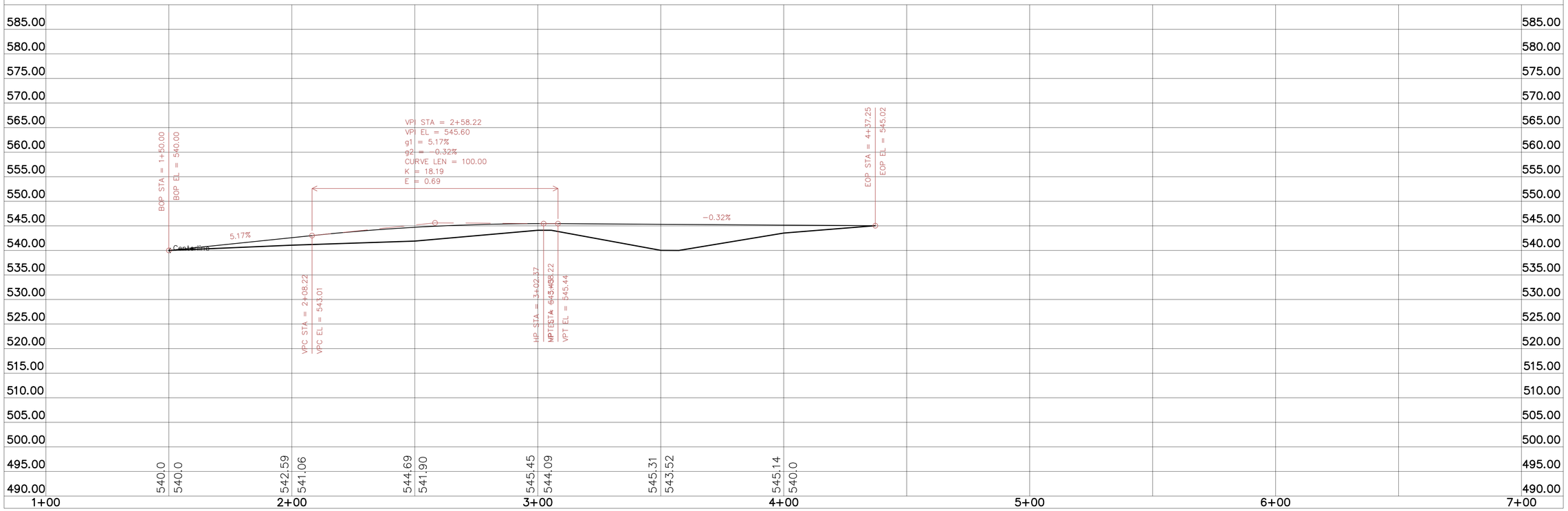

STATE OF VERMONT
RONALD K. BELL
No. 6694
REGISTERED
PROFESSIONAL ENGINEER

PLAN AND PROFILE

RENAUD BROS. INC.
BRO 1442 (35)
SUNSET LAKE ROAD
BRATTLEBORO, VT

DATE: 3-3-2014

BELL ENGINEERING
CIVIL & ENVIRONMENTAL
17 ECHO COVE WAY-SPOFFORD, NH 03462
(603) 363-9966

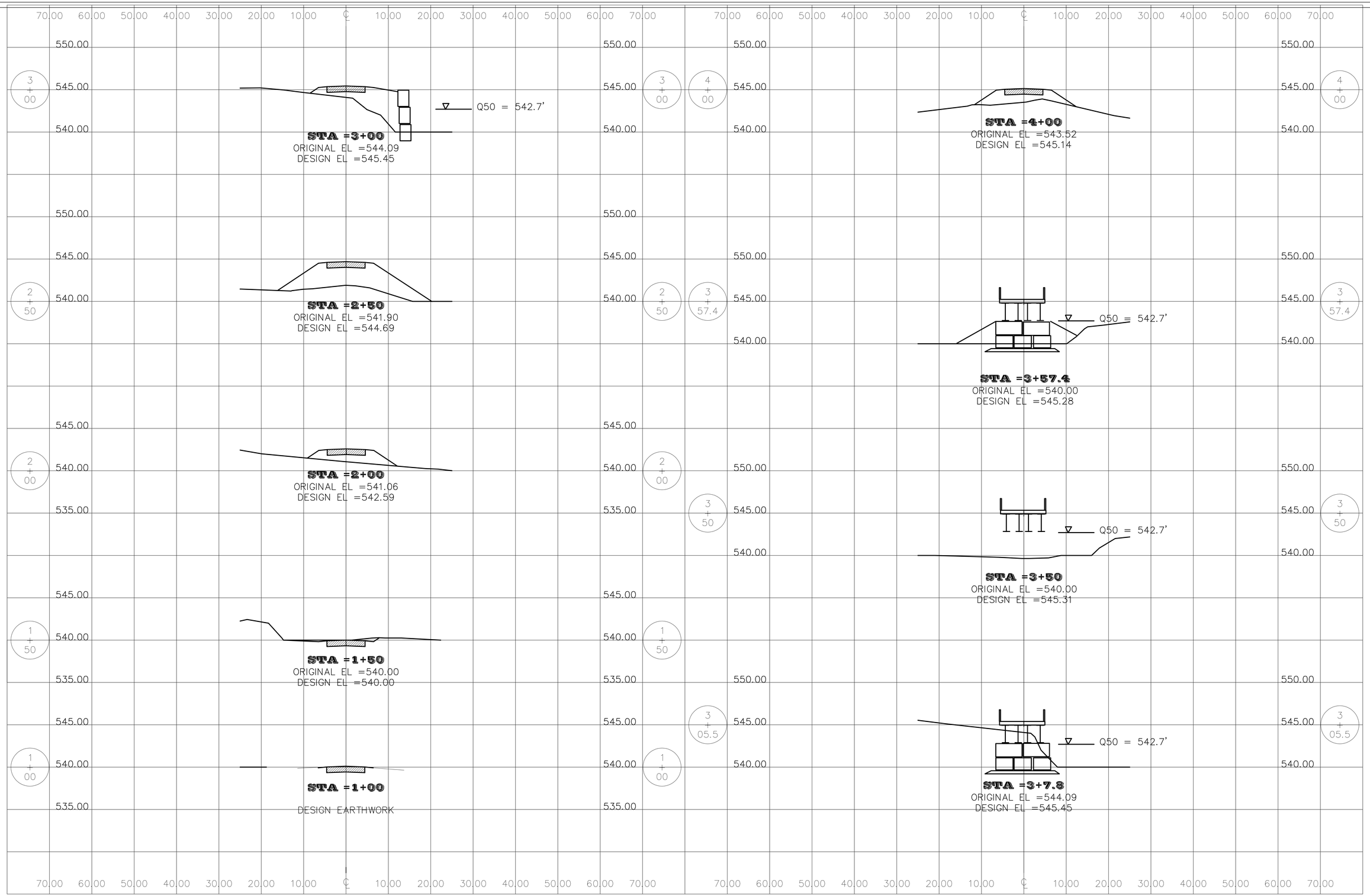

CROSS SECTIONS

RENAUD BROS. INC.
BRO 1442 (35)
SUNSET LAKE ROAD
BRATTLEBORO, VT

DATE: 3-3-2014

BELL ENGINEERING
CIVIL & ENVIRONMENTAL
17 ECHO COVE WAY-SPOFFORD, NH 03462
(603) 363-9966

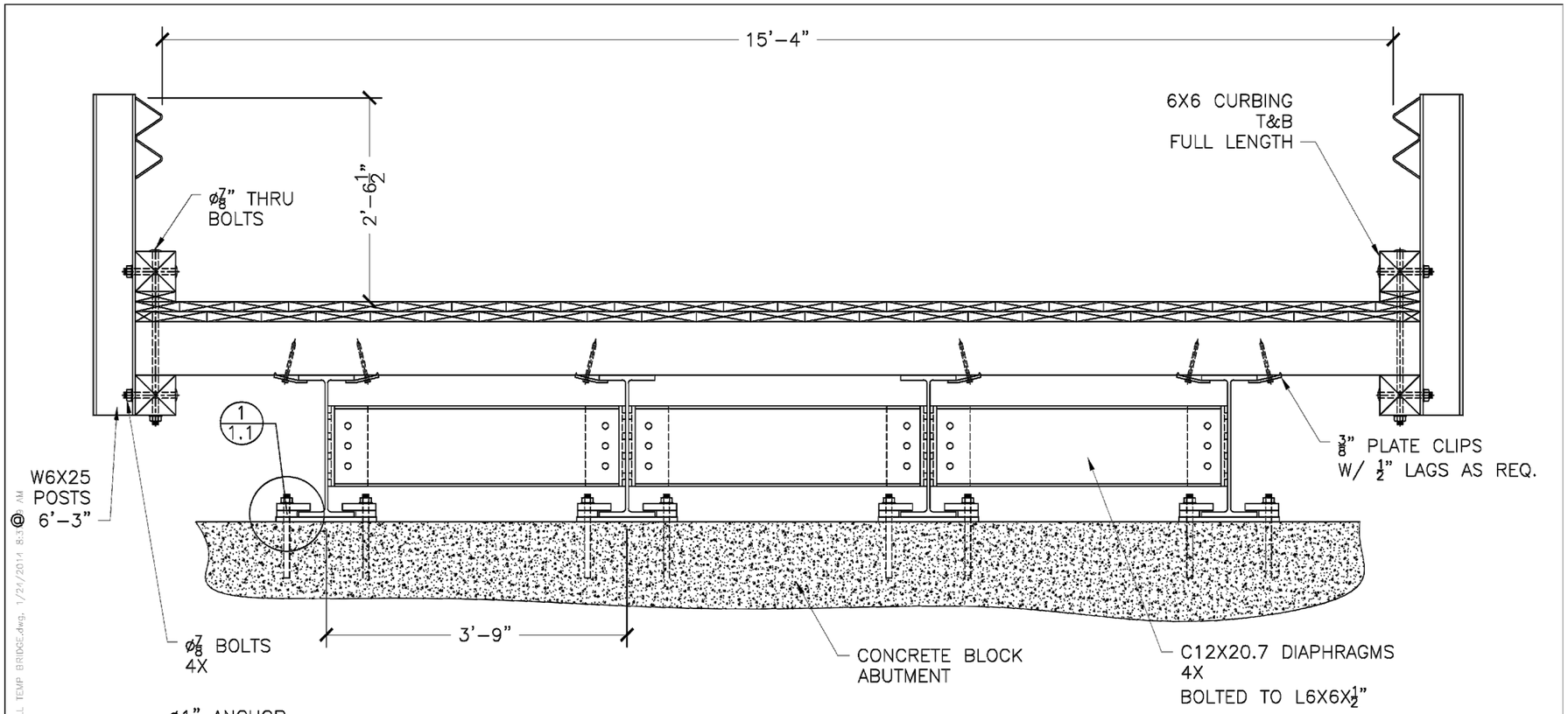

TEMPORARY BRIDGE END VIEW

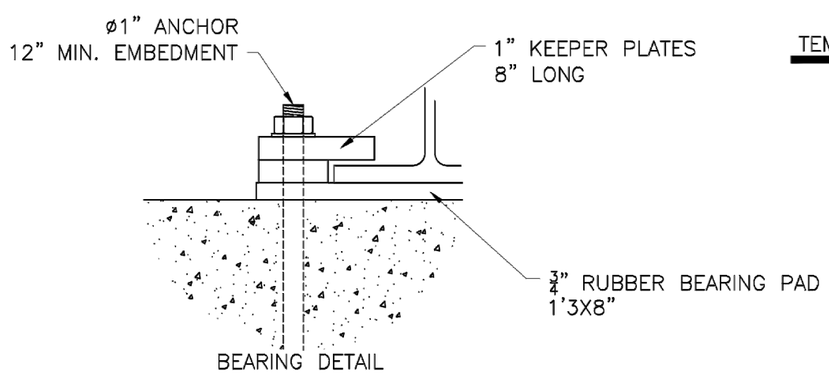

BEARING DETAIL

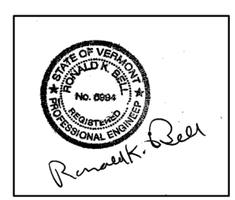

DO NOT SCALE DRAWINGS

DATE:	1/24/14
DRAWN BY:	A.D.
CHK'D BY:	C.E.

REV.		
NO.	DATE	COMMENTS

JOB NAME:	BRATTLEBORO
JOB NO:	BRO 1442(35)
SHEET NAME:	TEMP BRIDGE ELEVATION

RENAUD BROS., INC.
2859 F.T. BURGMAN RD., VERNON VT. 05354
PH.(802) 257-7529 FAX (802) 257-7508

SHEET: 4

F:\Users\Dunklee\Documents\Works In Progress 2014\SAGE HILL TEMP BRIDGE.dwg, 1/24/2014 8:3 AM

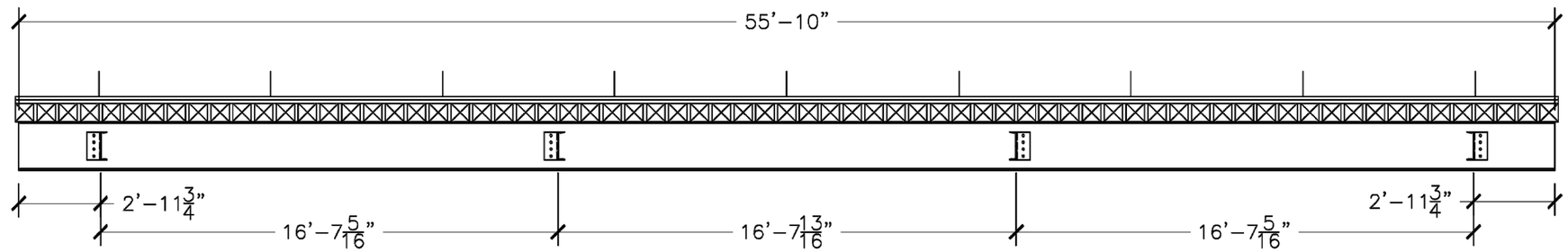

BRIDGE SIDE ELEVATION

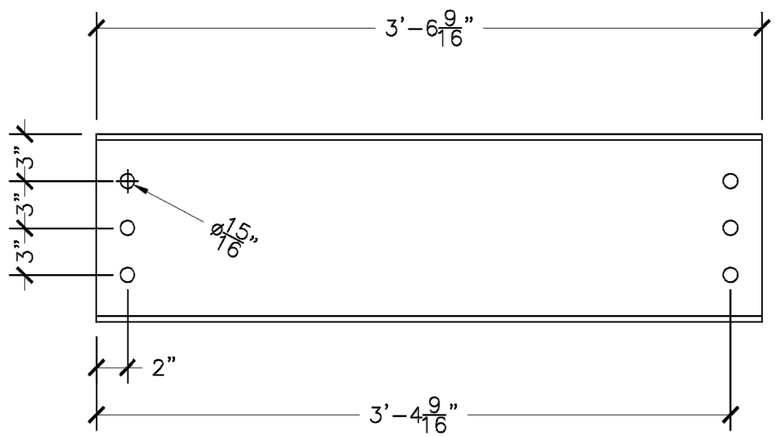

DIAPHRAGMS- 12 REQ.

MAT'L: C12X20.7

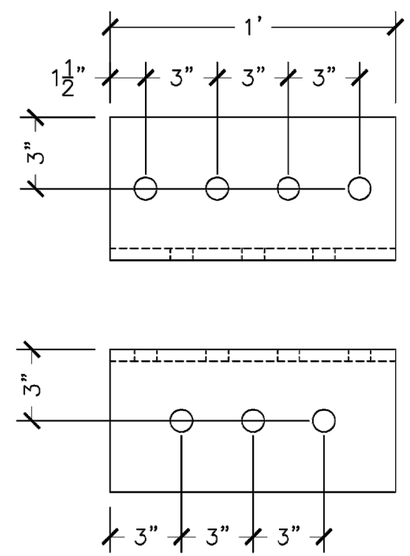

ANGLES- 24 REQ.

MAT'L: L6X6X1/2"

STATE OF VERMONT
RONALD K. BELL
No. 6994
REGISTERED
PROFESSIONAL ENGINEER

Ronald K. Bell

DO NOT SCALE DRAWINGS

REV.		
NO.	DATE	COMMENTS

DATE:	1/24/14
DRAWN BY:	A.D.
CHK'D BY:	C.E.

JOB NAME:	BRATTLEBORO
JOB NO:	BRO 1442(35)
SHEET NAME:	SID ELEVATION & DIAPHRAGM DET.

RENAUD BROS. INC.
CONSULTING ENGINEERS
DESIGN, BRIDGE & RESTORATION
TUNNEL & ETC.
2299 FT. DRIVE WAIRE VERMONT, 05364
PH.(802)297-7589 FAX:(802)297-7508

SHEET: 5

C:\Users\ADunkiee\Documents\Works In Progress 2014\SAGE HILL TEMP BRIDGE.dwg, 1/24/2014 8:37:49 AM

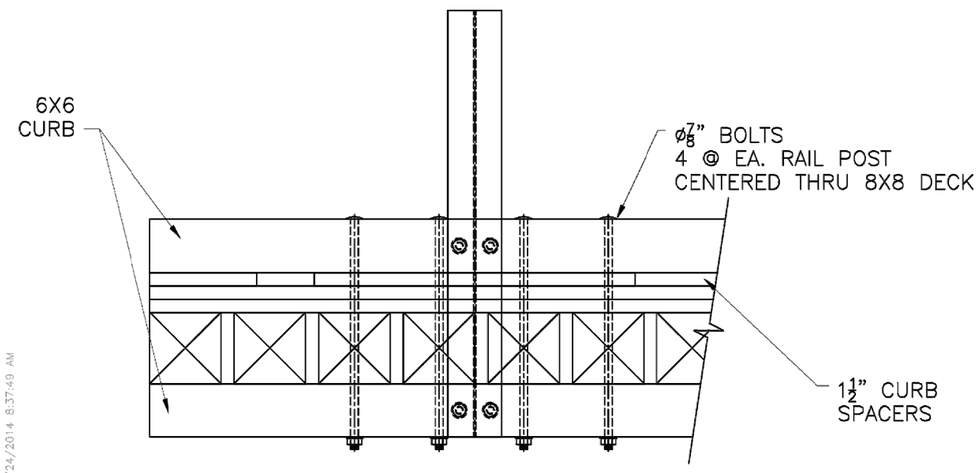

RAILING POST ATTACHMENT DETAIL

N.T.S.

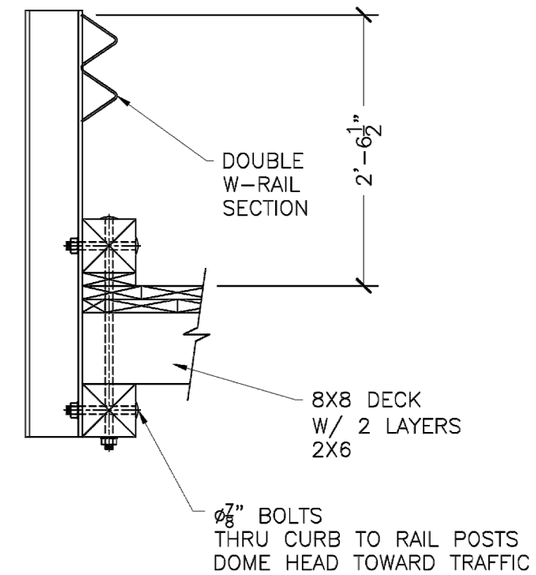

RAILING POST ATTACHMENT DETAIL

N.T.S.

STATE OF VERMONT
RONALD K. BELL
No. 6994
REGISTERED
PROFESSIONAL ENGINEER

DO NOT SCALE DRAWINGS

REV.		
NO.	DATE	COMMENTS

DATE:	1/24/14
DRAWN BY:	A.D.
CHK'D BY:	C.E.

JOB NAME:	BRATTLEBORO
JOB NO:	BRO 1442(35)
SHEET NAME:	RAIL ATTACHMENT DETAIL

RENAUD BROS. INC.
CIVIL, WELL & HYDROLOGIC
ENGINEERS
289 FT. ETHAN ALLEN RD. VERGENNES, VT. 05491
PH. (802) 297-7505 FAX (802) 247-7508

SHEET: 6

C:\Users\ADunklee\Documents\Works In Progress 2014\SAGE HILL TEMP BRIDGE.dwg, 1/24/2014 8:37:49 AM

BELL ENGINEERING
CIVIL & ENVIRONMENTAL
17 ECHO COVE WAY
SPOFFORD, NEW HAMPSHIRE 03462
(603) 363-9966

PROJECT NAME/ LOCATION: Brattleboro 1442 (35)
SHEET #: 1 OF 9
CALCULATED BY: Ron Bell DATE: 4-14-2014
CHECKED BY: DATE:
SCALE:

Temporary Bridge Calculations

Design = HL93

Design Load : Large of :

Design Truck

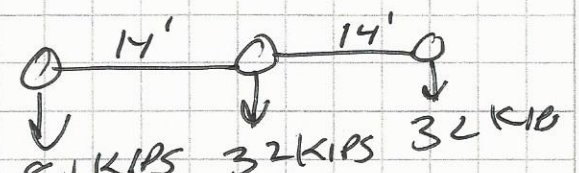

OR

~~DESIGN~~ Tandem

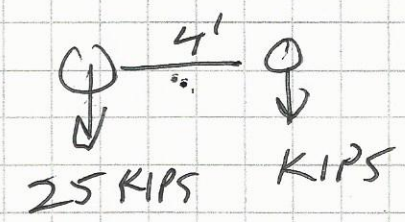

+

DESIGN LANE LOAD OF 0.640 KLF DISTRIBUTED OVER 10'

TO CHECK GOVERNING VEHICLE:
(USED ONLY FULL POINT LOAD OF VEHICLE
TRUCK LOAD = 65 7.7 K-ft
WITH WHEELS @ 7.7, 21.3 + 35.3'

FOR TANDEM
M = 600 K-ft
WITH WHEELS @ 24' + 28'

∴ DESIGN TRUCK GOVERNS

LOAD DISTRIBUTION

UNIFORM LANELOAD = 9/10 = 3.75/10 = 0.375 × 0.9 × 0.64 = 0.216 KLF

(Vtrans temp modification)

WHEELOAD MOMENTS:

FROM Table 4.6.2.2.2d-1 USE LEVER RULE
FOR EXTERIOR BEAMS

STATE OF VERMONT
RONALD K BELL
NO 8384
PROFESSIONAL ENGINEER

BELL ENGINEERING
CIVIL & ENVIRONMENTAL
17 ECHO COVE WAY
SPOFFORD, NEW HAMPSHIRE 03462
(603) 363-9966

PROJECT NAME/ LOCATION: Brattleboro 1442(35)
SHEET #: 2 OF 9
CALCULATED BY: Ron Bell DATE: 4-14-2014
CHECKED BY: DATE:
SCALE:

DISTRIBUTION ON EXTERIOR BEAMS

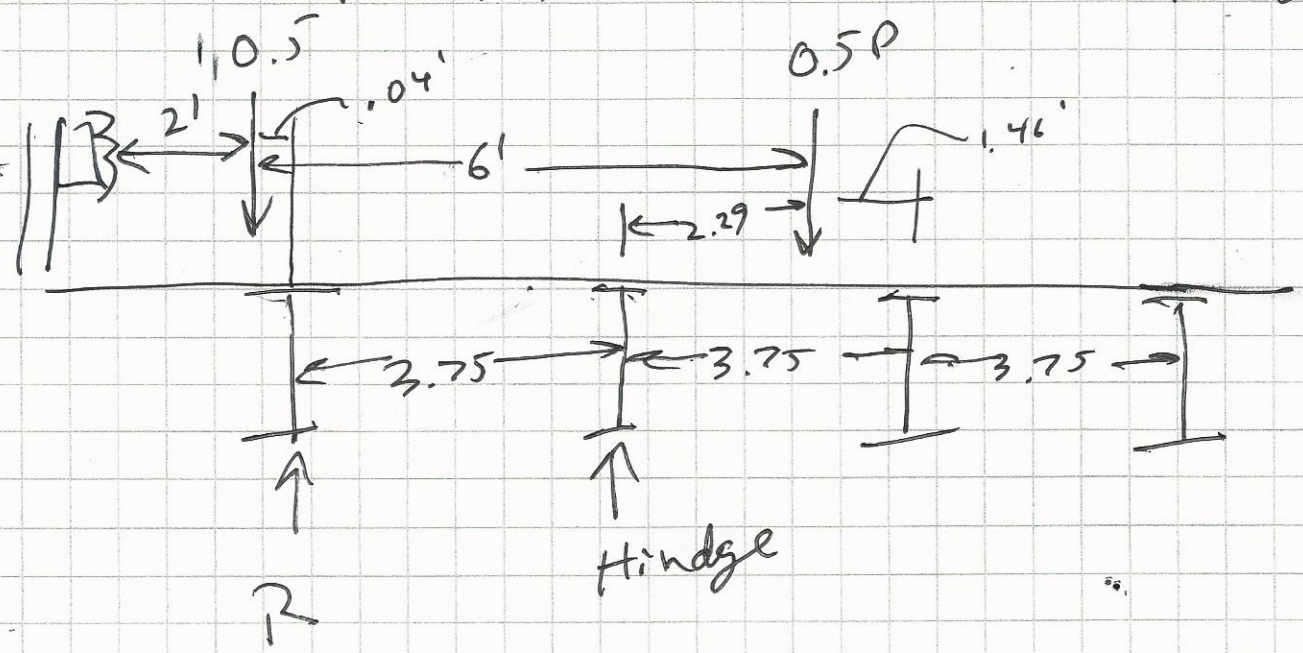

$$M_{HINDG} = (-2.29)(0.5P) + (3.79)(0.5P) - (3.75)(R) = 0$$

$$R = 0.2P$$

DISTRIBUTION ON INTERIOR BEAMS:
FROM Table 4.6.2.2.2-1 DISTRIBUTION FOR
PLANK DECK = S/6.7 = $\frac{3.75}{6.7}$ = 0.56
↑
ON WHEEL LOAD

$$\frac{0.56}{2 \text{ wheels}} = 0.28\,P$$

STATE OF VERMONT
RONALD K. BELL
NO 8684
PROFESSIONAL ENGINEER

BELL ENGINEERING
CIVIL & ENVIRONMENTAL
17 ECHO COVE WAY
SPOFFORD, NEW HAMPSHIRE 03462
(603) 363-9966

PROJECT NAME/ LOCATION: Brattleboro 1442(35)
SHEET #: 3 OF 9
CALCULATED BY: Ron Bell DATE: 4-14-2014
CHECKED BY: DATE:
SCALE:

LOAD CALC. CONT.

DYNAMIC LOAD ALLOWANCE = 1.33

VTrans Temp Bridge Load Modifier = 0.9

FACTORS FOR STRENGTH I CASE:

LL = 1.75
IM = 1.75
DL = 1.25

DEAD LOAD = 185 #/ft

Applied Wheel loads = DF (0.256) x IM (1.33) x 0.9 = 0.34P

8 KIPS x 0.34 = 2.72 KIPS FRONT WHEELS

32 KIPS x 0.34 = 10.88 KIPS REAR WHEELS

STATE OF VERMONT
RONALD K. BELL
NO 6304
PROFESSIONAL ENGINEER

BELL ENGINEERING
CIVIL & ENVIRONMENTAL
17 ECHO COVE WAY
SPOFFORD, NEW HAMPSHIRE 03462
(603) 363-9966

PROJECT NAME/ LOCATION: Brattleboro 1442(35)
SHEET #: 4 OF 9
CALCULATED BY: Ron Bell DATE: 4-14-2014
CHECKED BY: DATE:
SCALE:

CHECK MAX. BENDING + SHEAR STRESS RATIOS;
FROM ENERCALC

BELL ENGINEERING
CIVIL & ENVIRONMENTAL
17 ECHO COVE WAY-SPOFFORD, NH 03462
(603) 363-9966

Project Title: BRO 1442 135
Engineer: RON BELL
Project Descr: TEMPORARY BRIDGE
Project ID: 2014-32

Printed: 14 APR 2014, 8:57AM

Steel Beam

File = C:\Users\Ron\DOCUME~1\ENERCA~1\SUC4E3~1.EC6
ENERCALC, INC. 1983-2013, Build:6.13.8.31, Ver:6.13.12.31

Lic. # : KW-06009396 Licensee : Bell Engineering

Description : --None--

CODE REFERENCES

Calculations per AISC 360-05, IBC 2006, CBC 2007, ASCE 7-05
Load Combination Set : ASCE 7-05

Material Properties

Analysis Method : Load Resistance Factor Design
Beam Bracing : Beam is Fully Braced against lateral-torsional buckling
Bending Axis : Major Axis Bending
Load Combination ASCE 7-05

Fy : Steel Yield : 50.0 ksi
E: Modulus : 29,000.0 ksi

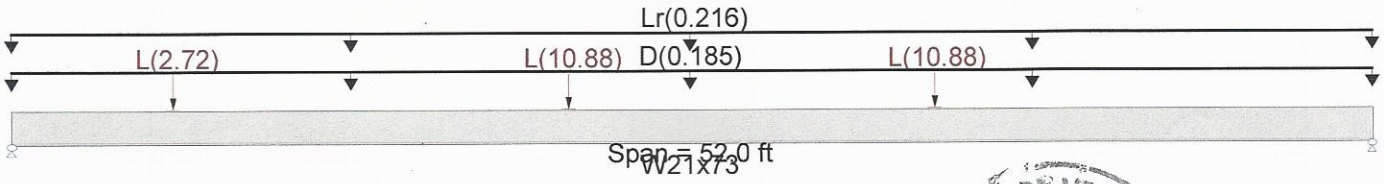

Applied Loads

Service loads entered. Load Factors will be applied for calculations.

Load(s) for Span Number 1
Point Load : L = 2.720 k @ 6.20 ft
Point Load : L = 10.880 k @ 21.30 ft
Point Load : L = 10.880 k @ 35.30 ft
Uniform Load : D = 0.1850 k/ft, Tributary Width = 1.0 ft
Uniform Load : Lr = 0.2160 k/ft, Tributary Width = 1.0 ft

STATE OF VERMONT RONALD R. BELL NO 6884 PROFESSIONAL ENGINEER

DESIGN SUMMARY

Design OK

Maximum Bending Stress Ratio =	0.898 : 1	Maximum Shear Stress Ratio =	0.127 : 1
Section used for this span	W21x73	Section used for this span	W21x73
Mu : Applied	578.951 k-ft	Vu : Applied	36.787 k
Mn * Phi : Allowable	645.000 k-ft	Vn * Phi : Allowable	289.380 k
Load Combination	+1.125D+1.750Lr+1.750L	Load Combination	+1.125D+1.750Lr+1.750L
Location of maximum on span	22.100 ft	Location of maximum on span	0.000 ft
Span # where maximum occurs	Span # 1	Span # where maximum occurs	Span # 1

BELL ENGINEERING
CIVIL & ENVIRONMENTAL
17 ECHO COVE WAY-SPOFFORD, NH 03462
(603) 363-9966

Project Title: BRO 1442 135
Engineer: RON BELL
Project Descr: TEMPORARY BRIDGE

Project ID: 2014-32

DEFLECTION CALCS

5/9

Printed: 14 APR 2014, 8:55AM

Steel Beam

File = c:\Users\Ron\DOCUME~1\ENERCA~1\SUB031~1.EC6
ENERCALC, INC. 1983-2013, Build:6.13.8.31, Ver:6.13.12.31

Lic. # : KW-06009396 — Licensee : Bell Engineering

Description : --None--

NOTE: DEFLECTION DISTRIBUTED EQUALLY OVER ALL BEAMS. UNIFORM LANE LOAD NOT INCLUDED.

CODE REFERENCES

Calculations per AISC 360-05, IBC 2006, CBC 2007, ASCE 7-05
Load Combination Set : ASCE 7-05

STATE OF VERMONT RONALD K. BELL NO 9664 PROFESSIONAL ENGINEER

Material Properties

Analysis Method : Load Resistance Factor Design
Beam Bracing : Beam is Fully Braced against lateral-torsional buckling
Bending Axis : Major Axis Bending
Load Combination ASCE 7-05

Fy : Steel Yield : 50.0 ksi
E: Modulus : 29,000.0 ksi

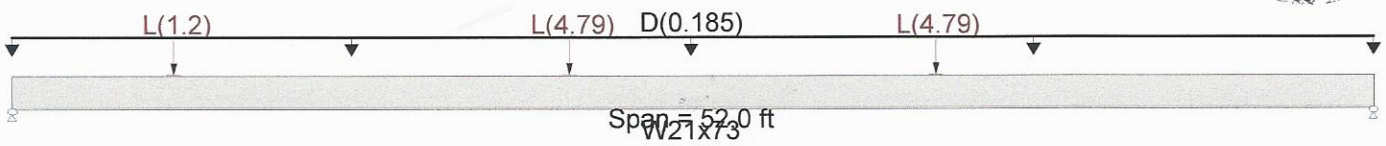

Applied Loads

Service loads entered. Load Factors will be applied for calculations.

Load(s) for Span Number 1
- Point Load : L = 1.20 k @ 6.20 ft
- Point Load : L = 4.790 k @ 21.30 ft
- Point Load : L = 4.790 k @ 35.30 ft
- Uniform Load : D = 0.1850 k/ft, Tributary Width = 1.0 ft

DESIGN SUMMARY

Design OK

Maximum Bending Stress Ratio =	0.370 : 1	Maximum Shear Stress Ratio =	0.051 : 1
Section used for this span	W21x73	Section used for this span	W21x73
Mu : Applied	238.487 k-ft	Vu : Applied	14.902 k
Mn * Phi : Allowable	645.000 k-ft	Vn * Phi : Allowable	289.380 k
Load Combination	+1.125D+1.750Lr+1.750L	Load Combination	+1.125D+1.750Lr+1.750L
Location of maximum on span	21.320 ft	Location of maximum on span	0.000 ft
Span # where maximum occurs	Span # 1	Span # where maximum occurs	Span # 1

Maximum Deflection

Max Downward L+Lr+S Deflection	0.986 in	Ratio =	632
Max Upward L+Lr+S Deflection	0.000 in	Ratio =	0 <180
Max Downward Total Deflection	1.647 in	Ratio =	379
Max Upward Total Deflection	0.000 in	Ratio =	0 <160

Overall Maximum Deflections - Unfactored Loads

Load Combination	Span	Max. "-" Defl	Location in Span	Load Combination	Max. "+" Defl	Location in Span
D+L	1	1.6474	26.260		0.0000	0.000

Vertical Reactions - Unfactored

Support notation : Far left is #1 — Values in KIPS

Load Combination	Support 1	Support 2
Overall MAXimum	10.233	10.167
D Only	4.810	4.810
L Only	5.423	5.357
D+L	10.233	10.167

Steel Section Properties : W21x73

Depth	=	21.200	in	I xx	=	1,600.00	in^4	J	= 3.020 in^4
Web Thick	=	0.455	in	S xx		151.00	in^3	Cw	= 7,410.00 in^6
Flange Width	=	8.300	in	R xx	=	8.640	in		
Flange Thick	=	0.740	in	Zx	=	172.000	in^3		
Area	=	21.500	in^2	I yy	=	70.600	in^4		
Weight	=	73.186	plf	S yy	=	17.000	in^3	Wno	= 42.500 in^2
Kdesign	=	1.240	in	R yy	=	1.810	in	Sw	= 65.200 in^4
K1	=	0.875	in	Zy	=	26.600	in^3	Qf	= 29.700 in^3
rts	=	2.190	in	rT	=	2.130	in	Qw	= 85.000 in^3
Ycg	=	10.600	in						

BELL ENGINEERING
CIVIL & ENVIRONMENTAL
17 ECHO COVE WAY-SPOFFORD, NH 03462
(603) 363-9966

Project Title: BRO 1442 (35)
Engineer: RON BELL
Project Descr: TIMBER DECK

Project ID: 2014-35

6/9

TIMBER DECK CALCS

Printed: 14 APR 2014, 10:16AM

Wood Beam

File = c:\Users\Ron\DOCUME~1\ENERCA~1\SU9B75~1.EC6
ENERCALC, INC. 1983-2013, Build:6.13.8.31, Ver:6.13.12.31

Lic. # : KW-06009396 — Licensee : Bell Engineering

Description : --None-- Per 4.6.2.1.3 Wp = 7.5"/10"

CODE REFERENCES

Calculations per NDS 2005, IBC 2006, CBC 2007, ASCE 7-05
Load Combination Set : ASCE 7-05

Material Properties

Analysis Method : Load Resistance Factor D
Load Combination ASCE 7-05

Wood Species : Spruce - Pine - Fir (South)
Wood Grade : NO.1

Beam Bracing : Beam is Fully Braced against lateral-torsion buckling

Fb - Tension	1,200.0 psi
Fb - Compr	600.0 psi
Fc - Prll	1,200.0 psi
Fc - Perp	600.0 psi
Fv	105.0 psi
Ft	725.0 psi

E : Modulus of Elasticity

Ebend- xx	1,200.0 ksi
Eminbend - xx	440.0 ksi
Density	23.190 pcf

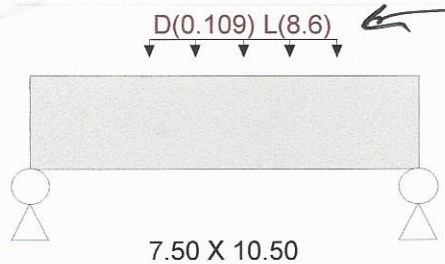

20" patch width

Span = 3.420 ft

Applied Loads

Service loads entered. Load Factors will be applied for calculations.

Load for Span Number 1
Uniform Load : D = 0.1090, L = 8.60 k/ft, Extent = 1.045 -->> 2.705 ft, Tributary Width = 1.0 ft

DESIGN SUMMARY

Design OK

Maximum Bending Stress Ratio	=	0.543 : 1	Maximum Shear Stress Ratio	=	0.958 : 1
Section used for this span		7.50 X 10.50	Section used for this span		7.50 X 10.50
fb : Actual	=	1,408.08 psi	fv : Actual	=	217.34 psi
FB : Allowable	=	2,592.00 psi	Fv : Allowable	=	226.80 psi
Load Combination		+1.250D+1.750L	Load Combination		+1.250D+1.750L
Location of maximum on span	=	1.797 ft	Location of maximum on span	=	2.546 ft
Span # where maximum occurs	=	Span # 1	Span # where maximum occurs	=	Span # 1

Maximum Deflection

Max Downward L+Lr+S Deflection	0.021 in	Ratio =	1944
Max Upward L+Lr+S Deflection	0.000 in	Ratio =	0 <360
Max Downward Total Deflection	0.021 in	Ratio =	1920
Max Upward Total Deflection	0.000 in	Ratio =	0 <180

Overall Maximum Deflections - Unfactored Loads

Load Combination	Span	Max. "-" Defl	Location in Span	Load Combination	Max. "+" Defl	Location in Span
D+L	1.	0.0214	1.747		0.0000	0.000

Vertical Reactions - Unfactored

Support notation : Far left is #1 — Values in KIPS

Load Combination	Support 1	Support 2
Overall MAXimum	6.531	7.926
D Only	0.082	0.099
L Only	6.449	7.827
D+L	6.531	7.926

STATE OF VERMONT
RONALD K. BELL
NO 8894
PROFESSIONAL ENGINEER

BELL ENGINEERING
CIVIL & ENVIRONMENTAL
17 ECHO COVE WAY
SPOFFORD, NEW HAMPSHIRE 03462
(603) 363-9966

PROJECT NAME/ LOCATION: Brattleboro 1442 (3-)
SHEET #: 7 OF 9
CALCULATED BY: Ron Bell DATE: 4-14-2017
CHECKED BY: DATE:
SCALE:

SUB STRUCTURE DESIGN

1 TRUCK = 72 KIPS x 1.75 x 1.33 = 168 KIPS
DECK = 52' x (19/12)(50 #/ft³) x 16' = 35 KIPS
steel beams = 4 x 52' x 73 #/ft = 15 KIPS
} 218 KIPS

CONC. BLOCK FOUNDATION = 38 BLOCKS x 3x2x6 x 150 #/ft³ = 205 KIPS

$P_u = \frac{218 \text{ KIPS}}{2 \text{ sides}} + 205 \text{ KIPS} = 314 \text{ KIPS/SIDE}$

q_u = Factored Load/ft² = $\frac{314 \text{ KIPS}}{252 \text{ ft}^2} = 1.25 \frac{\text{KIPS}}{\text{ft}^2}$

FROM C10.6.2.6.1-1
FOR SW, SP MEDIUM DENSE TO DENSE RECOMMED
BEARING CAPACITY = 6.0 KSF

FOR FOUNDATION RESISTANCE FACTOR = 0.45

6 KSF x 0.45 = 2.7 KSF

2.7 KSF > 1.25 KSF OK

STATE OF VERMONT
RONALD K BELL
NO 8994
PROFESSIONAL ENGINEER

BELL ENGINEERING
CIVIL & ENVIRONMENTAL
17 ECHO COVE WAY
SPOFFORD, NEW HAMPSHIRE 03462
(603) 363-9966

PROJECT NAME/ LOCATION: BRO 1442 (35)
SHEET #: 8 OF 9
CALCULATED BY: Ron Bell DATE: 2-14-2014
CHECKED BY: DATE:
SCALE:

STATE OF VERMONT RONALD K BELL NO 6394 PROFESSIONAL ENGINEER

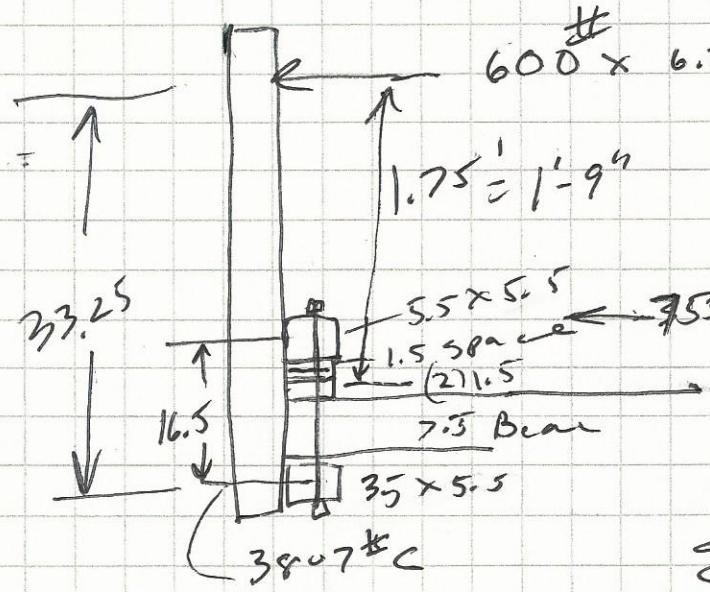

$\Sigma M_{\text{LOWER BOLT}} = (33.25)(3750) - 16.5(X) = 0$

$X = 7557\#$ T TENSION

$\Sigma F_H = 3750 - 7557 = 3807\#$ C COMPRESSION

CHECK SIDE BEARING OF 6X6

3/4" Dia bolt + 1/8 hole = 7/8" x 5.5" x 4 Bolts = 19.25 in²

$\frac{7557\#}{19.25 \text{ in}^2} = 392$ psi

SYP ∥ To Grain $F_c = 525$ psi > 392 psi OK

CHECK TOP TENSION BOLTS:

$\frac{7557\#}{2 \text{ Bolts}} = 3,778\#/\text{bolt}$

Bearing area required $= \frac{3778\#}{525 \text{ psi}} = 7.2 \text{ in}^2$

Provide washer 4"x2"x1/4" 8 in² − 0.5 in² (Hole) = 7.5 in² OK

BELL ENGINEERING
CIVIL & ENVIRONMENTAL
17 ECHO COVE WAY
SPOFFORD, NEW HAMPSHIRE 03462
(603) 363-9966

PROJECT NAME/ LOCATION: BRO 1442 (35)
SHEET #: 9 OF 9
CALCULATED BY: RON BELL DATE: 2-14-2014
CHECKED BY: DATE:
SCALE:

TO PREVENT SIDE BLOWOUT COMPLY ~~WITH~~ WITH MIN. EDGE DISTANCE SET FORTH IN NDS:

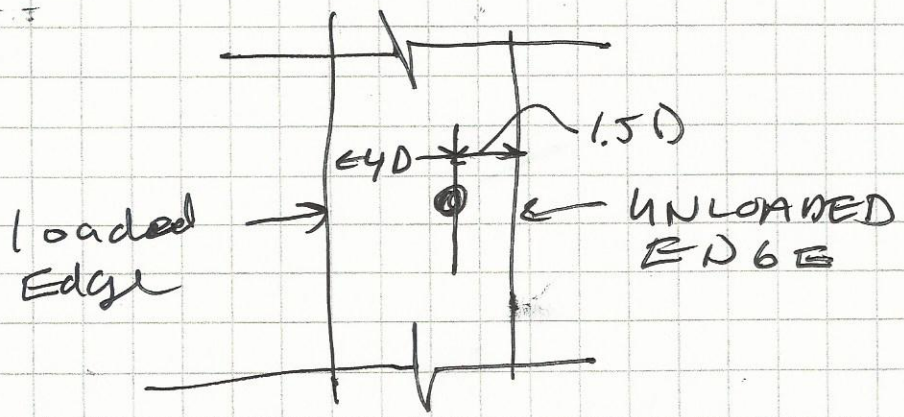

4 x .75" = 3" MIN. EDGE DISTANCE

SUBSTRUCTURE:

BEAMS TO SIT ON (2) ROWS 6x3x2 HIGH CONCRETE BLOCKS - STAGGER JOINTS TO DISTRIBUTE LOADS TO SOIL.

AREA PROVIDED FOR SOIL BEARING BASED ON 3.75' BEAM SPACING = 3.75' x 6' = 22.5 ft2

FACTORED BEAM REACTION = 34 KIPS

$\frac{34}{22.5} = 1.5 \frac{KIPS}{ft2}$ >>> 2000 psf min OF NATIVE SOIL.

STATE OF VERMONT
RONALD K. BELL
NO 6394
PROFESSIONAL ENGINEER