RENAUD BROS., INC.

283 Fort Bridgeman Road #2, Vernon, VT 05354 **phone (802) 257-7383**
fax (802) 257-7308

Brattlboro BRO 1442 (35)

Excavation Support Plan

Description

The excavation support plan includes a combination of slide rail system, concrete gravity blocks and sloped excavations. The slide rail system has stamped tabulated data, and the concrete block details and calculations are included. The water will be diverted using the approved water diversion plan. The water diversion pipe will be supported as necessary. Any localized dewatering for the bottom of the excavation will be accomplished with pumps and discharged to our approved off site yard location.

Demolition of Existing Bridge

Once the traffic has been transferred to the temporary bypass we will start demolition of the existing bridge deck. Once the bridge deck is removed we will install the water diversion pipe. After the diversion pipe is installed sealed and supported we will remove the existing abutments and install the shoring system and construct the abutments per the phased layout.

Phase One

Phase two includes building abutment two and wing wall 4. The 48 foot slide rail system will allow us to complete the abutment in one excavation support setting. Once the abutment is built and the backfill process has begun we will remove the slide rail system as the backfilling progresses.

Phase Two

Phase two includes building wing wall three to the control joint at the step in the footing. There does not appear to be any longitudinal bars running through the control joint. The slide rail removal will commence with the backfilling operation and excavation of phase three.

Phase Three

Phase three includes building the last piece of wing wall three. The elevation to the footing grade is shallow enough that we can open cut the excavation and slope the banks at 1 to 1. Backfilling will commence in lifts as specified.

Phase Four

Phase four includes removing existing abutment one, building abutment one and excavating wing wall two. Abutment one footing will be placed and the slide rail will be lifted so wing wall two footing can be placed and abutment one can be placed to the beam seat. The footing control joint is not detailed on the drawings but we will place the footing one foot beyond the

control joint before moving to phase six. Slide rail removal will commence with the backfilling operation.

Phase Five
Phase five includes final placement of wing wall two and backfilling.

Deck Construction
The deck construction will commence once phase five has been completed. The deck needs to be completed to allow traffic onto the new bridge. Once the traffic is transferred to the new bridge phase six will commence.

Phase Six
Phase six includes building the final piece of abutment one. Regina Vista would be shutdown at the intersection of Sunset lake road to the first driveway. Access to 14 Regina Vista, (Valery Yandow's driveway) will be maintained. The traffic for Regina Vista would utilize the temporary bridge for access. During phase six the existing structure would be in use.

A trench box will be excavated in evenly to the bottom of footing depth and the soils above the trench box would be excavated back on a one to one slope. Once abutment one was completed the excavation will be backfilled in lifts pulling up the trench box as the lifts rise.

NOTE:
PHASE 6 WILL REQUIRE REGINA VISTA TO BE SHUTDOWN FROM SUNSET LAKE ROAD TO HOUSE NUMBER 14 DRIVEWAY. ACCESS TO HOUSE 14 WILL BE MAINTAINED

N

PHASE 6
16'Lx16'Hx14'W SLIDE RAIL SHOREING

PHASE 4
48'Lx16'Hx14'W SLIDE RAIL SHOREING WITH CENTER POSTS AND BRACEING AT 24'

3'Wx5'Lx1.5'H CONCRETE GRAVITY BLOCKS STACKED FIVE HIGH

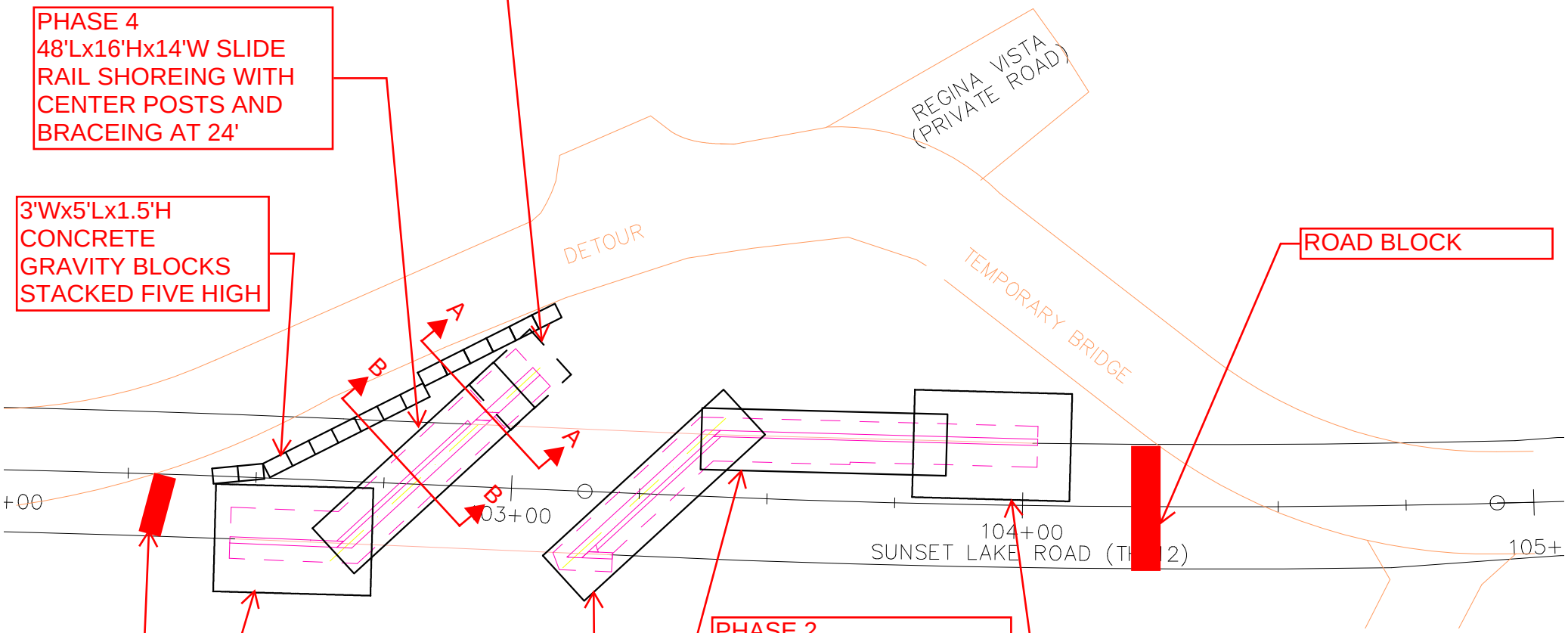

ROAD BLOCK

PHASE 2
48'Lx16'Hx14'W SLIDE RAIL SHOREING WITH CENTER POSTS AND BRACEING AT 24'

PHASE 3
SLOPED EXCAVATION 1 TO 1

PHASE 5
SLOPED EXCAVATION 1 TO 1

ROAD BLOCK

PHASE 1
48'Lx16'Hx14'W SLIDE RAIL SHOREING WITH CENTER POSTS AND BRACEING AT 24'

NOTE:
EXISTING BRIDGE NOT SHOWN FOR CLARITY

EXCAVATION SUPPORT PLAN
PAGE 3

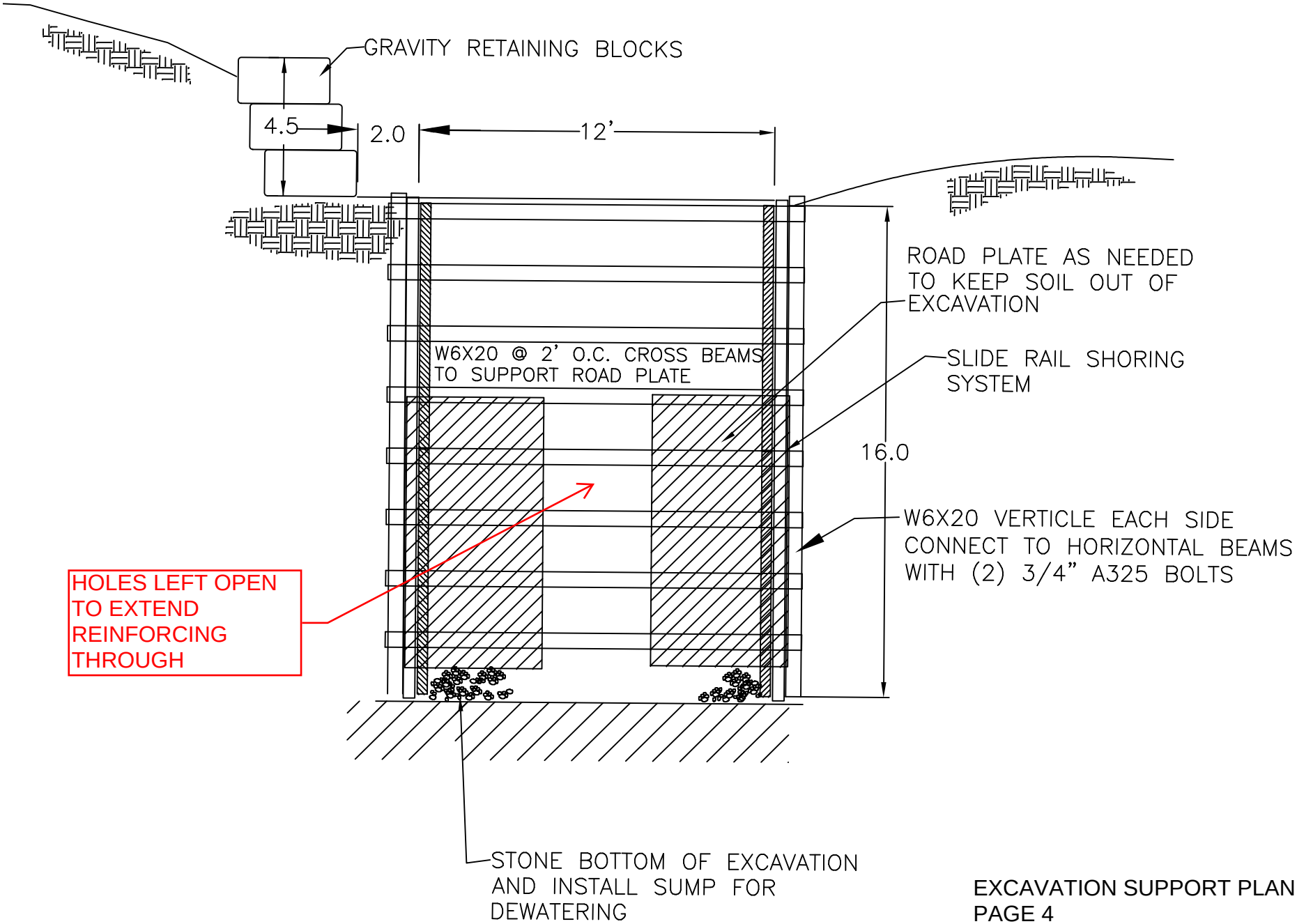

EXCAVATION SUPPORT PLAN
PAGE 4

SECTION A-A

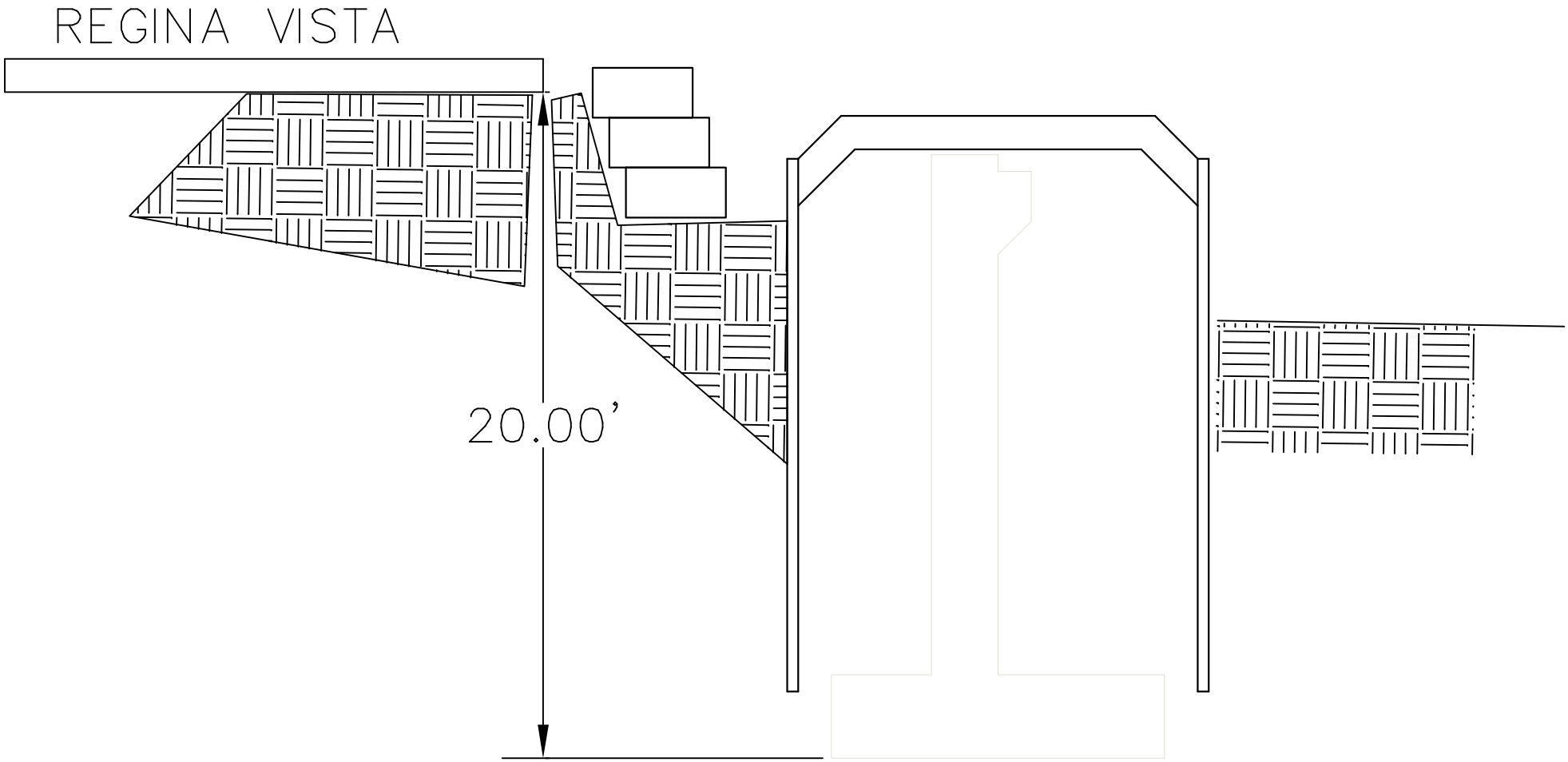

EXCAVATION SUPPORT PLAN
PAGE 5
SECTION B-B

Tabulated Data For

SLIDE RAIL SYSTEM

American Shoring, Inc.
207 Lake Street Newburgh, NY 12550
800-407-4674
Fax: 800-361-1973

© American Shoring, Inc. 2004

TABULATED DATA
FOR
SLIDE RAIL SYSTEM

1.0 SCOPE

This Data includes both pit (square & rectangular) and linear (pipeline) Slide Rail applications for excavation depths of 24 feet. For depths greater than 24 feet contact the engineering department at American Shoring, Inc. (ASI).

This Data complies with all United States Federal and individual state O.S.H.A. Regulations.

This Data applies only to ASI and SBH manufactured Slide Rail System.

2.0 TRAINING AND SAFETY

All personnel, competent persons, foremen, equipment operators and superintendents must be trained and/or knowledgeable in the use of Slide Rail systems. ASI can provide on-site instruction at customer request.

All excavation work and installation of the Slide Rail System shall be done following all applicable safety regulations and procedures.

All Slide Rail Panel, Rails and Struts shall be in good working condition.

3.0 APPLICATION

All cables, slings, chains, safety hooks and shackles shall be inspected for damage and shall be sufficient strength to support the loads applied.

Tag lines shall be used to place the individual pieces of the system.

Workers shall not be under Slide Rail Panels, Rails or Struts when they are being moved or placed in the excavation.

No Slide Rail Panel, Rail or Strut shall be allowed to stand unsupported in a position that may allow it to fall on a worker.

The Slide Rail System must be in a stable condition before any worker enters the excavation.

Workers must be protected from falling dirt and rocks at all times.

The bottom of the panels and rails shall be no higher than two feet above the bottom of the excavation while workers are in the excavation.

The excavation should be dug down four feet before the first Panels or Rails are placed in the excavation.

The Panels and Rail Pairs shall be pushed into the excavation after first digging under them with the excavator bucket. The Panels and Rails shall not be pounded on to drive them down into the excavation. Rather a "dig and push" method in small steps will provide the best results.

Workers shall clean out around and under the Panels and Rails with shovels if necessary and only when the Panels and Rails are stable and can not fall on the workers or injure them.

All Panels and Rails shall be installed vertical, plum and square to the other members of the system. It is important that the first rail pair and panels placed in the excavation shall be placed

© American Shoring, Inc. 2004

3.0 (CONTINUED)

properly (vertical, plum and square) to insure that the remaining panels and rails will go in correctly and easily.

It is necessary to backfill behind the panels and rails to fill any voids that form during placement of the system. This procedure is to maintain stability of the system and to maintain a tight excavation.

Extracting the panels from the slide rails is often the most difficult part of the process. Longer panel lengths contribute to the extraction difficulty and as a general rule shorter length panels should be used in less stable soil.

4.0 INSPECTION

The excavation and Slide Rail System shall be inspected daily by the competent person, who is the superintendent or foreman, to determine that the excavation, work site and Slide Rail System are safe and the work is proceeding properly and safely.

5.0 DEPTH AND CAPACITY TABLES

The tables show the lateral earth capacity of each length of Panel in pounds per square foot. An engineer may calculate the allowable working depth of the System from that lateral earth capacity.

The tables also show a maximum working depth for several types of soil. After determining the type of soil or the Equivalent Weight Effect (sometimes called Equivalent Fluid Pressure), the maximum working depth can be found listed under the column for that type of soil.

The tables do not include a surface surcharge.

The tables are limited to 24 feet deep.

For depths that are not shown in the tables contact the engineering department at American Shoring, Inc.

6.0 SPREADER AND SPREADER FRAMES

Pipe clearances and spreader lengths shown in the table are the maximum for typical conditions. For special conditions contact the engineering department at American Shoring, Inc.

7.0 SOIL TYPES

The soil classifications in the tables of A25, B45, C-1, C-2 and C-3 are described in the OSHA Excavation Regulations as Type A, B and C soils. They have Equivalent Weight Effects of 25 and 45 pounds per cubic feet per foot of depth (sometimes called Equivalent Fluid Pressure and it is in units of pounds per square feet).

Type C60 soil is a soft cohesive or moist granular soil that is not flowing or submerged. This soil can be cut vertically and will stand long enough to safely install the Slide Rail System. The Equivalent Weight Effect for this soil type is 60 pounds per cubic feet per foot of depth.

© American Shoring, Inc. 2004

MAXIMUM ALLOWABLE DEPTH TABLE

Panel Length	Capacity	Maximum Allowable Depth* Soil Type					
Feet	With 33% Overstress P.S.F.	A25 feet	B45 feet	C1 (50) feet	C (60) feet	C2 (65) feet	C3 (80) feet
8.202	5595			24'	24'	24'	24'
9.842	3886			24'	24'	24'	24'
11.56	2854			24'	24'	24'	24'
13.123	2185			24'	24'	24'	24'
14.764	1887	74'	41'	38'	34'	29'	24'
16.404	1528	60'	33'	31'	28'	24'	19'
18.044	1448	57'	32'	29'	25'	22'	18'
19.685	1217	48'	27'	24'	24'	19'	15'
21.325	1037	41'	23'	21'	19'	16'	13'
22.966	894	35'	20'	18'	16'	14'	11'
24.606	779	31'	17'	16'	14'	12'	10'
26.246	1133	45'	25'	23'	21'	18'	14'
27.887	1003	40'	22'	20'	18'	16'	13'
30.833	1002	40'	22'	20'	17'	15'	13'
31.401	791	31'	17'	16'	14'	12'	10'

For greater depth requirements than those shown here contact the engineering department at American Shoring, Inc.

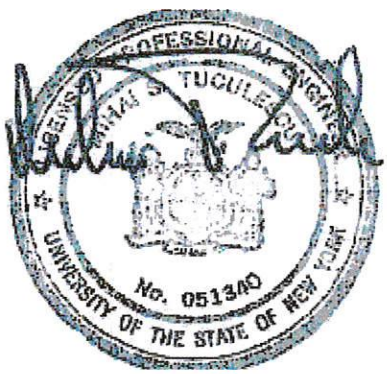

© American Shoring, Inc. 2004

Name :	Bearing cap.	Stage : 1; Analysis: -1

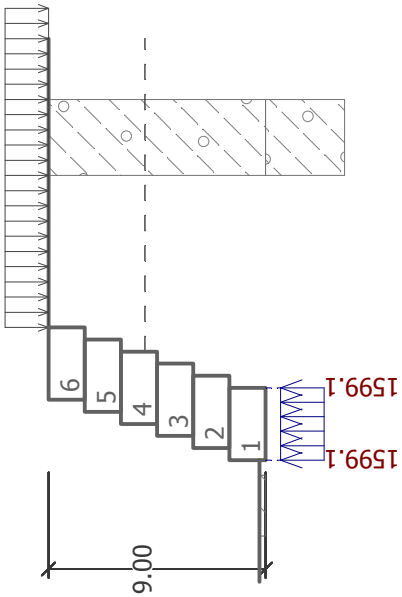

[GeoStructural Analysis - Prefab Wall | version 5.16.13.0 | Copyright © 2013 Fine spol. s r.o. All Rights Reserved | www.finesoftware.eu]

Prefab wall analysis

Input data

Project

Task : SUNSET LAKE ROAD
Descript. : GRAVITY BLOCK RETAINING WALL
Author : RON BELL
Customer : RENAUD BROS.
Date : 6/3/2014

Settings

USA - Safety factor

Materials and standards

Concrete structures : ACI 318-11

Wall analysis

Active earth pressure calculation : Coulomb
Passive earth pressure calculation : Mazindrani (Rankin)
Earthquake analysis : Mononobe-Okabe
Shape of earth wedge : Calculate as skew
Verification methodology : Safety factors (ASD)

Safety factors			
Permanent design situation			
Safety factor for overturning :	SF_o =	1.50	[–]
Safety factor for sliding resistance :	SF_s =	1.50	[–]
Safety factor for bearing capacity :	SF_b =	2.00	[–]
Safety factor for sliding along geo-reinforcement :	SF_{sr} =	1.50	[–]

Geometry of structure

Slope of wall = 0.00 °

No.	Width b [ft]	Height h [ft]	Offset k [ft]	Offs.(L) o_1 [ft]	Offs.(R) o_2 [ft]	Self w. [pcf]	Friction [–]	Cohesion [psf]	Shear bear.cap. R_s [lbf/ft]
6	3.00	1.50	0.50	0.00	0.00	150.00	0.533	0.0	0.00
5	3.00	1.50	0.50	0.00	0.00	150.00	0.533	0.0	0.00
4	3.00	1.50	0.50	0.00	0.00	150.00	0.533	0.0	0.00
3	3.00	1.50	0.50	0.00	0.00	150.00	0.533	0.0	0.00
2	3.00	1.50	0.50	0.00	0.00	150.00	0.533	0.0	0.00
1	3.00	1.50	0.00	0.00	0.00	150.00	-	-	-

Note: Blocks are ordered from bottom to the top

Basic soil parameters

No.	Name	Pattern	φ_{ef} [°]	c_{ef} [psf]	γ [pcf]	γ_{su} [pcf]	δ [°]
1	Gravelly silt (MG), consistency firm		29.00	160.0	121.00	58.50	28.00

All soils are considered as cohesionless for at rest pressure analysis.

Soil parameters

Gravelly silt (MG), consistency firm
Unit weight : γ = 121.0 pcf

[GeoStructural Analysis - Prefab Wall | version 5.16.13.0 | Copyright © 2013 Fine spol. s r.o. All Rights Reserved | www.finesoftware.eu]

Stress-state :	effective	
Angle of internal friction :	φ_{ef} =	29.00 °
Cohesion of soil :	c_{ef} =	160.0 psf
Angle of friction struc.-soil :	δ =	28.00 °
Soil :	cohesionless	
Saturated unit weight :	γ_{sat} =	121.0 pcf

Geological profile and assigned soils

No.	Layer [ft]	Assigned soil	Pattern
1	9.00	Gravelly silt (MG), consistency firm	
2	-	Gravelly silt (MG), consistency firm	

Terrain profile

Terrain behind the structure is flat.

Water influence

GWT behind the structure lies at a depth of 4.00 ft
Uplift in foot. bottom due to different pressures is not considered.

Input surface surcharges

No.	Surcharge new	Surcharge change	Action	Mag.1 [lbf/ft^2]	Mag.2 [lbf/ft^2]	Ord.x x [ft]	Length l [ft]	Depth z [ft]
1	YES		permanent	500.0				on terrain

No.	Name
1	VEHICLE

Resistance on front face of the structure

Resistance on front face of the structure: 1/3 pass., 2/3 at rest
Soil on front face of the structure - Gravelly silt (MG), consistency firm
Angle of friction struc.-soil δ = 28.00 °
Soil thickness in front of structure h = 0.25 ft

Terrain in front of structure is flat.

Settings of the stage of construction

Design situation : permanent

Verification No. 1

Forces acting on construction

Name	F_{hor} [lbf/ft]	App.Pt. z [ft]	F_{vert} [lbf/ft]	App.Pt. x [ft]	Design coefficient
Weight - wall	0.0	-4.50	4050.0	2.75	1.000
FF resistance	-50.2	-0.12	0.0	0.00	1.000
Active pressure	183.8	-1.60	97.7	3.31	1.000
Water pressure	781.2	-1.67	0.0	5.50	1.000
VEHICLE	946.5	-3.59	649.5	4.25	1.000

[GeoStructural Analysis - Prefab Wall | version 5.16.13.0 | Copyright © 2013 Fine spol. s r.o. All Rights Reserved | www.finesoftware.eu]

Verification of complete wall

Check for overturning stability
Resisting moment M_{res} = 14221.5 lbfft/ft
Overturning moment M_{ovr} = 4987.8 lbfft/ft

Safety factor = 2.85 > 1.50
Wall for overturning is SATISFACTORY

Check for slip
Resisting horizontal force H_{res} = 3139.16 lbf/ft
Active horizontal force H_{act} = 1861.41 lbf/ft

Safety factor = 1.69 > 1.50
Wall for slip is SATISFACTORY

Forces acting at the centre of footing bottom
Overall moment M = -2037.8 lbfft/ft
Normal force N = 4797.26 lbf/ft
Shear force Q = 1861.41 lbf/ft

Overall check - WALL is SATISFACTORY

Bearing capacity of foundation soil

Forces acting at the centre of the footing bottom

No.	Moment [lbfft/ft]	Norm. force [lbf/ft]	Shear Force [lbf/ft]	Eccentricity [ft]	Stress [psf]
1	-2037.8	4797.26	1861.41	0.00	1599.1

Bearing capacity of foundation soil check

Eccentricity verification
Max. eccentricity of normal force e = 0.00 in
Maximum allowable eccentricity e_{alw} = 11.88 in

Eccentricity of the normal force is SATISFACTORY

Footing bottom bearing capacity verification
Max. stress at footing bottom σ = 1599.1 psf
Bearing capacity of foundation soil R_d = 4000.0 psf

Safety factor = 2.50 > 2.00
Bearing capacity of foundation soil is SATISFACTORY

Overall verification - bearing capacity of found. soil is SATISFACTORY

[GeoStructural Analysis - Prefab Wall | version 5.16.13.0 | Copyright © 2013 Fine spol. s r.o. All Rights Reserved | www.finesoftware.eu]