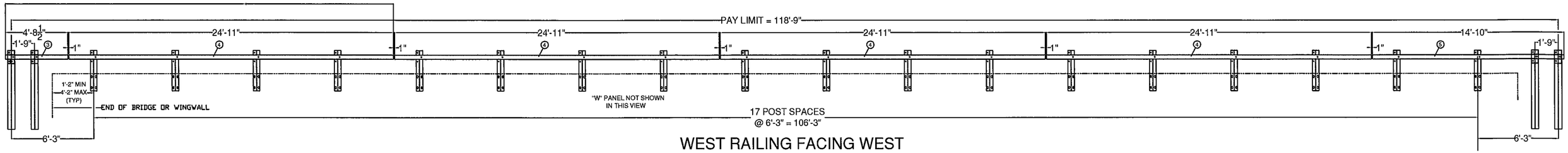

WEST RAILING FACING WEST

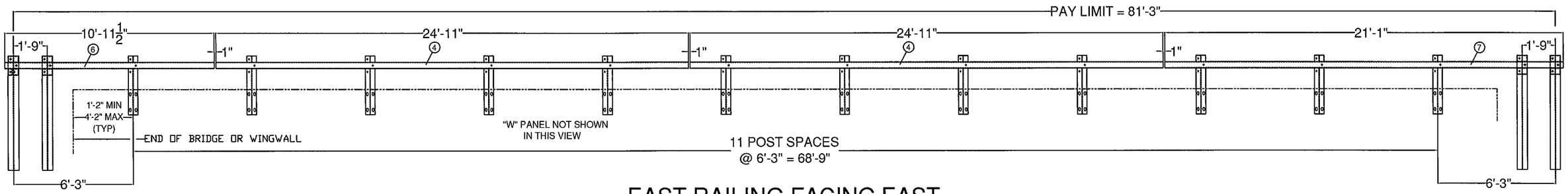

EAST RAILING FACING EAST

NOTES:

1. ALL WORK AND MATERIALS SHALL CONFORM TO SECTION 525.
2. PRIOR TO GALVANIZING THE ASSEMBLED POST, GRIND ALL EDGES TO A MINIMUM RADIUS OF 1/16".
3. ALL POSTS SHALL BE SET NORMAL TO GRADE.
4. SPLICES FOR STEEL BEAM GUARDRAIL SHALL LAP IN THE DIRECTION OF TRAFFIC.
5. A RAILING JOINT SPLICE SHALL BE PROVIDED IN ANY RAIL BAY SPANNING THE END OF AN INTEGRAL ABUTMENT BRIDGE AND AT ALL SUPERSTRUCTURE EXPANSION JOINTS.
6. SEE STANDARD DRAWING G-1 FOR DETAILS OF DELINEATORS. A DELINEATOR SHALL BE LOCATED AT EVERY FIFTH POST. WHITE IS TO BE INSTALLED ON THE DRIVER'S RIGHT. FOR ONE WAY BRIDGES, YELLOW IS TO BE INSTALLED ON THE DRIVERS LEFT.
7. FOR RADII LESS THAN 950 FT, HSS 8X4 TUBES SHALL BE SHOP BENT TO FIT THE APPLICABLE CURVE.
8. HOLES IN RAIL FOR RAIL TUBE ATTACHMENT MAY BE FIELD DRILLED. HOLES SHALL BE COATED WITH AN APPROVED ZINC-RICH PAINT PRIOR TO INSTALLATION.
9. SEE STANDARDS G-1 AND G-1d FOR ADDITIONAL DETAILS CONCERNING GUARDRAIL.

BILL OF MATERIALS

ITEM NUMBER	DET. #	QTY	DESCRIPTION	MATERIAL
0033.90043	1	30	W6x20 FASCIA MOUNTED POST, GALVANIZED, @ 3' 1"	ASTM A572 Gr 345
0033.90044	2	8	W8x24 TRANSITION POST, GALVANIZED, @ 6' 0"	ASTM A572 Gr 345
0033.91112	3	1	TS8x4x3/16" TUBING @ 4'8-1/2" w/WELDED CAP	ASTM A500 Gr B
0033.91113	4	6	TS8x4x3/16" TUBING @ 24'-11"	ASTM A500 Gr B
0033.91114	5	1	TS8x4x3/16" TUBING @ 14'-10" w/WELDED CAP	ASTM A500 Gr B
0033.91115	6	1	TS8x4x3/16" TUBING @ 10'11-1/2" w/WELDED CAP	ASTM A500 Gr B
0033.91116	7	1	TS8x4x3/16" TUBING @ 21'-1" w/WELDED CAP	ASTM A500 Gr B
0033.90045	8	76	TS8x4x3/16" TUBING @ 6"	ASTM A500 Gr B
0033.90046	9	8	C7x12.25 CHANNEL @ 2' 7" (SPLICE)	ASTM A572 Gr 345
0080.15550	10	38	5/8"x10" HEX BOLT	ASTM A325
0080.15595	11	38	5/8"x13" HEX BOLT	ASTM A325
0080.15036	12	108	5/8"x2" HEX BOLT	ASTM A325
0080.15990	13	38	3/16"x1 3/4"x3" SPECIAL WASHER	ASTM A572 Gr 345
0080.15901	14	152	5/8" HEX NUT	ASTM A563
0080.15911	15	336	5/8" FLAT WASHER	ASTM A436
0080.18960	16	120	1/4"x2"x5" PLATE WASHER	ASTM A572 Gr 345
6043.00012	17	17	10 GAUGE "W" BEAM @ 12' 6"	AASHTO M180-Cl B, TYPE II
0080.05020	18	144	5/8"x1-1/4" SPLICE BOLT/RECESSED NUT (PANEL ASS'Y)	ASTM A307
0080.18851	19	60	ø 1", 10" x 12" "U" ANCHORS	ASTM A449
0080.18901	20	240	1" HEX NUT	ASTM A563
0080.18911	21	120	1" FLAT WASHER	ASTM F436
XXX	22	9	DELINEATOR	ALUMINUM

ITEM #: 900.640

SOLD TO: F.R. LAFAYETTE (PO#28720)

SHEET 1 OF 2

APPROVED BY:

SPECIAL PROVISION BRIDGE RAIL, GALV. HDSB/FM/ST

BRATTLEBORO BRO 1442 (35) TH 12, CLASS III (LOCAL ROAD), BRIDGE NO. 7
TOWN OF BRATTLEBORO, COUNTY OF WINDHAM, VERMONT

R	NO.	DATE	DESCRIPTION	BY	R	NO.	DATE	DESCRIPTION	BY
E	1	5/23/14	REVISED PER 5/22/14 MARK-UP	EP	E				
V	2	6/18/14	REVISED PER 6/12/14 MARK-UP	EP	V				

ELDERLEE, INC.
OAKS CORNERS, NEW YORK 14518
E-Mail: dlong@elderlee.com
Tel: 315-789-6670 Fax: 315-789-6615

AISC CERTIFIED FABRICATOR

DRAWN	D.L.	05/07/2014
CHECKED	E.P.	05/07/2014
APPROVED	.	.
SCALE	SCHEMATIC	
DRAWING NO.	FRL BRATTLEBORO	

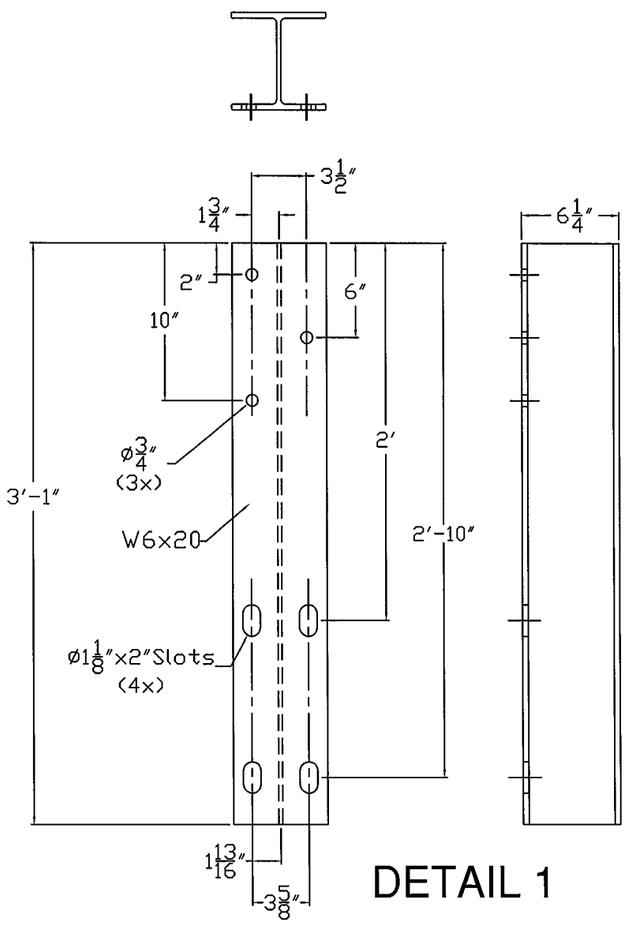

DETAIL 1

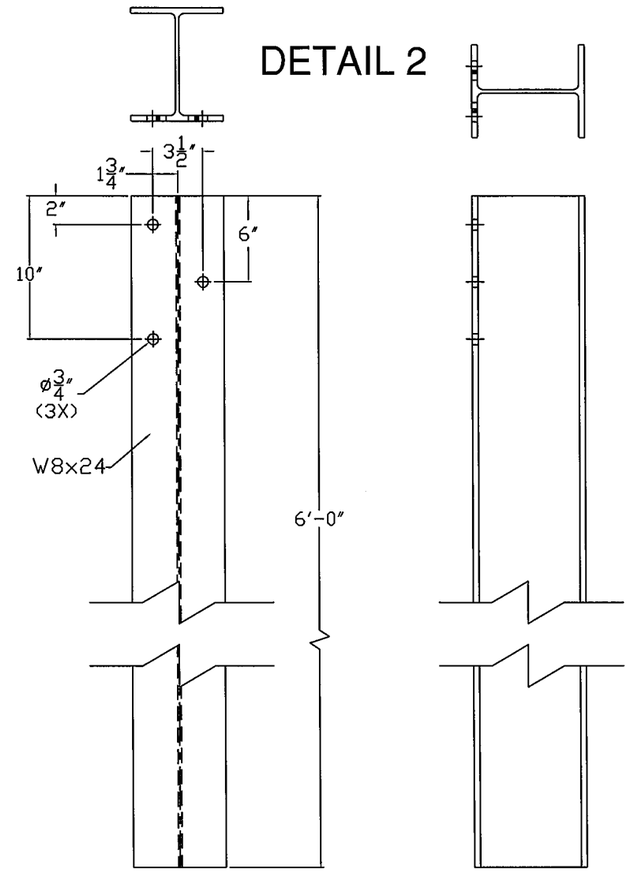

DETAIL 2

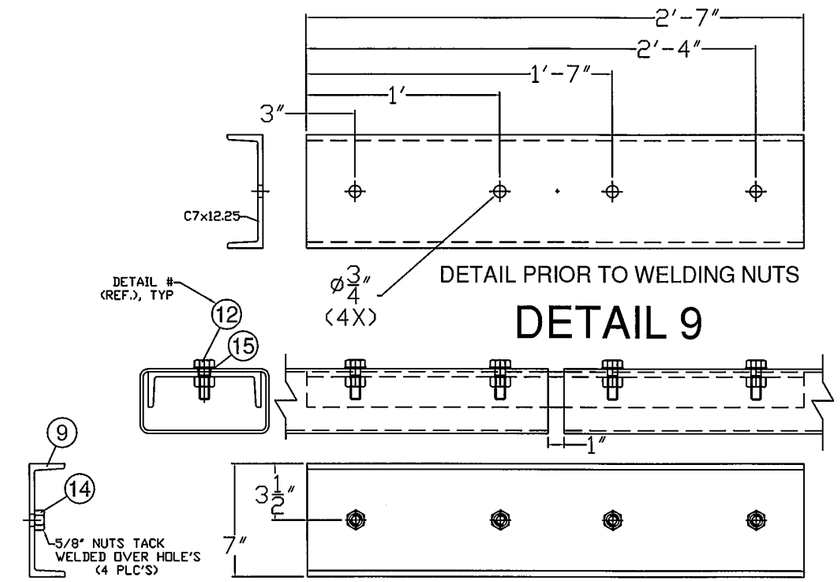

RAIL SPLICE HOLES
(HARDWARE NOT SHOWN FOR CLARITY)

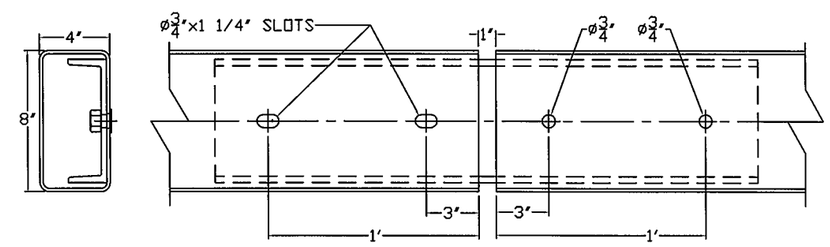

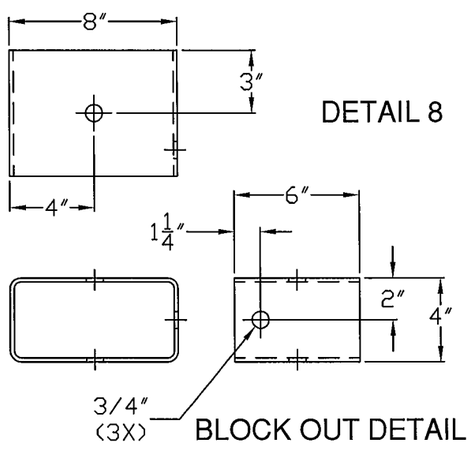

DETAIL 8

BLOCK OUT DETAIL

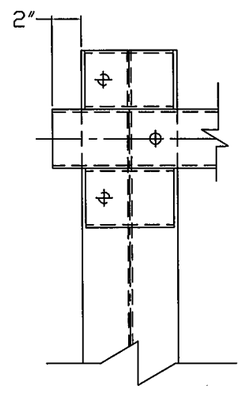

Last Post/Rail Detail

DETAIL 13

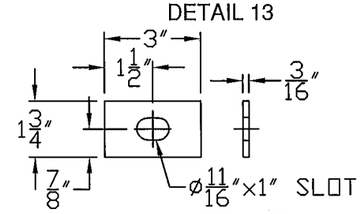

SPECIAL WASHER DETAIL

DETAIL 16

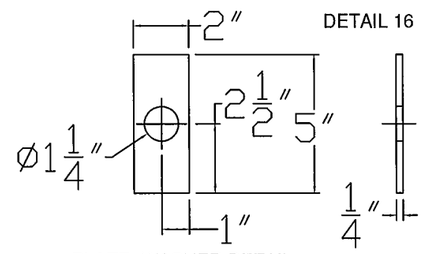

PLATE WASHER DETAIL

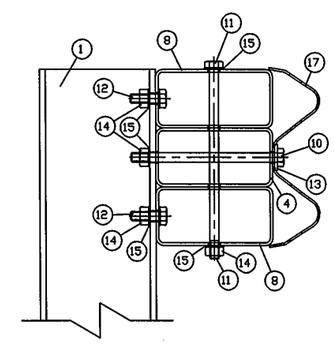

ITEM #: 900.640

SOLD TO: F.R. LAFAYETTE (PO#28720)

SHEET 2 OF 2

APPROVED BY:

SPECIAL PROVISION BRIDGE RAIL, GALV. HDSB/FM/ST

BRATTLEBORO BRO 1442 (35) TH 12, CLASS III (LOCAL ROAD), BRIDGE NO. 7
TOWN OF BRATTLEBORO, COUNTY OF WINDHAM, VERMONT

R	NO.	DATE	DESCRIPTION	BY	R	NO.	DATE	DESCRIPTION	BY
E	1	5/23/14	REVISED PER 5/22/14 MARK-UP	EP	E				
V	2	6/18/14	REVISED PER 6/12/14 MARK-UP	EP	V				

ELDERLEE, INC.
OAKS CORNERS, NEW YORK 14518
E-Mail: dlong@elderlee.com
Tel: 315-789-6670 Fax: 315-789-6615

AISC CERTIFIED FABRICATOR

DRAWN	D.L.	05/07/2014
CHECKED	E.P.	05/07/2014
APPROVED	.	.
SCALE	SCHEMATIC	
DRAWING NO.	FRL BRATTLEBORO	