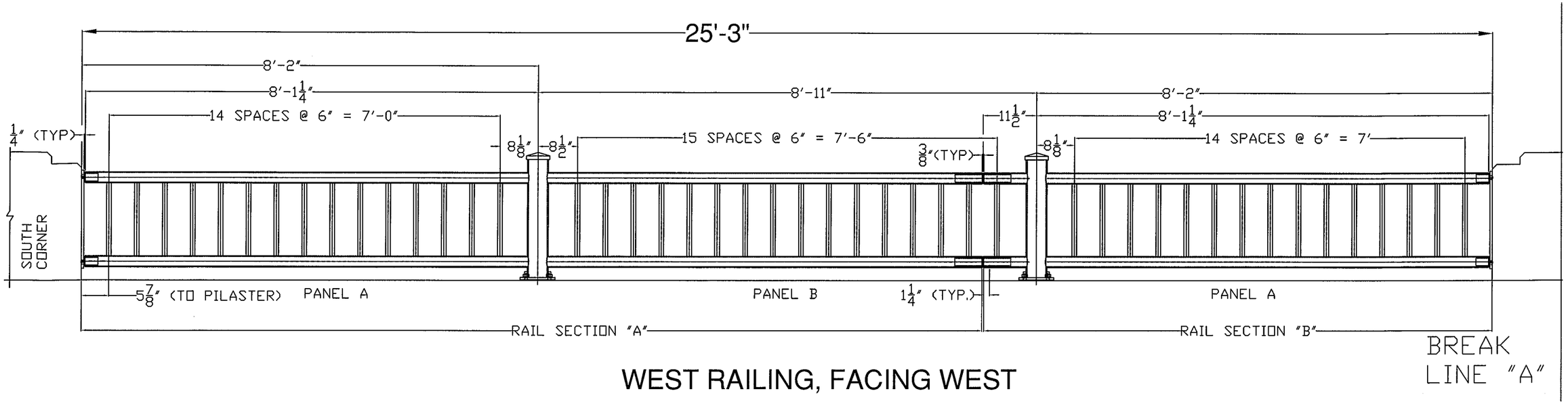

WEST RAILING, FACING WEST

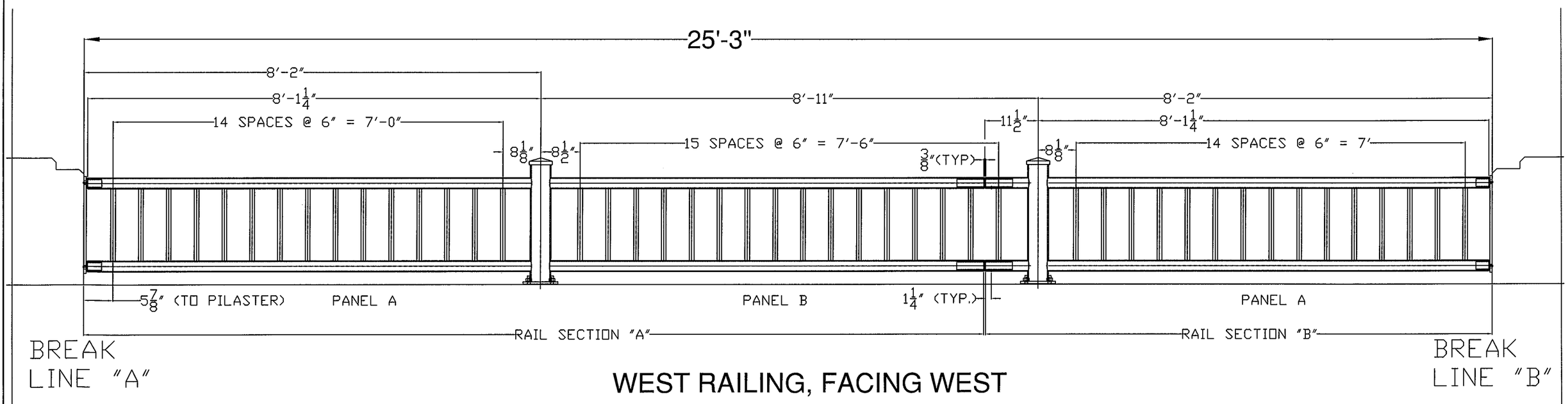

WEST RAILING, FACING WEST

BRIDGE RAIL NOTES

1. ALL DIMENSIONS TO FACE OF CONCRETE UNLESS NOTED OTHERWISE.
2. RAIL POSTS SHALL BE SET NORMAL TO GRADE.
3. PAYMENT SHALL BE MADE UNDER PAY ITEM 900.640 SPECIAL PROVISION (BRIDGE RAILING, GALVANIZED METAL HAND RAILING/CONCRETE PARAPET COMBINATION).
4. REINFORCING STEEL SHALL CONFORM TO SECTION 507 FOR LEVEL II REINFORCMENT. PAYMENT SHALL BE MADE UNDER PAY ITEM SPECIAL PROVISION (BRIDGE RAILING, GALVANIZED METAL HAND RAILING/CONCRETE PARAPET COMBINATION).
5. METAL HAND RAILING, TO INCLUDE STEEL PIPES, PLATES AND HARDWARE, SHALL BE PAID FOR UNDER ITEM SPECIAL PROVISION(BRIDGE RAILING, GALVANIZED METAL HAND RAILING/CONCRETE PARAPET COMBINATION).
6. STEEL PIPES FOR POSTS, TOP AND BOTTOM RAIL AND PALINGS SHALL BE SEAMLESS, CONFORMING TO SUBSECTION 732.01.
7. STEEL FOR BASE AND ANCHORAGE PLATES SHALL CONFORM TO SUBSECTION 732.03(b).
8. HARDWARE FOR ANCHOR BOLT ASSEMBLIES SHALL CONFORM TO SUBSECTION 732.03(d).
9. 1/8" PAD SHALL CONFORM TO SUBSECTION 731.01 OR 731.02.
10. ALL EXPOSED CUT OR SHEARED EDGES OF STEEL COMPONENTS SHALL BE ROUNDED TO A 1/16" RADIUS AND BE FREE OF BURRS.
11. ALL PARTS SHALL BE GALVANIZED AFTER FABRICATION IN ACCORDANCE WITH AASHTO M 111M/M 111 (ASTM A123), EXCEPT HARDWARE, WHICH SHALL MEET THE REQUIREMENTS OF AASHTO M 232M/M 232(ASTM A153).
12. ALL PARTS EXCEPT HARDWARE AND ANCHORAGE PLATES SHALL BE PAINTED BLACK (COLOR CHIP #27038).
13. RAIL POST ANCHORING NUTS SHALL BE TIGHTENED TO A SNUG FIT AND GIVEN AN ADDITIONAL ONE-EIGHTH TURN.
14. THE FABRICATOR SHALL SUBMIT FABRICATION DRAWINGS INCLUDING WELDING PROCEDURES FOR METAL HAND RAILING IN ACCORDANCE WITH SECTION 105.

Vermont Agency of Transportation
Brattleboro BR 2000 (26) - Bridge Rail Summer_Sharpest_Fit
RECEIVED
ON: May 9, 2016
and Checked for
CONFORMANCE
BY: Jennifer Fitch DATE: 05/18/2016

SHOP DRAWING REVIEW

☐ REVIEWED AS REQUIRED BY THE CONSTRUCTION CONTRACT DOCUMENTS AND APPROVED, BUT ONLY FOR CONFORMANCE TO THE DESIGN CONCEPT OF THE WORK, AND SUBJECT TO FURTHER LIMITATIONS AND REQUIREMENTS CONTAINED IN THE CONSTRUCTION CONTRACT DOCUMENTS.
☐ REJECTED ☒ REVISE AND RESUBMIT ☐ APPROVED AS NOTED

CORRECTIONS OR COMMENTS MADE ON THE SHOP DRAWINGS DURING THIS REVIEW DID NOT RELIEVE CONTRACTOR FROM COMPLIANCEWITH REQUIREMENTS OF THE DRAWINGS AND SPECIFICATIONS. THIS CHECK IS ONLY FOR REVIEW OF GENERAL CONFORMANCE WITH THE DESIGN CONCEPT OF THE PROJECT AND GENERAL COMPLIANCE WITH THE INFORMATION GIVEN IN THE CONTRACT DOCUMENTS. THE CONTRACTOR IS RESPONSIBLE FOR: CONFIRMING AND CORRELATING ALL QUANTITIES AND DIMENSIONS; SELECTING FABRICATION PROCESSES AND TECHNIQUES OF CONSTRUCTION; COORDINATING THEIR WORK WITH THAT OF ALL OTHER TRADES; AND PERFORMING THEIR WORK IN A SAFE AND SATISFACTORY MANNER.

CLD Consulting Engineers
540 Commercial Street
Manchester, NH 03101
603-668-8223

Job Number: 150223
Reviewed by: SRB
Date: 05/18/2016

ITEM #: 900.640

SHEET 1 OF 5

APPROVED BY:

BRIDGE RAIL DETAILS SHEET

BRATTLEBORO BR 2000 (26)
VERMONT

REV	NO.	DATE	DESCRIPTION	BY	REV	NO.	DATE	DESCRIPTION	BY

ELDERLEE, INC.
OAKS CORNERS, NEW YORK 14518
E-Mail: dlong@elderlee.com
Tel: 315-789-6670 Fax: 315-789-6615

AISC CERTIFIED FABRICATOR

DRAWN	E.P.	5/4/16
CHECKED	D.L.	5/4/16
APPROVED	.	.
SCALE	SCHEMATIC	
DRAWING NO.	F.R. LAFAYETTE-BATTLEBORO (26)	

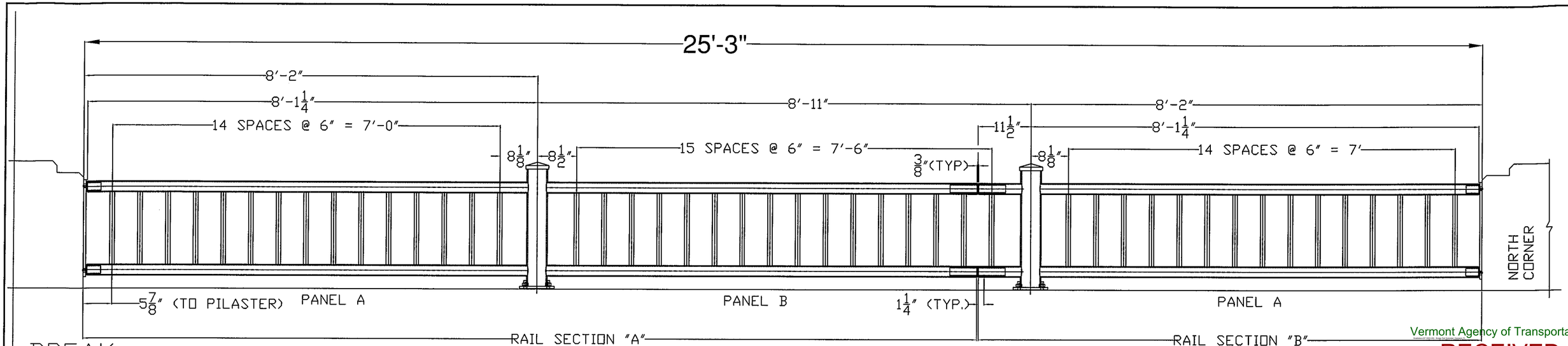

BREAK LINE "B"

WEST RAILING, FACING WEST

Vermont Agency of Transportation
RECEIVED
ON: May 9, 2016
and Checked for
CONFORMANCE
BY: Jennifer Fitch DATE: 05/18/2016

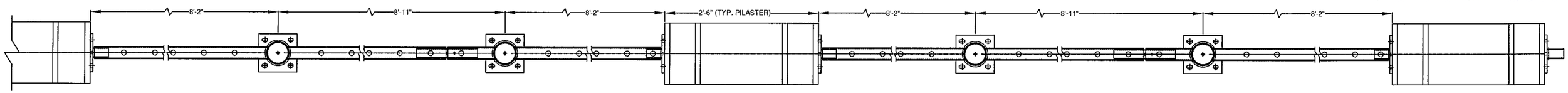

SOUTH CORNER

PLAN VIEW OF A SECTION OF THE WEST RAIL

VERIFY CIRCLED QUANTITIES

ARE THE POST BASE PLATES INCLUDED IN THE RAIL SECTIONS? VERIFY INCLUDED IN BOM.

BILL OF MATERIAL

ITEM	QTY	DESCRIPTION	ASTM DESIGNATION
1	5	RAIL SECTION "A"	A500/A53 Grade B/A36
2	6	RAIL SECTION "B"	A500/A53 Grade B/A36
3	1	RAIL SECTION "C"	A500/A53 Grade B/A36
4	12	RAIL SPLICE (1 1/2" SCHEDULE 40)	A500/A53 Grade B
5	12	ø3/8" X 1/2" SOCKET, BUTTON HEAD CAP SCREW	A307 (ZINC PLATED - IMPORTS)
6	12	POST ANCHOR PLATES, 1/8" X 7 1/2" X 7 1/2"	A36
7	12	SIDE ANCHOR PLATES, 1/8" X 7 1/2" X 1'-9"	A36
8	12	SIDE BASE PLATES, 1/2" X 7 1/2" X 1'-9"	A36
9	*100	ø 5/8" X 10" FULLY THREADED ANCHOR STUDS	A449
10	100	ø 5/8" HEX JAM NUTS	A563
11	202	ø 5/8" HEAVY HEX NUTS	A563
12	302	ø 5/8" FLAT WASHERS	F436
13	12	1/8" X 7 1/2" X 7 1/2" POST BEARING PAD	AASHTO M251
14	2	"W" PANEL TERMINAL CONNECTOR, 10 Ga.	AASHTO M180
15	2	CONNECTION PLATE W/ 1" SCHED. 40 PIPE	A500/A53 Grade B/A36
16	16	ø 5/8" PANEL BOLTS, NUTS (WASHERS?)	A307
17	8	ø 7/8" X 12" FULLY THREADED ANCHOR STUDS	A449
18	16	ø 7/8" HEAVY HEX NUTS	A563
19	16	ø 7/8" FLAT WASHERS	F436

* - TWO ADDITIONAL FOR Vtrans QA TESTING

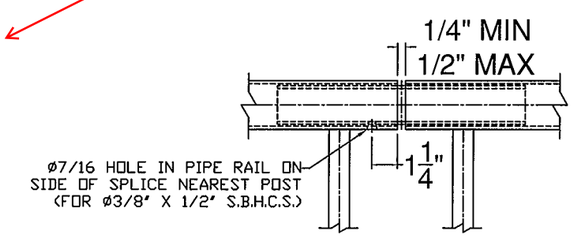

RAIL SPLICE DETAIL

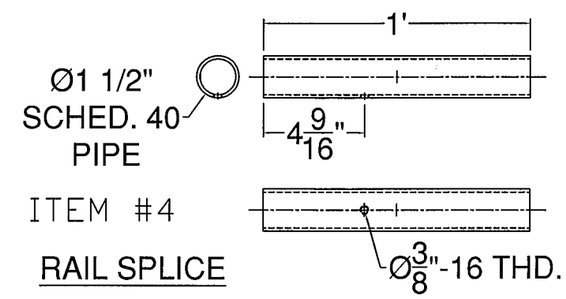

ITEM #4

RAIL SPLICE

SHOP DRAWING REVIEW

☐ REVIEWED AS REQUIRED BY THE CONSTRUCTION CONTRACT DOCUMENTS AND APPROVED, BUT ONLY FOR CONFORMANCE TO THE DESIGN CONCEPT OF THE WORK, AND SUBJECT TO FURTHER LIMITATIONS AND REQUIREMENTS CONTAINED IN THE CONSTRUCTION CONTRACT DOCUMENTS.

☐ REJECTED ☒ REVISE AND RESUBMIT ☐ APPROVED AS NOTED

CORRECTIONS OR COMMENTS MADE ON THE SHOP DRAWINGS DURING THIS REVIEW DID NOT RELIEVE CONTRACTOR FROM COMPLIANCEWITH REQUIREMENTS OF THE DRAWINGS AND SPECIFICATIONS. THIS CHECK IS ONLY FOR REVIEW OF GENERAL CONFORMANCE WITH THE DESIGN CONCEPT OF THE PROJECT AND GENERAL COMPLIANCE WITH THE INFORMATION GIVEN IN THE CONTRACT DOCUMENTS. THE CONTRACTOR IS RESPONSIBLE FOR: CONFIRMING AND CORRELATING ALL QUANTITIES AND DIMENSIONS; SELECTING FABRICATION PROCESSES AND TECHNIQUES OF CONSTRUCTION; COORDINATING THEIR WORK WITH THAT OF ALL OTHER TRADES; AND PERFORMING THEIR WORK IN A SAFE AND SATISFACTORY MANNER.

CLD Consulting Engineers
540 Commercial Street
Manchester, NH 03101
603-668-8223

Job Number: 150223
Reviewed by: SRB
Date: 05/18/2016

ITEM #: 900.640

SHEET 2 OF 5

APPROVED BY:

BRIDGE RAIL DETAILS SHEET

BRATTLEBORO BR 2000 (26)
VERMONT

REV	NO.	DATE	DESCRIPTION	BY	REV	NO.	DATE	DESCRIPTION	BY

ELDERLEE, INC.
OAKS CORNERS, NEW YORK 14518
E-Mail: dlong@elderlee.com
Tel: 315-789-6670 Fax: 315-789-6615

AISC CERTIFIED FABRICATOR

DRAWN	E.P.	5/4/16
CHECKED	D.L.	5/4/16
APPROVED	.	.
SCALE	SCHEMATIC	

DRAWING NO. F.R. LAFAYETTE-BATTLEBORO (26)

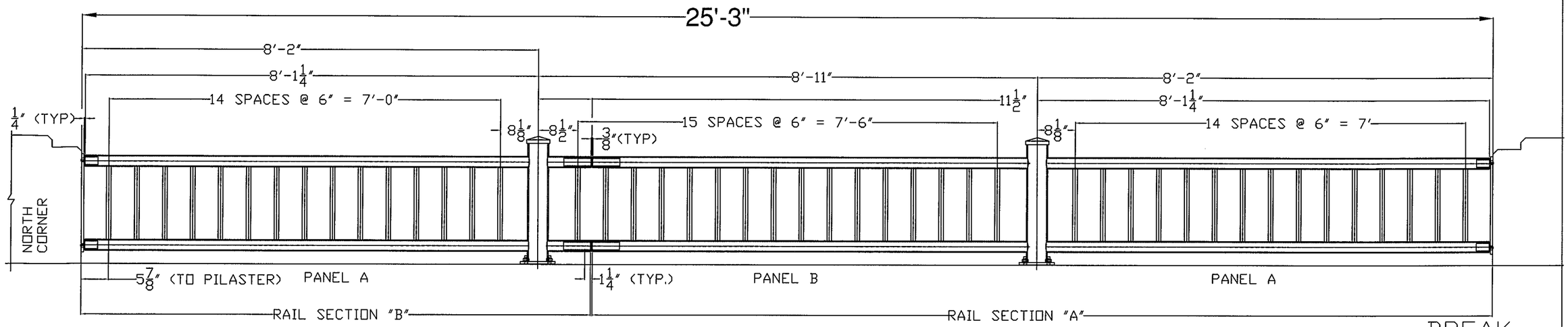

EAST RAILING, FACING EAST

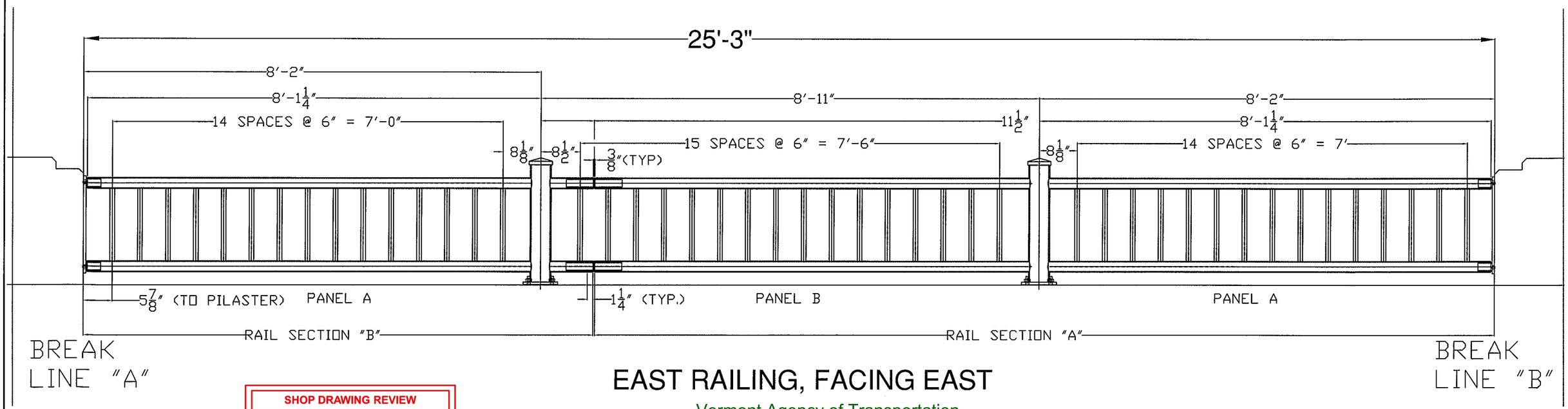

EAST RAILING, FACING EAST

SHOP DRAWING REVIEW

☐ REVIEWED AS REQUIRED BY THE CONSTRUCTION CONTRACT DOCUMENTS AND APPROVED, BUT ONLY FOR CONFORMANCE TO THE DESIGN CONCEPT OF THE WORK, AND SUBJECT TO FURTHER LIMITATIONS AND REQUIREMENTS CONTAINED IN THE CONSTRUCTION CONTRACT DOCUMENTS.

☐ REJECTED ☒ REVISE AND RESUBMIT ☐ APPROVED AS NOTED

CORRECTIONS OR COMMENTS MADE ON THE SHOP DRAWINGS DURING THIS REVIEW DID NOT RELIEVE CONTRACTOR FROM COMPLIANCEWITH REQUIREMENTS OF THE DRAWINGS AND SPECIFICATIONS. THIS CHECK IS ONLY FOR REVIEW OF GENERAL CONFORMANCE WITH THE DESIGN CONCEPT OF THE PROJECT AND GENERAL COMPLIANCE WITH THE INFORMATION GIVEN IN THE CONTRACT DOCUMENTS. THE CONTRACTOR IS RESPONSIBLE FOR: CONFIRMING AND CORRELATING ALL QUANTITIES AND DIMENSIONS: SELECTING FABRICATION PROCESSES AND TECHNIQUES OF CONSTRUCTION: COORDINATING THEIR WORK WITH THAT OF ALL OTHER TRADES: AND PERFORMING THEIR WORK IN A SAFE AND SATISFACTORY MANNER.

CLD Consulting Engineers
540 Commercial Street
Manchester, NH 03101
603-668-8223

Job Number: 150223
Reviewed by: SRB
Date: 05/18/2016

Vermont Agency of Transportation

Brattleboro BR 2000 (26) - Bridge Rail Submittal_Stamped_FR

RECEIVED

ON: May 9, 2016

and Checked for

CONFORMANCE

BY: Jennifer Fitch DATE: 05/18/2016

ITEM #: 900.640

APPROVED BY:

SHEET 3 OF 5

BRIDGE RAIL DETAILS SHEET

BRATTLEBORO BR 2000 (26)
VERMONT

REV	NO.	DATE	DESCRIPTION	BY	REV	NO.	DATE	DESCRIPTION	BY

ELDERLEE, INC.
OAKS CORNERS, NEW YORK 14518
E-Mail: dlong@elderlee.com
Tel: 315-789-6670 Fax: 315-789-6615

AISC CERTIFIED FABRICATOR

DRAWN	E.P.	5/4/16
CHECKED	D.L.	5/4/16
APPROVED	.	.
SCALE	SCHEMATIC	

DRAWING NO. F.R. LAFAYETTE-BATTLEBORO (26)

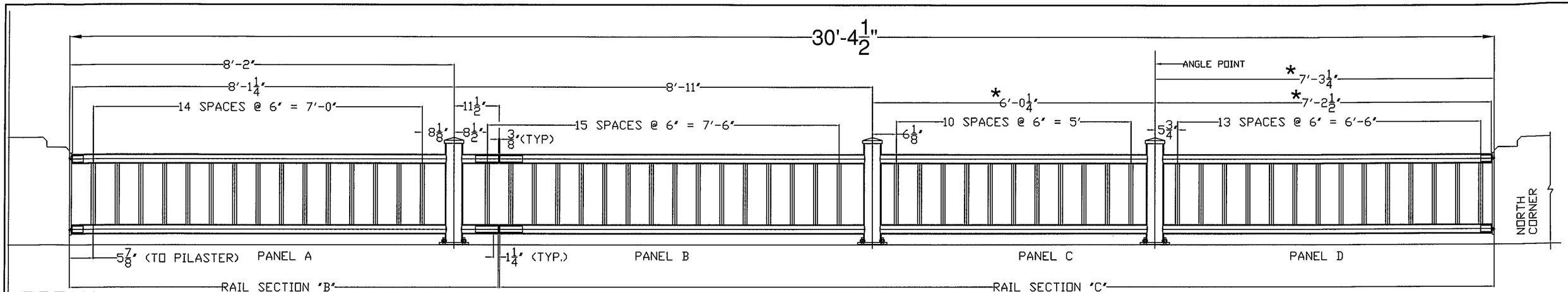

BREAK LINE "B"

*- FIELD VERIFY DIMENSIONS

EAST RAILING, FACING EAST

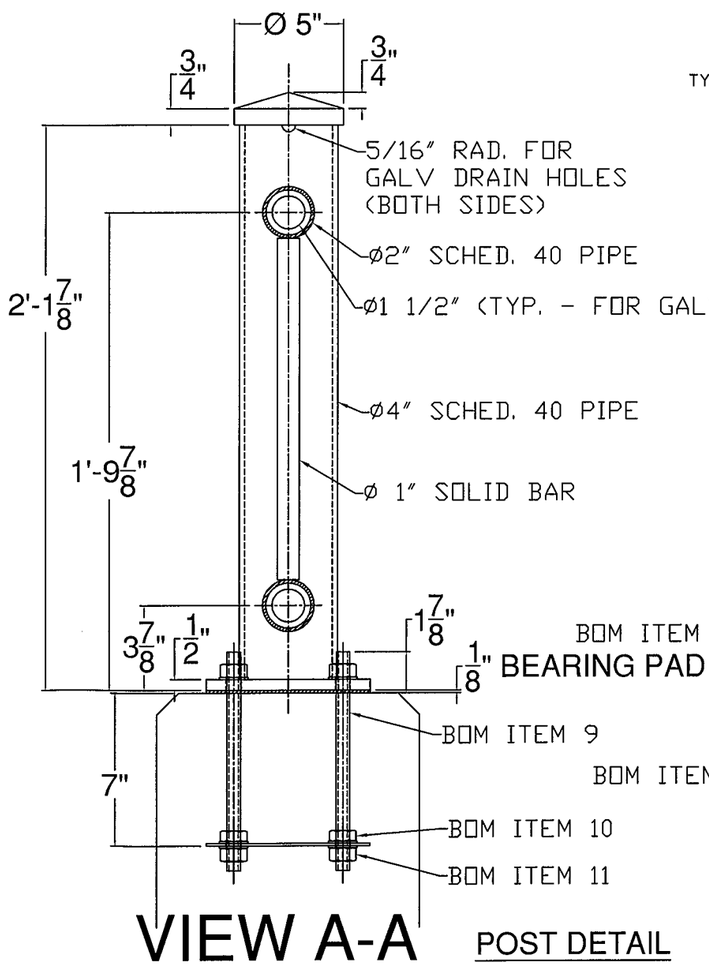

VIEW A-A

POST DETAIL

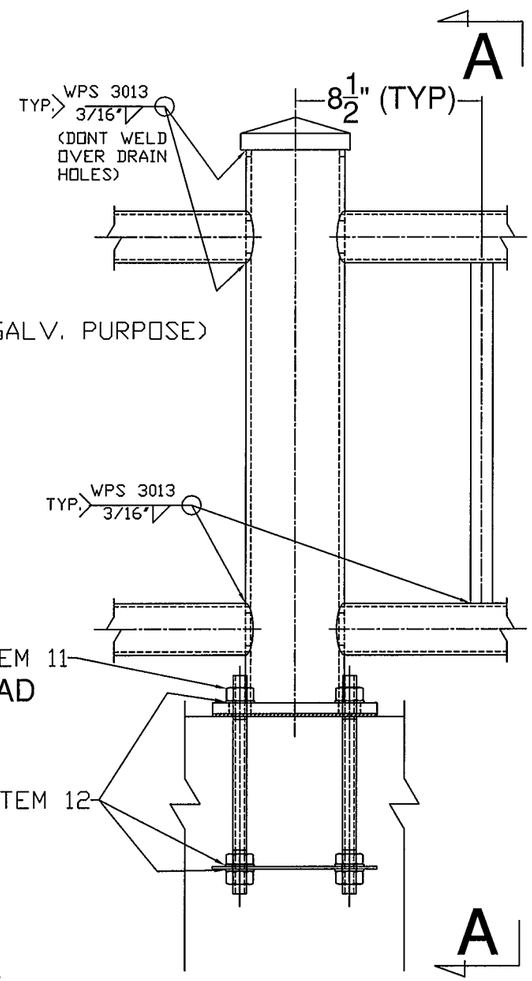

Vermont Agency of Transportation

RECEIVED

ON: May 9, 2016

and Checked for

CONFORMANCE

BY: Jennifer Fitch DATE: 05/18/2016

*- FIELD VERIFY DIMENSIONS

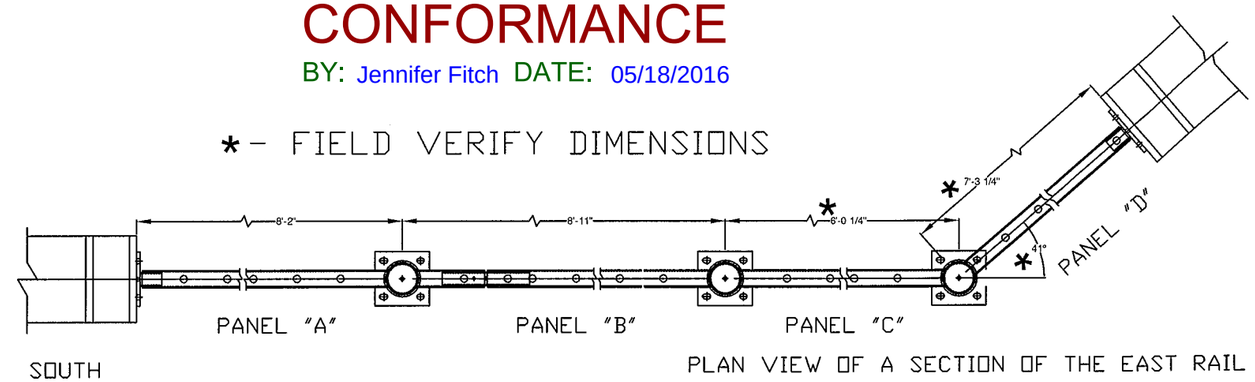

PLAN VIEW OF A SECTION OF THE EAST RAIL

SHOP DRAWING REVIEW

☐ REVIEWED AS REQUIRED BY THE CONSTRUCTION CONTRACT DOCUMENTS AND APPROVED, BUT ONLY FOR CONFORMANCE TO THE DESIGN CONCEPT OF THE WORK, AND SUBJECT TO FURTHER LIMITATIONS AND REQUIREMENTS CONTAINED IN THE CONSTRUCTION CONTRACT DOCUMENTS.

☐ REJECTED ☒ REVISE AND RESUBMIT ☐ APPROVED AS NOTED

CORRECTIONS OR COMMENTS MADE ON THE SHOP DRAWINGS DURING THIS REVIEW DID NOT RELIEVE CONTRACTOR FROM COMPLIANCEWITH REQUIREMENTS OF THE DRAWINGS AND SPECIFICATIONS. THIS CHECK IS ONLY FOR REVIEW OF GENERAL CONFORMANCE WITH THE DESIGN CONCEPT OF THE PROJECT AND GENERAL COMPLIANCE WITH THE INFORMATION GIVEN IN THE CONTRACT DOCUMENTS. THE CONTRACTOR IS RESPOINSIBLE FOR: CONFIRMING AND CORRELATING ALL QUANTITIES AND DIMENSIONS: SELECTING FABRICATION PROCESSES AND TECHNIQUES OF CONSTRUCTION: COORDINATING THEIR WORK WITH THAT OF ALL OTHER TRADES: AND PERFORMING THEIR WORK IN A SAFE AND SATISFACTORY MANNER.

CLD Consulting Engineers
540 Commercial Street
Manchester, NH 03101
603-668-8223

Job Number: 150223
Reviewed by: SRB
Date: 05/18/2016

ITEM #: 900.640

APPROVED BY:

SHEET 4 OF 5

BRIDGE RAIL DETAILS SHEET

BRATTLEBORO BR 2000 (26)

VERMONT

REV	NO.	DATE	DESCRIPTION	BY	REV	NO.	DATE	DESCRIPTION	BY

ELDERLEE, INC.
OAKS CORNERS, NEW YORK 14518
E-Mail: dlong@elderlee.com
Tel: 315-789-6670 Fax: 315-789-6615

AISC CERTIFIED FABRICATOR

DRAWN	E.P.	5/4/16
CHECKED	D.L.	5/4/16
APPROVED	.	.
SCALE	SCHEMATIC	

DRAWING NO. F.R. LAFAYETTE-BATTLEBORO (26)

Vermont Agency of Transportation

Brattleboro BR 2000 (26) - Bridge Rail Submittal_Stamped_.Pdf

RECEIVED
ON: May 9, 2016
and Checked for
CONFORMANCE
BY: Jennifer Fitch DATE: 05/18/2016

SHOP DRAWING REVIEW

☐ REVIEWED AS REQUIRED BY THE CONSTRUCTION CONTRACT DOCUMENTS AND APPROVED, BUT ONLY FOR CONFORMANCE TO THE DESIGN CONCEPT OF THE WORK, AND SUBJECT TO FURTHER LIMITATIONS AND REQUIREMENTS CONTAINED IN THE CONSTRUCTION CONTRACT DOCUMENTS.

☐ REJECTED ☒ REVISE AND RESUBMIT ☐ APPROVED AS NOTED

CORRECTIONS OR COMMENTS MADE ON THE SHOP DRAWINGS DURING THIS REVIEW DID NOT RELIEVE CONTRACTOR FROM COMPLIANCEWITH REQUIREMENTS OF THE DRAWINGS AND SPECIFICATIONS. THIS CHECK IS ONLY FOR REVIEW OF GENERAL CONFORMANCE WITH THE DESIGN CONCEPT OF THE PROJECT AND GENERAL COMPLIANCE WITH THE INFORMATION GIVEN IN THE CONTRACT DOCUMENTS. THE CONTRACTOR IS RESPONSIBLE FOR: CONFIRMING AND CORRELATING ALL QUANTITIES AND DIMENSIONS: SELECTING FABRICATION PROCESSES AND TECHNIQUES OF CONSTRUCTION: COORDINATING THEIR WORK WITH THAT OF ALL OTHER TRADES: AND PERFORMING THEIR WORK IN A SAFE AND SATISFACTORY MANNER.

CLD Consulting Engineers
540 Commercial Street
Manchester, NH 03101
603-668-8223

Job Number: 150223
Reviewed by: SRB
Date: 05/18/2016

IS THIS INCLUDED IN THE RAIL SECTIONS ON THE BOM? PLEASE VERIFY.

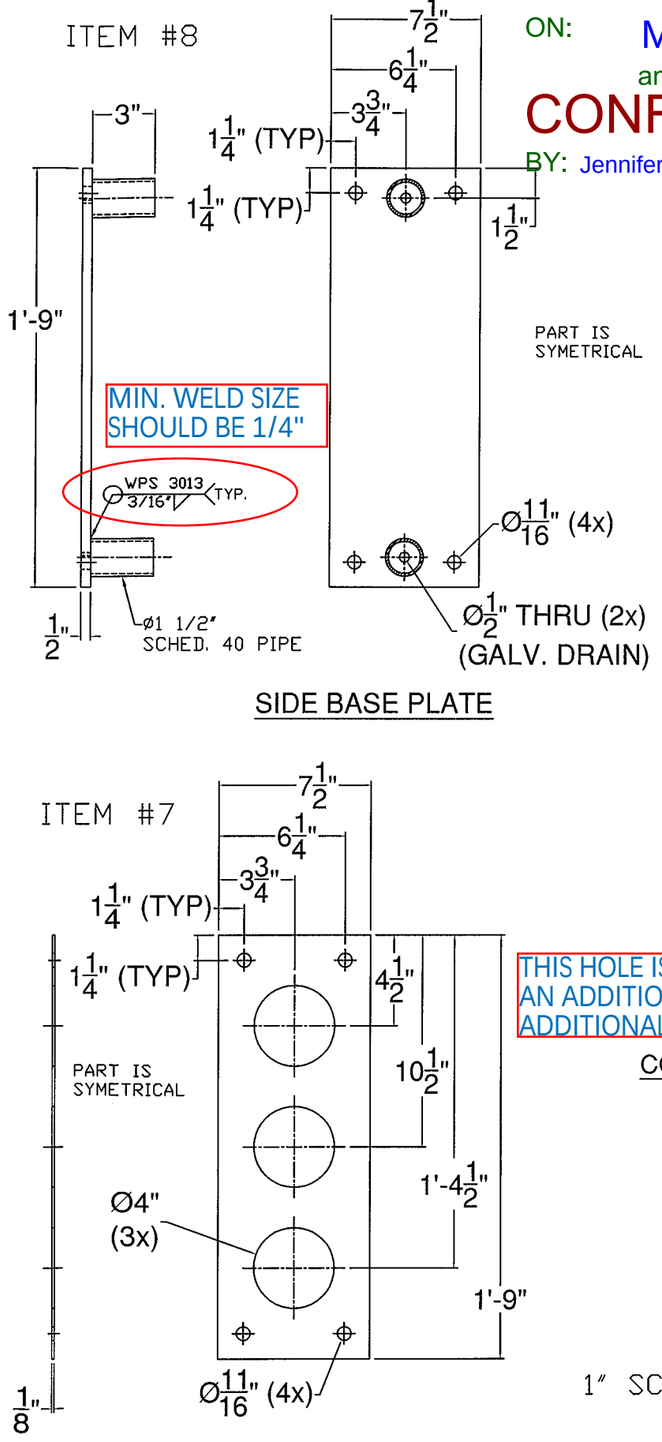

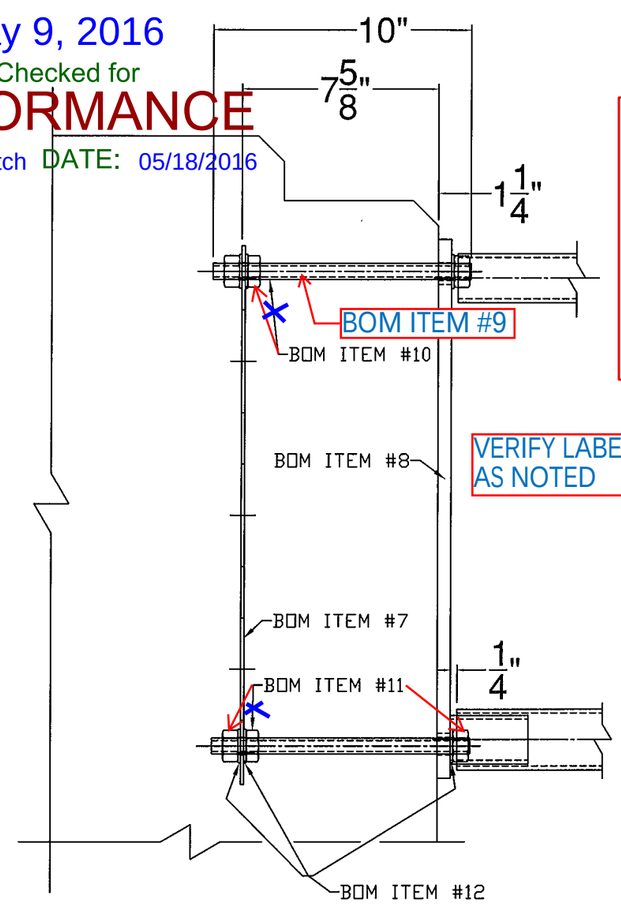

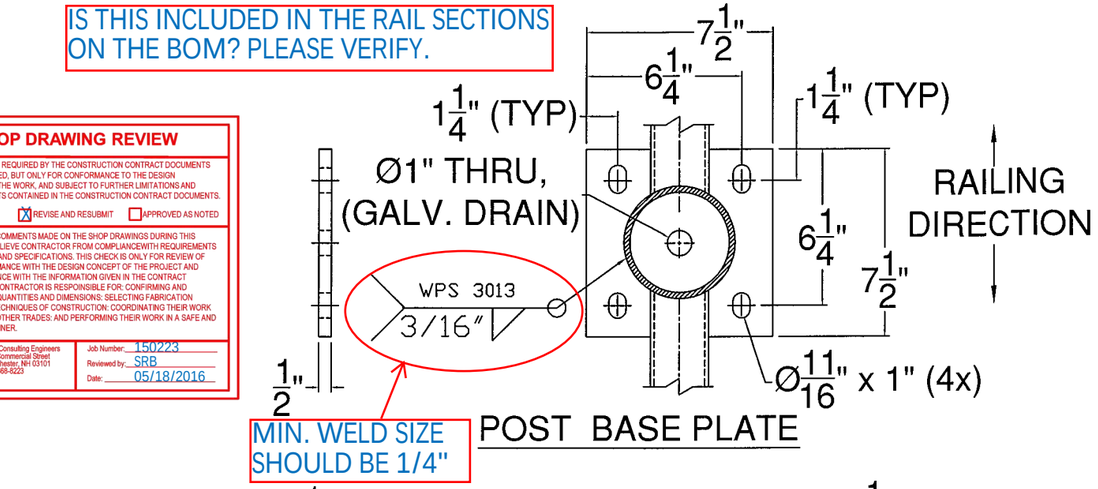

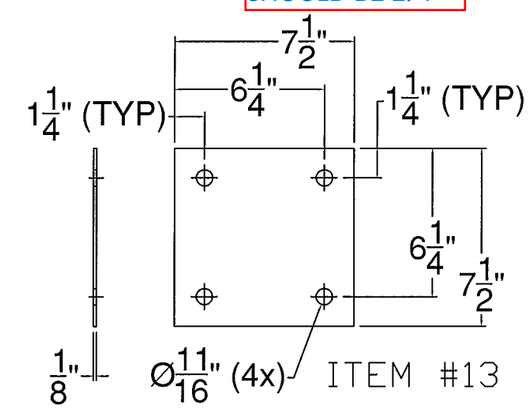

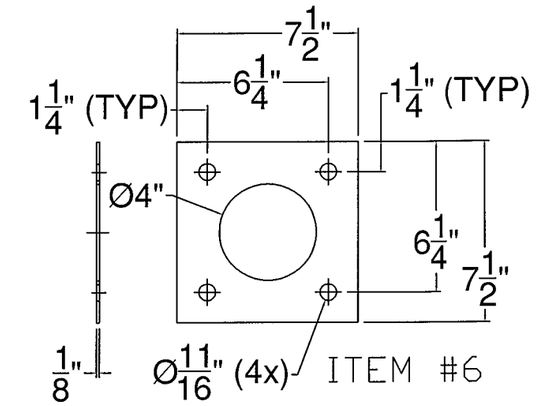

THIS HOLE IS NOT SHOWN ON CONTRACT PLANS, AND THE BOM DOES NOT APPEAR TO INCLUDE AN ADDITIONAL BOLT TO ACCOUNT FOR THIS HOLE. EITHER REMOVE ADDITIONAL HOLE OR ADD ADDITIONAL BOLT.

THE BOM DOES NOT APPEAR TO INCLUDE A BOLT FOR THIS HOLE.

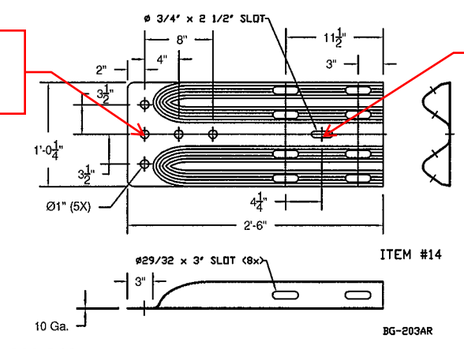

CONNECTION PLATE DETAIL

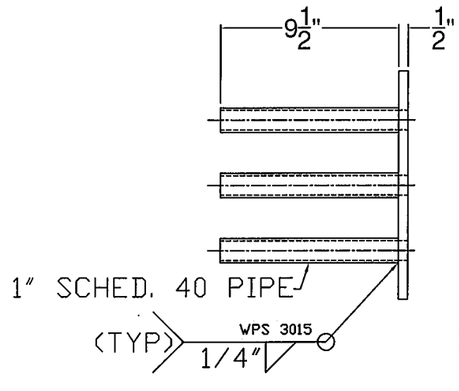

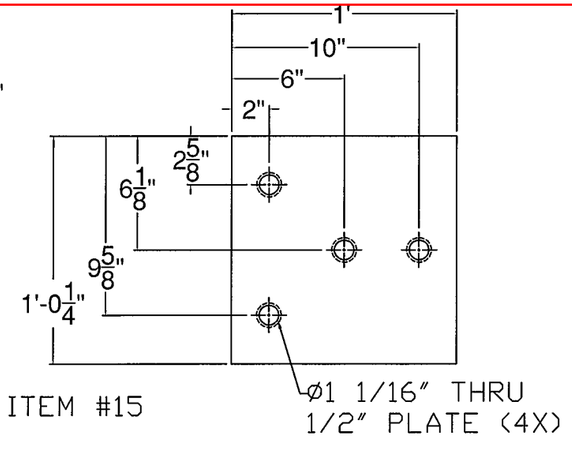

ITEM #: 900.640

SHEET 5 OF 5

APPROVED BY:

BRIDGE RAIL DETAILS SHEET
BRATTLEBORO BR 2000 (26)
VERMONT

REV	NO.	DATE	DESCRIPTION	BY	REV	NO.	DATE	DESCRIPTION	BY

ELDERLEE, INC.
OAKS CORNERS, NEW YORK 14518
E-Mail: dlong@elderlee.com
Tel: 315-789-6670 Fax: 315-789-6615

AISC CERTIFIED FABRICATOR

DRAWN	E.P.	5/4/16
CHECKED	D.L.	5/4/16
APPROVED	.	.
SCALE	SCHEMATIC	

DRAWING NO. F.R. LAFAYETTE-BATTLEBORO (26)

WELDING PROCEDURE SPECIFICATION

Material Specification	ASTM-A500-A53-GRADE B TO A36
Welding Process	FCAW
Manual or Machine	SEMAUTOMATIC
Position of Welding	5G
Filler Metal Specification	A5.20
Filler Metal Classification	E71T-1/T-1M ESAB DUAL SHIELD 7000
Flux	N/A
Shielding Gas	CO 2 Dew Point -40DEG F FLOW RATE 50 CFH
Single or Multiple Pass	SINGLE
Single or Multiple Arc	SINGLE
Welding Current	DC
Polarity	REVERSE ELECTRODE POSITIVE
Welding Progression	STRINGER
Root Treatment	PER D1.1
Preheat and Interpass Temperature	PER D1.1
Postheat Temperature	NONE
Heat Input	Min Max

ALTHOUGH THIS IS HANDRAIL, AS IT IS PART OF THE BRIDGE RAIL, IT SHOULD BE FABRICATED PER D1.5 AND HAVE THE SUPPORTING PQR INCLUDED WITH THE SUBMITTAL. PLEASE REVISE.

Vermont Agency of Transportation

RECEIVED

ON: May 9, 2016

and Checked for

CONFORMANCE

BY: Jennifer Fitch DATE: 05/18/2016

WELDING PROCEDURE

Pass no.	Electrode size	Welding Current Amperes	Welding Current Volts	Travel speed	Joint detail
1	.035	110	21	6IPM	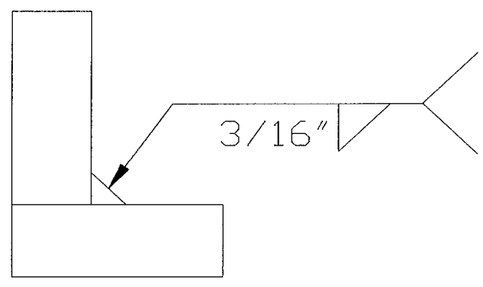
Variable	LIMITS	121 TO 99	23 TO 19	7 TO 5	

This procedure may vary due to fabrication sequence, fit-up, pass size, etc., within the limitation of variables given in Section 5.

Procedure No. 3013

Revision No.

Contractor Elderlee, Inc.

Authorized By RANDY SCOTT

Date 6/21/2012

Form III-2

SHOP DRAWING REVIEW

☐ REVIEWED AS REQUIRED BY THE CONSTRUCTION CONTRACT DOCUMENTS AND APPROVED, BUT ONLY FOR CONFORMANCE TO THE DESIGN CONCEPT OF THE WORK, AND SUBJECT TO FURTHER LIMITATIONS AND REQUIREMENTS CONTAINED IN THE CONSTRUCTION CONTRACT DOCUMENTS.

☐ REJECTED ☒ REVISE AND RESUBMIT ☐ APPROVED AS NOTED

CORRECTIONS OR COMMENTS MADE ON THE SHOP DRAWINGS DURING THIS REVIEW DID NOT RELIEVE CONTRACTOR FROM COMPLIANCEWITH REQUIREMENTS OF THE DRAWINGS AND SPECIFICATIONS. THIS CHECK IS ONLY FOR REVIEW OF GENERAL CONFORMANCE WITH THE DESIGN CONCEPT OF THE PROJECT AND GENERAL COMPLIANCE WITH THE INFORMATION GIVEN IN THE CONTRACT DOCUMENTS. THE CONTRACTOR IS RESPOINSIBLE FOR: CONFIRMING AND CORRELATING ALL QUANTITIES AND DIMENSIONS: SELECTING FABRICATION PROCESSES AND TECHNIQUES OF CONSTRUCTION: COORDINATING THEIR WORK WITH THAT OF ALL OTHER TRADES: AND PERFORMING THEIR WORK IN A SAFE AND SATISFACTORY MANNER.

CLD Consulting Engineers
540 Commercial Street
Manchester, NH 03101
603-668-8223

Job Number: 150223
Reviewed by: SRB
Date: 05/18/2016

WELDING PROCEDURE SPECIFICATION

Material Specification	ASTM-A500-A53-GRADE B TO A36
Welding Process	FCAW
Manual or Machine	SEMAUTOMATIC
Position of Welding	5G
Filler Metal Specification	A5.20
Filler Metal Classification	E71T-1/T-1M ESAB DUAL SHIELD 7000
Flux	N/A
Shielding Gas	CO 2 Dew Point -40DEG F FLOW RATE 50 CFH
Single or Multiple Pass	SINGLE
Single or Multiple Arc	SINGLE
Welding Current	DC
Polarity	REVERSE ELECTRODE POSITIVE
Welding Progression	~~STRINGER~~
Root Treatment	PER D1.1
Preheat and Interpass Temperature	PER D1.1
Postheat Temperature	NONE
Heat Input	Min _____ Max _____

ALTHOUGH THIS IS HANDRAIL, AS IT IS PART OF THE BRIDGE RAIL, IT SHOULD BE FABRICATED PER D1.5 AND HAVE THE SUPPORTING PQR INCLUDED WITH THE SUBMITTAL. PLEASE REVISE.

WELDING PROCEDURE

Pass no.	Electrode size	Welding Current Amperes	Welding Current Volts	Travel speed	Joint detail
1	.035	110	21	6IPM	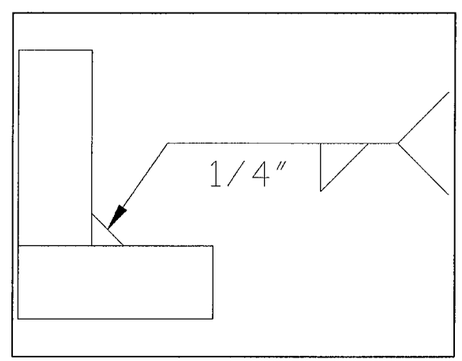
Variable	LIMITS	121 TO 99	23 TO 19	7 TO 5	

This procedure may vary due to fabrication sequence, fit-up, pass size, etc., within the limitation of variables given in Section 5.

Procedure No. 3015
Revision No. _____

Contractor Elderlee, Inc.
Authorized By RANDY SCOTT
Date 12/5/2012

Form III-2

Form III-2-Sample Welding Procedure Specification

SHOP DRAWING REVIEW

☐ REVIEWED AS REQUIRED BY THE CONSTRUCTION CONTRACT DOCUMENTS AND APPROVED, BUT ONLY FOR CONFORMANCE TO THE DESIGN CONCEPT OF THE WORK, AND SUBJECT TO FURTHER LIMITATIONS AND REQUIREMENTS CONTAINED IN THE CONSTRUCTION CONTRACT DOCUMENTS.

☐ REJECTED ☒ REVISE AND RESUBMIT ☐ APPROVED AS NOTED

CORRECTIONS OR COMMENTS MADE ON THE SHOP DRAWINGS DURING THIS REVIEW DID NOT RELIEVE CONTRACTOR FROM COMPLIANCEWITH REQUIREMENTS OF THE DRAWINGS AND SPECIFICATIONS. THIS CHECK IS ONLY FOR REVIEW OF GENERAL CONFORMANCE WITH THE DESIGN CONCEPT OF THE PROJECT AND GENERAL COMPLIANCE WITH THE INFORMATION GIVEN IN THE CONTRACT DOCUMENTS. THE CONTRACTOR IS RESPOINSIBLE FOR: CONFIRMING AND CORRELATING ALL QUANTITIES AND DIMENSIONS: SELECTING FABRICATION PROCESSES AND TECHNIQUES OF CONSTRUCTION: COORDINATING THEIR WORK WITH THAT OF ALL OTHER TRADES: AND PERFORMING THEIR WORK IN A SAFE AND SATISFACTORY MANNER.

CLD Consulting Engineers
540 Commercial Street
Manchester, NH 03101
603-668-8223

Job Number: 150223
Reviewed by: SRB
Date: 05/18/2016

Vermont Agency of Transportation
RECEIVED
ON: May 9, 2016
and Checked for
CONFORMANCE
BY: Jennifer Fitch DATE: 05/18/2016