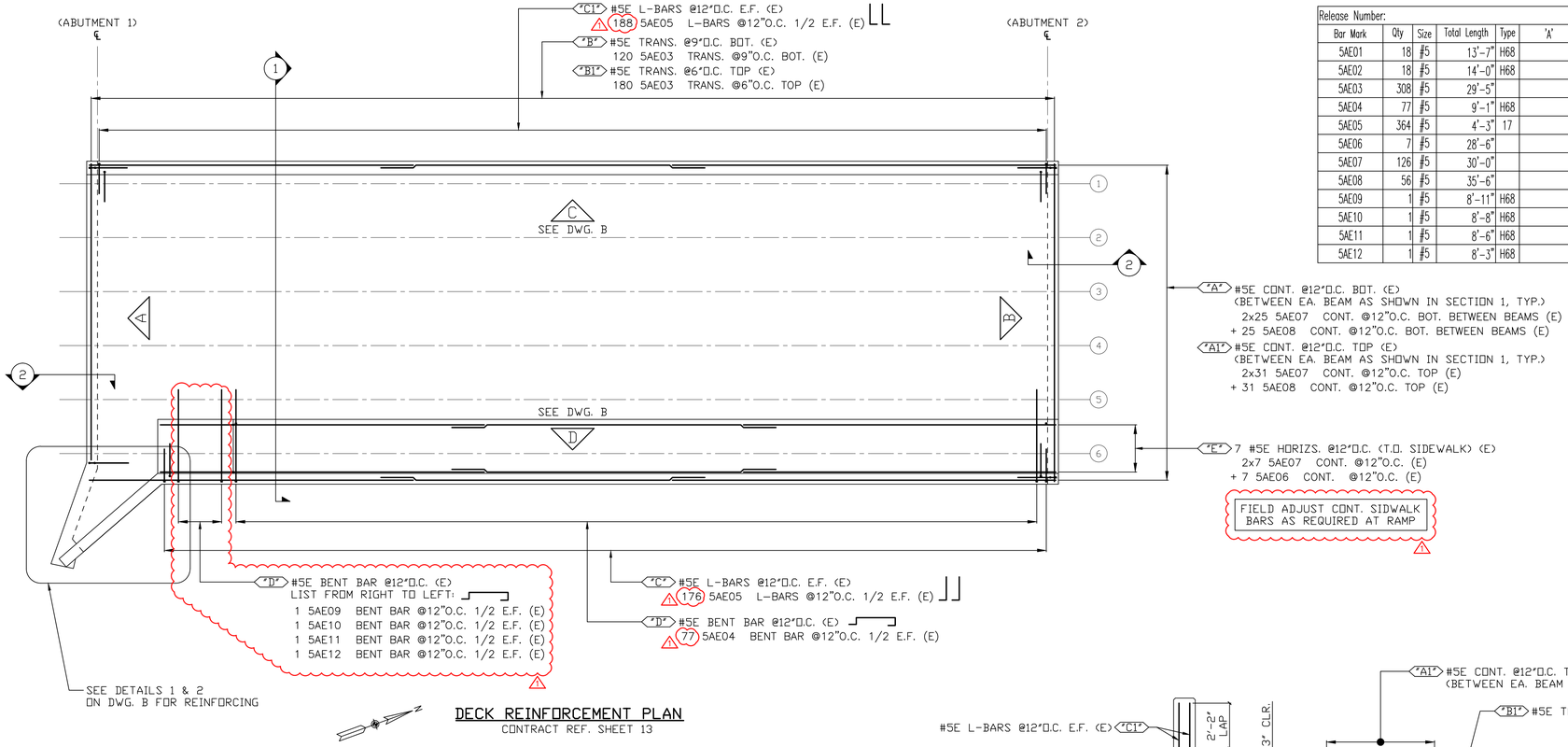

DECK REINFORCEMENT PLAN

CONTRACT REF. SHEET 13

Release Number:							BAR LIST											
Bar Mark	Qty	Size	Total Length	Type	'A'	'B'	'C'	'D'	'E'	'F'	'G'	'H'	'J'	'K'	'O'	'R'
5AE01	18	#5	13'-7"	H68		3'-0"	3'-4 ½"	0'-7"	3'-7 ½"	3'-0"						
5AE02	18	#5	14'-0"	H68		3'-0"	3'-7"	0'-7"	3'-10"	3'-0"						
5AE03	308	#5	29'-5"			29'-5"										
5AE04	77	#5	9'-1"	H68		0'-10"	0'-11"	5'-5"	1'-1"	0'-10"						
5AE05	364	#5	4'-3"	17		1'-0"	3'-3"									
5AE06	7	#5	28'-6"			28'-6"										
5AE07	126	#5	30'-0"			30'-0"										
5AE08	56	#5	35'-6"			35'-6"										
5AE09	1	#5	8'-11"	H68		0'-10"	0'-10"	5'-5"	1'-0"	0'-10"						
5AE10	1	#5	8'-8"	H68		0'-10"	0'-8 ½"	5'-5"	0'-10 ½"	0'-10"						
5AE11	1	#5	8'-6"	H68		0'-10"	0'-7 ½"	5'-5"	0'-9 ½"	0'-10"						
5AE12	1	#5	8'-3"	H68		0'-10"	0'-6"	5'-5"	0'-8"	0'-10"						

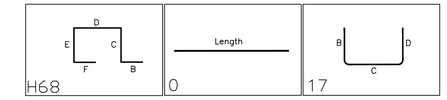

ALL REINF. EPOXY

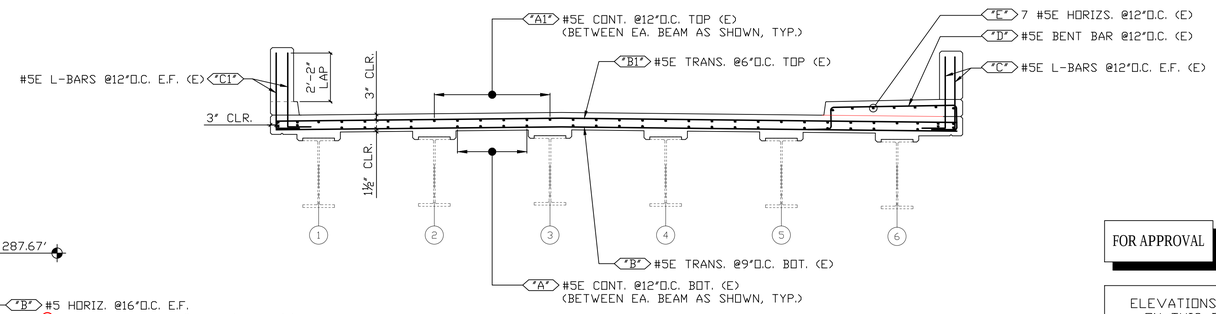

SECTION 1

CONTRACT REF. SHEET 13

LEGEND:
CONT.-CONTINUOUS
TRANS.-TRANSVERSE
LONG.-LONGITUDINAL
LAT.-LATITUDINAL
DWLS.-DOWELS
VERTS.-VERTICAL
HORIZ.-HORIZONTAL
T&B -TOP & BOTTOM
I.F.-INNER FACE
O.F.-OUTER FACE
E.E.-EACH END
E.F.-EACH FACE
F.F.-FRONT FACE
R.F.-REAR FACE
E.W.-EACH WAY
O.C.-ON CENTER
L.W.-LONG WAY
S.W.-SHORT WAY

FOR APPROVAL

ELEVATIONS & DIMENSIONS SHOWN ON THIS DWG. ARE FOR REINF. DETAILING PURPOSES ONLY AND ARE NOT INTENDED FOR DIMENSIONAL CONSTRUCTION.

EPOXY REINF. BARS ASTM A615 GRADE 60, MARKED (E)

VERIFICATION OF UNCLEAR INFORMATION MAY BE REQUESTED ON THIS DRAWING. SHOULD VERIFICATION BE LEFT UN-ADDRESSED IT WILL REMAIN AS SHOWN AND ASSUME TO BE CORRECT.

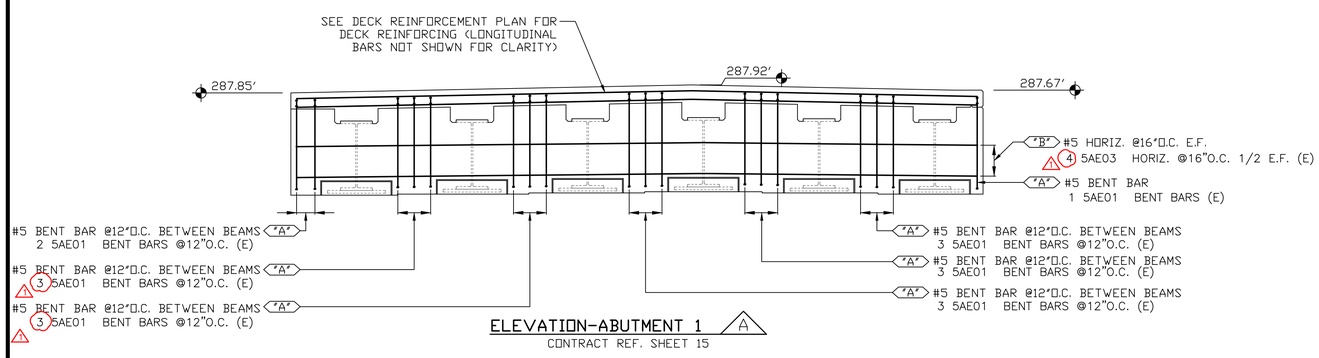

ELEVATION-ABUTMENT 1 (A)

CONTRACT REF. SHEET 15

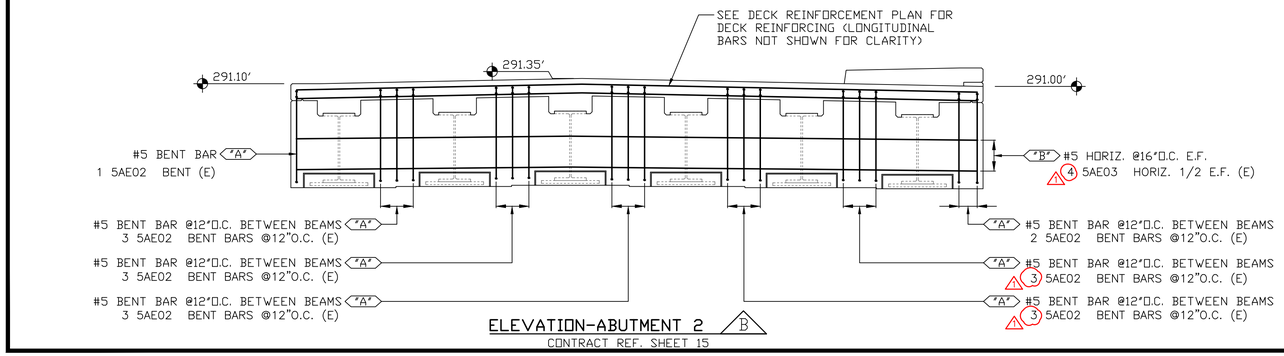

ELEVATION-ABUTMENT 2 (B)

CONTRACT REF. SHEET 15

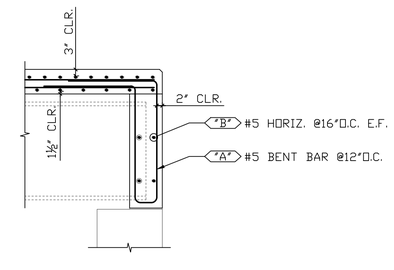

SECTION 2

CONTRACT REF. SHEET 16

6			
5			
4			
3			
2	6/21/16	1	REVISED AS NOTED/FOR APPROVAL
1	6/13/16	–	FOR APPROVAL
	DATE	REV.#	SENT FOR

DIMENSION
DIMENSION FABRICATORS INC.
2000 7TH STREET
SCOTIA, N.Y. 12302
PH: (518) 374-1936
FAX (518) 374-4830
www.dimensionfabricators.com

STRUCTURE	VTAOT BRATTLEBORO BF2000(26)
LOCATION	ELLITO ST. OVER WHETSTONE BROOK BRATTLEBORO, VT
ARCHITECT	N/A
ENGINEER	CLD CONSULTING ENGINEERS
CUSTOMER	RENAUD BROS., INC.
DRAWN BY: STEPHEN B.	DATE: 5/13/16 — DFI #: 9744
DRAWING COVERS: DECK & SIDEWALK REINF.	DRAWING #: A

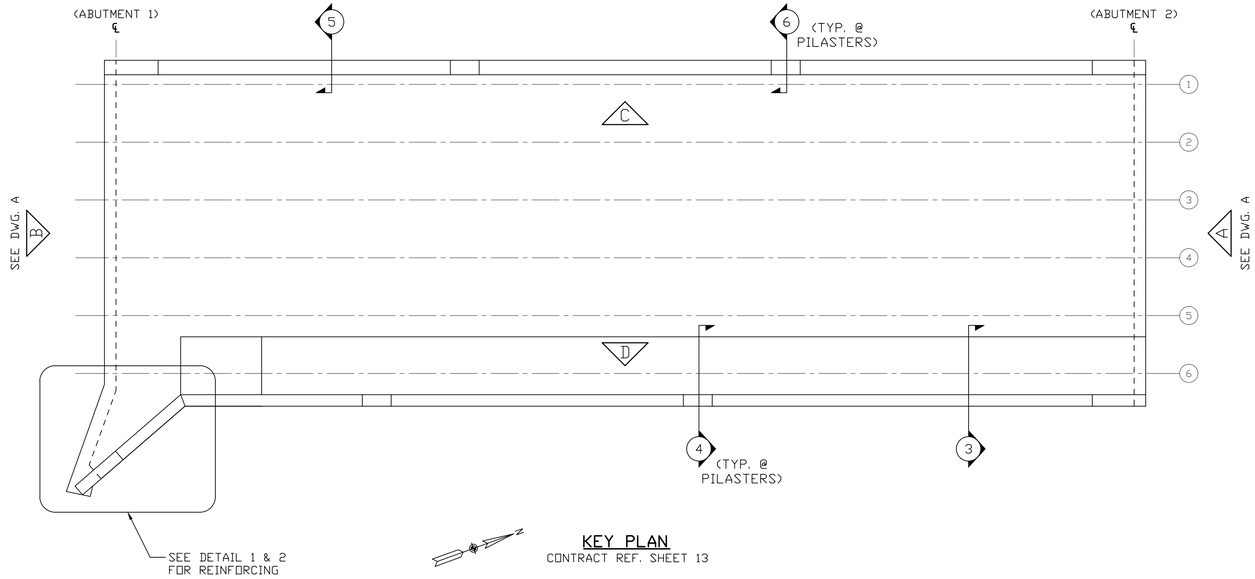

KEY PLAN
CONTRACT REF. SHEET 13

CONTRACTOR IS TO CONFIRM ELEVATIONS DURING DEMOLITION

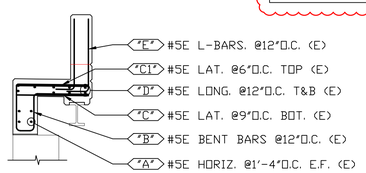

SECTION 1
CONTRACT REF. SHEET 13

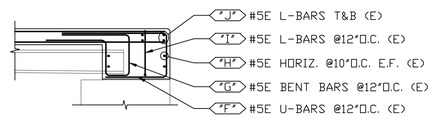

SECTION 2
CONTRACT REF. SHEET 13

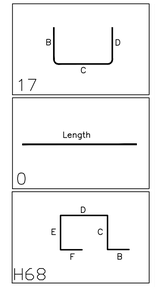

Release Number:

BAR LIST

Bar Mark	Qty	Size	Total Length	Type	'A'	'B'	'C'	'D'	'E'	'F'	'G'	'H'	'J'	'K'	'O'	'R'
5AE01	28	#5	4'-3"	17		1'-0"	3'-3"									
5AE02	2	#5	18'-0"			18'-0"										
5AE03	2	#5	17'-7"			17'-7"										
5AE04	2	#5	2'-9"	17		1'-0"	1'-9"									
5AE05	2	#5	14'-11"			14'-11"										
5AE06	2	#5	12'-3"			12'-3"										
5AE07	2	#5	9'-6"			9'-6"										
5AE08	2	#5	6'-10"			6'-10"										
5AE09	2	#5	4'-1"			4'-1"										
5AE10a	1	#5	1'-7"			1'-7"										
5AE10b	1	#5	2'-2"			2'-2"										
5AE10c	1	#5	2'-10"			2'-10"										
5AE10d	1	#5	3'-5"			3'-5"										
5AE10e	1	#5	4'-1"			4'-1"										
5AE10f	1	#5	4'-8"			4'-8"										
5AE10g	1	#5	5'-4"			5'-4"										
5AE10h	1	#5	5'-11"			5'-11"										
5AE10i	1	#5	6'-7"			6'-7"										
5AE10j	1	#5	7'-2"			7'-2"										
5AE10k	1	#5	7'-10"			7'-10"										
5AE11a	1	#5	1'-7"			1'-7"										
5AE11b	1	#5	1'-11"			1'-11"										
5AE11c	1	#5	2'-4"			2'-4"										
5AE11d	1	#5	2'-9"			2'-9"										
5AE11e	1	#5	3'-1"			3'-1"										
5AE11f	1	#5	3'-6"			3'-6"										
5AE11g	1	#5	3'-11"			3'-11"										
5AE11h	1	#5	4'-3"			4'-3"										
5AE11i	1	#5	4'-8"			4'-8"										
5AE11j	1	#5	5'-1"			5'-1"										
5AE11k	1	#5	5'-5"			5'-5"										
5AE11l	1	#5	5'-10"			5'-10"										
5AE11m	1	#5	6'-3"			6'-3"										
5AE11n	1	#5	6'-7"			6'-7"										
5AE11o	1	#5	7'-0"			7'-0"										
5AE11p	1	#5	7'-5"			7'-5"										
5AE11q	1	#5	7'-10"			7'-10"										
5AE12	1	#5	5'-4"	17		1'-7"	2'-2"	1'-7"								
5AE13	2	#5	7'-4"	17		2'-7"	1'-9"	3'-0"								
5AE14	2	#5	10'-4"	H68		3'-0"	1'-7"	1'-0"	1'-9"	3'-0"						
5AE15	9	#5	9'-2"	H68		3'-0"	1'-0"	1 0'-7"	1'-7"	3'-0"						
5AE16	6	#5	13'-6"			13'-6"										

FOR APPROVAL

ALL REINF. EPOXY

ELEVATIONS & DIMENSIONS SHOWN ON THIS DWG. ARE FOR REINF. DETAILING PURPOSES ONLY AND ARE NOT INTENDED FOR DIMENSIONAL CONSTRUCTION.

EPOXY REINF. BARS ASTM A615 GRADE 60, MARKED (E)

VERIFICATION OF UNCLEAR INFORMATION MAY BE REQUESTED ON THIS DRAWING. SHOULD VERIFICATION BE LEFT UN-ADDRESSED IT WILL REMAIN AS SHOWN AND ASSUME TO BE CORRECT.

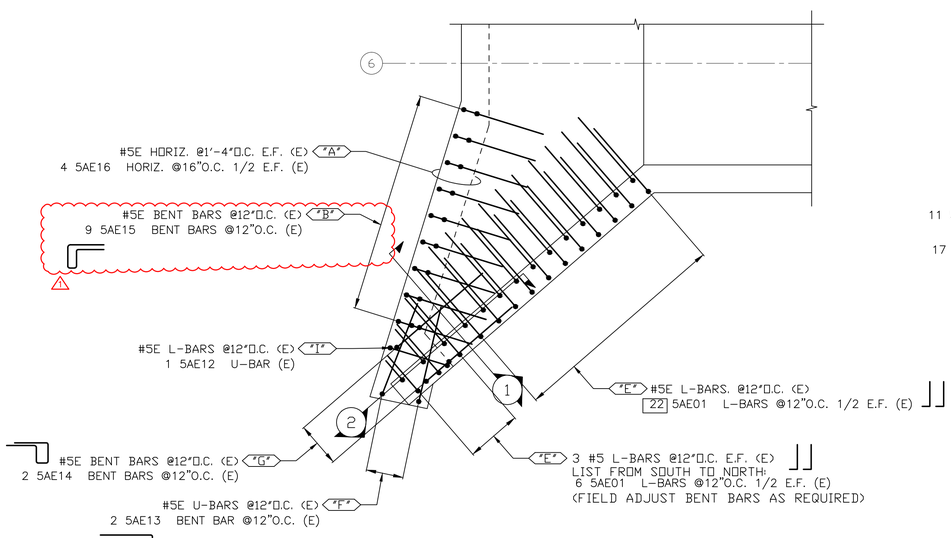

DETAIL 1 - BACKWALL AND BARRIER REINF.
CONTRACT REF. SHEET 13

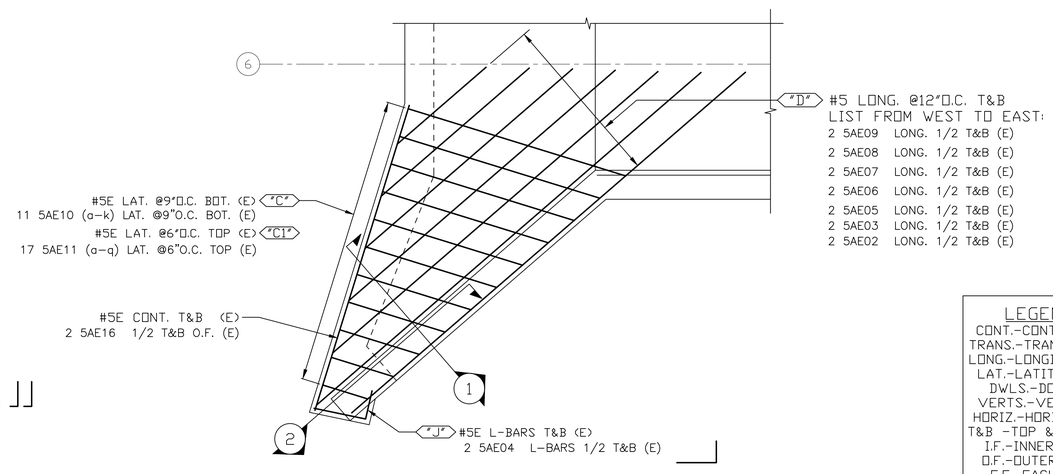

DETAIL 2 - CONT. & TRANS. REINF.
CONTRACT REF. SHEET 14

LEGEND:
CONT.-CONTINUOUS
TRANS.-TRANSVERSE
LONG.-LONGITUDINAL
LAT.-LATITUDINAL
DWLS.-DOWELS
VERTS.-VERTICAL
HORIZ.-HORIZONTAL
T&B -TOP & BOTTOM
I.F.-INNER FACE
O.F.-OUTER FACE
E.E.-EACH END
E.F.-EACH FACE
F.F.-FRONT FACE
R.F.-REAR FACE
E.W.-EACH WAY
O.C.-ON CENTER
L.W.-LONG WAY
S.W.-SHORT WAY

6			
5			
4			
3			
2	6/21/16	1	REVISED AS NOTED/FOR APPROVAL
1	6/13/16	–	FOR APPROVAL
	DATE	REV.#	SENT FOR

DIMENSION
DIMENSION FABRICATORS INC.
2000 7TH STREET
SCOTIA, N.Y. 12302
PH: (518) 374-1936
FAX (518) 374-4830
www.dimensionfabricators.com

STRUCTURE	VTAOT BRATTLEBORO VF 2000(26)
LOCATION	ELLIOT ST. OVER WHETSTONE BROOK BRATTLEBORO, VT
ARCHITECT	N/A
ENGINEER	CLD CONSULTING ENGINEERS
CUSTOMER	RENAUD BROS., INC.

DRAWN BY	DATE	DFI #
STEPHEN B	5/13/16	9744

DRAWING COVERS	DRAWING #
DECK REINFORCING DETAIL	B

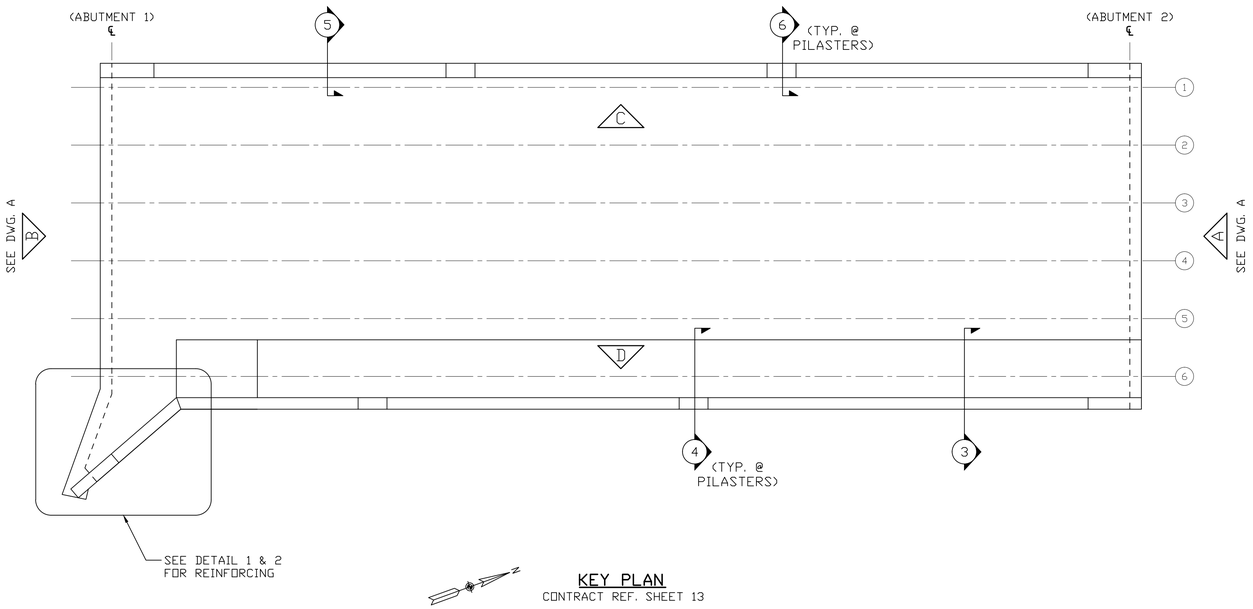

KEY PLAN
CONTRACT REF. SHEET 13

Release Number:						BAR LIST										
Bar Mark	Qty	Size	Total Length	Type	'A'	'B'	'C'	'D'	'E'	'F'	'G'	'H'	'J'	'K'	'O'	'R'
5CE01	6	#5	6'-0"	3		3'-0"	3'-0"					1'-11 ½"		2'-3 ¼"	5'-3 ¼"	
5CE02	6	#5	6'-9"			6'-9"										
5CE03	6	#5	23'-10"			23'-10"										
5CE04	40	#5	2'-0"			2'-0"										
5CE05	30	#5	24'-9"			24'-9"										
5CE06	40	#5	4'-2"			4'-2"										
5CE07	164	#5	4'-8"	17		2'-1"	0'-6"	2'-1"								
5CE08	32	#5	8'-10"	17		4'-2"	0'-6"	4'-2"								
5CE09	8	#5	5'-0"	T2	0'-6"	1'-0"	1'-0"	1'-0"	1'-0"		0'-6"					
5CE10	2	#5	5'-0"			5'-0"										

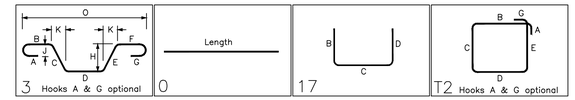

ALL REINF. EPOXY

TEST BARS:
2 5CE10 #5 EPOXY COATED TEST BARS 1

LEGEND:
CONT.-CONTINUOUS
TRANS.-TRANSVERSE
LONG.-LONGITUDINAL
LAT.-LATITUDINAL
DWLS.-DOWELS
VERTS.-VERTICAL
HORIZ.-HORIZONTAL
T&B -TOP & BOTTOM
I.F.-INNER FACE
O.F.-OUTER FACE
E.E.-EACH END
E.F.-EACH FACE
F.F.-FRONT FACE
R.F.-REAR FACE
E.W.-EACH WAY
O.C.-ON CENTER
L.W.-LONG WAY
S.W.-SHORT WAY

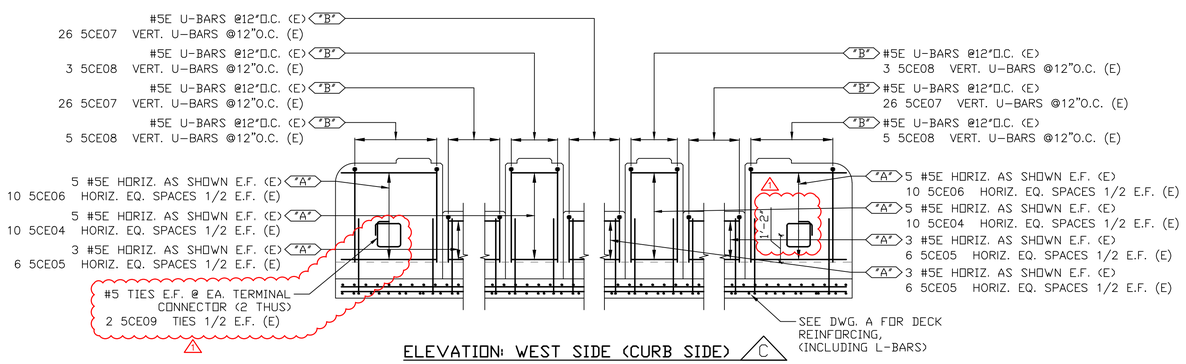

ELEVATION: WEST SIDE (CURB SIDE) C

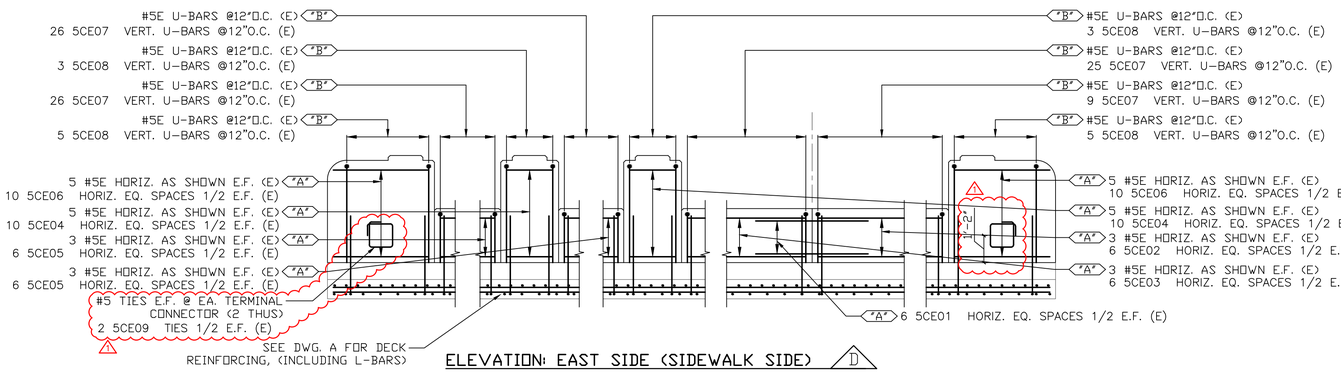

ELEVATION: EAST SIDE (SIDEWALK SIDE) D

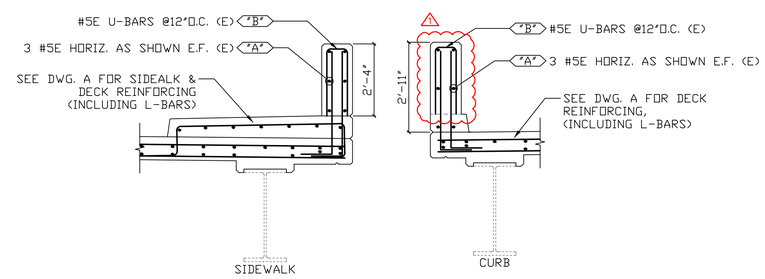

TYPICAL CONCRETE BASE PARAPET SECTIONS
CONTRACT REF. SHEET 21

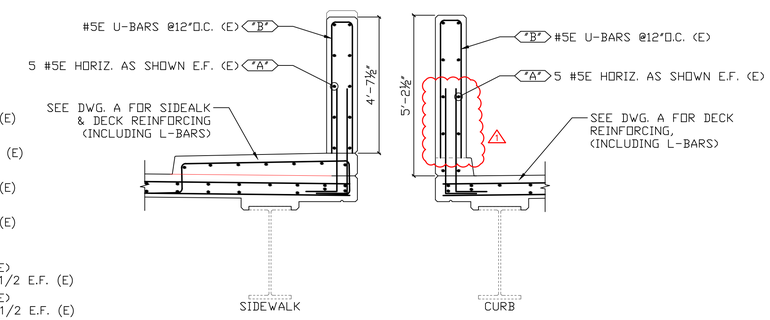

TYPICAL INTERMEDIATE PILASTER SECTIONS
CONTRACT REF. SHEET 21

FOR APPROVAL

ELEVATIONS & DIMENSIONS SHOWN ON THIS DWG. ARE FOR REINF. DETAILING PURPOSES ONLY AND ARE NOT INTENDED FOR DIMENSIONAL CONSTRUCTION.

EPOXY REINF. BARS ASTM A615 GRADE 60, MARKED (E)

VERIFICATION OF UNCLEAR INFORMATION MAY BE REQUESTED ON THIS DRAWING. SHOULD VERIFICATION BE LEFT UN-ADDRESSED IT WILL REMAIN AS SHOWN AND ASSUME TO BE CORRECT.

6			
5			
4			
3			
2	6/21/16	1	REVISED AS NOTED/FOR APPROVAL
1	6/13/16	–	FOR APPROVAL
	DATE	REV.#	SENT FOR

DIMENSION
DIMENSION FABRICATORS INC.
2000 7TH STREET
SCOTIA, N.Y. 12302
PH: (518) 374-1936
FAX (518) 374-4830
www.dimensionfabricators.com

STRUCTURE	VTAOT BRATTLEBORO VF 2000(26)
LOCATION	ELLIOT ST. OVER WHETSTONE BROOK BRATTLEBORO, VT
ARCHITECT	N/A
ENGINEER	CLD CONSULTING ENGINEERS
CUSTOMER	RENAUD BROS., INC.

DRAWN BY	DATE	DFI #
STEPHEN B	5/13/16	9744

DRAWING COVERS	DRAWING #
DECK REINFORCING DETAIL	C