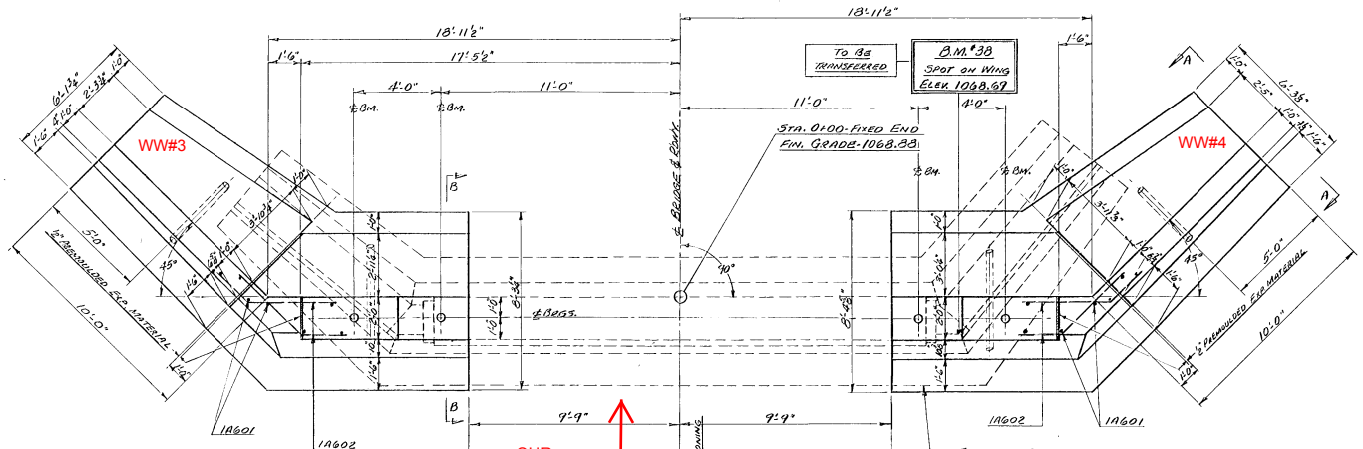

ELEVATION

NOTE

WHEN THE EXCAVATION BEGINS FOR NEW PORTIONS OF THE ABUTMENT, WOOD SHEET PILES TO BE DRIVEN ALONG THE FACES OF THE CUT LINES AND LEFT IN PLACE TO PREVENT UNDER-CUTTING OF EXISTING ABUTMENT. WOOD SHEET PILES TO BE CUT OFF AT AN ELEVATION BELOW PERMANENT WATER LEVEL. LENGTH OF THE WOOD SHEET PILES TO BE DETERMINED BY THE ENGINEER. WORK AND MATERIALS TO BE INCLUDED IN UNIT BID PRICE FOR STRUCTURE EXCAVATION, ITEM 107.

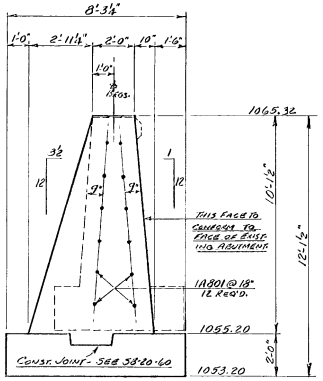

SECTION B-B

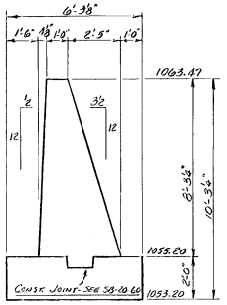

VIEW A-A

— LIST OF SHEETS —

1	DETAILS OF ABUTMENT NO. 1
2	DETAILS OF ABUTMENT NO. 2
3	SUPERSTRUCTURE DETAILS
4	REINFORCING STEEL DETAILS
5	CHANNEL SECTIONS
6	STD. DWG. 38-SG-60 (SH. 2)
7	" " 318-30 (11-20)
8	" " SCB-D-60
9	" " 38-20-60
10	" " E-2

— SUMMARY OF QUANTITIES —

ITEM No.	ITEM	UNIT	NET	OVERRUN	TOTAL	FINAL
106-A	CHAN. EXCAV. OF EARTH	C.Y.				
106-B	CHAN. EXCAV. OF ROCK	C.Y.				
106-C	UNCLASS. CHAN. EXCAV.	C.Y.				
107	STRUCT. EXCAV.	C.Y.	100	10	110	
401-B	CONC. CLASS B (MOD.)	C.Y.	71	4	75	
402	REINF. STEEL (See Reinf. Steel Dets.)	LBS.				
407	ASPHALTIC-ASB. COATING	S.Y.				
502-B	TREATED TIMBER PILING	L.F.				
503	SPLICES FOR STEEL PILING	EA.				
504	STEEL PILING	L.F.				
502-A	UNTREATED TIMBER PILING	L.F.				
101-B	SOLID ROCK EXCAVATION	C.Y.	5	-	5	

ITEM No.	ITEM	UNIT	NET	OVRUN	TOTAL	FINAL
101-B	SOLID ROCK EXCAVATION	C.Y.	20	-	20	
107	STRUCTURE EXCAVATION	C.Y.	230	23	253	
318	TAR EMULSION FOR BRIDGE FLOORS	GAL.	62	-	62	
361-B	BITUMINOUS CONC. PAVEMENT (MOD)	TON	20	3	23	
372	JOINT SEALER, HOT POURED ELASTIC TYPE	L.F.	92	-	92	
401-B	CONCRETE CLASS B (MOD)	C.Y.	174	9	183	
402	REINFORCING STEEL	LB.	5980	-	5980	
404-A	STRUCTURAL STEEL	LB.	22,786	496	23,282	
536-C	GRANITE BRIDGE CURB (MOD)	L.F.	92	-	92	
572	BRIDGE RAILING (2 RAIL GALVANIZED)	L.F.	92	-	92	
574	PIER SUPERSTRUCTURE FOR WIDENING	L.S.	1	-	1	

STATE OF VERMONT
DEPARTMENT OF HIGHWAYS

TOWN OF ANDOVER
ROUTE NO. VT. 11 LOG STA. 140+79
DETAILS OF ~~ABUTMENT NO. 1~~ ABUTMENT #2
SCALE 3/8" = 1'-0"
SURVEYED BY BURLEY
DRAWN BY RKJ 3/28 CHECKED BY RLM 3-26-38
PROJECT NO. MA 253(25)03M/1960
SHEET 1 OF 10

PROJECT NUMBER MA-253(25)03M/1960 LENGTH ML
TYPE Bridge widening YEAR 19
CONTRACTOR
LOCATION Rt #11 - Log Sta. 140+79

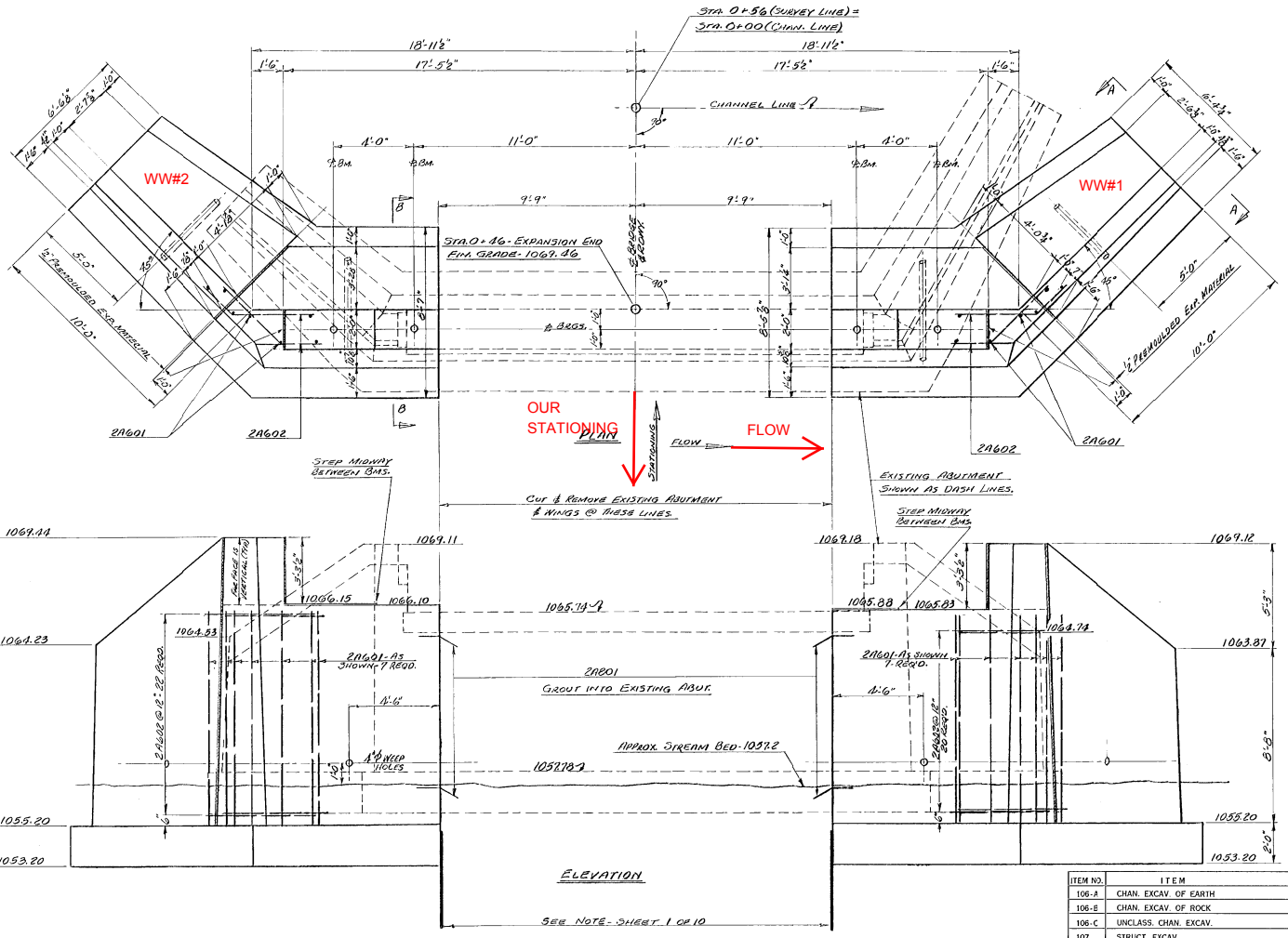

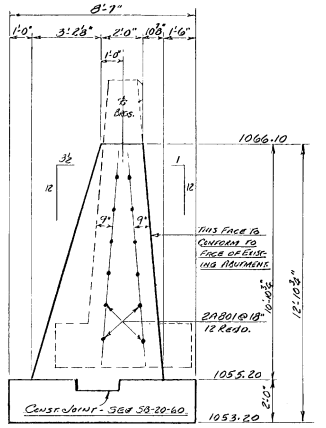

SECTION B-B

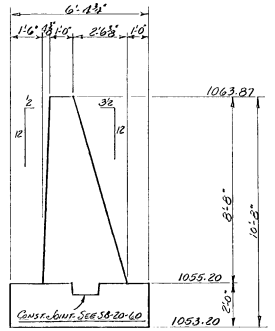

VIEW A-A

ITEM NO.	ITEM	UNIT	NET	OVERRUN	TOTAL	FINAL
106-A	CHAN. EXCAV. OF EARTH	C. Y.				
106-B	CHAN. EXCAV. OF ROCK	C. Y.				
106-C	UNCLASS. CHAN. EXCAV.	C. Y.				
107	STRUCT. EXCAV.	C. Y.	130	13	143	
401-B	CONC. CLASS B (MOD.)	C. Y.	76	4	80	
402	REINF. STEEL (SEE REINF. STEEL DETS.)	LBS.				
407	ASPHALTIC-ASB. COATING	S. Y.				
502-B	TREATED TIMBER PILING	L. F.				
503	SPLICES FOR STEEL PILING	EA.				
504	STEEL PILING	L. F.				
502-A	UNTREATED TIMBER PILING	L. F.				
101-B	SOLID ROCK EXCAVATION	C.Y.	15	-	15	

STATE OF VERMONT
DEPARTMENT OF HIGHWAYS

TOWN OF ANDOVER
ROUTE NO. VT. 11 LOG STA. 140+79
DETAILS OF ~~ABUTMENT NO. 2~~ ABUTMENT #1
SCALE 3/8" = 1'-0"
SURVEYED BY BURLEY
DRAWN BY R.F.B. 2/62 CHECKED BY RLM 3-20-62
PROJECT NO. MA 259/25.03M/1960
SHEET 2 OF 10

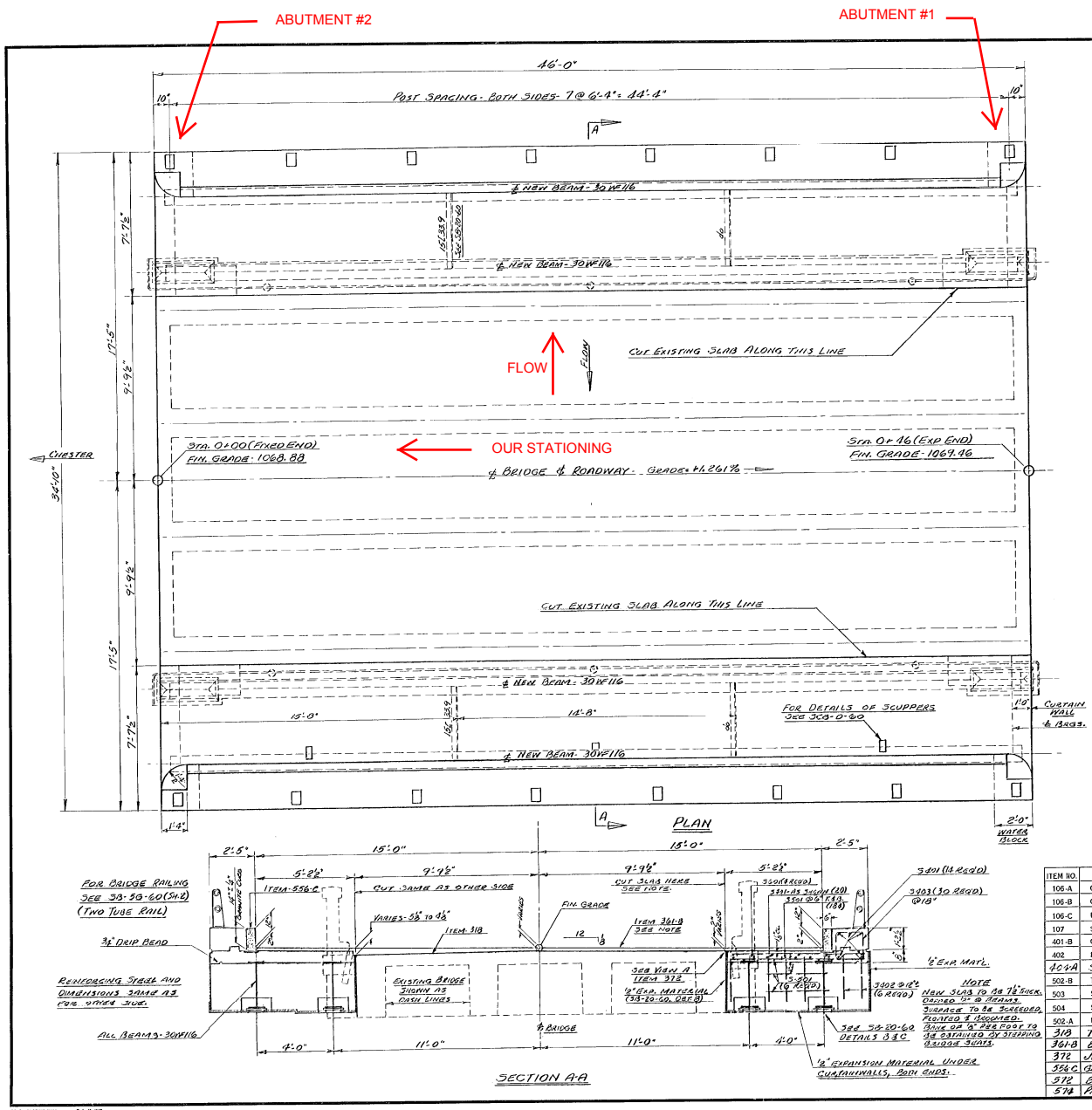

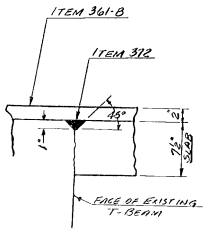

VIEW A
SCALE - 1½" = 1'-0"

~NOTES~

FOR DETAILS NOT SHOWN, REFER TO THE FOLLOWING STANDARD DRAWINGS:
SB-5G-60 (SHEET 2)
SIB-30 (H-20)
SCB-D-60
SB-20-60
E-2
REMOVE PRESENT BITUMINOUS WEARING SURFACE FROM EXISTING STRUCTURE. COST OF SUCH WORK TO BE INCLUDED IN UNIT PRICE BID FOR ITEM 574.
RETAIN TRANSVERSE REINFORCING STEEL IN SLAB WHEN REMOVING PRESENT CURB AND RAIL, AND SPLICE TO S501 BARS.
BEAMS TO BE UNCAMBERED.

ITEM NO.	ITEM	UNIT	NET	OVERRUN	TOTAL	FINAL
106-A	CHAN. EXCAV. OF EARTH	C. Y.				
106-B	CHAN. EXCAV. OF ROCK	C. Y.				
106-C	UNCLASS. CHAN. EXCAV.	C. Y.				
107	STRUCT. EXCAV.	C. Y.				
401-B	CONC. CLASS B (MOD.)	C. Y.	27	1	28	
402	REINF. STEEL (SEE REINF. STEEL DETS.)	LBS.				
404-A	STRUCTURAL STEEL	LB.	22,786	456	23,242	
502-B	TREATED TIMBER PILING	L. F.				
503	SPLICES FOR STEEL PILING	EA.				
504	STEEL PILING	L. F.				
502-A	UNTREATED TIMBER PILING	L. F.				
318	TAR EMULSION FOR BRIDGE FLOORS	GAL.	62	—	62	
361-B	BITUMINOUS CONCRETE PAVT. (MOD.)	TON	20	3	23	
372	JOINT SEALER, HOT-POURED ELASTIC TYPE	L.F.	92	-	92	
556-C	GRANITE BRIDGE CURB (MOD.)	L.F.	92	-	92	
572	BRIDGE RAILING (2 TUBE-GALVANIZED)	L.F.	92	-	92	
574	PREP. SUPERSTRUCTURE FOR MODENING	L.S.	1	-	1	

STATE OF VERMONT
DEPARTMENT OF HIGHWAYS

TOWN OF ANDOVER
ROUTE NO. VT. 11 LOG STA. 140+79
SUPERSTRUCTURE DETAILS

SCALE ⅜" = 1'-0"
SURVEYED BY BURLEY
DRAWN BY RTB 2/63 CHECKED BY RLM 3-20-63
PROJECT NO. MA259/25.033/1960
SHEET 3 OF 10

Item	No Pieces	Size	Length	Mark	Type	A	B	C	D	E	F	G	H	J	K	R	O
1																	
2																	
3																	
4																	
5																	
6																	
7																	
8																	
9																	
10																	
11																	
12																	
13																	
14																	
15																	
16																	
17																	
18																	
19																	
20																	
21																	
22																	
23																	
24																	
25																	
26																	
27																	
28																	
29																	
30																	
31																	
32																	
33																	
34																	
35																	
36																	
37																	
38																	
39																	
40																	
41																	
42																	
43																	
44																	
45																	
46																	
47																	
48																	
49																	
50																	
51																	
52																	
53																	
54																	
55																	
56																	
57																	
58																	
59																	
60																	
61																	
62																	
63																	
64																	
65																	
66																	
67																	
68																	
69																	
70																	
71																	
72																	
73																	
74																	
75																	
76																	
77																	
78																	
79																	
80																	
81																	

Item	No Pieces	Size	Length	Mark	Type	A	B	C	D	E	F	G	H	J	K	R	O
82																	
83																	
84																	
85																	
86																	
87																	
88																	
89																	
90																	
91																	
92																	
93																	
94																	
95																	
96																	
97																	
98																	
99																	
100																	
101																	
102																	
103																	
104																	
105																	
106																	
107																	
108																	
109																	
110																	
111																	
112																	
113																	
114																	
115																	
116																	
117																	
118																	
119																	
120																	
121																	
122																	
123																	
124																	
125																	
126																	
127																	
128																	
129																	
130																	
131																	
132																	
133																	
134																	
135																	
136																	
137																	
138																	
139																	
140																	
141																	
142																	
143																	
144																	
145																	
146																	
147																	
148																	
149																	
150																	
151																	
152																	
153																	
154																	
155																	
156																	
157																	
158																	
159																	
160																	
161																	
162																	

TYPICAL BAR BENDS

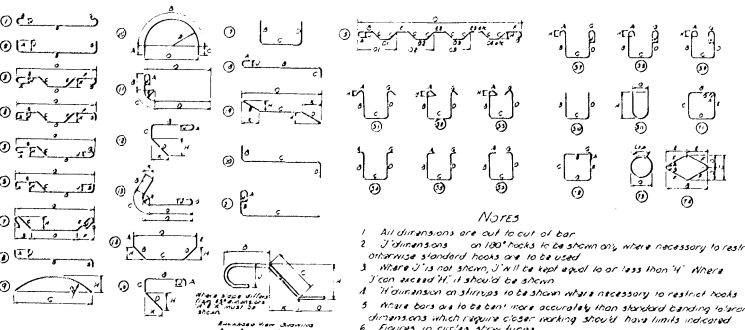

NOTES

1. All dimensions are out to out of bar
2. J' dimensions on 180° hooks to be shown only where necessary to restrict hook size otherwise standard hooks are to be used
3. Where J' is not shown, J' will be kept equal to or less than 'H'. Where J' can exceed 'H', it should be shown
4. 'H' dimension on stirrups to be shown where necessary to restrict hooks
5. Where bars are to be bent more accurately than standard bending tolerances bending dimensions which require closer working should have limits indicated
6. Figures in circles show types
7. No allowance for bend curvature is to be made except for standard hook & fold in excess of same.

Item	No Pieces	Size	Length	Mark	Type	A	B	C	D	E	F	G	H	J	K	R	O
163						- ABUTMENT NO. 1 -											
164	14	6	9-10	1A601	STR.												
165	40	6	6-0	1A602	19		2-0	4-0	NONE				1-5		1-5		
166	24	8	2-0	1A801	19		1-0	1-0	NONE				0-6		0-10 3/8		
167																	
168						- ABUTMENT NO 2 -											
169	14	6	10-4	2A601	STR.												
170	42	6	6-0	2A602	19		2-0	4-0	NONE				1-5		1-5		
171	24	8	2-0	2A801	19		1-0	1-0	NONE				0-6		0-10 3/8		
172																	
173																	
174																	
175						- SUPERSTRUCTURE -											
176																	
177	68	4	23-9	S401	STR												
178	392	5	7-1	S501	STR												
179	8	6	24-0	S601	STR												
180																	
181	60	4	5-1	S403	S3	0-5	1-5	1-5	1-5			0-5	0-3				
182	24	4	5-11	S402	S2	0-5	2-2 1/2	0-8	2-2 1/2			0-5	0-3				
183																	
184																	
185																	
186																	
187																	
188																	
189																	
190																	

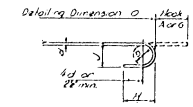

STANDARD HOOK DETAIL

BAR SIZES

Equivalent Size	Present (Numbers)
1/4"	#2
3/8"	#3
1/2"	#4
5/8"	#5
3/4"	#6
7/8"	#7
1"	#8
1 1/8"	#9
1 1/4"	#10
1 1/2"	#11

8. Bar reinforcement metal shall conform to the requirements of the Standard Specifications for new Billet-Steel Concrete Reinforcement Bars (Intermediate Grade) Serial Designation A.A.S.H.O. M31-48 or its latest revision. All bars shall be deformed to conform with A.S.T.M. Specifications A305-49.

ESTIMATED QUANTITIES

Location	Pounds
ABUTMENT NO. 1	696
ABUTMENT NO. 2	724
SUPERSTRUCTURE	4560
TOTAL	5980

ANDOVER

REINFORCING STEEL DETAILS

MA259/25.03M/1960

CKD RLM

SHEET 4 OF 10

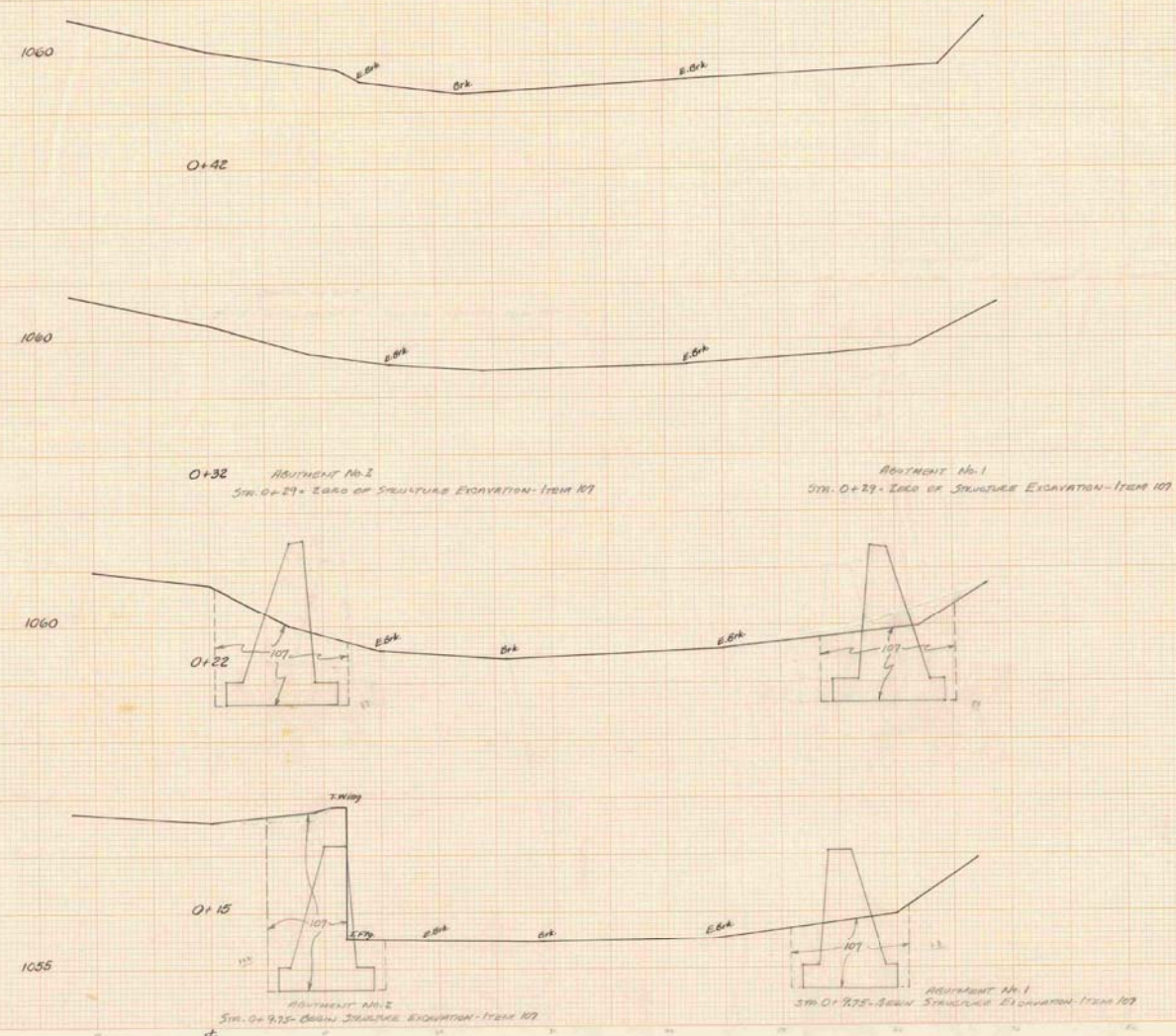

1 INCH – 5 FEET

ANDOVER
CHANNEL SECTIONS

LEVELS BY BURLEY
SECTIONS PLOTTED BY RTB CKD. BY RLM
PLANIMETERED BY RTB CKD. BY GEE
EXAMINED BY
MA 259 NO 25.03M FILED 1960
SHEET 5 OF 10

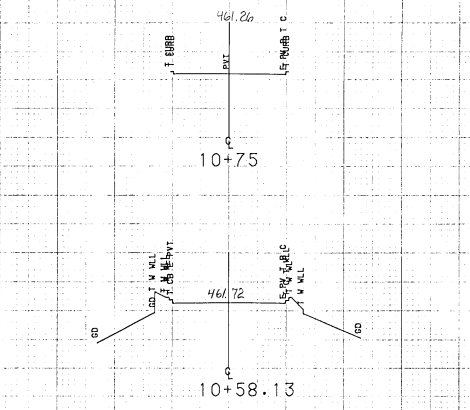

STA 10+55.75

BEGIN BRIDGE

STA 10+56 RT END STONE FILL TYPE II

STA 10+50
END APPROACH
BEGIN PROJECT

STONE FILL TYPE II

STA 10+40 RT BEGIN STONE FILL TYPE II

STA 10+18
BEGIN APPROACH
MATCH 5" NEW PAVEMENT TH 3
INTO EDGE OF PAVEMENT VT. 14

SCALE 10 FEET

FROM STA. 10+00		TO STA. 10+75	
PROJECT NAME	SHARON M4		
NO.	TH2504		PLOTTED 03/12/93
SURVEYED BY	WARNER	01/93	C376
SHEET 20 OF 55 SHEETS			

Vermont Agency of
Transportation
PHASE 1-INTERSTATE
#12302-01

INITIALS

DONE

Box 932

1962

ANDOVER
MA259/25.03m/1960

1962