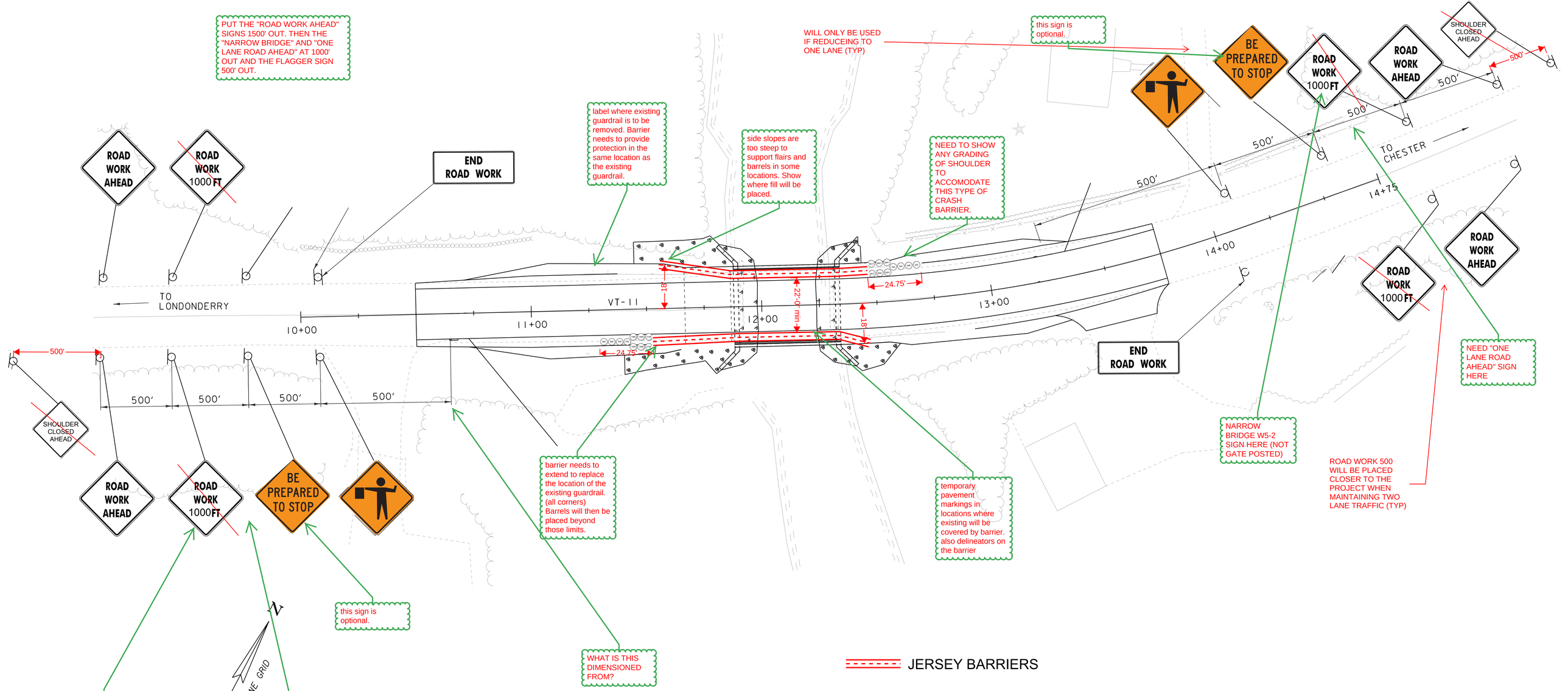

signed and DATED

JERSEY BARRIERS

need a border with corner card

Vermont Agency of Transportation

RECEIVED

CK'D BY D. PETERSON OK'D BY C. CARLSON

July 3, 2015

RESUBMIT YES Rejected

BY C. CARLSON DATE 07/07/2015

WINGWALL WORK TRAFFIC CONTROL PLAN

CrashGard® Manual

Plastic Safety Systems, Inc.

CrashGard®

Sand Barrel/Crash Cushion/Impact Attenuator

Plastic Safety Systems, Inc
2444 Baldwin Road
Cleveland, OH 44104
p: 216-231-8590
p: 800-662-6338
f: 216-231-2702
www.plasticsafety.com

www.crashgard.com

Version 3.1

01/08

US Design Patent D542,685
Other patents pending.

General Information

Manual Contents:

This manual provides the information necessary to specify, purchase, and install the CrashGard Sand Barrel System:

General Information:	Page 2-3
Specifications:	Page 4-6
Shipping Configurations:	Page 6
Array Installation Procedure:	Pages 7-8
Insert Installation Instructions:	Page 9
Sand Fill Measurements:	Page 10
Transport Instructions:	Page 11-12
Recommended Array Designs:	Pages 13-15
Contact Us:	Back Cover

CrashGard® Limitations and Warranty

Limitations

The CrashGard® Sand Barrel System meets NCHRP-350 criteria, Test Level 3, for non-redirective, gating crash cushions. It should not be used for any other function.

Impacts that exceed design capabilities may not result in acceptable crash performances as described in NCHRP-350.

Warranty

Plastic Safety Systems, Inc. (PSS):

- warrants each CrashGard Sand Barrel System is free from manufacturing defects for one (1) year, from date of purchase. (Subject to additional terms and conditions. Please contact PSS for complete warranty.)

- warrants each CrashGard Sand Barrel System against UV degradation for six (6) years from date of purchase, on a pro-rated, "repair or replace" basis.

CrashGard® is a registered trademark of Plastic Safety, Systems, Inc.

FHWA Issues Acceptance Letter for CrashGard®

FHWA Acceptance Letter CC-97

In March, 2007, the FHWA issued acceptance letter CC-97 to Plastic Safety Systems, Inc. (PSS) for the CrashGard® Sand Barrel System.

Summary of CC-97

In CC-97, the FHWA:

- identifies the CrashGard Sand Barrel System as a non-redirective, gating crash cushion that consists of a barrel, insert, and lid, manufactured from HDPE plastic.

- acknowledges that PSS conducted and passed full-scale crash tests NCHRP-350, 3-40 through 3-44.

- confirms that CrashGard meets the criteria of NCHRP-350 Test Level 3 for non-redirective, gating crash cushions.

- states that the CrashGard may be used on the National Highway System.

For more information about the CrashGard® Sand Barrel System:

Call us at 800-662-6338.
Visit our website at **www.crashgard.com.**
Contact your local sales representative, as listed on the back cover.

General Information (cont'd)

Description of Sand Barrel:

The Plastic Safety Systems, Inc. (PSS) CrashGard® Sand Barrel System is a non-redirective, gating sand barrel, or crash cushion. Sand barrels are designed to protect fixed objects, whether permanent or temporary. Sand barrels are designed to reduce the likelihood of a vehicle impacting the object.

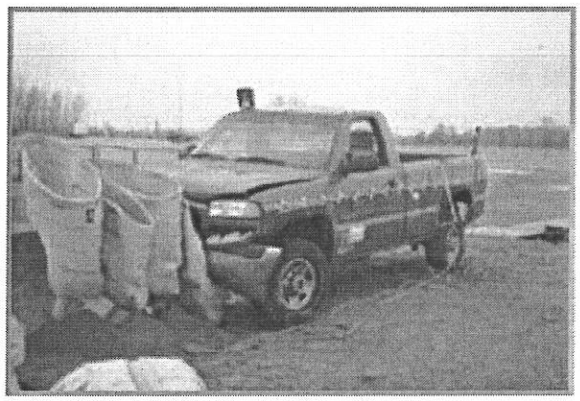

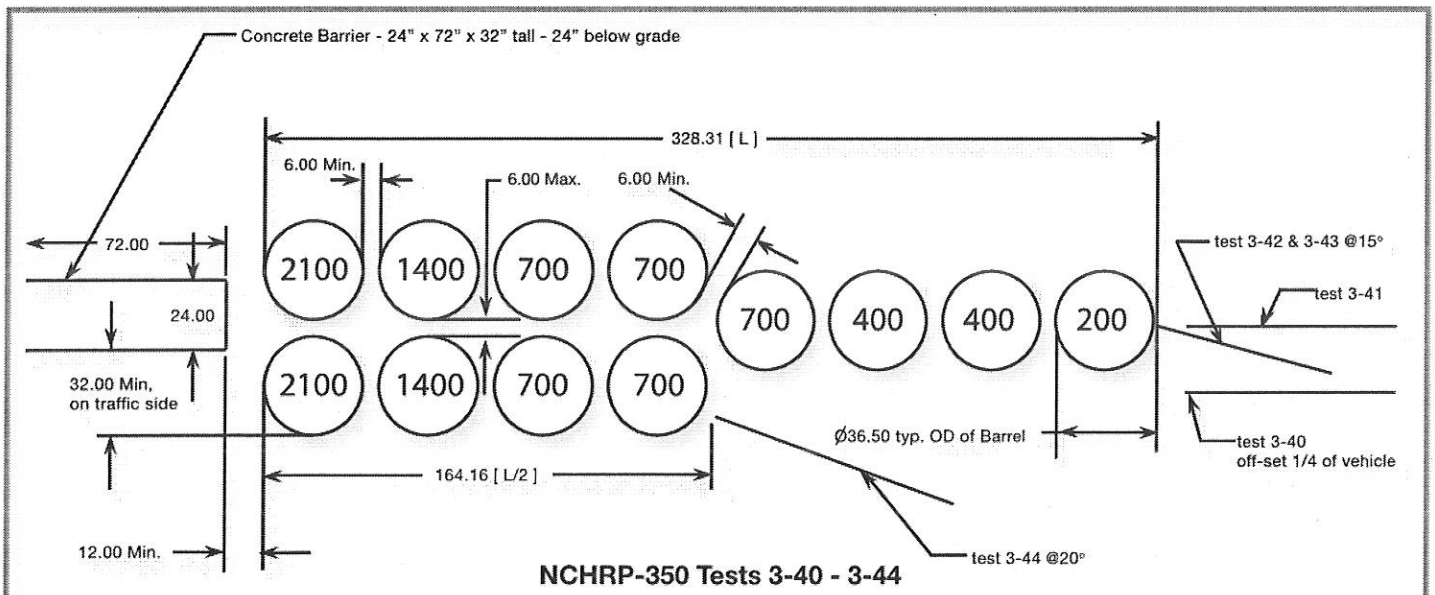

NCHRP-350 Tests 3-40 - 3-44

All lengths in inches. All weights in pounds.

Function of Sand Barrel:

As the *AASHTO* *Roadside Design Guide* states, sand barrels absorb energy.

- Sand barrels stop the impact vehicle in a short distance and at a controlled rate.

- The controlled rate reduces the potential for injury to the occupants.

- Sand barrels allow the vehicle to pass through the array but they do not redirect the vehicle.

NCHRP-350 Certification:

To ensure effective performance and compliance, PSS tested the CrashGard Sand Barrel System to NCHRP-350 Tests 3-40 through 3-44, at Test Level 3.

CrashGard passed all applicable **NCHRP-350** tests and is certified to **Test Level 3** (62 miles / 100 kilometers per hour).

The **FHWA** has issued acceptance letter **CC-97** for the CrashGard Sand Barrel System. See previous page for details.

CrashGard® Insert Instructions

1) Determine which barrels in the array require Inserts. Only those barrels with weights of 200, 400 or 700 lbs. require Inserts. Barrels of 1,400 and 2,100 lbs. do not require Inserts.

2) Always install the CrashGard Insert with the cone-shaped side face up.

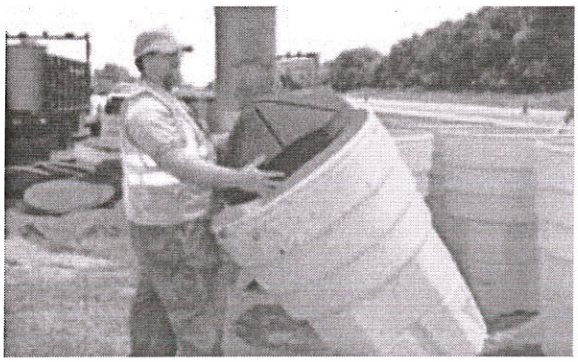

Figure A: Cone-shaped side always faces up.

3) Figure A: lean the barrel inward for convenience. Hold the Insert, cone-shaped side face up, with both hands.

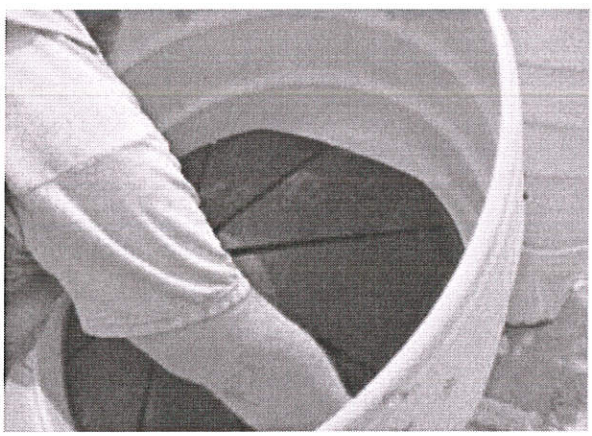

Figure B: Match the shapes.

4) Figure B: The CrashGard Insert is a square-sided unit. Make sure that the configuration of the Insert matches the configuration of the barrel shelf upon which it rests. Slowly drop the Insert into position.

5) Figure C: once properly aligned, press-fit the Insert into the barrel. There should be no rocking or sliding; the Insert should fit snugly.

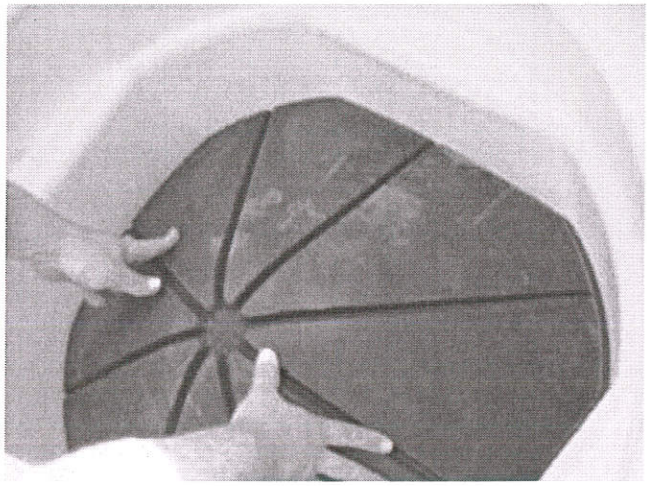

Figure C: Press-fit the insert.

6) Figure D: fill the barrel with sand.

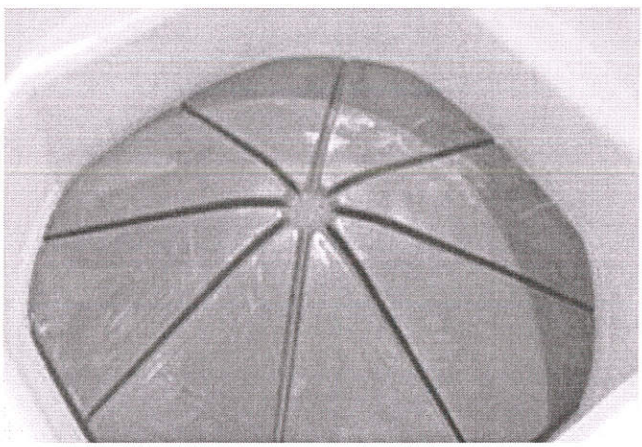

Figure D: Ready for Sand.

Refer to the previous page for filling instructions. Refer to the next page for measurements, if needed.

CrashGard® Sand Fill Measurements

Dimensions in Inches [Millimeters]

To determine sand fill levels from the inside of the barrel, use the measurements listed below
Measure from the TOP of the barrel to determine the appropriate fill level.

For 1,400 & 2,100 lbs.

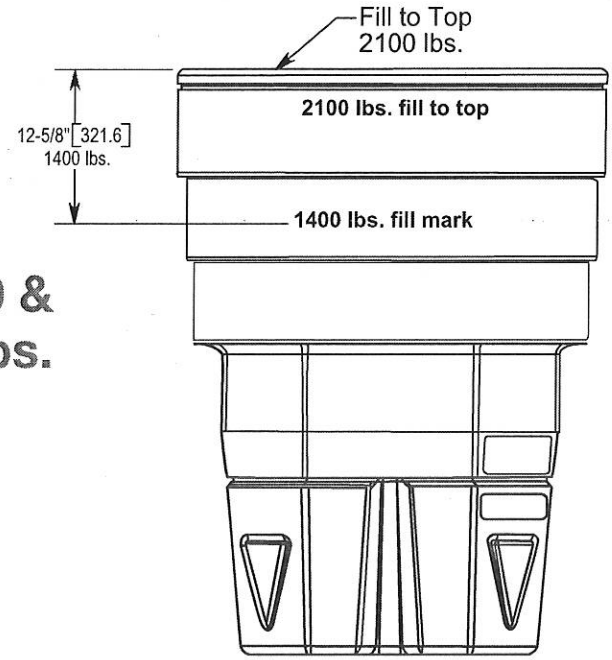

without Insert

For 200, 400 & 700 lbs.

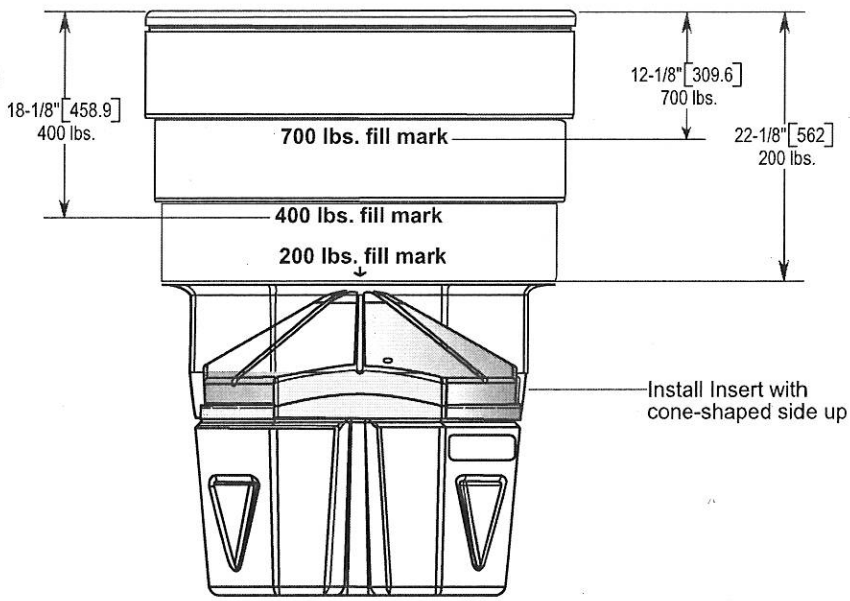

with Insert

Recommended Arrays

Design Velocity 55 mph
12 barrels/array

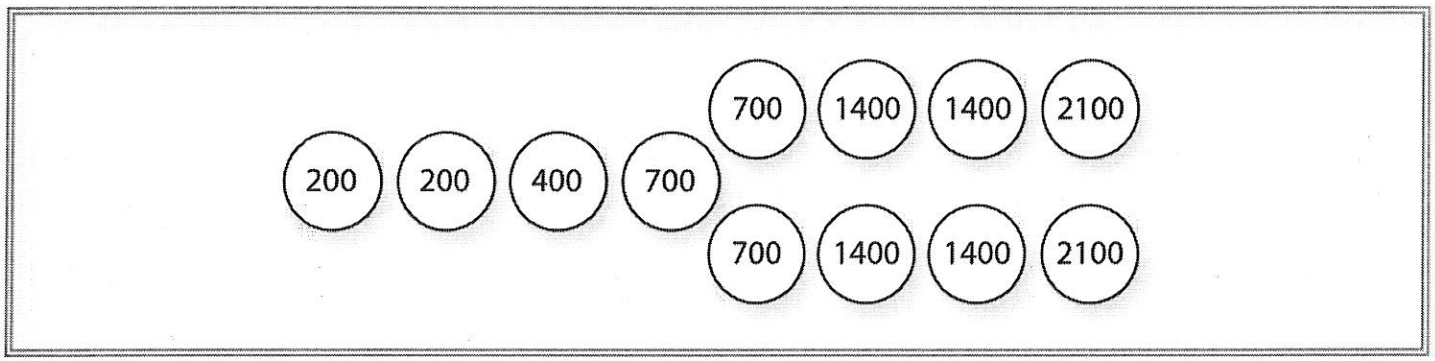

Design Velocity 50 mph
10 barrels/array

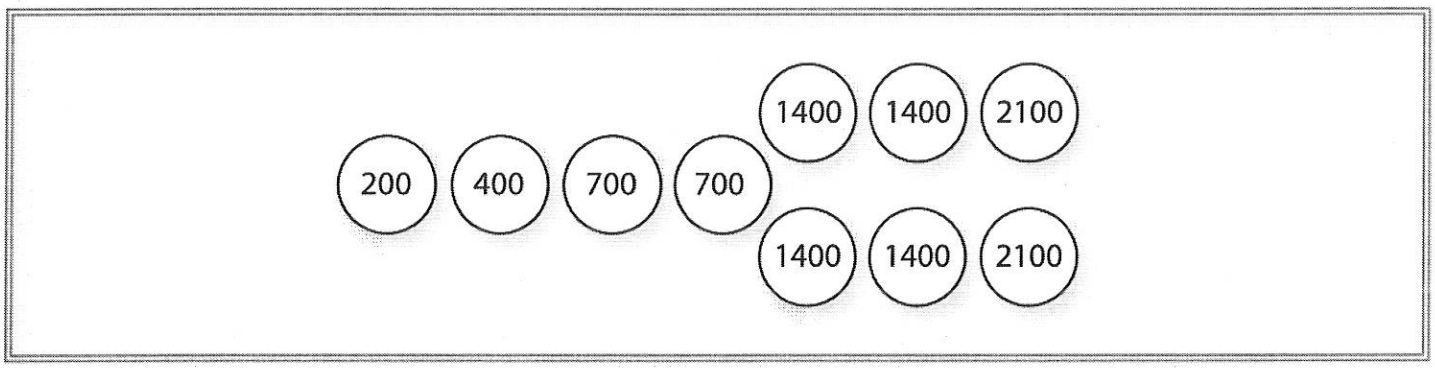

Design Velocity 45 mph
9 barrels/array

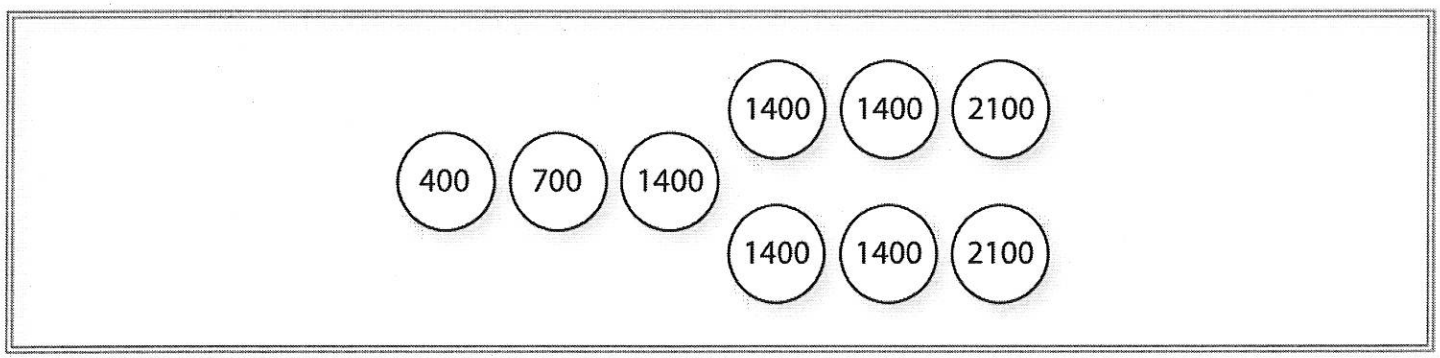

Weights listed are in pounds of sand. For metric weights and speeds, see the conversion chart on page 15. PSS recommends the above arrays for the designated speeds, as noted. When combining CrashGard along with sand barrels from other manufacturers, (commonly referred to as mixed arrays) PSS recommends the installer follow the manufacturers' recommendation, design or plan that utilizes the highest number of barrels.