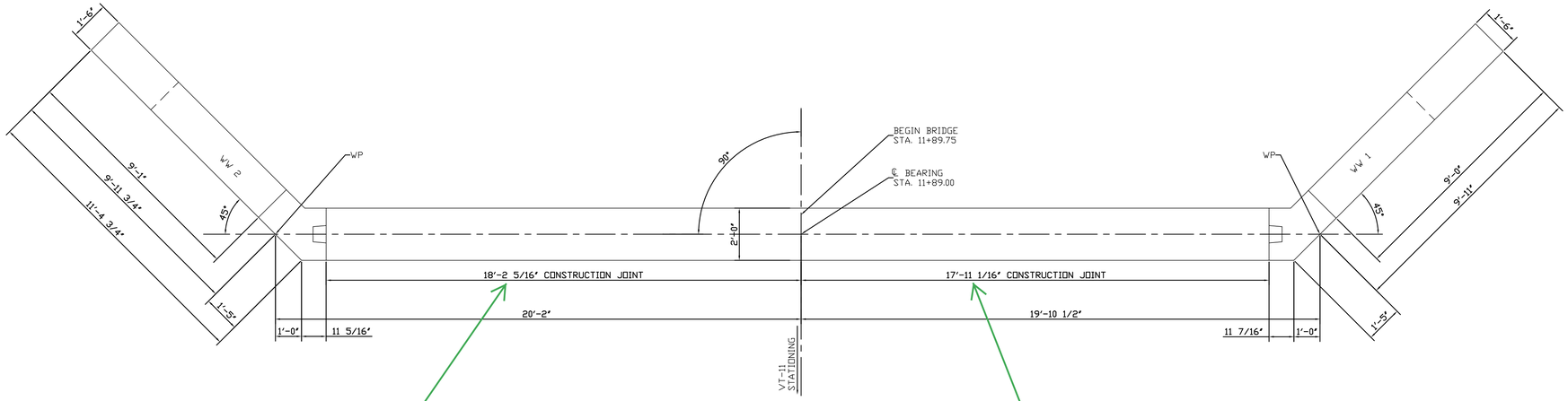

why so much larger than the 17'-11 3/4"?

this is less than width of slabs on this side. 17'-11 3/4"

ABUTMENT NO. 1 PLAN

SCALE 3/8" = 1'-0"

Joint filler

1069.35 - 3" - 18" - 0.75"= 1067.54 (this is to top of concrete at CL)

.90

1067.18

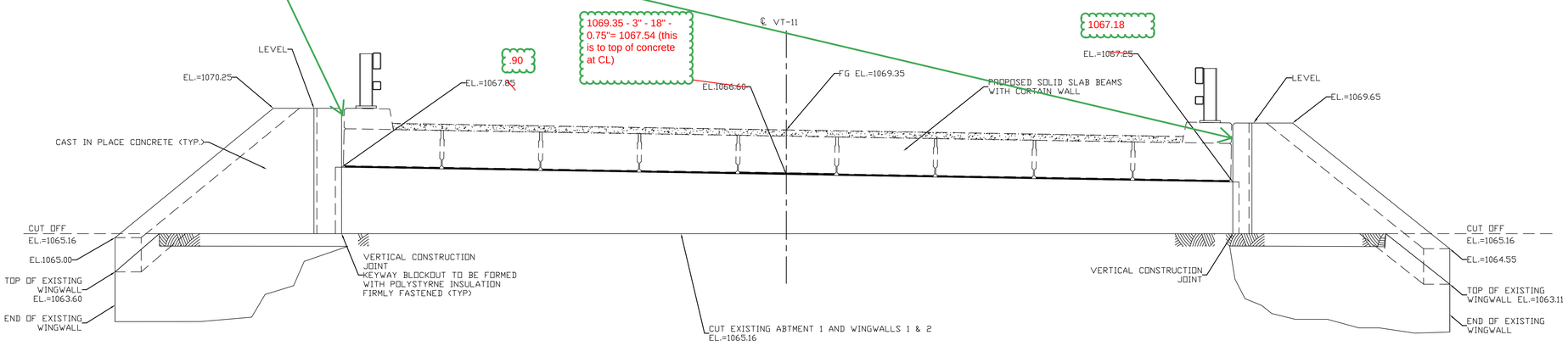

ABUTMENT NO. 1 ELEVATION

SCALE 3/8" = 1'-0"

REVIEWED
By D. Peterson at 10:08 am, Jun 16, 2015

NOTE:

NF = NEAR FACE
FF = FAR FACE
EF = EACH FACE
▲ = CUT TO FIT IN FIELD
3" CLEAR, UNLESS OTHERWISE SPECIFIED ON THE PLANS.
2'-2" BAR LAP UNLESS OTHERWISE SPECIFIED ON THE PLANS.
SECTION OF EXISTING ABUTMENT AND WINGWALLS TO BE CUT.

REV. NO.	DATE:

RENAUD BROS. INC.
283 FT. BRIDGEMAN RD. VERNON VT., 05354
PH. (802) 257-7383 FAX (802) 257-7308

SHEET NAME: ABUTMENT 1 PLAN AND ELEVATION

PROJECT NAME: ANDOVER

PROJECT NO: BHF 016-1 (29)

DRAWN BY: CE | CHK'D BY: | DATE: 06/03/2015

SHEET NO. 1 OF 7

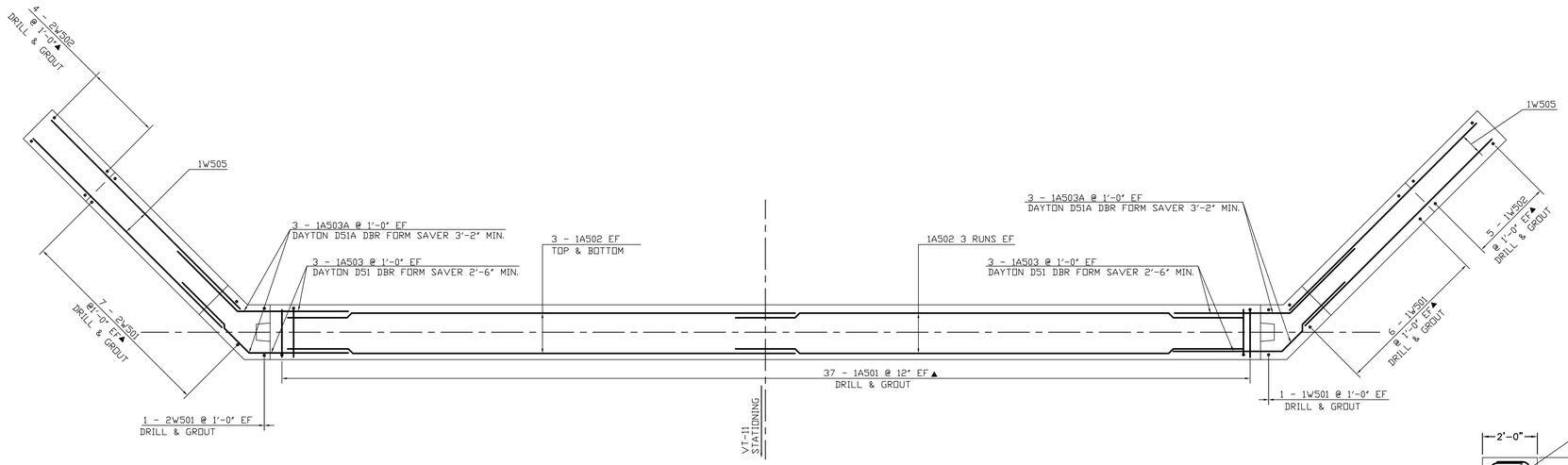

ABUTMENT NO. 1 BELOW BRIDGE SEAT REINFORCING LAYOUT

SCALE 3/8" = 1'-0"

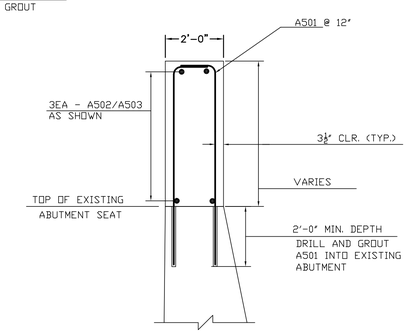

ABUTMENT TYPICAL

SCALE 3/8" = 1'-0"

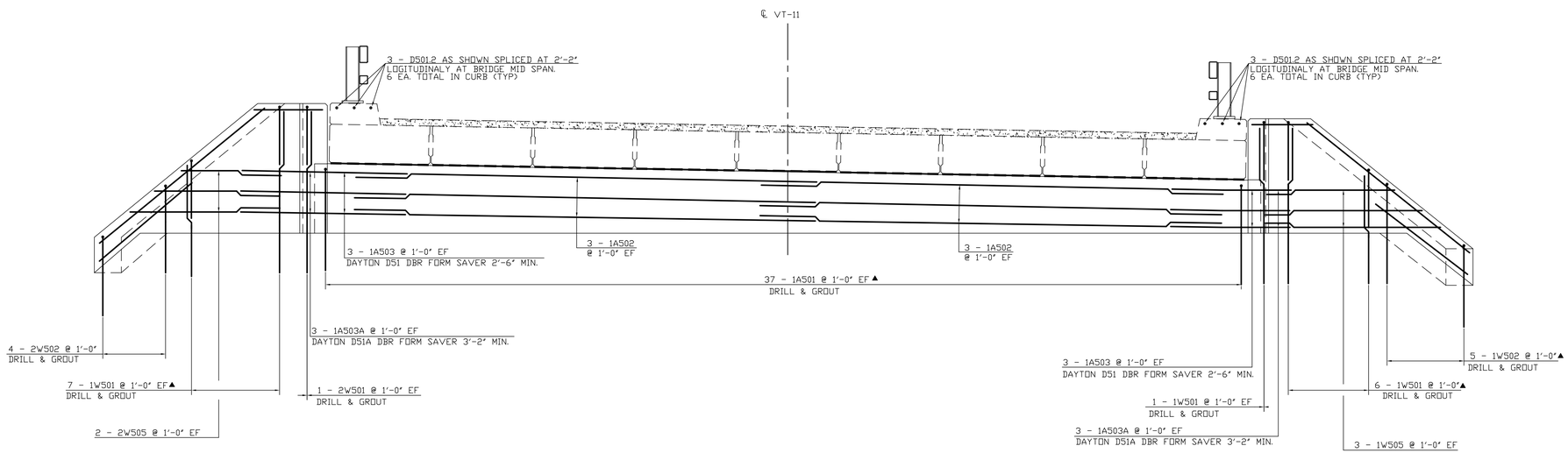

ABUTMENT NO. 1 REINFORCING ELEVATION

SCALE 3/8" = 1'-0"

NOTE:

NF = NEAR FACE
FF = FAR FACE
EF = EACH FACE
▲ = CUT TO FIT IN FIELD
3" CLEAR, UNLESS OTHERWISE SPECIFIED ON THE PLANS.
2'-2" BAR LAP UNLESS OTHERWISE SPECIFIED ON THE PLANS.

DRILL AND GROUT ABUTMENT AS SHOWN IN THE "ABUTMENT TYPICAL" ON THIS SHEET

DRILL AND GROUT WINGWALLS AS SHOWN IN THE "WINGWALL TYPICAL" ON "WINGWALL 1 & 2 REINFORCING" SHEET

REVIEWED
By D. Peterson at 10:08 am, Jun 16, 2015

REV. NO.	DATE:

BRENAUD BROS. INC.
283 FT. BRIDGEMAN RD. VERNON VT., 05354
PH. (802) 257-7383 FAX (802) 257-7308

SHEET NAME: ABUTMENT 1 REINFORCING			
PROJECT NAME: ANDOVER			SHEET NO. 2 OF 7
PROJECT NO: BHF 016-1 (29)			
DRAWN BY: CE	CHK'D BY:	DATE: 06/03/2015	

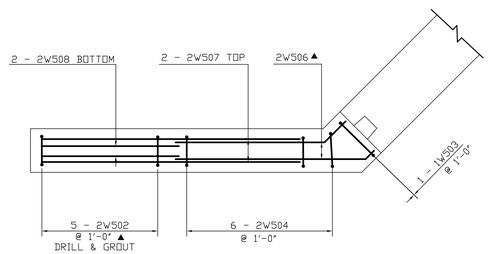

WINGWALL NO. 2 PLAN

SCALE 3/8" = 1'-0"

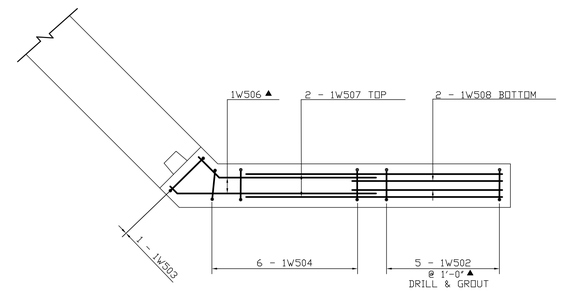

WINGWALL NO. 1 PLAN

SCALE 3/8" = 1'-0"

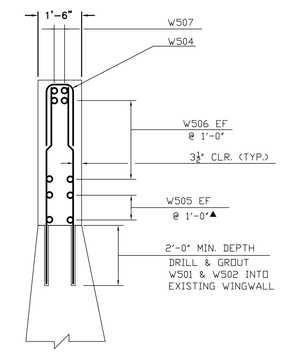

WINGWALL TYPICAL

SCALE 3/8" = 1'-0"

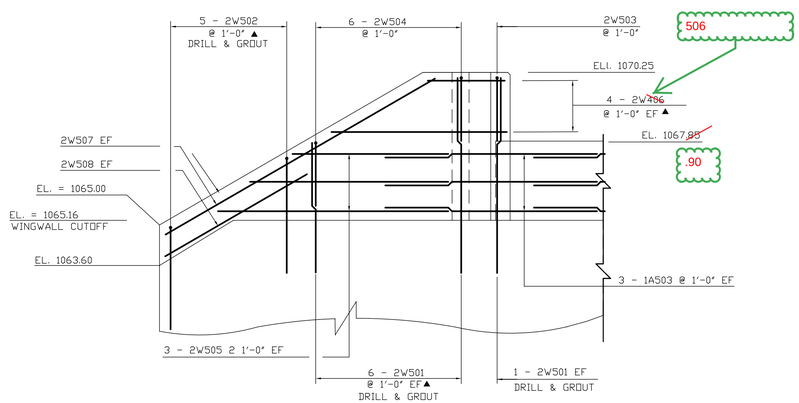

WINGWALL NO. 2 ELEVATION

SCALE 3/8" = 1'-0"

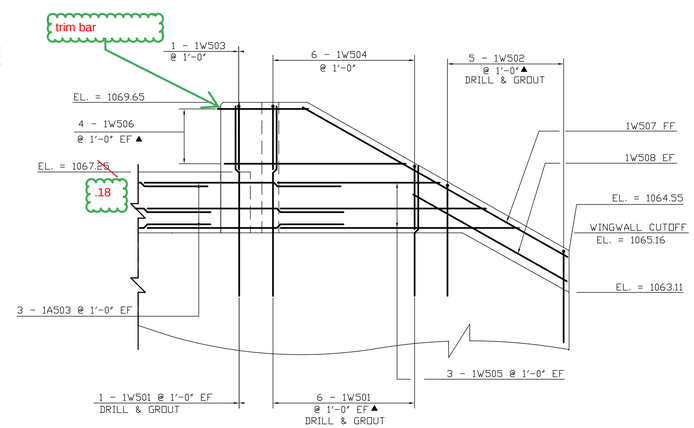

WINGWALL NO. 1 ELEVATION

SCALE 3/8" = 1'-0"

NOTE:

NF = NEAR FACE
FF = FAR FACE
EF = EACH FACE
▲ = CUT TO FIT IN FIELD
3" CLEAR, UNLESS OTHERWISE SPECIFIED ON THE PLANS.
2'-2" BAR LAP UNLESS OTHERWISE SPECIFIED ON THE PLANS.

DRILL AND GROUT ABUTMENT AS SHOWN IN THE "ABUTMENT TYPICAL" ON "ABUTMENT 1 PLAN & ELEVATION" SHEET

DRILL AND GROUT WINGWALLS AS SHOWN IN THE "WINGWALL TYPICAL" ON "WINGWALL 1 &2 REINFORCING" SHEET

REVIEWED
By D. Peterson at 10:08 am, Jun 16, 2015

REV. NO.	DATE:

BRENAUD BROS. INC.
283 FT. BRIDGEMAN RD. VERNON VT., 05354
PH. (802) 257-7383 FAX: (802) 257-7508

SHEET NAME: ABUTMENT 1 PLAN AND ELEVATION

PROJECT NAME: ANDOVER

PROJECT NO: BHF 016-1 (29)

DRAWN BY: CE | CHK'D BY: | DATE: 06/01/2015

SHEET NO. 3 OF 4

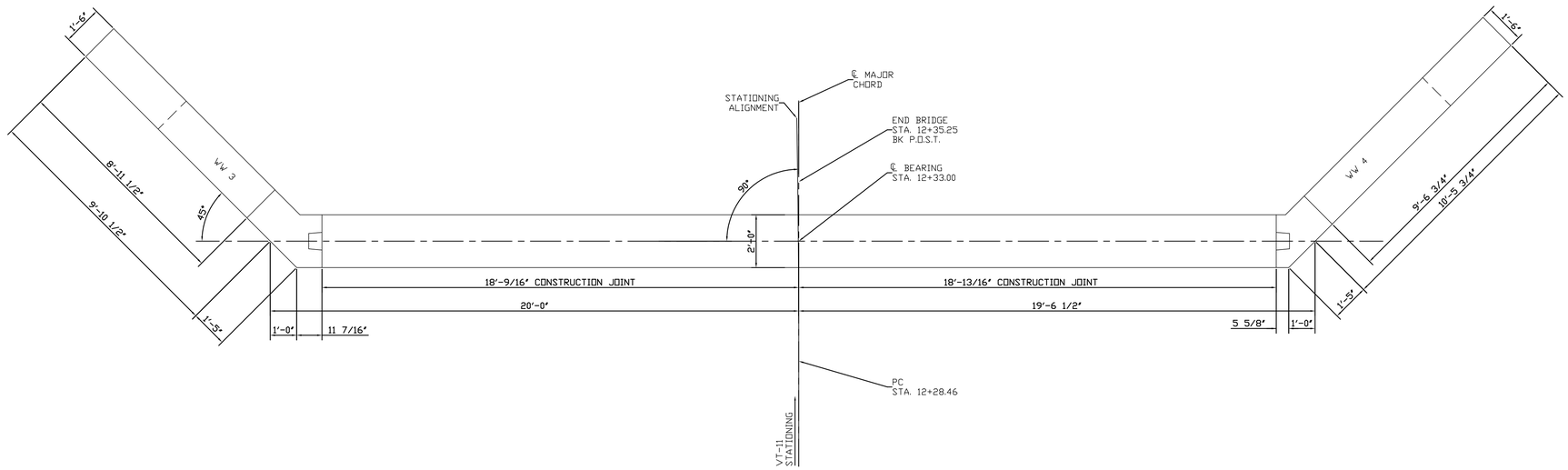

ABUTMENT NO. 2 PLAN

SCALE 3/8" = 1'-0"

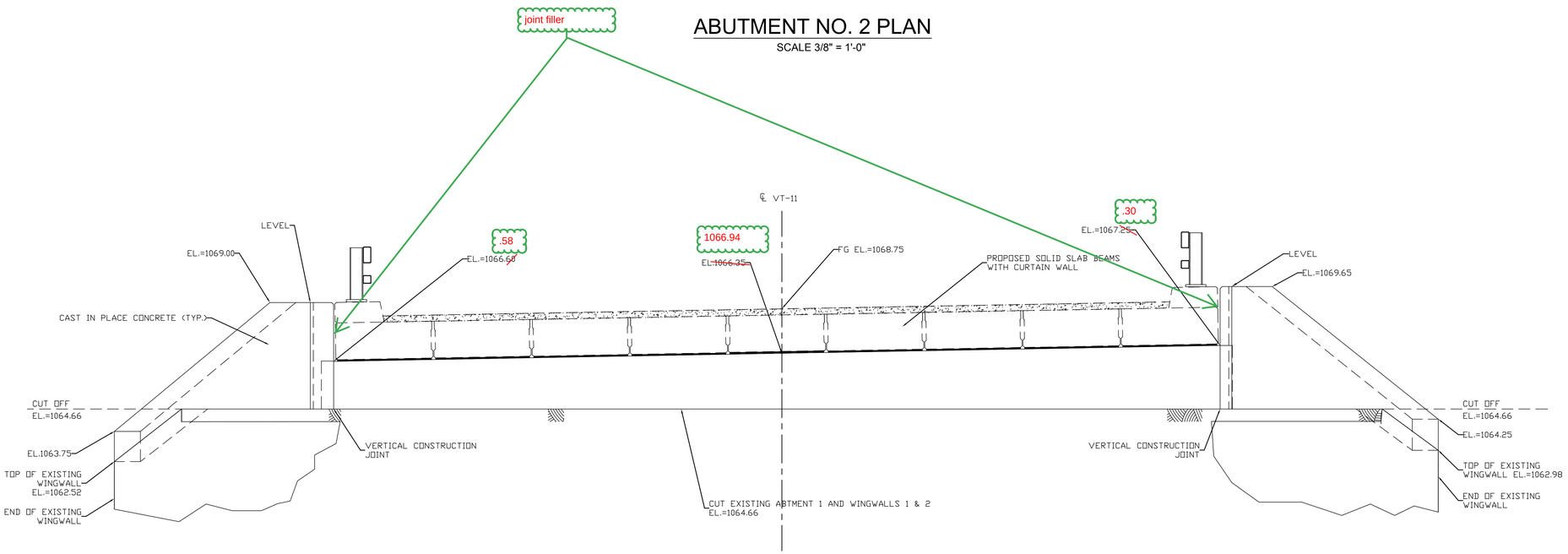

ABUTMENT NO. 2 ELEVATION

SCALE 3/8" = 1'-0"

NOTE:

NF = NEAR FACE
FF = FAR FACE
EF = EACH FACE
▲ = CUT TO FIT IN FIELD
3" CLEAR, UNLESS OTHERWISE SPECIFIED ON THE PLANS.
2'-2" BAR LAP UNLESS OTHERWISE SPECIFIED ON THE PLANS.
SECTION OF EXISTING ABUTMENT AND WINGWALLS TO BE CUT.

REVIEWED
By D. Peterson at 10:08 am, Jun 16, 2015

REV. NO.	DATE:

RENAUD BROS. INC.
283 FT. BRIDGEMAN RD. VERNON VT., 05354
PH. (802) 257-7385 FAX: (802) 257-7308

SHEET NAME: ABUTMENT 2 PLAN AND ELEVATION
PROJECT NAME: ANDOVER
PROJECT NO: BHF 016-1 (29)
DRAWN BY: CE
CHK'D BY:
DATE: 06/03/2015
SHEET NO. 4 OF 7

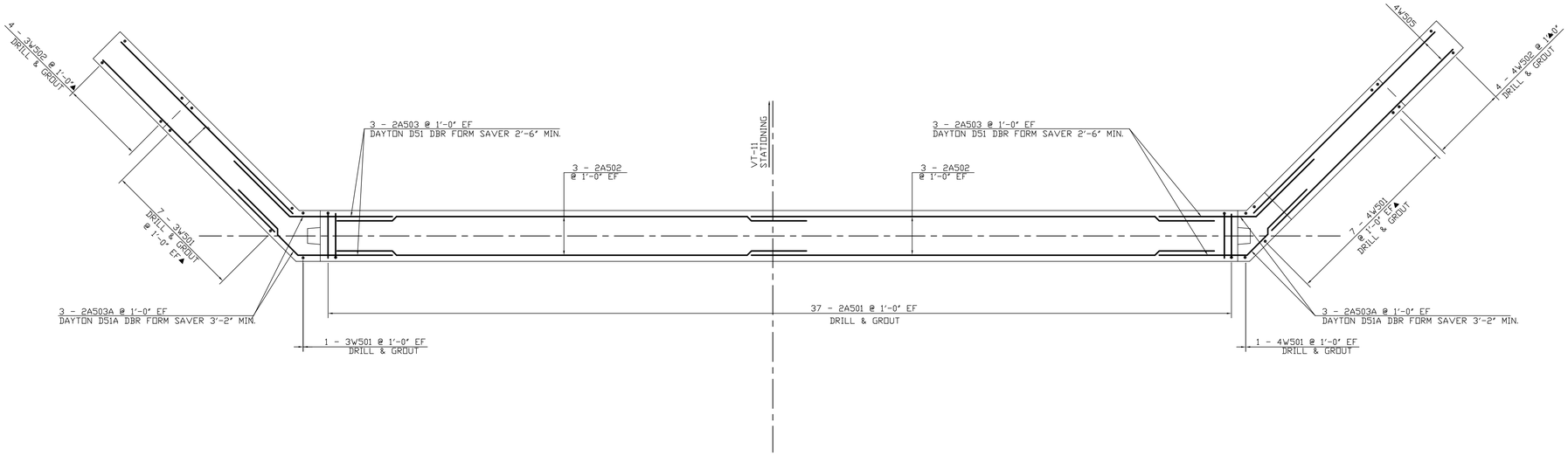

ABUTMENT NO. 2 BELOW BRIDGE SEAT REINFORCING LAYOUT

SCALE 3/8" = 1'-0"

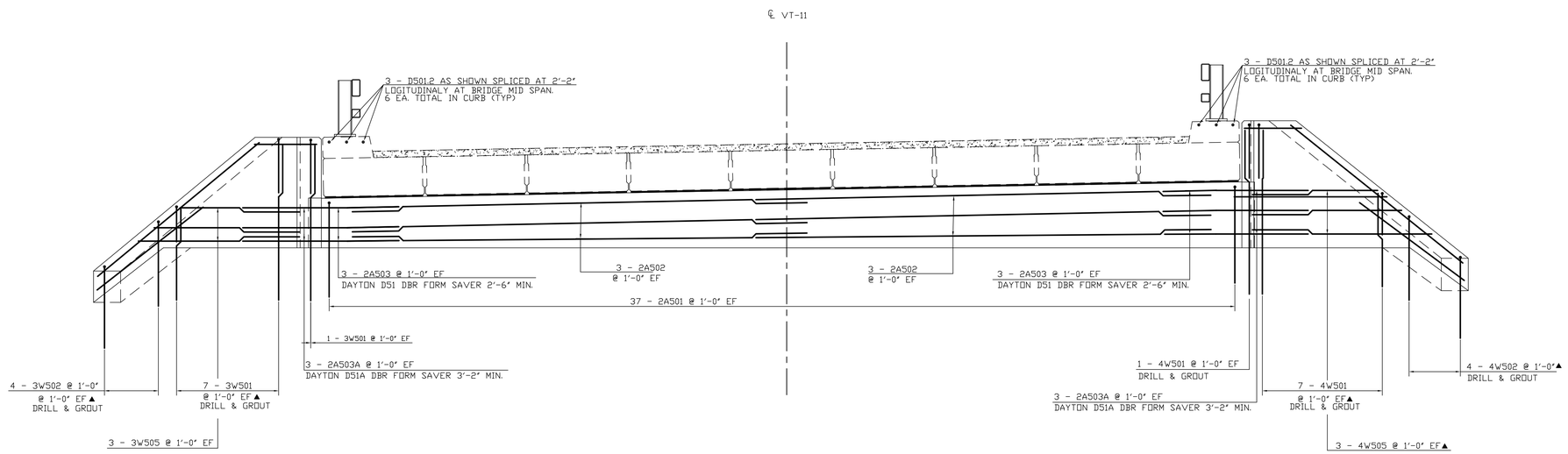

ABUTMENT NO. 2 REINFORCING ELEVATION

SCALE 3/8" = 1'-0"

NOTE:

NF = NEAR FACE
FF = FAR FACE
EF = EACH FACE
▲ = CUT TO FIT IN FIELD
3" CLEAR, UNLESS OTHERWISE SPECIFIED ON THE PLANS.
2'-2" BAR LAP UNLESS OTHERWISE SPECIFIED ON THE PLANS.

DRILL AND GROUT ABUTMENT AS SHOWN IN THE "ABUTMENT TYPICAL" ON "ABUTMENT 1 REINFORCING" SHEET

DRILL AND GROUT WINGWALLS AS SHOWN IN THE "WINGWALL TYPICAL" ON "WINGWALL 1 & 2 REINFORCING" SHEET

REVIEWED
By D. Peterson at 10:08 am, Jun 16, 2015

REV. NO.	DATE:

BRENAUD BROS. INC.
285 FT. BRIDGEMAN RD. VERNON VT., 05354
PH. (802) 257-7585 FAX (802) 257-7508

SHEET NAME: ABUTMENT 2 REINFORCING

PROJECT NAME: ANDOVER

PROJECT NO: BHF 016-1 (29)

SHEET NO. 5 OF 7

DRAWN BY:	CHK'D BY:	DATE:
CE		06/03/2015

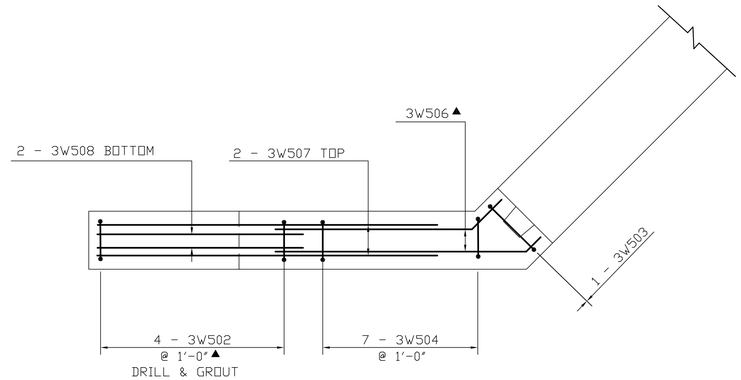

WINGWALL NO. 3 PLAN

SCALE 1/2" = 1'-0"

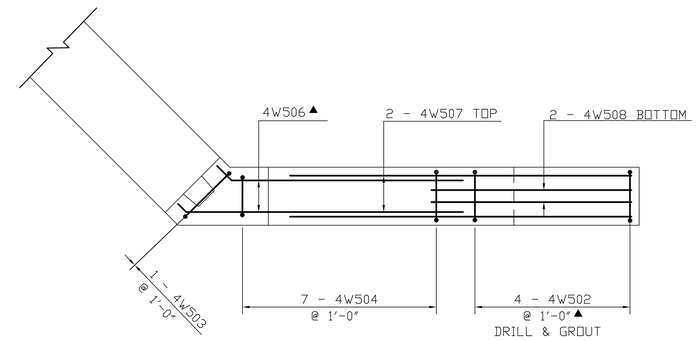

WINGWALL NO. 4 PLAN

SCALE 1/2" = 1'-0"

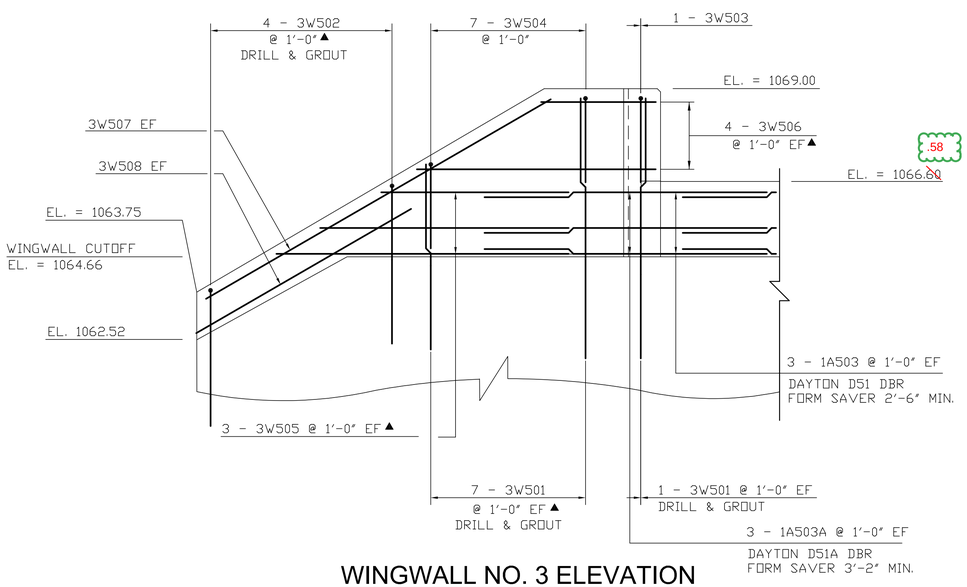

WINGWALL NO. 3 ELEVATION

SCALE 1/2" = 1'-0"

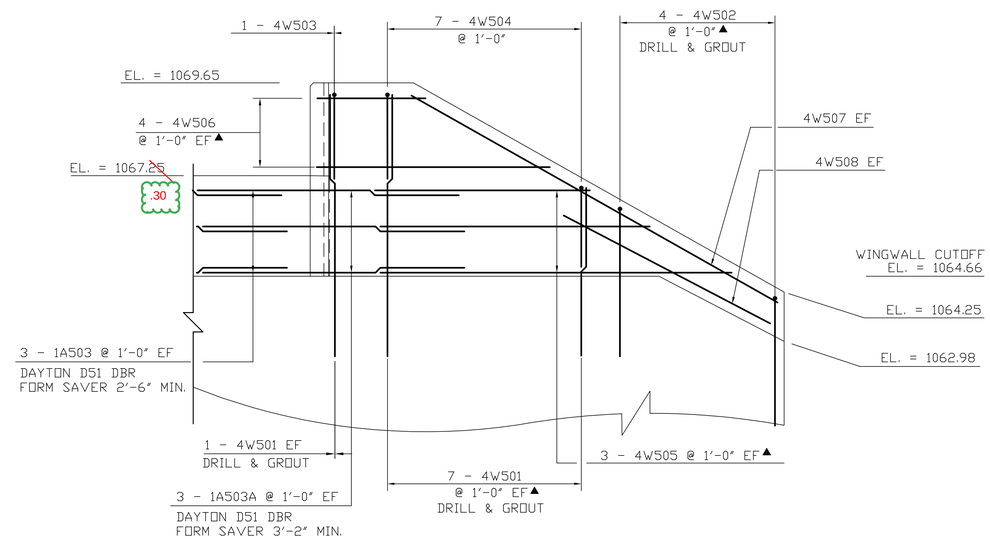

WINGWALL NO. 4 ELEVATION

SCALE 1/2" = 1'-0"

NOTE:

NF = NEAR FACE
FF = FAR FACE
EF = EACH FACE
▲ = CUT TO FIT IN FIELD
3" CLEAR, UNLESS OTHERWISE SPECIFIED ON THE PLANS.
2'-2" BAR LAP UNLESS OTHERWISE SPECIFIED ON THE PLANS.

DRILL AND GROUT WINGWALLS AS SHOWN IN THE "WINGWALL TYPICAL" ON "WINGWALL 1 & 2 REINFORCING" SHEET

REVIEWED
By D. Peterson at 10:08 am, Jun 16, 2015

REV. NO.	DATE:

RENAUD BROS. INC.
283 FT. BRIDGEMAN RD. VERNON VT., 05354
PH. (802) 257-7585 FAX (802) 257-7508

SHEET NAME: WINGWALL 3 & 4 REINFORCING
PROJECT NAME: ANDOVER
PROJECT NO: BHF 016-1 (29)
DRAWN BY: CE
CHK'D BY:
DATE: 06/03/2015
SHEET NO. 6 OF 7

ITEM	EACH	SIZE	LENGTH	MARK	TYPE	A	B	C	D	E	F	G	H	J	K	R	O
	CURBING																
✳	13	5	25'- 1"	D501.2	STR	25'- 1"											
	ABUTMENT #1																
	12	5	18'- 6"	1A502	STR	18'- 6"											
▲	74	5	5'- 11"	1A501	S-10		1'- 5"	4'- 6"									
	15	5	2'- 6"	1A503	STR	2'- 6"											
	15	5	3'- 2"	1A503A	22		1'- 0"	2'- 2"					8 1/2"		8 1/2"		
	ABUTMENT #2																
	12	5	18'- 6"	2A502	STR	18'- 6"											
▲	74	5	5'- 9"	2A501	S-10		1'- 5"	4'- 4"									
	12	5	2'- 6"	2A503	STR	2'- 6"											
	12	5	3'- 2"	2A503A	22		1'- 0"	2'- 2"					8 1/2"		8 1/2"		
	WINGWALL #1																
	14	5	6'- 3"	1W501	STR	6'- 3"											
▲	6	5	9'- 8"	1W505	STR	9'- 8"											
	2	5	10'- 1"	1W507	STR	10'- 1"											
✳	3	5	5'- 1"	1W508	STR	5'- 1"											
▲	5	5	7'- 11"	1W502	S-10		3'- 6"	0'- 11"	3'- 6"								
	1	5	5'- 9"	1W503	S-10		2'- 2"	1'- 5"	2'- 2"								
	6	5	5'- 3"	1W504	S-10		2'- 2"	0'- 11"	2'- 2"								
▲	8	5	7'- 6"	1W506	22		1'- 0"	6'- 6"					0'- 9"		0'- 9"		
	WINGWALL #2																
▲	16	5	6'- 5"	2W501	STR	6'- 3"											
▲	6	5	9'- 9"	2W505	STR	9'- 9"											
	2	5	10'- 3"	2W507	STR	10'- 3"											
	2	5	5'- 1"	2W508	STR	5'- 1"											
▲	4	5	8'- 3"	2W502	S-10		3'- 8"	0'- 3"	3'- 8"								
	1	5	5'- 9"	2W503	S-10		2'- 2"	1'- 5"	2'- 2"								
	7	5	5'- 3"	2W504	S-10		2'- 2"	0'- 11"	2'- 2"								
▲	8	5	8'- 1"	2W506	22		1'- 4"	6'- 9"					0'- 11"		0'- 11"		
	WINGWALL #3																
▲	16	5	6'- 1"	3W501	STR	6'- 1"											
▲	6	5	9'- 8"	3W505	STR	9'- 8"											
	2	5	10'- 5"	3W507	STR	10'- 5"											
	2	5	5'- 3"	3W508	STR	5'- 3"											
▲	4	5	8'- 11"	3W502	S-10		4'- 0"	0'- 11"	4'- 0"								
	1	5	5'- 9"	3W503	S-10		2'- 2"	1'- 5"	2'- 2"								
	7	5	5'- 3"	3W504	S-10		2'- 2"	0'- 11"	2'- 2"								
▲	8	5	6'- 8"	3W506	22		1'- 4"	6'- 9"					0'- 11"		0'- 11"		
▲	**WINGWALL #4**																
▲	14	5	6'- 6"	4W501	STR	6'- 6"											
	4	5	10'- 4"	4W502	STR	10'- 4"											
	2	5	10'- 11"	4W507	STR	10'- 11"											
	2	5	5'- 6"	4W508	STR	5'- 6"											
▲	4	5	7'- 9"	4W502	S-10		3'- 5"	0'- 11"	3'- 5"								
	1	5	5'- 9"	4W503	S-10		2'- 2"	1'- 5"	2'- 2"								
	7	5	5'- 3"	4W504	S-10		2'- 2"	0'- 11"	2'- 2"								
▲	8	5	7'- 10"	4W506	22		0'- 9"	7'- 1"					0'- 6"		0'- 6"		

The .2 designates that the bars should be Level II. Epoxy coated are ok here.

ITEM	EACH	SIZE	LENGTH	MARK	TYPE	A	B	C	D	E	F	G	H	J	K	R	O

~ NOTES ~

1. UNLESS OTHERWISE DESIGNATED, ALL BAR REINFORCEMENT FOR CONCRETE IN SIZES UP TO AND INCLUDING NO. 18 SHALL CONFORM TO THE REQUIREMENTS OF THE "SPECIFICATIONS FOR DEFORMED BILLET-STEEL BARS FOR CONCRETE REINFORCEMENT", AASHTO M 31 (ASTM A 615-SI). ALL BARS SHALL BE GRADE 60, UNLESS OTHERWISE DESIGNATED
2. FOR TYPICAL BENDING DETAILS, RECOMMENDED PIN DIAMETER "D" OF BENDS AND HOOKS, AND OTHER STANDARD PRACTICE, SEE CURRENT CONCRETE REINFORCING STEEL INSTITUTE "MANUAL OF STANDARD PRACTICE".
3. BARS WHICH REQUIRE MORE ACCURATE BENDING THAN STANDARD PRACTICES SHOULD HAVE LIMITS INDICATED.
4. ALL DIMENSIONS ARE OUT TO OUT OF BAR EXCEPT "A" AND "G" ON STANDARD 180 DEGREE AND 135 DEGREE HOOKS.
5. "J" DIMENSION ON 180 DEGREE HOOKS TO BE SHOWN ONLY WHERE NECESSARY TO RESTRICT HOOK SIZE. OTHERWISE, STANDARD HOOKS ARE TO BE USED.
6. "H" DIMENSION ON STIRRUPS TO BE SHOWN ONLY WHEN NECESSARY TO MAINTAIN CLEARANCES.
7. WHERE SLOPE DIFFERS FROM 45 DEGREES, DIMENSIONS "H" AND "K" MUST BE SHOWN.
8. ▲ DENOTES BARS TO BE CUT IN FIELD.
9. ✳ DENOTES ONE EXTRA BAR ADDED FOR TESTING PURPOSES.
10. △ DENOTES TWO EXTRA BARS ADDED FOR TESTING PURPOSES.
11. .3 IN BAR MARK SUFFIX DENOTES LEVEL III REINFORCING STEEL.

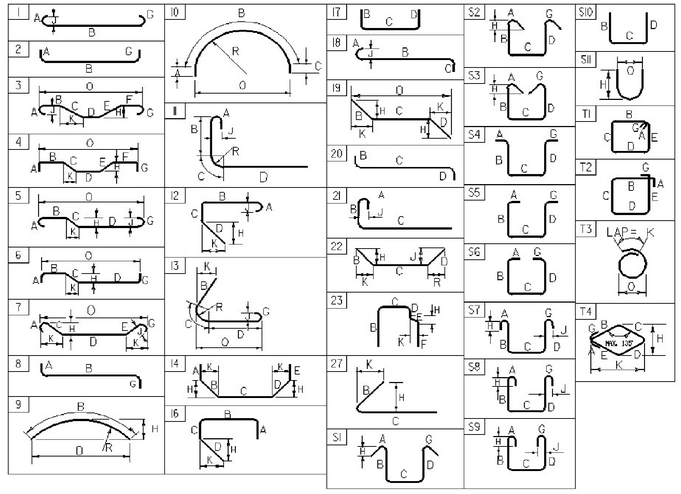

ASTM STANDARD REINFORCING BARS

BAR SIZE DESIGNATION	WEIGHT POUNDS PER FOOT	NOMINAL DIMENSIONS ROUND SECTION		
		DIAMETER INCHES	AREA INCHES ^{2}	PERIMETER INCHES
#3	0.376	0.375	0.11	1.178
#4	0.668	0.500	0.20	1.571
#5	1.043	0.625	0.31	1.963
#6	1.502	0.750	0.44	2.356
#7	2.044	0.875	0.60	2.749
#8	2.670	1.000	0.79	3.142
#9	3.400	1.128	1.00	3.544
#10	4.303	1.270	1.27	3.990
#11	5.313	1.410	1.56	4.430
#14	7.65	1.693	2.25	5.32
#18	13.60	2.257	4.00	7.09

REVIEWED
By D. Peterson at 10:08 am, Jun 16, 2015

REV. NO.	DATE:

RENAUD BROS. INC.
285 FT. BRIDGEMAN RD. VERNON VT., 05354
PH. (802) 257-7585 FAX (802) 257-7508

SHEET NAME: REINFORCING SCHEDULE
PROJECT NAME: ANDOVER
PROJECT NO: BHF 016-1 (29)
DRAWN BY: CE
CHK'D BY:
DATE: 06/03/2015
SHEET NO. 7
OF 7