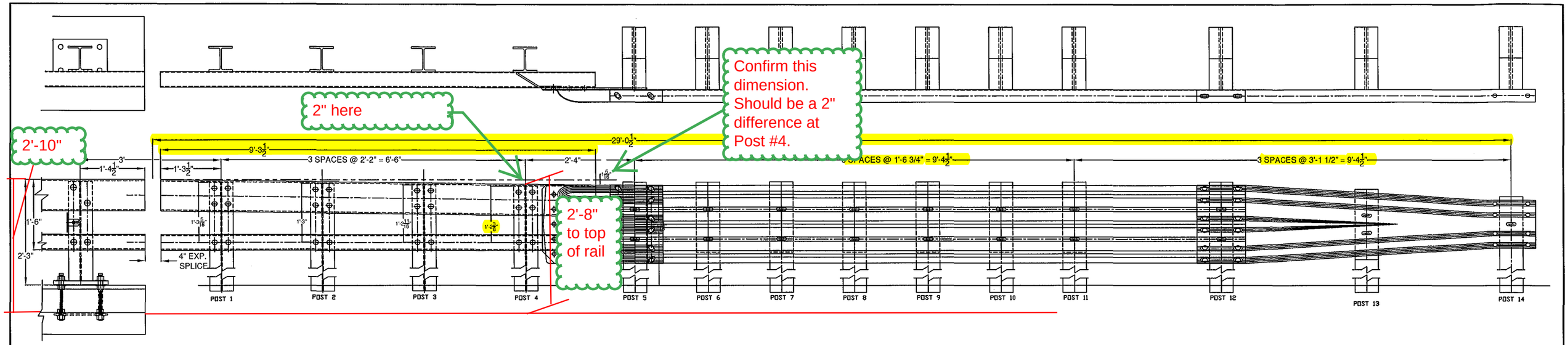


## HARDWARE APPLICATION

| | QTY | DESCRIPTION | APPLICATION |
|---|---|---|---|
| A | 8 | ø 5/8" X 2" HEX BOLTS | USED IN SPLICE TUBES |
| B | 8 | ø 5/8" FLAT WASHER, HARDENED, TYPE A, PLAIN WIDE | FOR SPLICE TUBES, |
| C | 7 | ø 3/4" X 6" CARRIAGE BOLT, & NUT | TERM. CONN, & CONN. PLATE TO RAIL |
| D | 1 | ø 3/4" X 2" CARRIAGE BOLT, & NUT | DEFLECTOR PLATE TO CONN. PLATE |
| E | 19 | ø 5/8" X 1'-6" GUARDRAIL POST BOLT, F.W. & NUT | THRIE BEAM, TO OFFSET BLOCK, & 6x8" WOOD POST |
| F | 32 | ø 5/8" X 1 1/4" BUTTON HEAD SPLICE BOLT, RECESSED NUT & F.W. | FASTEN PANEL COMPONENTS TOGETHER, (THRIE, TERMINAL CONNECTOR, TRANSITION SECTION) |
| G | 19 | 3/16" PLATE WASHER @ 1 3/4" X 3" | USED IN PANEL VALLEY, W/ 18" BOLT |
| H | 16 | ø 3/4" X 6" SLOTTED ROUND HEAD BOLT, FL. WASHER, & LOCK NUT | FASTEN 4X4 & 4X8 RAIL TO RAIL POST 1~4 |

## BILL OF MATERIAL (621.72) PER EACH CORNER

| | QTY | PART # | DESCRIPTION | ASTM DESIGNATION |
|---|---|---|---|---|
| | 1 | 5143.90056 | THRIE BEAM TERMINAL CONNECTION (10 Ga) | AASHTO M180 |
| | 1 | 6029.01133 | THRIE BEAM TRANSITION @ 7'-3 1/2" (10 Ga) | AASHTO M180 |
| | 1 | 0033.90349 | 3/8" CONNECTION PLATE | 709 Gr.36 |
| | 2 | 5029.00016 | 12' 6" THRIE BEAM (12Ga) | ASHTO M180 |
| | 1 | 0033.90058 | W6X25 POST @ 8'-0" (POST 1) | 572 Gr. 50 |
| | 1 | 0033.90059 | W6X25 POST @ 8'-0" (POST 2) | 572 Gr. 50 |
| | 1 | 0033.90060 | W6X25 POST @ 8'-0" (POST 3) | 572 Gr. 50 |
| | 1 | 0033.90061 | W6X25 POST @ 8'-0" (POST 4) | 572 Gr. 50 |
| | 1 | 0033.90350 | DEFLECTOR PLATE (APPROACH / RIGI | 36 |
| | 1 | 0033.90351 | DEFLECTOR PLATE (TRAILING / LEFT) | A36 |
| | 1 | 0033.91146 | 8" X 4" X 5/16" RAIL @ 9'-3 1/2" | A500 Gr. B |
| | 1 | 0033.91145 | 4" X 4" X 1/4" RAIL @ 9'-3 1/2" | A500 Gr. B |
| | 1 | 0033.90056 | 8" X 4" X 3/16" END CAP | A36 |
| | 1 | 0033.90057 | 4" X 4" X 3/16" END CAP | A36 |
| | 1 | 0033.90352 | 3" x 3" x 5/16" EXP. SPLICE TUBE @ 1' 11 3/4" | A500 Gr. B |
| | 1 | 0033.90353 | 7" x 3" x 3/8" EXP. SPLICE TUBE @ 1' 11 3/4" | A500 Gr. B |
| | 8 | 0033.90053 | ø 3/4" SCH. 40 PIPE @ 1/2" | A53 |
| A | 8 | 0080.05045 | ø 5/8" X 2" HEX BOLTS | A307 |
| B | 8 | 0080.15910 | ø 5/8" FLAT WASHER, HARDENED, TYPE A, PLAIN WIDE | A307 |
| C | 7 | 0080.06300 | ø 3/4" X 6" CARRIAGE BOLT, & NUT | A307 |
| D | 1 | 0080.06081 | ø 3/4" X 2" CARRIAGE BOLT, & NUT | A307 |
| E | 19 | T.B.D. | ø 5/8" X 1'-6" GUARDRAIL POST BOLT, F.W. & NUT | A307 |
| F | 32 | T.B.D. | ø 5/8" X 1 1/4" BUTTON HEAD SPLICE BOLT, RECESSED NUT & F.W. | A307 |
| G | 19 | 0080.15913 | 3/16" PLATE WASHER @ 1 3/4" X 3" | A709 |
| H | 16 | 0080.06290 | ø 3/4" X 6" SLOTTED, ROUND HEAD BOLT, F.W., & LOCKNUT | A449, F436, & A563 |
| | 8 | 0009.00070 | 6 X 8" WOOD POST @ 7'-0" (POST 5~12) | WOOD |
| | 1 | 0009.00071 | 6 X 8" WOOD POST @ 7'-0" (POST 13) | WOOD |
| | 1 | 0009.00072 | 6 X 8" WOOD POST @ 7'-0" (POST 14) | WOOD |
| | 8 | 0009.00180 | 6 X 8" WOOD BLOCKOUTS @ 1'-6" (FOR POST 5~12) | WOOD |
| | 8 | 0009.00123 | 6 X 8" WOOD BLOCKOUTS @ 1'-6" (FOR POST 13) | WOOD |
| | 1 | 0009.00122 | 6 X 8" WOOD BLOCKOUTS @ 1'-2" (FOR POST 14) | WOOD |

Vermont Agency of Transportation
RECEIVED
CK'D BY D. PETERSON OK'D BY C. CARLSON
June 1, 2015
RESUBMIT YES Rejected
BY C. CARLSON DATE 06/12/2015

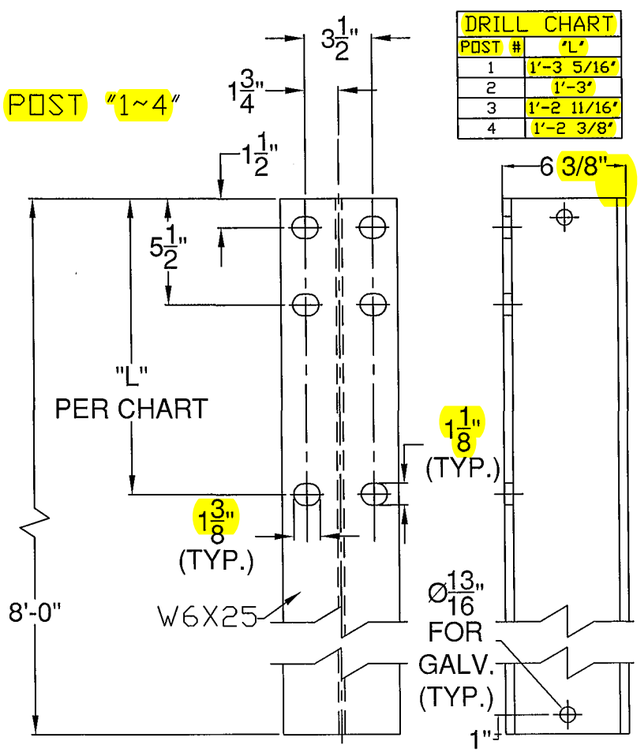


| DRILL CHART | |
|---|---|
| POST # | "L" |
| 1 | 1'-3 5/16" |
| 2 | 1'-3" |
| 3 | 1'-2 11/16" |
| 4 | 1'-2 3/8" |

NOTE: THE EAST END OF THE BRIDGE HAS A 575' RADIUS. THIS CAN BE ACCOMPLISHED WITH THE PLAY IN THE APPROACH RAIL SPLICES AND THE FLEXIBILITY OF THE THRIE BEAM IN THE FIELD.

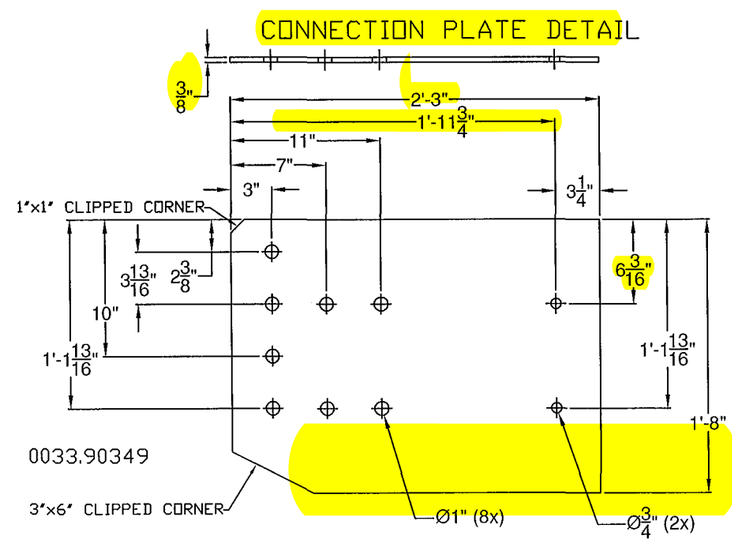


ITEM #: 621.72

STRUCTURAL STEEL TO COMPLY W/ ASTM A6

GALAVANIZING TO BE PER ASTM A123, UNLESS OTHERWISE SPECIFIED.

TOLERANCE UNLESS OTHERWISE NOTED:
HOLES - ± 1/32"
FRACTIONS - ± 1/16"
ANGLES - ± 1/2°

SHEET 1 OF 3

# 2 RAIL BRIDGE RAIL TO GUARDRAIL TRANSITION

PROJECT: ANDOVER BHF 016-1 (29) VT RTE11, RURAL MINOR ARTERIAL, BRIDGE NO. 41
TOWN OF ANDOVER, WINDSOR COUNTY, VERMONT

| R | NO. | DATE | DESCRIPTION | BY | R | NO. | DATE | DESCRIPTION | BY |
|---|---|---|---|---|---|---|---|---|---|
| E | 1 | 5/28/15 | REVISED PER 5/18/15 MARK-UP | E.P. | E | | | | |
| V | 2 | 5/29/15 | REVISED PER 5/29/15 EMAIL | E.P. | V | | | | |


ELDERLEE, INC.
OAKS CORNERS, NEW YORK 14518
email: dlong@elderlee.com / epeek@elderlee.com
Tel: 315-789-6670 Fax: 315-789-6615


CERTIFIED FABRICATOR
ORTHOGRAPHIC PROJECTION

| | | |
|---|---|---|
| DRAWN | E.P. | 5/14/15 |
| CHECKED | D.L. | 5/14/15 |
| APPROVED | . | . |
| SCALE | SCHEMATIC | |
| DRAWING NO. | F.R.L. ANDOVER | |

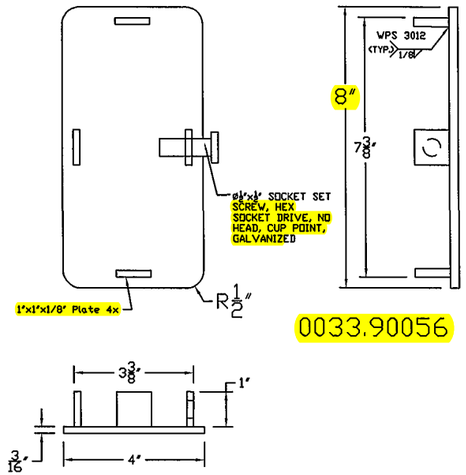


0033.90056

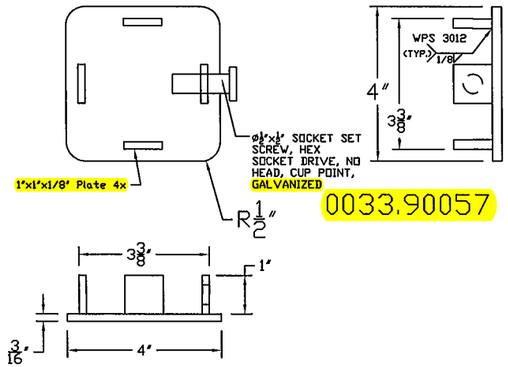


0033.90057

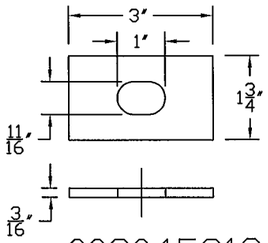


0080.15913
PLATE WASHER

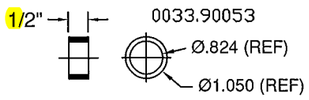


0033.90053
3/4" SCH. 40 PIPE SPACER

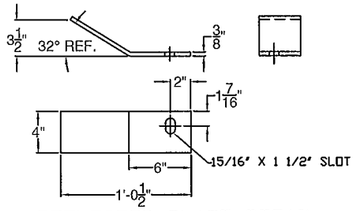


DEFLECTOR PLATE DETAIL
0033.90350 - APPROACH SHOWN
0033.90351 - TRAILING-OPPOSITE BEND

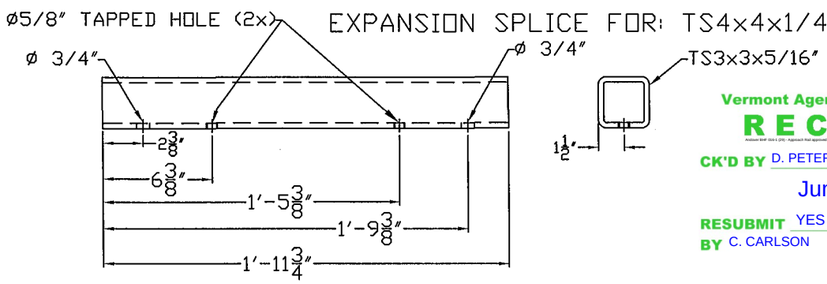


Vermont Agency of Transportation
RECEIVED
CK'D BY D. PETERSON OK'D BY C. CARLSON
June 1, 2015
RESUBMIT YES Rejected
BY C. CARLSON DATE 06/12/2015

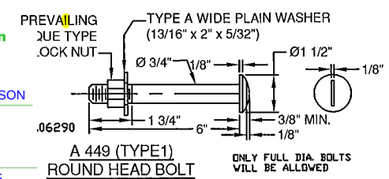


A 449 (TYPE1)
ROUND HEAD BOLT
ONLY FULL DIA. BOLTS WILL BE ALLOWED

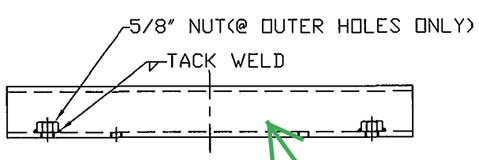


0033.90352

hole and slot sizes

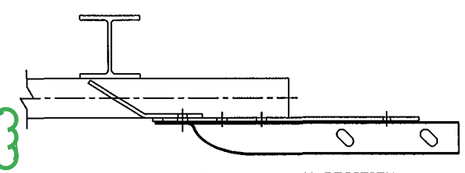

TOP VIEW OF DEFLECTOR IN POSITION
(TOP RAIL REMOVED FOR CLARITY)

EXPANSION SPLICE FOR: TS8x4x5/16"

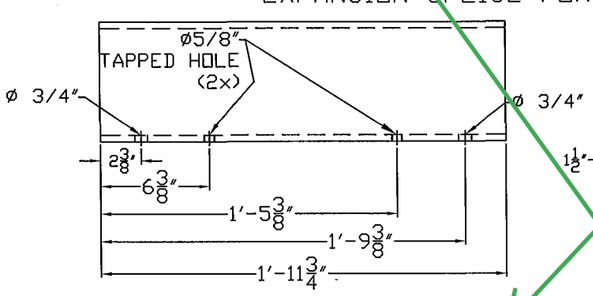


Splice is angled down off the bridge. These bars may need to be bent to fit.

0033.90353

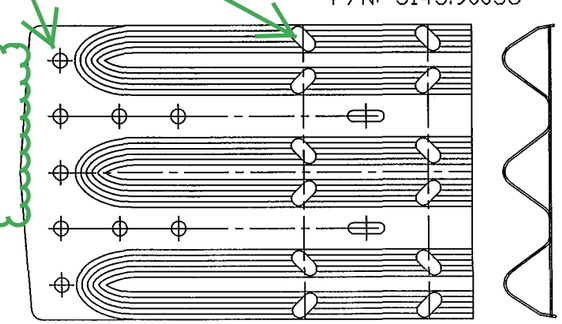

P/N: 5143.90056

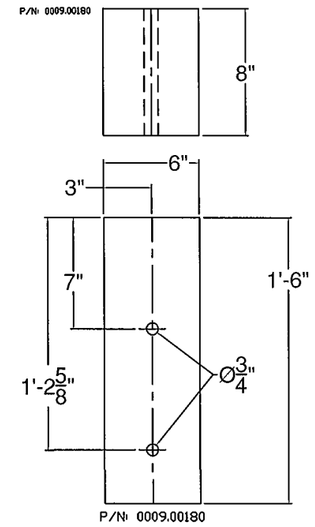


P/N: 0009.00180
WOOD BLOCKOUT FOR POST 5~12

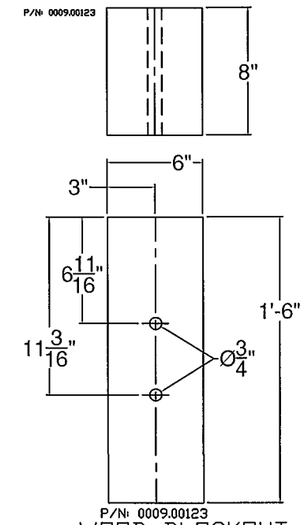


P/N: 0009.00123
WOOD BLOCKOUT FOR POST 13

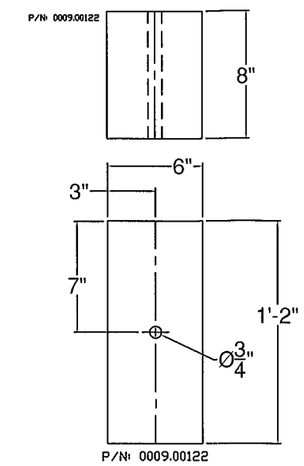


P/N: 0009.00122
WOOD BLOCKOUT FOR POST 14

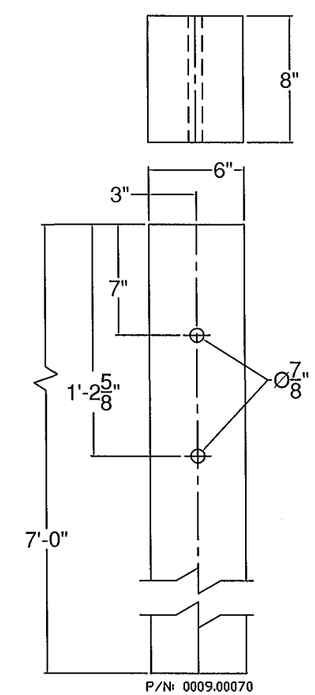


P/N: 0009.00070
WOOD POST 5~12

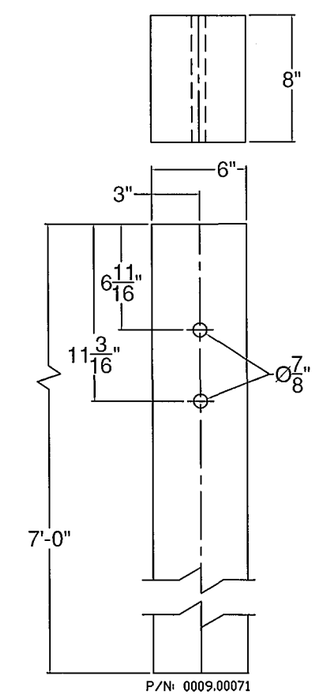


P/N: 0009.00071
WOOD POST 13

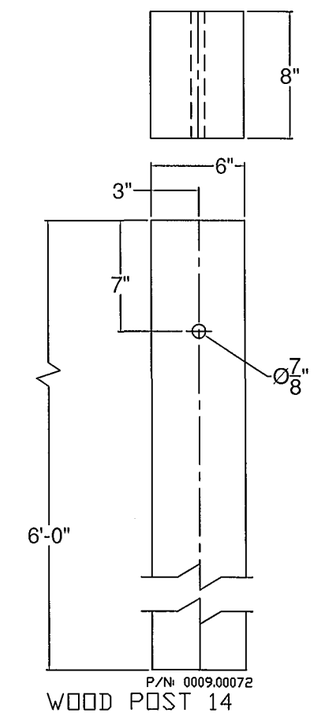


P/N: 0009.00072
WOOD POST 14

ITEM #: 621.72

SHEET 2 OF 3

APPROVED BY:

# 2 RAIL BRIDGE RAIL TO GUARDRAIL TRANSITION

PROJECT: ANDOVER BHF 016-1 (29) VT RTE11, RURAL MINOR ARTERIAL, BRIDGE NO. 41
TOWN OF ANDOVER, WINDSOR COUNTY, VERMONT

| R | NO. | DATE | DESCRIPTION | BY | R | NO. | DATE | DESCRIPTION | BY |
|---|---|---|---|---|---|---|---|---|---|
| E | 1 | 5/28/15 | REVISED PER 5/18/15 MARK-UP | E.P. | E | | | | |
| V | 2 | 5/29/15 | REVISED PER 5/29/15 EMAIL | E.P. | V | | | | |


ELDERLEE, INC.
OAKS CORNERS, NEW YORK 14518
E-Mail: dlong@elderlee.com
Tel: 315-789-6670 Fax: 315-789-6615


CERTIFIED FABRICATOR

| | | |
|---|---|---|
| DRAWN | E.P. | 5/14/15 |
| CHECKED | D.L. | 5/14/15 |
| APPROVED | . | . |
| SCALE | SCHEMATIC | |
| DRAWING NO. | F.R.L. ANDOVER | |

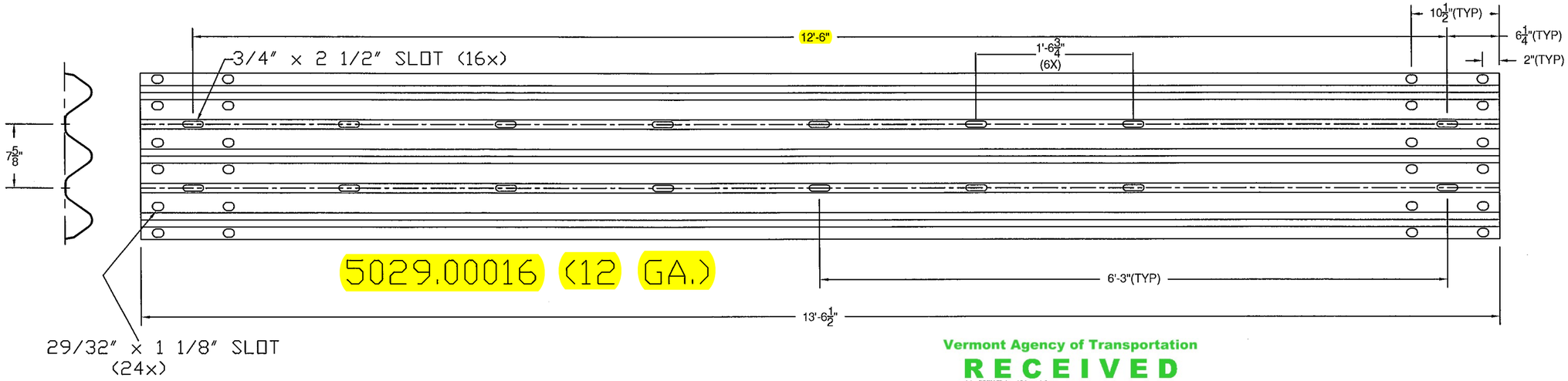


NOTES
1. ALL WORK AND MATERIALS SHALL CONFORM TO SECTION 525.
2. PRIOR TO GALVANIZING THE ASSEMBLED POST, GRIND ALL EDGES TO A MINIMUM RADIUS OF 1/16".
3. ALL POSTS SHALL BE SET NORMAL TO GRADE.
4. SECTIONS OF RAIL TUBE SHALL BE ATTACHED TO A MINIMUM OF TWO BRIDGE RAIL POSTS AND PREFERABLY TO AT LEAST FOUR POSTS.
5. RAIL TUBE EXPANSION JOINTS SHALL PROVIDED IN ANY RAIL BAY SPANNING THE END OF AN INTEGRAL ABUTMENT BRIDGE AND AT ALL SUPERSTRUCTURE EXPANSION JOINTS. EXPANSION JOINT WIDTH SHALL BE 4" AT 45°F AND WILL BE ADJUSTED IN THE FIELD BY THE ENGINEER FOR OTHER TEMPERATURES.
6. HOLES IN RAILS FOR RAIL TUBE ATTACHMENT WILL BE FIELD-DRILLED. HOLES SHALL BE COATED WITH AN APPROVED ZINC-RICH PAINT PRIOR TO INSTALLATION.
7. RAIL POST ANCHORING NUTS SHALL BE TIGHTENED TO A SNUG FIT AND GIVEN AN ADDITIONAL ONE-EIGHTH TURN.
8. RAIL TUBES SHALL BE ATTACHED USING 3/4" FULL DIAMETER BODY ASTM A 449 (TYPE I) ROUND HEAD BOLTS INSERTED THROUGH THE FACE OF THE TUBE. HOLES IN POSTS SHALL BE 1/16" LARGER THAN THE BOLT SIZE:
9. ANY BENDING OF RAIL SHALL BE DONE AT A FABRICATION PLANT ACCORDING TO A PROCEDURE PROVIDED BY THE FABRICATOR.
10. THE MINIMUM DISTANCE FROM THE POST TO AN EXPANSION JOINT SHALL BE DETERMINED BY THE MINIMUM EDGE DISTANCE OF 5" FROM ANY ANCHOR STUD TO THE END OF THE SLAB, OR TO THE EXPANSION JOINT RECESS POUR, IF ONE IS USED.
11. SEE STANDARD DRAWING G-I FOR DETAILS OF DELINEATORS. A DELINEATOR SHALL BE INSTALLED AT 30 FOOT SPACING OR THE NEAREST POST. WHITE IS TO BE INSTALLED ON THE DRIVER'S RIGHT. FOR ONE WAY BRIDGES, YELLOW IS TO BE INSTALLED ON THE DRIVER'S LEFT. PAYMENT SHALL BE INCIDENTAL TO OTHER ITEMS.
12. THIS RAILING MEETS THE REQUIREMENTS FOR A TL-4 SERVICE LEVEL.

Vermont Agency of Transportation
RECEIVED
Andover BHF 016-1 (29) - Approach Rail approved.pdf
CK'D BY D. Peterson OK'D BY C. Carlson
June 1, 2015
RESUBMIT No Approved
BY C. Carlson DATE 06/12/2015

0033.91146

TOP RAIL

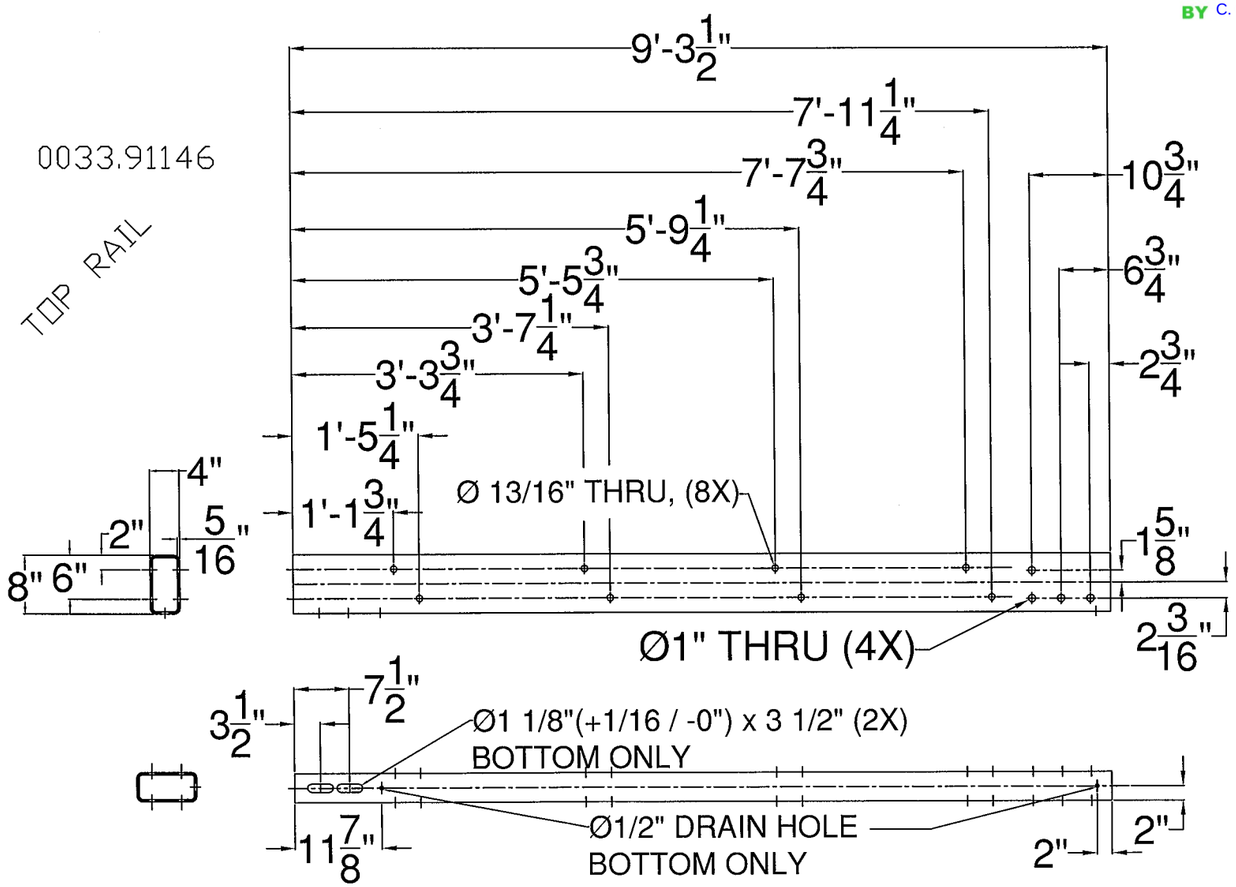


0033.91145

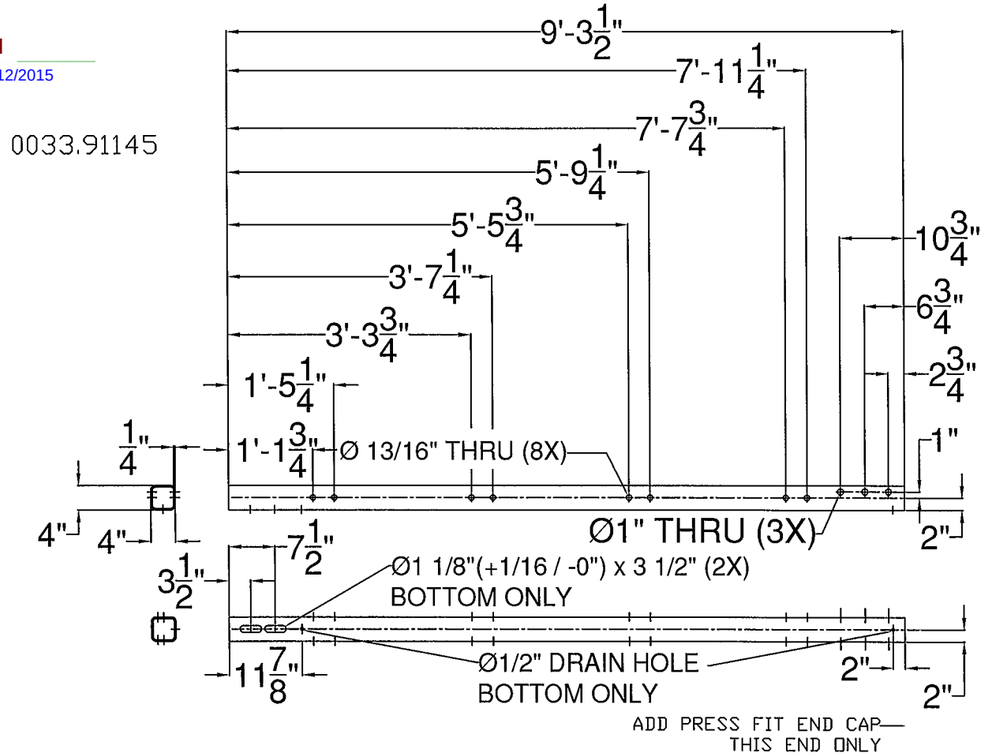


ITEM #: 621.72

SHEET 3 OF 3

APPROVED BY:

## 2 RAIL BRIDGE RAIL TO GUARDRAIL TRANSITION

PROJECT: ANDOVER BHF 016-1 (29) VT RTE11, RURAL MINOR ARTERIAL, BRIDGE NO. 41
TOWN OF ANDOVER, WINDSOR COUNTY, VERMONT

| R | NO. | DATE | DESCRIPTION | BY | R | NO. | DATE | DESCRIPTION | BY |
|---|---|---|---|---|---|---|---|---|---|
| E | 1 | 5/28/15 | REVISED PER 5/18/15 MARK-UP | E.P. | E | | | | |
| V | 2 | 5/29/15 | REVISED PER 5/29/15 EMAIL | E.P. | V | | | | |

ELDERLEE, INC.
OAKS CORNERS, NEW YORK 14518
E-Mail: dlong@elderlee.com
Tel: 315-789-6670 Fax: 315-789-6615

AISC CERTIFIED FABRICATOR

| | | |
|---|---|---|
| DRAWN | E.P. | 5/14/15 |
| CHECKED | D.L. | 5/14/15 |
| APPROVED | . | . |
| SCALE | SCHEMATIC | |
| DRAWING NO. | F.R.L. ANDOVER | |

## WELDING PROCEDURE SPECIFICATION

PQR ELDERLEE #3

| | |
|---|---|
| Material Specification | ASTM-A500-A53-GRADE B TO A36 |
| Welding Process | FCAW-G |
| Manual or Machine | SEMAUTOMATIC |
| Position of Welding | 1G |
| Filler Metal Specification | A5.29 |
| Filler Metal Classification | E81T1-NI1C-JH4 |
| Flux | N/A |
| Shielding Gas | CO 2 Dew Point -40DEG F FLOW RATE 50 CFH |
| Single or Multiple Pass | SINGLE |
| Single or Multiple Arc | SINGLE |
| Welding Current | DC |
| Polarity | REVERSE ELECTRODE POSITIVE |
| Welding Progression | STRINGER |
| Root Treatment | PER D1.5 |
| Preheat and Interpass Temperature | PER. D1.5 |
| Postheat Temperature | NONE |
| Heat Input | Min Max |

### WELDING PROCEDURE

| Pass no. | Electrode size | Welding Current Amperes | Welding Current Volts | Travel speed | Joint detail |
|---|---|---|---|---|---|
| 1 | 1/16 | 310 | 25 | 11 | 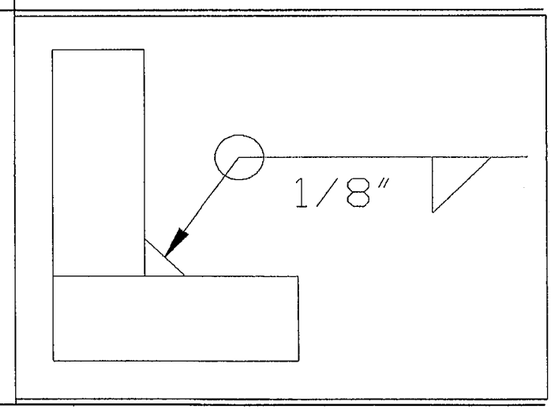  |
| Variable | LIMITS | 341 TO 269 | 27 TO 23 | 12 TO 10 | |

This procedure may vary due to fabrication sequence, fit-up, pass size, etc., within the limitation of variables given in Section 5.

| | | | |
|---|---|---|---|
| Procedure No. | 3012 | Contractor | Elderlee, Inc. |
| Revision No. | | Authorized By | RANDY SCOTT |
| | | Date | 3/20/2014 |

Vermont Agency of Transportation

RECEIVED

Andover BHF 016-1 (29) - Approach Rail resubmit.pdf

CK'D BY R. FOSTER OK'D BY D. PETERSON

June 1, 2015

RESUBMIT NO Approved

BY C. CARLSON DATE 06/12/2015