LETTER OF TRANSMITTAL

TRANSMITTAL # 2

J.P. CARRARA & SONS, INC.
2464 CASE ST
MIDDLEBURY, VT 05753
T: 802.388.6363
F: 802.388.9010

DATE:	6.4.15	**JOB #**	23465-015
ATTN:	Charlie Ezequelle/Renaud Bros, Inc		
RE:	Andover, VT, BHR 016-1 (29)		

We are sending you:

Shop Drawings	x	Change Order		Copy of Letter	
Plans		Attached	x	Separate Cover	
Prints		Specifications		(Via)	
Samples		Other:			

Copies	*Date*	*Qty.*	*Description*
1	6.4.15	1	Andover Precast Concrete Submittal Revision 1

These are transmitted as checked below:

For approval	x	Approved as submitted		Submit	x
For your use		Approved as noted		Resubmit	
As requested		Returned /Notation		Return	
For review		Loaned Prints/Returned		Other	

Remarks:

Please see attached Andover shop drawings/Rev 1, camber calculations, revised lifting calculations, and post tensioning jack certifications.

Copy to:

Signed:

Joe Gallese-PM

If enclosures are not as noted, please notify us immediately.

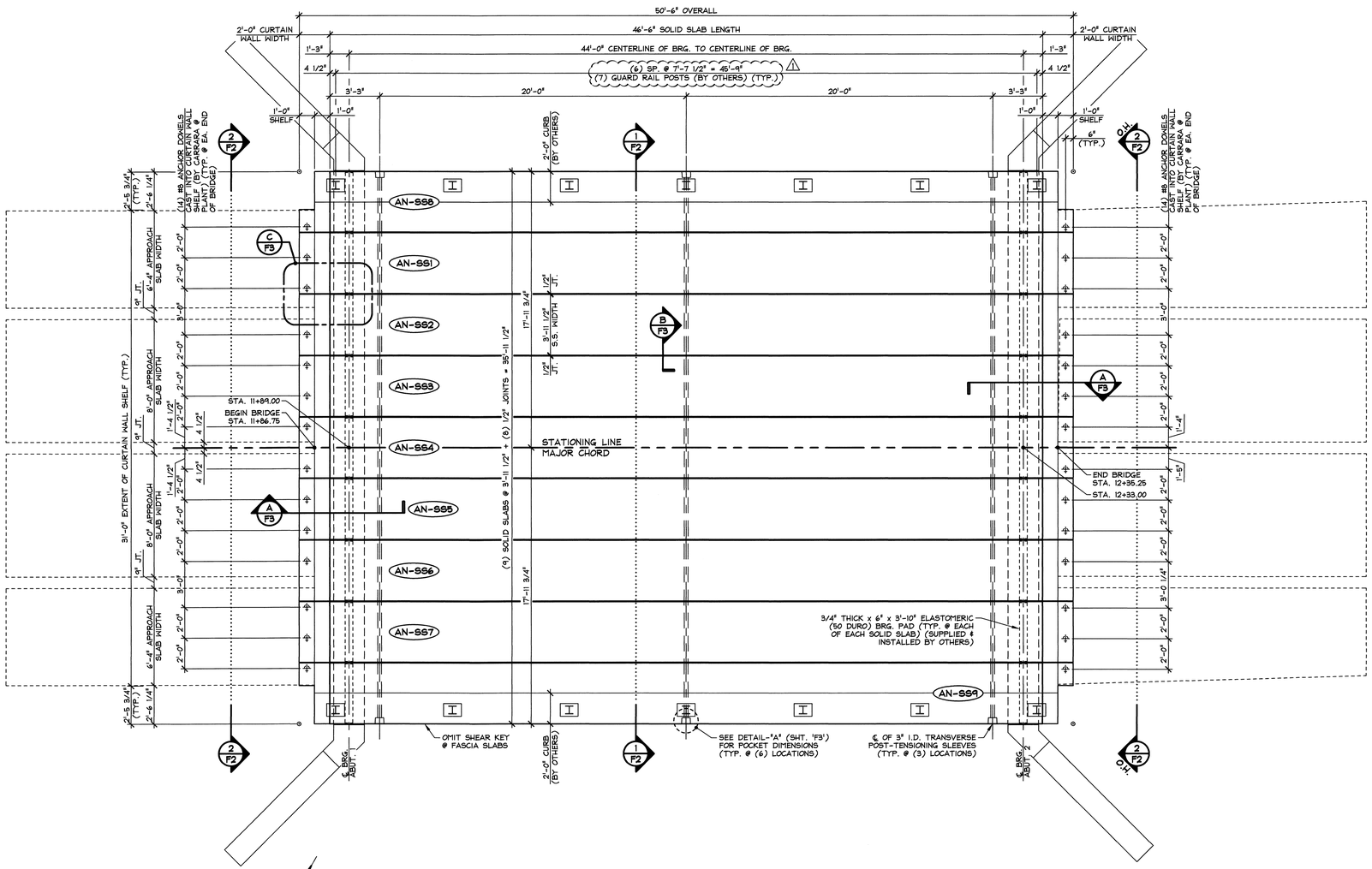

1/F1 PRESTRESSED SOLID SLAB LAYOUT WITH PRECAST CURTAIN WALLS

1/4" = 1'-0"

VOIDED SLAB GENERAL NOTES

1. MIN. CONCRETE STRENGTH AT 28 DAYS SHALL BE 6,000 PSI.
2. MIN. CONCRETE STRENGTH AT STRESS TRANSFER SHALL BE 4,000 PSI.
3. REINFORCING STEEL SHALL BE GR-60, ASTM A-615 (AASHTO M31) LEVEL 1 (EPOXY COATED).
4. PRESTRESSING STRANDS SHALL CONFORM TO ASTM A-416 (AASHTO M203) AND SHALL CONSIST OF 0.60"ϕ x 270 KSI 7-WIRE LOW RELAXATION STRANDS.
5. PRESTRESSING STRANDS SHALL EACH BE PULLED TO HAVE A NET TENSION OF 44.0 K AFTER ACCOUNTING FOR CHUCK SLIPPAGE. TENSION SHALL BE VERIFIED BY MEASURING STRAND ELONGATION. (SEE EXAMPLE ELONGATION CALCULATION AND TENSIONING PROCEDURE, THIS SHEET.)
6. ENDS OF PRESTRESSING STRANDS SHALL BE CUT FLUSH WITH END OF SOLID SLABS USING AN ABRASIVE WHEEL (UNLESS NOTED OTHERWISE) AND TWO PART EPOXY PAINTED.
7. ALL EXPOSED CORNERS SHALL BE CHAMFERED 3/4".
8. THE TOP OF SLABS SHALL RECEIVE A SMOOTH FLOAT FINISH (UNLESS NOTED OTHERWISE).
9. SHEAR KEY SURFACES SHALL BE SAND BLASTED CLEAN.
10. SLABS SHALL BE HANDLED AND ERECTED USING THE LIFTING LOOPS ONLY. RIGGING SHALL BE CONFIGURED SUCH THAT EQUAL FORCES ARE APPLIED TO EACH OF THE TWO LIFTING LOOPS AT EACH END OF THE SLAB. THE MINIMUM SLING ANGLE FROM THE HORIZONTAL SHALL BE 60°. **THE PINS OF THE SHACKLES SHALL BE PLACED THROUGH THE LIFTING LOOPS. SEE DETAIL, SHEET 'F3'.** SLABS SHALL BE STORED AND TRANSPORTED WITH TIMBER SUPPORTS WITHIN 2'-0" OF THE SLAB ENDS, UNLESS APPROVED BY J.P. CARRARA & SONS, INC.

    ONCE SLABS HAVE BEEN ERECTED, CUT LIFTING LOOPS AT RECESS, EPOXY PAINT AND PATCH AS REQUIRED (BY OTHERS).
11. MATERIAL SPECIFICATION AND MIX DESIGN SHALL CONFORM TO VERMONT SPEC. P510.02 AND P510.05 RESPECTIVELY.

    DESIGN MIX: J.P.C. BRIDGE MIX #425M (NO DCI)
12. QUALITY CONTROL PROCEDURES ARE IN ACCORDANCE WITH PCI REQUIREMENTS. J.P. CARRARA & SONS, INC. IS A PCI CERTIFIED PLANT.
13. CURING METHOD: AS SOON AS THE TOP OF SLAB IS FINISHED, A COVER OF INSULATED POLY. THE DESIRED CURING TEMPERATURE RANGE SHALL NOT DROP BELOW 70°F. THE TEMPERATURE SHALL BE RECORDED BY AUTOMATIC SENSOR INSTRUMENTS ON GRAPH CHARTS, SPACED NOT MORE THAN 100' APART AND WILL CONTINUE UNTIL RELEASE STRENGTH IS ACHIEVED. EACH CHART SHALL BE MARKED WITH THE CASTING DATED AND LOCATION OF THE RECORDER. IF NECESSARY TO MAINTAIN CASTING BED TEMPERATURE PRIOR TO CONCRETE PLACEMENT OR TO ACCELERATE EARLY AGE STRENGTH GAIN, EXTERNAL RADIANT HEAT MAY BE EMPLOYED VIA HOT WATER DUCTS BENEATH AND WITHIN THE PERIPHERY OF THE CASTING BED. MAXIMUM CURING TEMPERATURE SHALL NOT EXCEED PCI SPECIFIED LIMITS.
14. TRANSVERSE POST-TENSIONING SEQUENCE:
    A. ERECT SOLID SLABS, AND POST-TENSION TENDONS TO APPROXIMATELY 3,000 LBS.
    B. GROUT SHEAR KEYS (BY OTHERS).
    C. ONCE SHEAR KEY GROUT HAS ATTAINED A MINIMUM COMPRESSIVE STRENGTH OF 1,500 PSI; POST-TENSION TENDONS TO 44,000 LBS.
    D. EXCESS TENDON LENGTH SHALL BE CUT USING AN ABRASIVE WHEEL.
    E. APPLY TWO PART EPOXY TO EXPOSED TENDON AND CHUCK (BY OTHERS).
15. OWNER SHALL PROVIDE APPROPRIATE WATERPROOFING TO GROUTED SHEAR KEYS. J.P. CARRARA & SONS, INC. SHALL NOT BE HELD LIABLE FOR PROBLEMS ASSOCIATED WITH MOISTURE INFILTRATING GROUTED SHEAR KEYS.

EXAMPLE PRESTRESSING STRAND ELONGATION CALC. AND TENSIONING

(NOT TO BE USED FOR CONSTRUCTION)

SIZE & GRADE: 0.60"ϕ x 270 KSI
AREA: 0.217 IN^2
TENSION: 44,000 LB. EACH STRAND
GRIP-TO-GRIP: 189'-0" = 189.00'
Es = 28,600,000 PSI (ASSUMED FOR THESE CALCULATIONS; VALUE TO BE OBTAINED FOR STRAND SPOOL ACTUALLY USED)

EXAMPLE:

$$\Delta = \frac{PL}{AE} = \frac{(44{,}000 - 3{,}000) \times 189.00 \times 12}{0.217 \times 28{,}600{,}000} = 14.983''$$

THEREFORE: (TOLERANCES ± 5%)
△ UPPER LIMIT = 1.05 x 14.983" = 15.73" = 15 3/4"
△ LOWER LIMIT = 0.95 x 14.983" = 14.23" = 14 1/4"

EXTRA FORCE REQUIRED TO COMPENSATE FOR 1/2" CHUCK SLIPPAGE:

$$\Delta P = \frac{0.5 \times 41{,}000}{14.983} = 1{,}368 \text{ LBS.}$$

TOTAL TENSIONING FORCE = 44,000 + 1,368 = 45,368 LBS.

STRAND TENSIONING PROCEDURE:

1. PULL EACH STRAND INITIALLY TO 3,000# LBS. AND MARK STRAND.
2. THEN PULL EACH STRAND TO A TOTAL TENSION OF 45,368# LBS. AND MEASURE ELONGATION AFTER SEATING. IT MUST BE BETWEEN 14 1/4"# AND 15 3/4"#.

    # NOTE: FORCES READ ON STRESSING JACK GAUGES MUST BE MADE TO CORRESPOND TO ABOVE VALUES BASED ON CALIBRATION DATA FOR SPECIFIC JACK USED.

DESIGN LIVE LOAD: HL-93

SUBMITTED
6.4.15
J. P. CARRARA & SONS, INC.
MIDDLEBURY, VT 05753

△1 6-1-15 REVISED AS NOTED

Approval Stamp: For Design & Fabrication

STATE OF VERMONT · GREG O. GOLDERWOOD · NO. 9311 · LICENSED · PROFESSIONAL ENGINEER

DATE 6/4/15

J.P. CARRARA & SONS INC.
Precast & Prestress Manufacturer
2464 CASE STR., MIDDLEBURY, VERMONT 05753 Phone:(802)388-6361 Fax:(802)388-9010

RENAUD BROS, INC.
CONTRACTOR
VERNON, VERMONT

STATE OF VERMONT AGENCY OF TRANSPORTATION
COUNTY OF WINDSOR

TOWN OF ANDOVER
VT RTE 11, RURAL MINOR ARTERIAL
BRIDGE NO.: 41 PROJECT NO.: BHF 016-1(29)

PRESTRESSED SOLID SLAB LAYOUT

DATE: MAY 6, 2015	
SCALE: NOTED	
CHKD: J.C.	DFTM: B.L.
JOB NO: 23465-015	
DWG. NO: F1	

F:\VT-Bridges\23465-15 Andover 41\23465-F1.dwg, 6/3/2015 1:40:12 PM

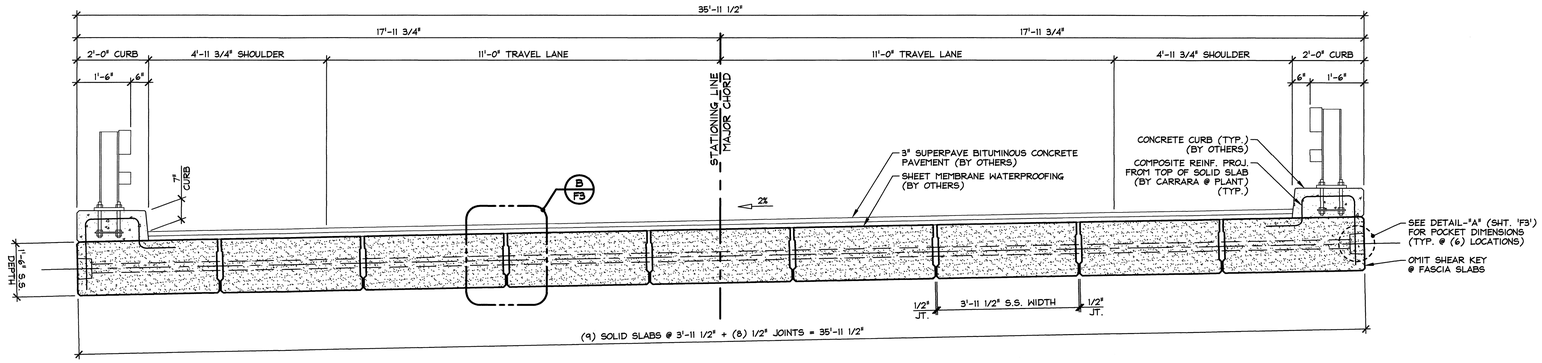

1 / F2 TRANSVERSE SOLID SLAB SECTION

1/2" = 1'-0"

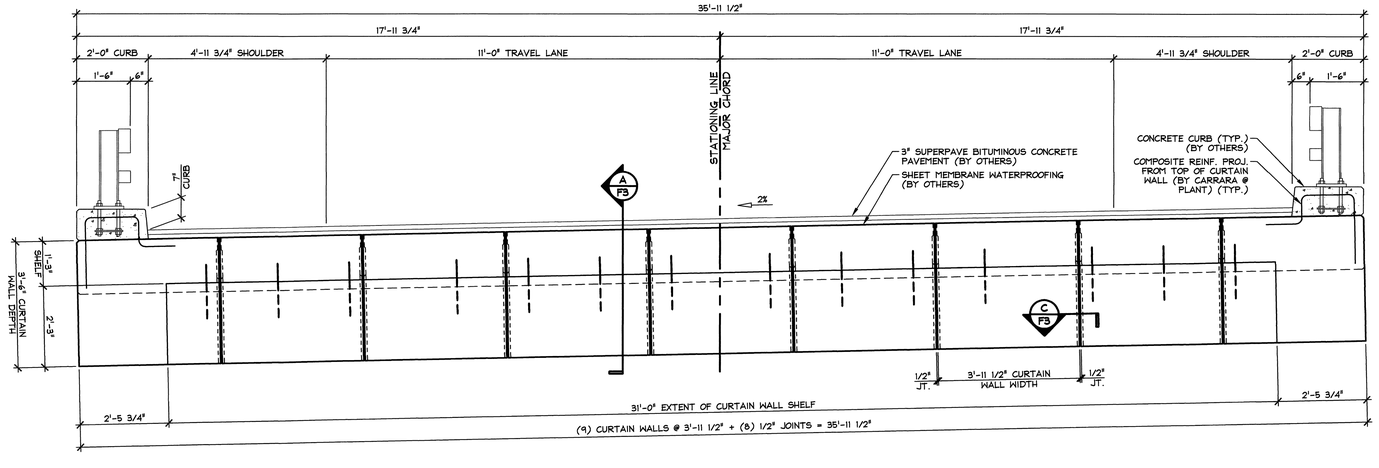

2 / F2 CURTAIN WALL ELEVATION

1/2" = 1'-0"

SUBMITTED
6.4.15
J. P. CARRARA & SONS, INC.
MIDDLEBURY, VT 05753

Approval Stamp: For Design & Fabrication

STATE OF VERMONT
ERIC J. FONDERWOOD
No. 11111
LICENSED
PROFESSIONAL ENGINEER

DATE 6/4/15

J.P. CARRARA & SONS INC.
Precast & Prestress Manufacturer
2464 CASE STR., MIDDLEBURY, VERMONT 05753 Phone:(802)388-6361 Fax:(802)388-9010

RENAUD BROS, INC.
CONTRACTOR
VERNON, VERMONT

STATE OF VERMONT AGENCY OF TRANSPORTATION
COUNTY OF WINDSOR

TOWN OF ANDOVER
VT RTE 11, RURAL MINOR ARTERIAL
BRIDGE NO.: 41 PROJECT NO.: BHF 016-1(29)

TRANSVERSE SECTION & CURTAIN WALL ELEVATION

DATE:	MAY 6, 2015
SCALE:	NOTED
CHKD: J.C.	DFTM: B.L.
JOB NO:	23465-015
DWG. NO:	F2

F:\VT-Bridges\23465-15 Andover 41\23465-F2.dwg, 6/3/2015 1:42:13 PM

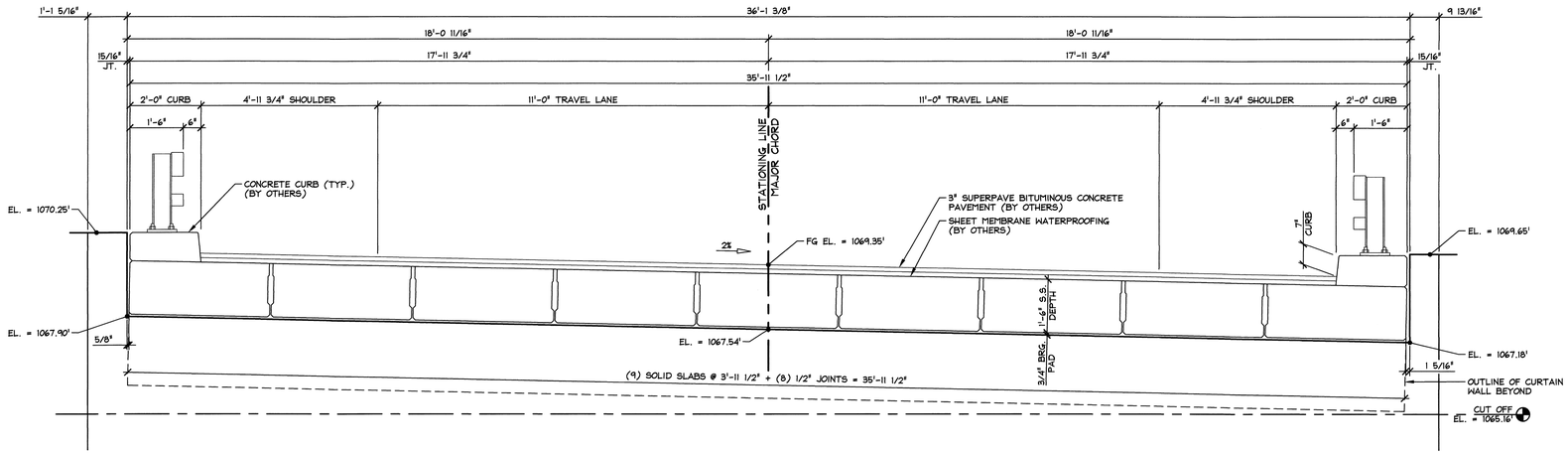

1 / F2.1 ABUTMENT NO. 1 PARTIAL ELEVATION

1/2" = 1'-0"

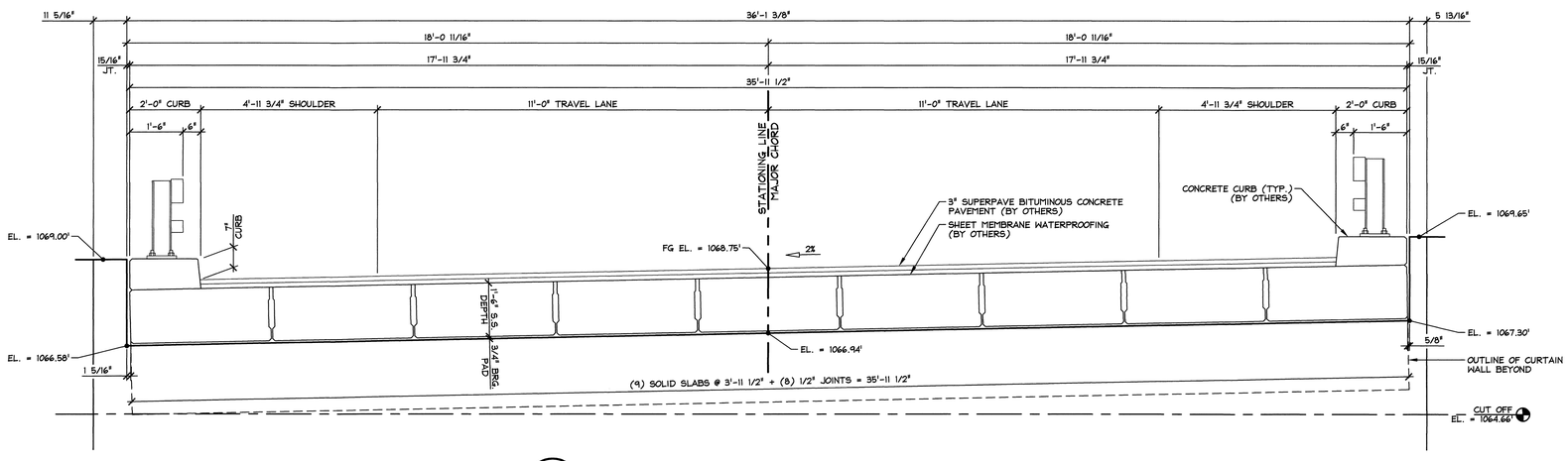

2 / F2.1 ABUTMENT NO. 2 PARTIAL ELEVATION

1/2" = 1'-0"

SUBMITTED
6.4.15
J. P. CARRARA & SONS, INC.
MIDDLEBURY, VT 05753

⚠ 6-1-15 GENERAL REVISIONS

Approval Stamp: For Design & Fabrication

STATE OF VERMONT — GALDERMOND — NO. 7117 — LICENSED — PROFESSIONAL ENGINEER

DATE 6/4/15

J.P. CARRARA & SONS INC.
Precast & Prestress Manufacturer
2464 CASE STR., MIDDLEBURY, VERMONT 05753 Phone:(802)388-6361 Fax:(802)388-9010

RENAUD BROS, INC.
CONTRACTOR
VERNON, VERMONT

STATE OF VERMONT AGENCY OF TRANSPORTATION
COUNTY OF WINDSOR

TOWN OF ANDOVER
VT RTE 11, RURAL MINOR ARTERIAL
BRIDGE NO.: 41 PROJECT NO.: BHF 016-1(29)

PARTIAL ABUTMENT ELEVATIONS

DATE:	MAY 6, 2015
SCALE:	NOTED
CHKD: J.C.	DFTM: B.L.
JOB NO:	23465-015
DWG. NO:	F2.1

F:\VT-Bridges\23465-15 Andover 41\23465-F2-1.dwg, 6/3/2015 1:43:47 PM

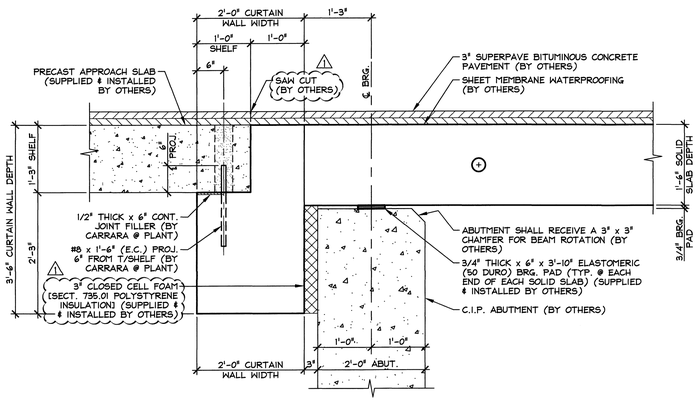

A F3 BEARING SECTION

SOLID SLAB PROJECTING REINFORCING AND CURTAIN WALL REINFORCING NOT SHOWN FOR CLARITY

3/4" = 1'-0"

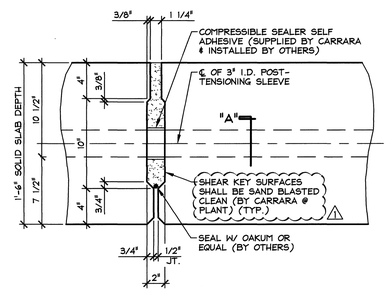

B F3 SOLID SLAB SHEAR KEY SECTION @ P.T. SLEEVE

1 1/2" = 1'-0"

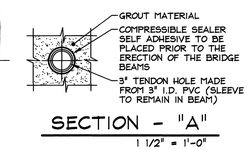

SECTION - "A"

1 1/2" = 1'-0"

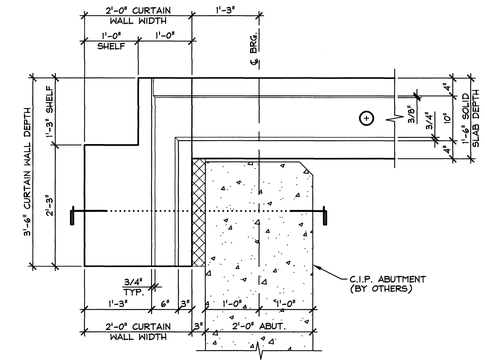

SHEAR KEY ELEVATION

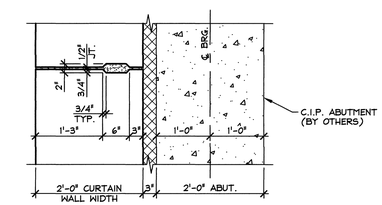

SHEAR KEY PLAN

C F3 CURTAIN WALL SHEAR KEY DETAILS

3/4" = 1'-0"

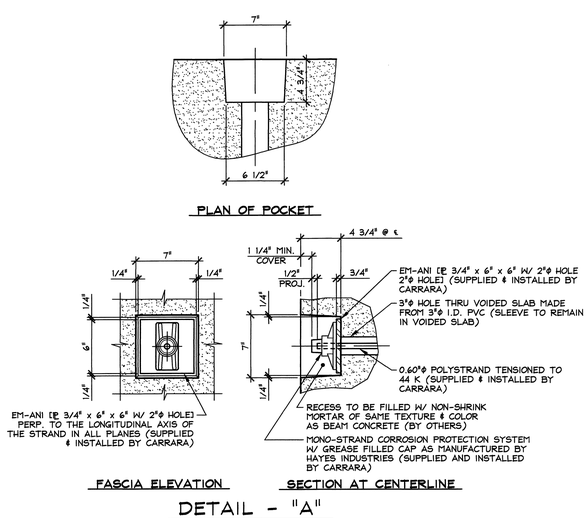

DETAIL - "A"

1 1/2" = 1'-0"

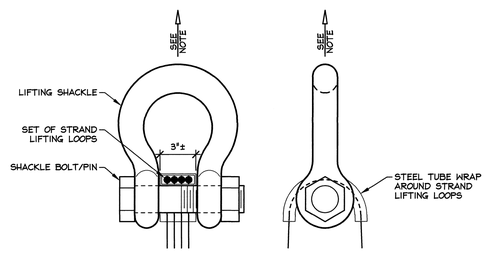

NOTE: SOLID SLABS SHALL BE HANDLED AND ERECTED USING THE LIFTING LOOPS ONLY. RIGGING SHALL BE CONFIGURED SUCH THAT EQUAL FORCES ARE APPLIED TO EACH SET OF LIFTING LOOPS AT EACH END OF THE SLAB. THE MINIMUM SLING ANGLE FROM THE HORIZONTAL SHALL BE 60°. SHACKLE BOLT/PIN SHALL BE PLACED UNDER LIFT LOOPS AS SHOWN. DESIGN AND CONFIGURATION OF RIGGING BY PURCHASER.

LIFTING SHACKLE DETAILS

N.T.S.

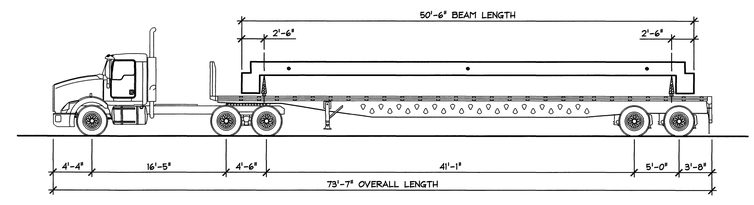

SHIPPING DETAIL

N.T.S.

SUBMITTED
6.4.15
J. P. CARRARA & SONS, INC.
MIDDLEBURY, VT 05753

△1 6-1-15 REVISED AS NOTED

Approval Stamp: For Design & Fabrication

STATE OF VERMONT ERIC R. GOLDENWOOD NO. 9411 LICENSED PROFESSIONAL ENGINEER

DATE 6/4/15

J.P. CARRARA & SONS INC.
Precast & Prestress Manufacturer
2464 CASE STR., MIDDLEBURY, VERMONT 05753 Phone:(802)388-6361 Fax:(802)388-9010

RENAUD BROS, INC.
CONTRACTOR
VERNON, VERMONT

STATE OF VERMONT AGENCY OF TRANSPORTATION
COUNTY OF WINDSOR

TOWN OF ANDOVER
VT RTE 11, RURAL MINOR ARTERIAL
BRIDGE NO.: 41 PROJECT NO.: BHF 016-1(29)

SUPERSTRUCTURE DETAILS

DATE:	MAY 6, 2015
SCALE:	NOTED
CHKD: J.C.	DFTM: B.L.
JOB NO:	23465-015
DWG. NO:	F3

F:\VT-Bridges\23465-15 Andover 41\23465-F3.dwg, 6/3/2015 1:45:02 PM

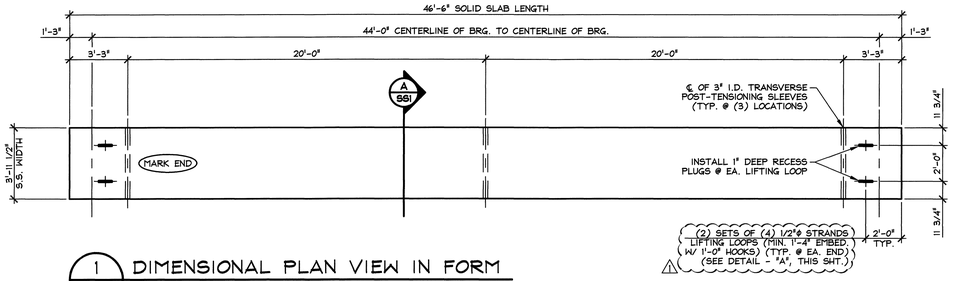

1 SS1 DIMENSIONAL PLAN VIEW IN FORM

1/4" = 1'-0"

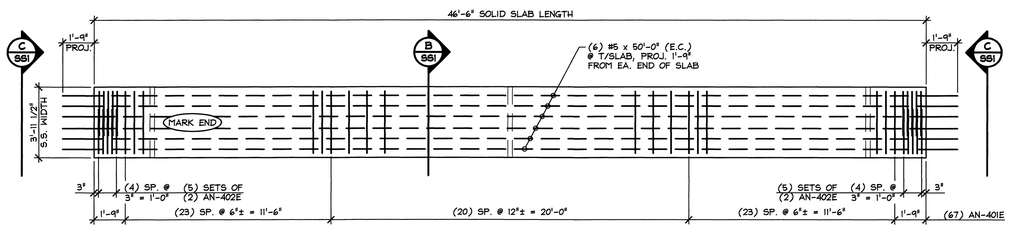

2 SS1 REINFORCING PLAN VIEW IN FORM

1/4" = 1'-0"

SHOP NOTE:
ADJUST REINFORCING AS REQUIRED TO CLEAR POST-TENSIONING SLEEVES.

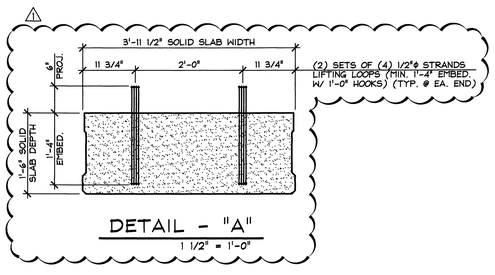

DETAIL - "A"

1 1/2" = 1'-0"

DETENSIONING SCHEDULE

N.T.S.

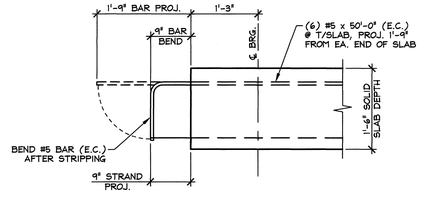

D SS1 PROJ. STRAND & BAR BEND DETAIL

3/4" = 1'-0"

MARK:	QTY.:	WT.:	VOL.:
AN-SS1	1	20.27 T	10.01 cy
AN-SS2	1	20.27 T	10.01 cy
AN-SS3	1	20.27 T	10.01 cy
AN-SS4	1	20.27 T	10.01 cy
AN-SS5	1	20.27 T	10.01 cy
AN-SS6	1	20.27 T	10.01 cy
AN-SS7	1	20.27 T	10.01 cy

MATERIAL LIST / SOLID SLAB

ITEM	MARK	DESCRIPTION	QTY./SLAB
1	AN-401E	#4 BENT BAR (LEVEL 1, EPOXY COATED)	67
2	AN-402E	#4 BENT BAR (LEVEL 1, EPOXY COATED)	20
3	AN-403E	#4 BENT BAR (LEVEL 1, EPOXY COATED)	8
4	AN-404E	#4 BENT BAR (LEVEL 1, EPOXY COATED)	4
5			
6		#5 x 50'-0" (LEVEL 1, EPOXY COATED)	6
7			
8			
9		SET OF (4) 1/2"ϕ STRAND LIFTING LOOPS	4
10			

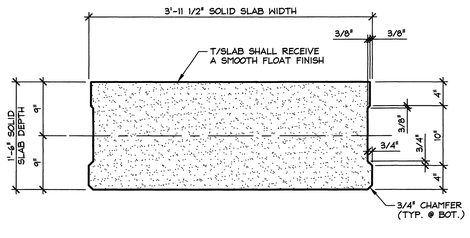

A SS1 DIMENSIONAL SECTION

1" = 1'-0"

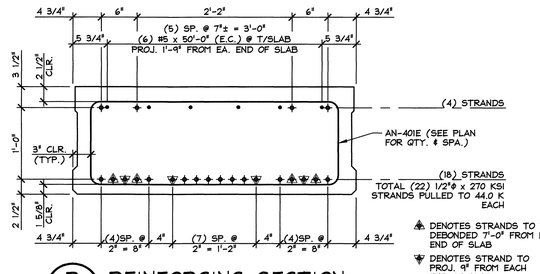

▲ DENOTES STRANDS TO BE DEBONDED 7'-0" FROM EA. END OF SLAB

▼ DENOTES STRAND TO PROJ. 9" FROM EACH END OF SLAB

B SS1 REINFORCING SECTION @ MID-SPAN

1" = 1'-0"

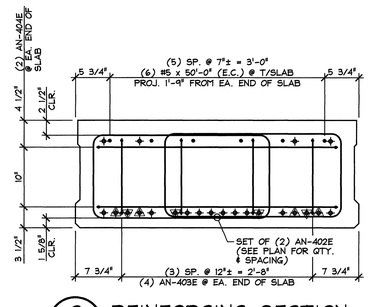

C SS1 REINFORCING SECTION @ SLAB END

1" = 1'-0"

1 6-1-15 REVISED AS NOTED

SUBMITTED
6.4.15
J. P. CARRARA & SONS, INC.
MIDDLEBURY, VT 05753

Approval Stamp: For Design & Fabrication

STATE OF VERMONT · RICHARD D. HOLDERWOOD · No. 9017 · LICENSED PROFESSIONAL ENGINEER

DATE 6/4/15

J.P. CARRARA & SONS INC.
Precast & Prestress Manufacturer
2464 CASE STR., MIDDLEBURY, VERMONT 05753 Phone:(802)388-6361 Fax:(802)388-9010

RENAUD BROS, INC.
CONTRACTOR
VERNON, VERMONT

STATE OF VERMONT AGENCY OF TRANSPORTATION
COUNTY OF WINDSOR

DATE: MAY 6, 2015
SCALE: NOTED

TOWN OF ANDOVER
VT RTE 11, RURAL MINOR ARTERIAL
BRIDGE NO.: 41 PROJECT NO.: BHF 016-1(29)

CHKD: J.C. DFTM: B.L.
JOB NO: 23465-015

PRESTRESSED SOLID SLAB DETAILS

DWG. NO: SS1

F:\VT-Bridges\23465-15 Andover 41\23465-SS1.dwg, 6/3/2015 1:48:01 PM

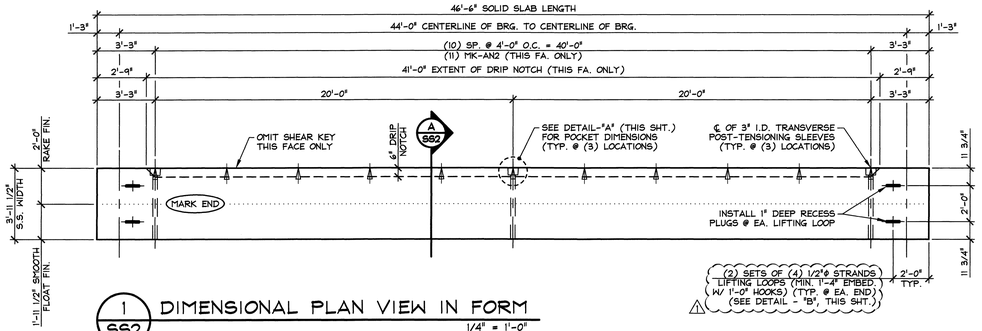

1 SS2 DIMENSIONAL PLAN VIEW IN FORM
1/4" = 1'-0"

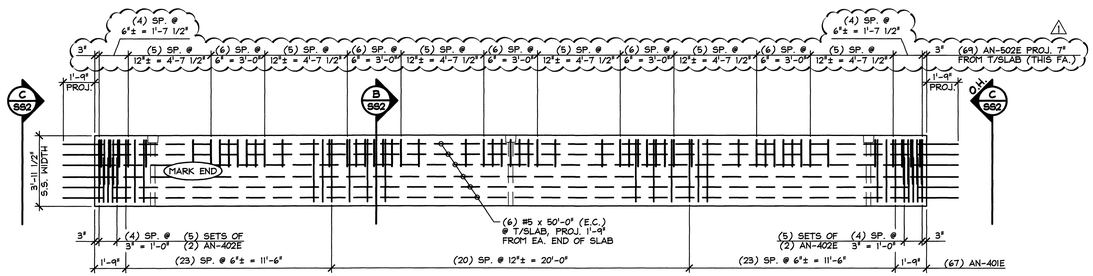

2 SS2 REINFORCING PLAN VIEW IN FORM
1/4" = 1'-0"

SHOP NOTE:
ADJUST REINFORCING AS REQUIRED TO CLEAR POST-TENSIONING SLEEVES AND POCKETS.

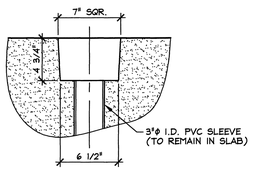

DETAIL - "A"
1 1/2" = 1'-0"

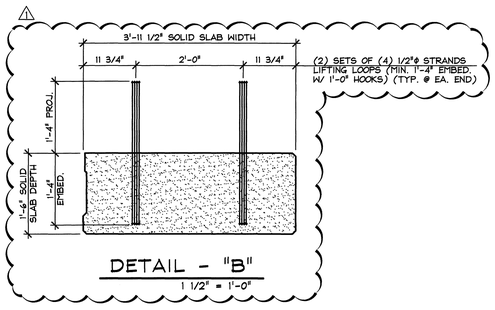

DETAIL - "B"
1 1/2" = 1'-0"

DETENSIONING SCHEDULE
N.T.S.

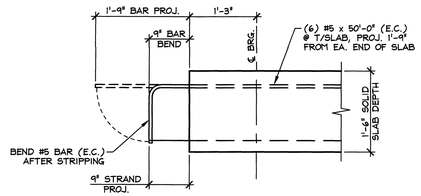

D SS2 PROJ. STRAND ℄ BAR BEND DETAIL
3/4" = 1'-0"

MARK:	QTY.:	WT.:	VOL.:
AN-SS8	1	20.48 T	10.11 cy
AN-SS9	1	20.48 T	10.11 cy

MATERIAL LIST / SOLID SLAB

ITEM	MARK	DESCRIPTION	QTY./SLAB
1	AN-401E	#4 BENT BAR (LEVEL 1, EPOXY COATED)	67
2	AN-402E	#4 BENT BAR (LEVEL 1, EPOXY COATED)	20
3	AN-403E	#4 BENT BAR (LEVEL 1, EPOXY COATED)	8
4	AN-404E	#4 BENT BAR (LEVEL 1, EPOXY COATED)	4
5			
6	AN-502E	#5 BENT BAR (LEVEL 1, EPOXY COATED)	69
7		#5 x 50'-0" (LEVEL 1, EPOXY COATED)	6
8			
9	MK-AN2	DAYTON C-24 TYPE 4-APR DECK FORM HANGER (GALV.)	11
10		SET OF (4) 1/2"ϕ STRAND LIFTING LOOPS	4

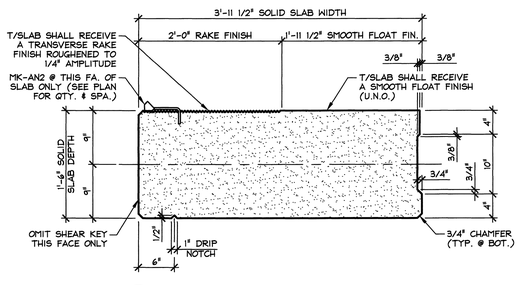

A SS2 DIMENSIONAL SECTION
1" = 1'-0"

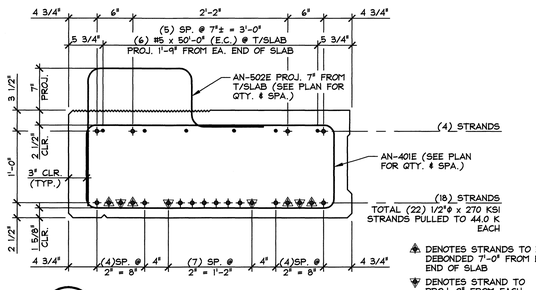

DENOTES STRANDS TO BE DEBONDED 7'-0" FROM EA. END OF SLAB

DENOTES STRAND TO PROJ. 9" FROM EACH END OF SLAB

B SS2 REINFORCING SECTION @ MID-SPAN
1" = 1'-0"

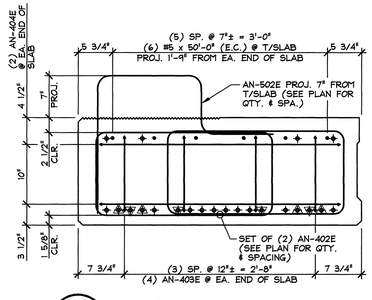

C SS2 REINFORCING SECTION @ SLAB END
1" = 1'-0"

△1 6-1-15 REVISED AS NOTED

SUBMITTED
6.4.15
J. P. CARRARA & SONS, INC.
MIDDLEBURY, VT 05753

Approval Stamp: For Design & Fabrication

DATE 6/4/15

J.P. CARRARA & SONS INC.
Precast & Prestress Manufacturer
2464 CASE STR., MIDDLEBURY, VERMONT 05753 Phone:(802)388-6361 Fax:(802)388-9010

RENAUD BROS, INC.
CONTRACTOR
VERNON, VERMONT

STATE OF VERMONT AGENCY OF TRANSPORTATION
COUNTY OF WINDSOR

DATE: MAY 6, 2015
SCALE: NOTED

TOWN OF ANDOVER
VT RTE 11, RURAL MINOR ARTERIAL
BRIDGE NO.: 41 PROJECT NO.: BHF 016-1(29)

CHKD: J.C. DFTM: B.L.
JOB NO: 23465-015

PRESTRESSED SOLID SLAB DETAILS

DWG. NO: SS2

F:\VT-Bridges\23465-15 Andover 41\23465-SS2.dwg, 6/3/2015 1:50:37 PM

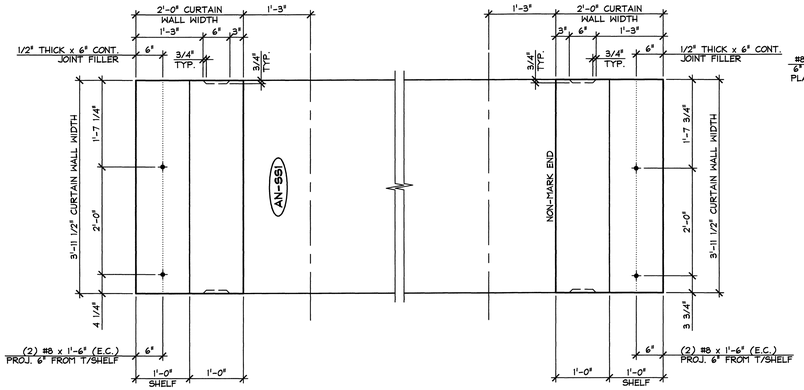

1 CW1 DIMENSIONAL PLAN VIEW IN FORM
3/4" = 1'-0"

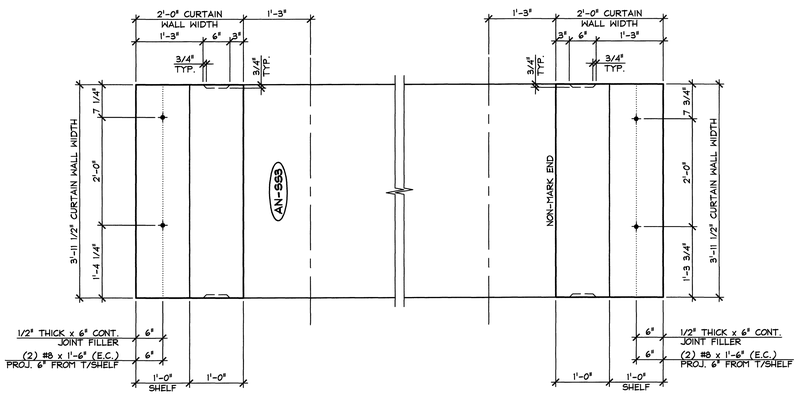

2 CW1 DIMENSIONAL PLAN VIEW IN FORM
3/4" = 1'-0"

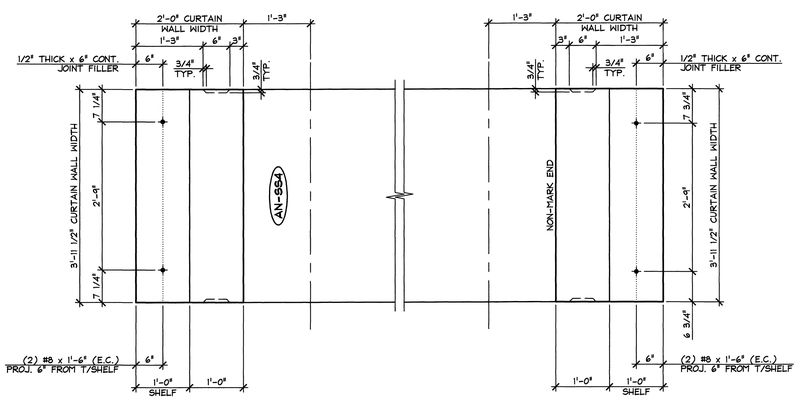

3 CW1 DIMENSIONAL PLAN VIEW IN FORM
3/4" = 1'-0"

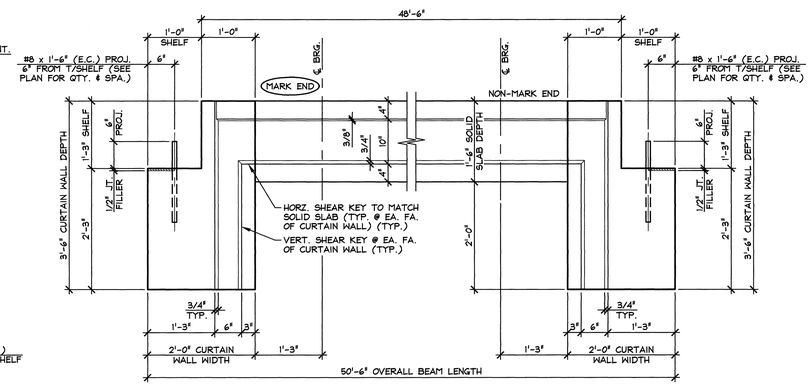

4 CW1 DIMENSIONAL ELEVATION
3/4" = 1'-0"

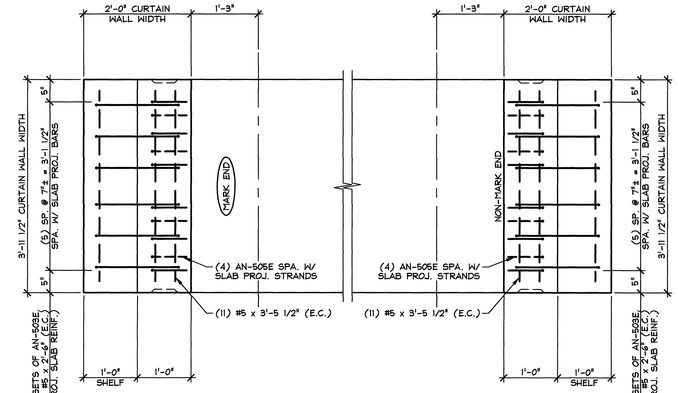

5 CW1 REINFORCING PLAN VIEW IN FORM
3/4" = 1'-0"

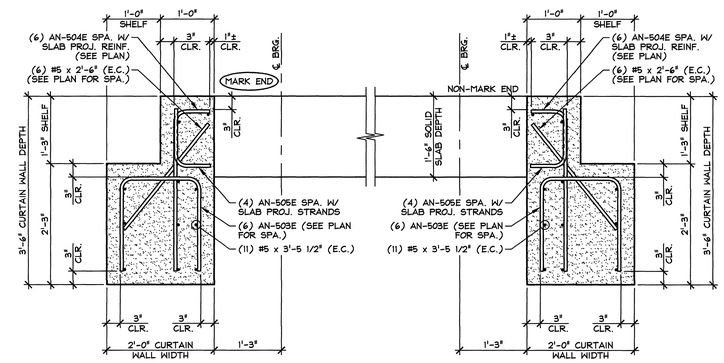

6 CW1 REINFORCING SECTION
3/4" = 1'-0"

10.01 cy = SOLID SLAB
0.84 cy = CURTAIN WALL (MARK END)
0.84 cy = CURTAIN WALL (NON-MARK END)
11.69 cy = TOTAL SLAB VOL.

20.27 T = SOLID SLAB
1.71 T = CURTAIN WALL (MARK END)
1.71 T = CURTAIN WALL (NON-MARK END)
23.69 T = TOTAL SLAB WT.

MARK:	AN-SS1	QTY.:	1
MARK:	AN-SS3	QTY.:	1
MARK:	AN-SS4	QTY.:	1

SHOP NOTE:
TOP OF CURTAIN WALL SHALL RECEIVE A FINISH MATCHING SOLID SLAB.

MATERIAL LIST / CURTAIN WALL

ITEM	MARK	DESCRIPTION	QTY./CURTAIN WALL	
			MARK END	NON-MARK END
1	AN-503E	#5 BENT BAR (LEVEL 1, EPOXY COATED)	6	6
2	AN-504E	#5 BENT BAR (LEVEL 1, EPOXY COATED)	6	6
3	AN-505E	#5 BENT BAR (LEVEL 1, EPOXY COATED)	4	4
4		#5 x 2'-6" (LEVEL 1, EPOXY COATED)	6	6
5		#5 x 3'-5 1/2" (LEVEL 1, EPOXY COATED)	11	11
6				
7		#8 x 1'-6" (LEVEL 1, EPOXY COATED)	2	2
8				

SUBMITTED
6.4.15
J. P. CARRARA & SONS, INC.
MIDDLEBURY, VT 05753

Approval Stamp: For Design & Fabrication

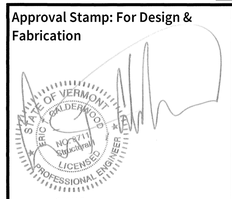

DATE 6/4/15

J.P. CARRARA & SONS INC.
Precast & Prestress Manufacturer
2464 CASE STR., MIDDLEBURY, VERMONT 05753 Phone:(802)388-6361 Fax:(802)388-9010

RENAUD BROS, INC.
CONTRACTOR
VERNON, VERMONT

STATE OF VERMONT AGENCY OF TRANSPORTATION
COUNTY OF WINDSOR

TOWN OF ANDOVER
VT RTE 11, RURAL MINOR ARTERIAL
BRIDGE NO.: 41 PROJECT NO.: BHF 016-1(29)

PRECAST CURTAIN WALL DETAILS

DATE: MAY 6, 2015
SCALE: NOTED
CHKD: J.C. DFTM: B.L.
JOB NO: 23465-015
DWG. NO: CW1

F:\VT-Bridges\23465-15 Andover 4\123465-CW1.dwg, 6/3/2015 1:52:46 PM

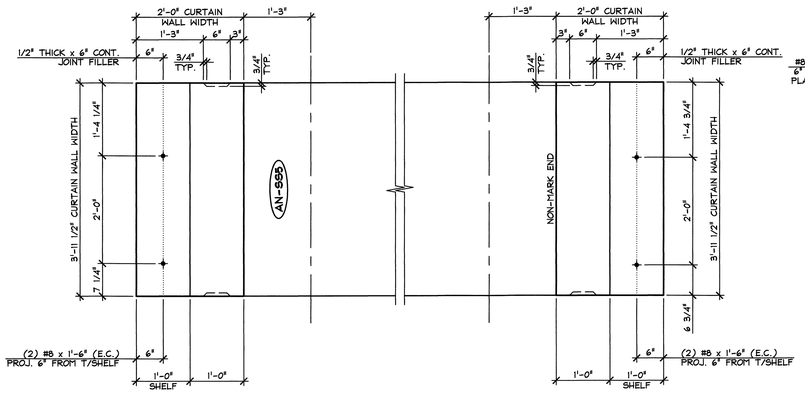

1 CW2 DIMENSIONAL PLAN VIEW IN FORM
3/4" = 1'-0"

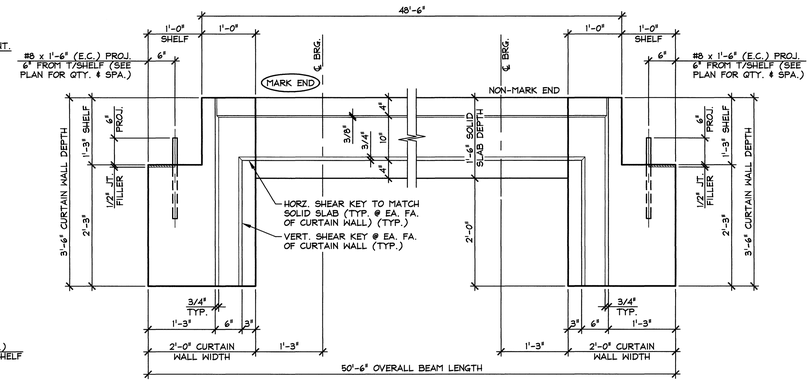

4 CW2 DIMENSIONAL ELEVATION
3/4" = 1'-0"

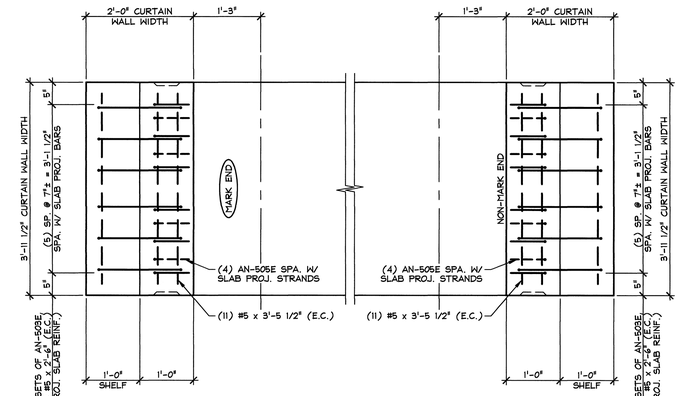

5 CW2 REINFORCING PLAN VIEW IN FORM
3/4" = 1'-0"

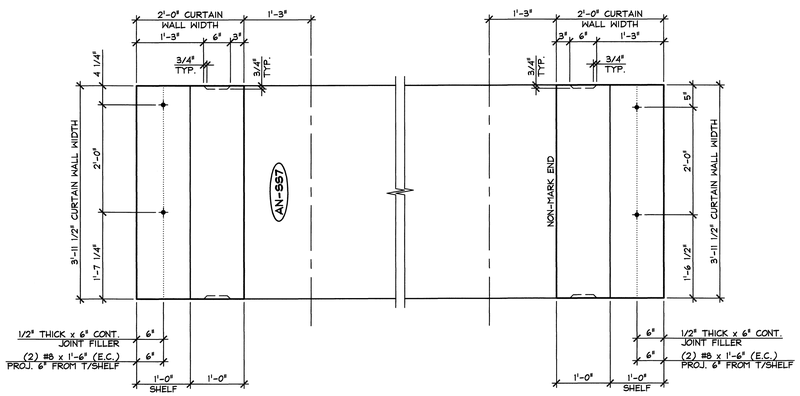

2 CW2 DIMENSIONAL PLAN VIEW IN FORM
3/4" = 1'-0"

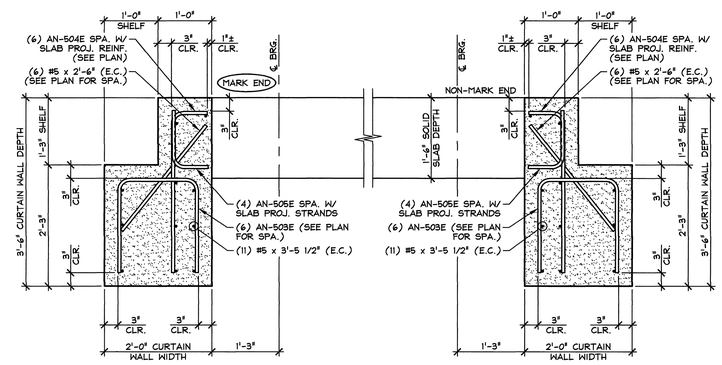

6 CW2 REINFORCING SECTION
3/4" = 1'-0"

THIS PLAN NOT USED

3 CW2 DIMENSIONAL PLAN VIEW IN FORM
3/4" = 1'-0"

10.01 cy = SOLID SLAB
0.84 cy = CURTAIN WALL (MARK END)
0.84 cy = CURTAIN WALL (NON-MARK END)
11.69 cy = TOTAL SLAB VOL.

20.27 T = SOLID SLAB
1.71 T = CURTAIN WALL (MARK END)
1.71 T = CURTAIN WALL (NON-MARK END)
23.69 T = TOTAL SLAB WT.

MARK: AN-SS5	QTY.: 1
MARK: AN-SS7	QTY.: 1
MARK:	QTY.:

SHOP NOTE:
TOP OF CURTAIN WALL SHALL RECEIVE A FINISH MATCHING SOLID SLAB.

MATERIAL LIST / CURTAIN WALL

ITEM	MARK	DESCRIPTION	QTY./CURTAIN WALL	
			MARK END	NON-MARK END
1	AN-503E	#5 BENT BAR (LEVEL 1, EPOXY COATED)	6	6
2	AN-504E	#5 BENT BAR (LEVEL 1, EPOXY COATED)	6	6
3	AN-505E	#5 BENT BAR (LEVEL 1, EPOXY COATED)	4	4
4		#5 x 2'-6" (LEVEL 1, EPOXY COATED)	6	6
5		#5 x 3'-5 1/2" (LEVEL 1, EPOXY COATED)	11	11
6				
7		#8 x 1'-6" (LEVEL 1, EPOXY COATED)	2	2
8				

SUBMITTED
6.4.15
J. P. CARRARA & SONS, INC.
MIDDLEBURY, VT 05753

Approval Stamp: For Design & Fabrication

STATE OF VERMONT — ERIC J. GOLDENWOOD — NO. 11111 — LICENSED — PROFESSIONAL ENGINEER

DATE 6/4/15

J.P. CARRARA & SONS INC.
Precast & Prestress Manufacturer
2464 CASE STR., MIDDLEBURY, VERMONT 05753 Phone:(802)388-6361 Fax:(802)388-9010

RENAUD BROS, INC.
CONTRACTOR
VERNON, VERMONT

STATE OF VERMONT AGENCY OF TRANSPORTATION
COUNTY OF WINDSOR

TOWN OF ANDOVER
VT RTE 11, RURAL MINOR ARTERIAL
BRIDGE NO.: 41 PROJECT NO.: BHF 016-1(29)

PRECAST CURTAIN WALL DETAILS

DATE: MAY 6, 2015
SCALE: NOTED
CHKD: J.C. DFTM: B.L.
JOB NO: 23465-015
DWG. NO: CW2

F:\VT-Bridges\23465-15 Andover 41\23465-CW2.dwg, 6/3/2015 1:59:01 PM

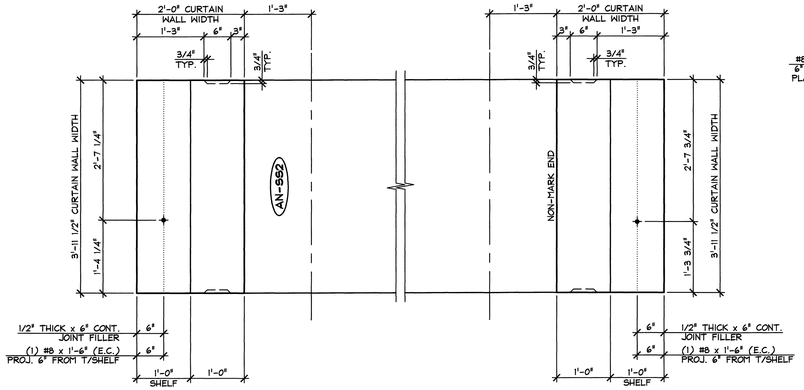

1 CW3 DIMENSIONAL PLAN VIEW IN FORM
3/4" = 1'-0"

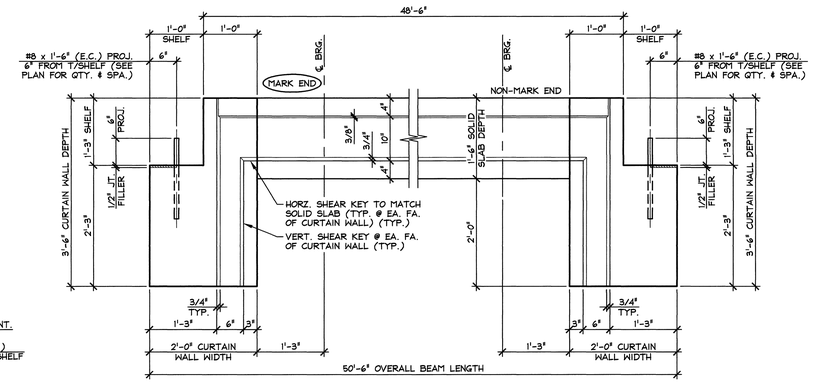

4 CW3 DIMENSIONAL ELEVATION
3/4" = 1'-0"

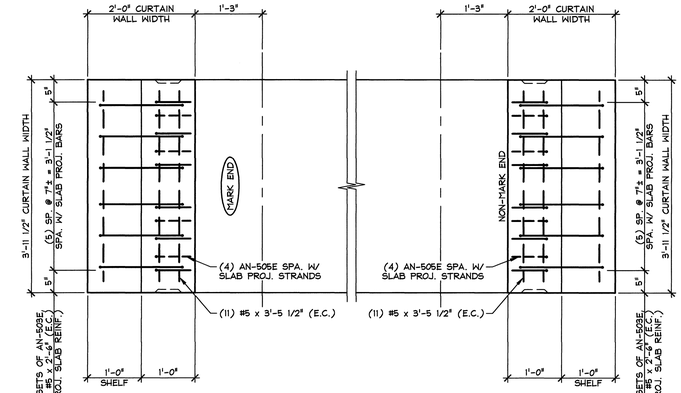

5 CW3 REINFORCING PLAN VIEW IN FORM
3/4" = 1'-0"

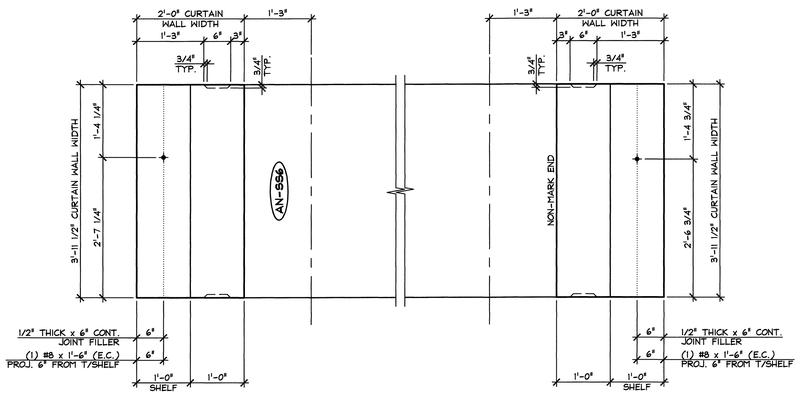

2 CW3 DIMENSIONAL PLAN VIEW IN FORM
3/4" = 1'-0"

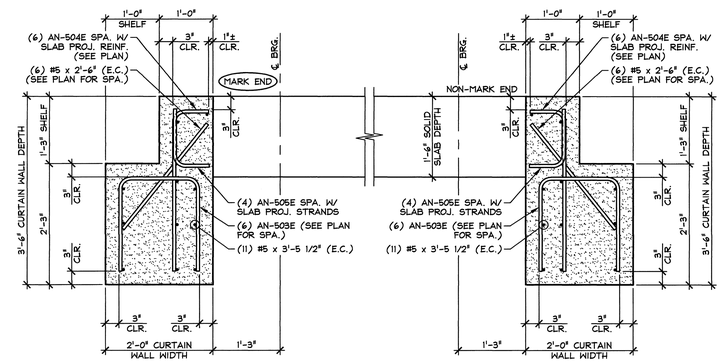

6 CW3 REINFORCING SECTION
3/4" = 1'-0"

THIS PLAN NOT USED

3 CW3 DIMENSIONAL PLAN VIEW IN FORM
3/4" = 1'-0"

MARK: AN-SS2	QTY.: 1		
MARK: AN-SS6	QTY.: 1		
MARK:	QTY.:		

SHOP NOTE:
TOP OF CURTAIN WALL SHALL RECEIVE A FINISH MATCHING SOLID SLAB.

10.01 cy = SOLID SLAB
0.84 cy = CURTAIN WALL (MARK END)
0.84 cy = CURTAIN WALL (NON-MARK END)
11.69 cy = TOTAL SLAB VOL.

20.27 T = SOLID SLAB
1.71 T = CURTAIN WALL (MARK END)
1.71 T = CURTAIN WALL (NON-MARK END)
23.69 T = TOTAL SLAB WT.

MATERIAL LIST / CURTAIN WALL

ITEM	MARK	DESCRIPTION	QTY./CURTAIN WALL: MARK END	QTY./CURTAIN WALL: NON-MARK END
1	AN-503E	#5 BENT BAR (LEVEL 1, EPOXY COATED)	6	6
2	AN-504E	#5 BENT BAR (LEVEL 1, EPOXY COATED)	6	6
3	AN-505E	#5 BENT BAR (LEVEL 1, EPOXY COATED)	4	4
4		#5 x 2'-6" (LEVEL 1, EPOXY COATED)	6	6
5		#5 x 3'-5 1/2" (LEVEL 1, EPOXY COATED)	11	11
6				
7		#8 x 1'-6" (LEVEL 1, EPOXY COATED)	1	1
8				

SUBMITTED
6.4.15
J. P. CARRARA & SONS, INC.
MIDDLEBURY, VT 05753

Approval Stamp: For Design & Fabrication

STATE OF VERMONT · GOLDEN WOOD · NOVIT · LICENSED · PROFESSIONAL ENGINEER

DATE 6/4/15

J.P. CARRARA & SONS INC.
Precast & Prestress Manufacturer
2464 CASE STR., MIDDLEBURY, VERMONT 05753 Phone:(802)388-6361 Fax:(802)388-9010

RENAUD BROS, INC.
CONTRACTOR
VERNON, VERMONT

STATE OF VERMONT AGENCY OF TRANSPORTATION
COUNTY OF WINDSOR

TOWN OF ANDOVER
VT RTE 11, RURAL MINOR ARTERIAL
BRIDGE NO.: 41 PROJECT NO.: BHF 016-1(29)

PRECAST CURTAIN WALL DETAILS

DATE: MAY 6, 2015
SCALE: NOTED
CHKD: J.C. DFTM: B.L.
JOB NO: 23465-015
DWG. NO: CW3

F:\VT-Bridges\23465-15 Andover 41\23465-CW3.dwg, 6/3/2015 2:11:50 PM

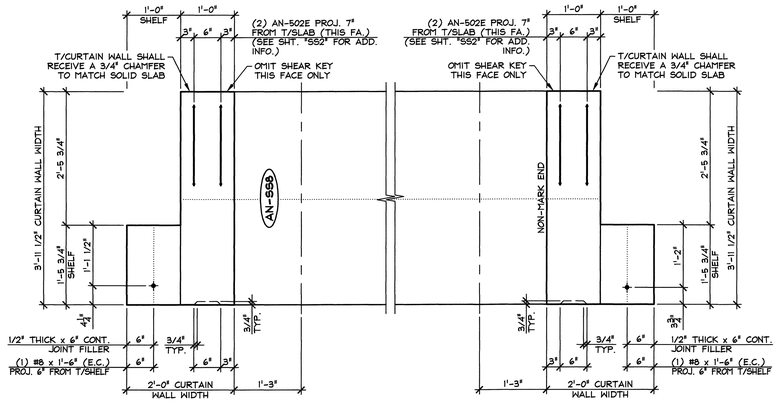

1 CW4 DIMENSIONAL PLAN VIEW IN FORM
3/4" = 1'-0"

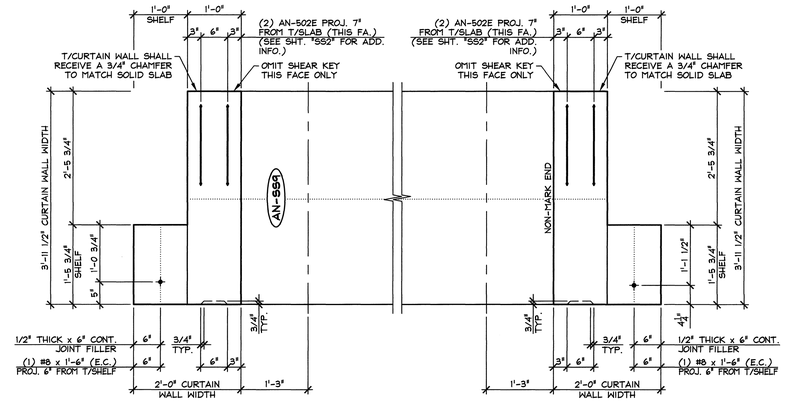

2 CW4 DIMENSIONAL PLAN VIEW IN FORM
3/4" = 1'-0"

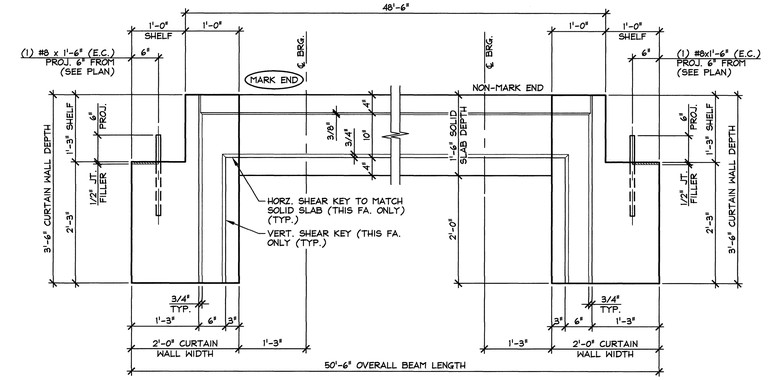

3 CW4 DIMENSIONAL ELEVATION
3/4" = 1'-0"

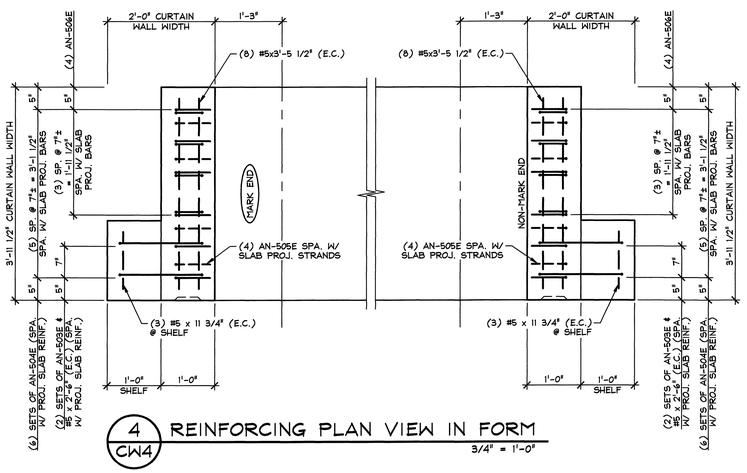

4 CW4 REINFORCING PLAN VIEW IN FORM
3/4" = 1'-0"

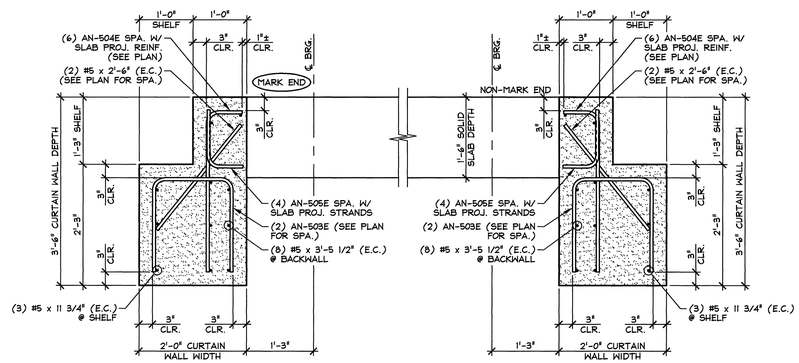

5 CW4 REINFORCING SECTION
3/4" = 1'-0"

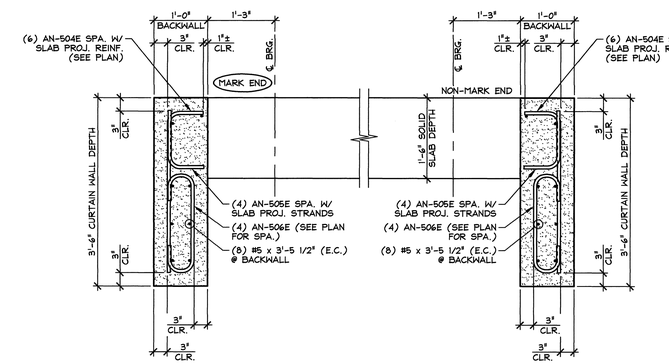

6 CW4 REINFORCING SECTION
3/4" = 1'-0"

MARK: AN-SS8	QTY.: 1
MARK: AN-SS9	QTY.: 1

SHOP NOTE:
TOP OF CURTAIN WALL SHALL RECEIVE A FINISH MATCHING SOLID SLAB.

10.11 cy = SOLID SLAB
0.64 cy = CURTAIN WALL (MARK END)
0.64 cy = CURTAIN WALL (NON-MARK END)
11.39 cy = TOTAL SLAB VOL.

20.48 T = SOLID SLAB
1.29 T = CURTAIN WALL (MARK END)
1.29 T = CURTAIN WALL (NON-MARK END)
23.06 T = TOTAL SLAB WT.

SUBMITTED
6.4.15
J. P. CARRARA & SONS, INC.
MIDDLEBURY, VT 05753

MATERIAL LIST / CURTAIN WALL

ITEM	MARK	DESCRIPTION	QTY./CURTAIN WALL	
			MARK END	NON-MARK END
1	AN-502E	#5 BENT BAR (LEVEL 1, EPOXY COATED)	2	2
2	AN-503E	#5 BENT BAR (LEVEL 1, EPOXY COATED)	2	2
3	AN-504E	#5 BENT BAR (LEVEL 1, EPOXY COATED)	6	6
4	AN-505E	#5 BENT BAR (LEVEL 1, EPOXY COATED)	4	4
5	AN-506E	#5 BENT BAR (LEVEL 1, EPOXY COATED)	6	6
6		#5 x 2'-6" (LEVEL 1, EPOXY COATED)	2	2
7		#5 x 3'-5 1/2" (LEVEL 1, EPOXY COATED)	8	8
8		#5 x 11 3/4" (LEVEL 1, EPOXY COATED)	3	3
9				
10		#8 x 1'-6" (LEVEL 1, EPOXY COATED)	1	1

Approval Stamp: For Design & Fabrication

STATE OF VERMONT
BRIAN C. BOLDERWOOD
NO. 11111
LICENSED
PROFESSIONAL ENGINEER

DATE 6/4/15

J.P. CARRARA & SONS INC.
Precast & Prestress Manufacturer
2464 CASE STR., MIDDLEBURY, VERMONT 05753 Phone:(802)388-6361 Fax:(802)388-9010

RENAUD BROS, INC.
CONTRACTOR
VERNON, VERMONT

STATE OF VERMONT AGENCY OF TRANSPORTATION
COUNTY OF WINDSOR

TOWN OF ANDOVER
VT RTE 11, RURAL MINOR ARTERIAL
BRIDGE NO.: 41 PROJECT NO.: BHF 016-1(29)

PRECAST CURTAIN WALL DETAILS

DATE: MAY 6, 2015
SCALE: NOTED
CHKD: J.C. DFTM: B.L.
JOB NO: 23465-015
DWG. NO: CW4

F:\VT-Bridges\23465-15 Andover 4\123465-CW4.dwg, 6/3/2015 2:13:11 PM

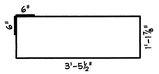

AN-401E
#4 BENT BAR
LEVEL 1 (EPOXY COATED)
USE 2"ø [50 mm] PIN
(603) REQ'D.

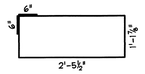

AN-402E
#4 BENT BAR
LEVEL 1 (EPOXY COATED)
USE 2"ø [50 mm] PIN
(180) REQ'D.

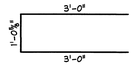

AN-403E
#4 BENT BAR
LEVEL 1 (EPOXY COATED)
USE 2"ø [50 mm] PIN
(72) REQ'D.

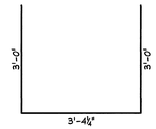

AN-404E
#4 BENT BAR
LEVEL 1 (EPOXY COATED)
USE 2"ø [50 mm] PIN
(36) REQ'D.

THIS DETAIL NOT USED

AN-501E

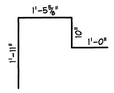

AN-502E
#5 BENT BAR
LEVEL 1 (EPOXY COATED)
USE 2¾"ø [70 mm] PIN
(146) REQ'D.

AN-503E
#5 BENT BAR
LEVEL 1 (EPOXY COATED)
USE 2¾"ø [70 mm] PIN
(92) REQ'D.

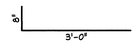

AN-504E
#5 BENT BAR
LEVEL 1 (EPOXY COATED)
USE 2¾"ø [70 mm] PIN
(108) REQ'D.

AN-505E
#5 BENT BAR
LEVEL 1 (EPOXY COATED)
USE 2¾"ø [70 mm] PIN
(72) REQ'D.

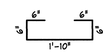

AN-506E
#5 BENT BAR
LEVEL 1 (EPOXY COATED)
USE 2¾"ø [70 mm] PIN
(24) REQ'D.

MISCELLANEOUS MATERIALS

ITEM	MARK	QTY.	DESCRIPTION	REMARKS
1	EM-AN1	6	3/4" THICK x 6" x 6" W/ (1) 2"ø HOLE (GALV.)	FOR ERECTION; SEE DETAIL THIS SHEET
2		6	0.60"ø SINGLE USE STRESSING CHUCK	FOR ERECTION
3		3	0.60"ø x 270 KSI x 38'-9" LONG POLYSTRAND	FOR ERECTION
4		24	COMPRESSIBLE SEALER SELF ADHESIVE	FOR ERECTION
5				
6				
7				
8		54	#5 x 50'-0" (LEVEL 1, EPOXY COATED)	
9				
10	MK-AN2	22	DAYTON C-24 TYPE 4-APR DECK FORM HANGER	GALVANIZE
11		36	SET OF (4) 1/2"ø STRAND LIFTING LOOPS △1	
12				
13				
14				
15		92	#5 x 2'-6" (LEVEL 1, EPOXY COATED)	CAST INTO CURTAIN WALL
16		186	#5 x 3'-5 1/2" (LEVEL 1, EPOXY COATED)	CAST INTO CURTAIN WALL
17		12	#5 x 11 3/4" (LEVEL 1, EPOXY COATED)	CAST INTO CURTAIN WALL
18				
19		28	#8 x 1'-6" (LEVEL 1, EPOXY COATED)	CAST INTO CURTAIN WALL
20				

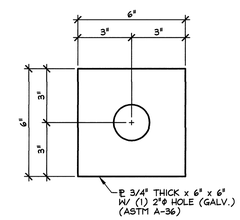

EM - AN1
3" = 1'-0"

△1 6-1-15 REVISED AS NOTED

SUBMITTED
6.4.15
J. P. CARRARA & SONS, INC.
MIDDLEBURY, VT 05753

Approval Stamp: For Design & Fabrication

STATE OF VERMONT
BRIAN GOLDENWOOD
NO. 9717
LICENSED
PROFESSIONAL ENGINEER

DATE 6/4/15

J.P. CARRARA & SONS INC.
Precast & Prestress Manufacturer
2464 CASE STR., MIDDLEBURY, VERMONT 05753 Phone:(802)388-6361 Fax:(802)388-9010

RENAUD BROS, INC.
CONTRACTOR
VERNON, VERMONT

STATE OF VERMONT AGENCY OF TRANSPORTATION
COUNTY OF WINDSOR

TOWN OF ANDOVER
VT RTE 11, RURAL MINOR ARTERIAL
BRIDGE NO.: 41 PROJECT NO.: BHF 016-1(29)

MATERIALS LIST

DATE:	MAY 6, 2015
SCALE:	NOTED
CHKD: J.C.	DFTM: B.L.
JOB NO:	23465-015
DWG. NO:	M1

F:\VT-Bridges\23465-15 Andover 41\23465-M1.dwg, 6/3/2015 2:14:37 PM

CALDERWOOD ENGINEERING
222 RIVER ROAD
RICHMOND, ME 04357
PH. (207) 737-2007 FAX (207) 737-2008

Andover, VT Bridge Superstructure Design

***REV01:* INCLUDED UPDATED LIFTER LOOP CALCULATIONS TO REFLECT SECONDARY POUR OF CURB & BRIDGE RAIL**

Designer: ***Rachael A. Joyce***
Check: ***GNM***

*Prestressed, 9 plank solid rectangular sections, 3'-11.5" 44' CL bearing to CL bearing span**, 46'-6" beam O.A.,***
3 in bituminous surface, Bridge Railing Galvanized 2 rail box beam standard S-360A

Check: Strength 1, Service 1, Service 3, Fatigue 1
Notes: HS-20, truck tandem
Deck Superstructure type (g) AASHTO LRFD Table 4.6.2.2.1-1
Reference: AASHTO LRFD Bridge Design Specifications, Seventh Edition, 2014; PCI Design Handbook

CALDERWOOD ENGINEERING
222 RIVER ROAD
RICHMOND, ME 04357
PH. (207) 737-2007 FAX (207) 737-2008

Section Properties

Span: $L_{bear} := 44.0\ ft$

CL bearing to CL bearing

Beam length $L_{total} := L_{bear} + 15\ in \cdot 2 = 46.5\ ft$

Section Type: 47.5" Wide X 18" Deep Solid Slab

Depth: $h := 18\ in$

Width: $b := 47.5\ in$

Number of beams $N_b := 9$

Total bridge width $W := b \cdot N_b + (N_b - 1) \cdot \frac{1}{2}\ in = 35.958\ ft$ *(2) 11.5' travel lanes*

Thickness of Shear Key $t_{shearkey} := 0.75\ in$

Solid Section Properties

Gross Area of Solid Section $A_g := h \cdot b = 855\ in^2$

Moment of Inertia of Solid Section
(interior beam, no curb) $I_x := \frac{b \cdot h^3}{12} = 23085\ in^4$ $I_y := \frac{h \cdot b^3}{12} = 160757.813\ in^4$

Polar Moment of Inertia $I_p := I_x + I_y = 183842.813\ in^4$

St. Venant's Torsional Intertia,
for solid sections per C4.6.2.2.1-2
LRFD 2014 $J := \frac{A_g^4}{40 \cdot I_p} = 72670.44\ in^4$

Extreme fiber to CG $y_b := \frac{h}{2}$ $y_t := y_b$

Section Modulus Interior Beam
(no curb) $S_b := \frac{I_x}{y_b}$ $S_b = 2565\ in^3$ $S := S_b$

$S_t := \frac{I_x}{y_t}$ $S_t = 2565\ in^3$

CALDERWOOD ENGINEERING
222 RIVER ROAD
RICHMOND, ME 04357
PH. (207) 737-2007 FAX (207) 737-2008

Concrete Properties @ Service Load:

28 day concrete compressive strength $f'_c := 6\ ksi$ $\sqrt{f'_c \cdot ksi} = 2.449\ ksi$

normal weight concrete with rebar, unit weight $\gamma_c := 0.150\ \frac{kip}{ft^3}$

correction factor for source of aggregate, taken as 1 (5.4.2.4) $K_1 := 1.0$

Concrete elastic modulus (5.4.2.4-1) $E_c := 33000 \cdot K_1 \cdot \left(\left(\frac{\gamma_c}{\frac{kip}{ft^3}}\right)^{1.5}\right) \cdot \sqrt{f'_c \cdot ksi}$ $E_c = 4695.98\ ksi$

$E_c = 4695982.325\ psi$

Concrete Properties @ Prestress Transfer:

Concrete compressive strength at release $f'_{ci} := 4\ ksi$

Concrete modulus of elasticity at realease $E_{ci} := 33000 \cdot K_1 \cdot \left(\left(\frac{\gamma_c}{\frac{kip}{ft^3}}\right)^{1.5}\right) \cdot \sqrt{f'_{ci} \cdot ksi}$ $E_{ci} = 3834.25\ ksi$

Prestressing Tendons:

Prestressing method: ***pretensioning***

Tendon Profile

0.6-in diameter strand $d_b := 0.6\ in$

Number of strands $N_{ps} := 22$

Area of prestressing steel $A_{strand} := 0.217\ in^2$ $A_{ps} := A_{strand} \cdot N_{ps} = 4.774\ in^2$

Type of relaxation:
low relaxation strand

Specified tensile strength of tendon $f_{pu} := 270\ ksi$

Specified yield limit for strands

Modulus of Elasticity $E_{ps} := 28500\ ksi$

CALDERWOOD ENGINEERING
222 RIVER ROAD
RICHMOND, ME 04357
PH. (207) 737-2007 FAX (207) 737-2008

Self weight dead load (DC, DW)

Self weight dead load $w_g := A_g \cdot \gamma_c = 0.891 \ \frac{kip}{ft}$

Superimposed dead load

3" bituminous wearing surface (VTrans Structures Design Manual 5th Edition Table 3.3.1) $w_{ws} := 3 \ in \cdot 0.150 \ \frac{kip}{ft^3} \cdot b = 0.148 \ \frac{kip}{ft}$

Rail Weight (Bridge Rail Galvanized 2 Rail Box Beam Standard S-360A) $w_{rail} := 50 \ plf$

50plf (without curb) $w_{curb} := \gamma_c \cdot (2 \ ft \cdot 7 \ in) = 175 \ plf$

exterior beams carry 60%, interior beams carry 40%

Interior beams carry 40% $w_{bint} := 2 \cdot (w_{rail} + w_{curb}) \cdot \frac{0.40}{7} = 0.026 \ klf$

Exterior beams carry 60% $w_{bext} := 2 \cdot (w_{rail} + w_{curb}) \cdot \frac{0.60}{2} = 0.135 \ klf$

Unfactored Bending moment at mid-span

Self Weight $M_g := \frac{w_g \cdot L_{bear}^2}{8}$ $M_g = 215.531 \ kip \cdot ft$

Wear Surface $M_{ws} := \frac{w_{ws} \cdot L_{bear}^2}{8}$ $M_{ws} = 35.92 \ kip \cdot ft$

Rail - Interior Beam $M_{bint} := \frac{w_{bint} \cdot L_{bear}^2}{8}$ $M_{bint} = 6.22 \ kip \cdot ft$

Rail - Exterior Beam $M_{bext} := \frac{w_{bext} \cdot L_{bear}^2}{8}$ $M_{bext} = 32.67 \ kip \cdot ft$

CALDERWOOD ENGINEERING
222 RIVER ROAD
RICHMOND, ME 04357
PH. (207) 737-2007 FAX (207) 737-2008

Unfactored Shear at Supports

Self Weight - Interior Beam $V_g := \frac{w_g \cdot L_{bear}}{2}$ $V_g = 19.594$ kip

Wear Surface - Interior Beam $V_{ws} := \frac{w_{ws} \cdot L_{bear}}{2}$ $V_{ws} = 3.266$ kip

Rail - Interior Beam $V_{bint} := \frac{w_{bint} \cdot L_{bear}}{2}$ $V_{bint} = 0.566$ kip

Rail - Exterior Beam $V_{bext} := \frac{w_{bext} \cdot L_{bear}}{2}$ $V_{bext} = 2.97$ kip

see 048-br-15 Calculations/Dead Load

CALDERWOOD ENGINEERING
222 RIVER ROAD
RICHMOND, ME 04357
PH. (207) 737-2007 FAX (207) 737-2008

Distribution Factor Method for Moment (AASHTO LRFD 4.6.2.2.2)

Table 4.6.2.2.2b-1 Distribution of Live Load for Moment, Interior Beams
concrete beams used in multibeam decks (g), two design lanes loaded

---

Two design lanes loaded:
Number of beams (Nb)
defined above

$k := 2.5 \cdot N_b^{-0.2} = 1.611$

$\text{Checkk} := \text{if } k \geq 1.5 \;\|\; \text{"OK"} \;\; \text{else} \;\|\; \text{"k=1.5"}$

$\text{Checkk} = \text{"OK"}$

$J = 72670.444 \text{ in}^4$

$I_x = 23085 \text{ in}^4$

$L_{bear} = 44 \text{ ft}$

Interior Moment Distribution Factor (gmint)
per table 4.6.2.2.2b-1, type g, two design
lanes page 4-37 (LRFD 2014)

$$g_{mint} := k \cdot \left(\frac{\left(\frac{b}{in}\right)}{305}\right)^{0.6} \cdot \left(\frac{b \cdot 12}{12.0 \cdot L_{bear}}\right)^{0.2} \cdot \left(\frac{I_x}{J}\right)^{0.06} \qquad g_{mint} = 0.304$$

NOTE: factor of 12 included above to account for MATHCAD correcting units, AASHTO already accounts for difference in units with included factor, e.g. b (inches), Lbear (feet)

Table 4.6.2.2.2d-1 Distribution of Live Load for Moment, Exterior Beams
concrete beams used in multibeam decks (g), two design lanes loaded
two 11'-6" lanes + 4'-6" shoulders => two 16' lanes + 2' curbs => 36' overall width

overall width of the bridge $\qquad W = 35.958 \text{ ft}$

rail guard width (inboard distance from center of beam) $\qquad b_{rail} := 0.5 \text{ ft}$

Exterior Moment Distribution Factor (gmext)

Note: distance de shall be taken as positive if the exterior web is inboard of the interior face of the traffic railing (4.6.2.2.2d-Exterior Beams)

$d_e := \frac{b}{2} - b_{rail} \qquad d_e = 1.479 \text{ ft}$

for de< 2.0, OK

For concrete box beams used in multibeam decks (em > 1.0)

$e_m := 1.04 + \frac{d_e}{25 \cdot \text{ft}} \qquad e_m = 1.099$

$g_{mext} := e_m \cdot g_{mint} \qquad g_{mext} = 0.335$

Max. Moment Load Distribution factor $\qquad g_m := \max(g_{mint}, g_{mext}) \qquad g_m = 0.335$

CALDERWOOD ENGINEERING
222 RIVER ROAD
RICHMOND, ME 04357
PH. (207) 737-2007 FAX (207) 737-2008

Distribution Factor Method for Shear (AASHTO LRFD 4.6.2.2.3)

Table 4.6.2.2.3a-1 Distribution of Live Load for Shear, Interior Beams
concrete beams used in multibeam decks (g), one design lane loaded

Interior Shear Distribution Factor

Based on 4.6.2.2.3a Interior beams, the values of b, L, Nb, J and I comply with the ranges of applicability given in table 4.6.2.2.3a

$b = 47.5\ \text{in}$

$L_{bear} = 44\ \text{ft}$

$N_b = 9$

$J = 72670.444\ \text{in}^4$

$I_x = 23085\ \text{in}^4$ Therefore, Table 4.6.2.2.3a-1 is applicable

$$g_{vint} := \left(\frac{\left(\frac{b}{in}\right)}{156}\right)^{0.4} \cdot \left(\frac{b \cdot 12}{12.0 \cdot L_{bear}}\right)^{0.1} \cdot \left(\frac{I_x}{J}\right)^{0.05} \cdot \left(\frac{\left(\frac{b}{in}\right)}{48}\right) \qquad g_{vint} = 0.456$$

Exterior Shear Distribution Factor

Table 4.6.2.2.3b-1, applicable cross section (g) $d_e = 1.479\ \text{ft}$ conservative

Note: distance de shall be taken as positive if the exterior web is inboard of the interior face of the traffic railing (4.6.2.2.2d-Exterior Beams)

For concrete box beams used in multibeam decks

$$e_v := 1.0 + \left(\frac{d_e + \frac{b}{12} - 2.0\ \text{in}}{40 \cdot \text{ft}}\right)^{0.5} \qquad e_v = 1.203$$

$$g_{vext} := e_v \cdot g_{vint} \cdot 1.0 \qquad g_{vext} = 0.549$$

Skew correction for Shear Table 4.6.2.2.3c-1 $\theta := 0\ °$

$$skewfactor := 1.0 + \frac{12.0 \cdot \left(\frac{L_{bear}}{ft}\right)}{90 \cdot \left(\frac{h}{in}\right)} \cdot \sqrt{\tan(\theta)}$$

$skewfactor = 1.0$

$g_{vint} := g_{vint} \cdot skewfactor \qquad g_{vint} = 0.456$

$g_{vext} := g_{vext} \cdot skewfactor \qquad g_{vext} = 0.549 \qquad g_v := \max(g_{vint}, g_{vext}) \qquad g_v = 0.549$

DISTRIBUTION FACTORS

$g_{mint} = 0.304 \qquad g_{vint} = 0.456$

$g_{mext} = 0.335 \qquad g_{vext} = 0.549$

USER NOTE: Input max distribution factors to excel sheets for int. & ext. Live Load Moment and Shear calcs.

Live Loads AASHTO LRFD 3.6:

3.6.1.2 Design Vehicular Live Load HL-93 consists of a combination of

- design truck **or** design tandem **and**
- design lane load

Design Truck: spacing between two 32kip axles varied between 14ft & 30ft to produce extreme force effects. We calculate at 44 locations for 44ft span.

number of design lanes: 2

filepath to calculations: ".\048-br-15_CALCULATIONS.xlsx"

HS-20 Load Results assume 2 design lanes loaded, multipresence factor = 1.0 for two lanes loaded (AASHTO LRFD 3.6.1.1.2-1)

HS20 := READEXCEL ("..\048-br-15_CALCULATIONS.xlsx" , "HS-20 (Controls)!K8:K9")

$$HS20 = \begin{bmatrix} 520.727 \\ 56.727 \end{bmatrix}$$

$$M_{HS20} := HS20_{0,0}\ kip \cdot ft = 520.727\ kip \cdot ft \qquad V_{HS20} := HS20_{1,0}\ kip = 56.727\ kip$$

Tandem Truck

Tandem := READEXCEL ("..\048-br-15_CALCULATIONS.xlsx" , "Tandem !K8:K9")

$$Tandem = \begin{bmatrix} 501.136 \\ 47.727 \end{bmatrix}$$

$$M_{tand} := Tandem_{0,0}\ kip \cdot ft = 501.14\ kip \cdot ft \qquad V_{tand} := Tandem_{1,0}\ kip = 47.73\ kip$$

HS-20 Design Truck controls for both shear and moment, before factors applied.

Lane Loads (3.6.1.2.4): Shall consist of a load of 0.64 klf uniformly distributed in longitudinal direction. Transversely, design lane load shall be assumed uniformly distributed over a 10ft width.

Strength 1

Load Factors Per AASHTO LRFD

$$\gamma_{LL} := 1.75 \qquad \gamma_{DC} := 1.25 \qquad \gamma_{DW} := 1.5 \qquad I.M. := 1.33$$

EXTERIOR BEAM MOMENTS

EXTERIOR BEAM MOMENT Load Case	Mg (k-ft)	Mb (ext) (k-ft)	Mws (k-ft)	M(LL+IM) (k-ft)	M(DC) (k-ft)	M(WS) (k-ft)	M(LL+IM) (k-ft)2	Mtotal (k-ft)
Strength 1	269.41	27.23	53.88	496.82	296.64	53.88	496.82	847.34
Service 1	215.53	21.78	35.92	283.89	237.31	35.92	283.89	557.13
Service 3	215.53	21.78	35.92	227.12	237.31	35.92	227.12	500.35

$M_{railS1} = 21.78\ kip \cdot ft$ $M_{gS1} = 215.53\ kip \cdot ft$ $M_{wsS1} = 35.92\ kip \cdot ft$

$M_{LLIMS1} = 283.89\ kip \cdot ft$ $M_{TS3} = 500.35\ kip \cdot ft$ $M_{uSTR1} = 847.34\ kip \cdot ft$

$M_{TS1} := 557.13\ kip \cdot ft$

INTERIOR BEAM MOMENTS

INTERIOR BEAM Load Case	Mg (k-ft)	Mrail (int) (k-ft)	Mws (k-ft)	M(LL+IM) (k-ft)	M(DC) (k-ft)	M(WS) (k-ft)	M(LL+IM) (k-ft)2	Mtotal (k-ft)
Strength 1	269.41	40.84	53.88	450.84	310.25	53.88	450.84	814.98
Service 1	215.53	32.67	35.92	257.62	248.20	35.92	257.62	541.75
Service 3	215.53	32.67	35.92	206.10	248.20	35.92	206.10	490.22

EXTERIOR BEAM SHEAR

EXTERIOR BEAM SHEAR Load Case	Vg (k)	Vrail (ext) (k)	Vws (k)	V(LL+IM) (k)	V(DC) (k)	V(WS) (k)	V(LL+IM) (k)2	Vtotal (k)
Strength 1	24.49	2.48	4.90	86.01	26.97	4.90	86.01	117.88
Service 1	19.59	1.98	3.27	49.15	21.57	3.27	49.15	73.99
Service 3	19.59	1.98	3.27	39.32	21.57	3.27	39.32	64.16

$V_{uext} = 117.88\ kip$ $V_{TS1} := 73.99\ kip$

INTERIOR BEAM SHEAR

INTERIOR BEAM SHEAR Load Case	Vg (k)	Vrail (int) (k)	Vws (k)	V(LL+IM) (k)	V(DC) (k)	V(WS) (k)	V(LL+IM) (k)2	Vtotal (k)
Strength 1	24.49	3.71	4.90	71.44	28.20	4.90	71.44	104.55
Service 1	19.59	2.97	3.27	40.82	22.56	3.27	40.82	66.65
Service 3	19.59	2.97	3.27	32.66	22.56	3.27	32.66	58.49

$V_{uint} = 104.55\ kip$

Exterior Beams Control & the Interior Beams have a smaller section, Therefore check the maximum Exterior loads on the Interior beams.

CALDERWOOD ENGINEERING
222 RIVER ROAD
RICHMOND, ME 04357
PH. (207) 737-2007 FAX (207) 737-2008

Prestress Losses:

Min Concrete Cover per VTrans Structures Design Manual 5.1.2.6,
strands located 2.5" from bottom

Total number of prestressing strands $N_{ps} = 22$ $d_b = 0.6\ in$

Number of Strands in 1st Row $N_{strands1} := 18$

Location of strands $x_1 := 2.5\ in$

Clear Cover (to stirrups) $clr := x_1 - 0.5\ in - \frac{0.6\ in}{2} = 1.7\ in$

Number of Strands in 2nd Row $N_{strands2} := N_{ps} - N_{strands1} - 4 = 0$

$x_2 := x_1 + 2\ in = 4.5\ in$

Top Strands $N_{strands3} := N_{ps} - N_{strands1} - N_{strands2} = 4$

$x_3 := x_2 + 2 \cdot 5\ in = 14.5\ in$

$$y_{bs} := \frac{\left(N_{strands1} \cdot x_1 + N_{strands2} \cdot x_2 + N_{strands3} \cdot x_3\right)}{N_{ps}} = 4.682\ in$$

$e := y_b - y_{bs} = 4.318\ in$

$A_{ps} = 4.774\ in^2$ $A_g = 855\ in^2$ $I_x = 23085\ in^4$

$E_p := 28500\ ksi$ $M_g = 215.531\ kip \cdot ft$ $E_{ci} = 3834.254\ ksi$

Table 5.9.3.1: Stress limit for Low-Relax Strands immediately prior to transfer (fpbt) $f_{pbt} := 0.75 \cdot f_{pu} = 202.5\ ksi$

Sum of losses due to elastic shortening/extension at the time of prestress and/or external loads (ksi)

$$\Delta f_{pES} := \frac{\left(A_{ps} \cdot f_{pbt} \cdot \left(I_x + e^2 \cdot A_g\right) - e \cdot M_g \cdot A_g\right)}{\left(A_{ps} \cdot \left(I_x + e^2 \cdot A_g\right) + \frac{\left(A_g \cdot I_x \cdot E_{ci}\right)}{E_p}\right)} = 9.917\ ksi$$

(Equation Per AASHTO LRFD C5.9.5.3a-1)

prestress immediately prior to transfer $f_{pi} := 202.5\ ksi$

avg. annual ambient relative humidity (%) $H := 80$

(AASHTO LRFD Eq. 5.9.5.3-2) $\gamma_h := 1.7 - 0.01\ H = 0.9$

(5.9.5.3-3) $\gamma_{st} := \frac{5}{\left(1 + \frac{f'_{ci}}{ksi}\right)} = 1$

Estimate of relaxation loss, for low relax. strand $\Delta_{fpR} := 2.4\ ksi$

long term losses, shrinkage and creep: (AASHTO LRFD Eq. 5.9.5.3-1)

$$\Delta f_{pLT} := 10 \cdot \frac{\left(f_{pi} \cdot A_{ps}\right)}{A_g} \cdot \gamma_h \cdot \gamma_{st} + 12\ ksi \cdot \gamma_h \cdot \gamma_{st} + \Delta_{fpR} = 23.376\ ksi$$

Total Losses in Pretension members per Eq. 5.9.5.1-1) $\Delta f_{pT} := \Delta f_{pES} + \Delta f_{pLT} = 33.293\ ksi$

Stress in prestressing strands at service limit state after losses, $f_{pe} := f_{pi} - \Delta f_{pT} = 169.207\ ksi$

Check Service I (AASHTO LRFD 5.9.4.2): compression stresses, all limits in table 5.9.4.2.1-1 shall apply

Case 1: stress limit 0.45f'c (ksi) - Compute top fiber stresses -under permanent load
Ppe from:

$Srv1Limit := 0.45 \cdot f'_c = 2.7\ ksi$ $e = 4.318\ in$ $S_t = 2565.00\ in^3$ $S_b = 2565\ in^3$

$A_{ps} = 4.774\ in^2$

$P_{pe} := f_{pe} \cdot A_{ps} = 807.79\ kip$

Moment due to barrier for Service I $M_{railS1} = 261.36\ kip \cdot in$

Moment due to self-weight for Service I $M_{gS1} = 2586.36\ kip \cdot in$

Moment due to wear surface for Service I $M_{wsS1} = 431.04\ kip \cdot in$

$$f_{tg} := \frac{P_{pe}}{A_g} - \frac{P_{pe} \cdot e}{S_t} + \frac{(M_{gS1} + M_{railS1} + M_{wsS1})}{S_t}$$ $f_{tg} = 0.863\ ksi$ ft<2.7 ksi, OK

$$f_{bg} := \frac{P_{pe}}{A_g} + \frac{P_{pe} \cdot e}{S_b} - \frac{(M_{gS1} + M_{railS1} + M_{wsS1})}{S_b}$$ $f_{bg} = 1.026\ ksi$ fb<2.7 ksi, OK

Case 3: stress limit 0.60f'c (ksi) - Compute top fiber stresses -under prestress, permanent load, and transient loads

$$f_t := \frac{P_{pe}}{A_g} - \frac{P_{pe} \cdot e}{S_t} + \frac{(M_{gS1} + M_{railS1} + M_{wsS1} + M_{LLIMS1})}{S_t}$$ $f_t = 2.191\ ksi$ ft< 3.6ksi, OK

Check Service III (AASHTO LRFD 5.9.4.2.2): tension stresses, all limits in table 5.9.4.2.2-1 shall apply

Case 2: Severe corrosion, tensile stress limit (ksi) - Compute top fiber stresses -under permanent load

$Srv3Limit := -\left(0.0948 \cdot \sqrt{f'_c \cdot ksi}\right)$ $Srv3Limit = -0.232\ ksi$ (-) indiates tension

$$f_b := \frac{P_{pe}}{A_g} + \frac{P_{pe} \cdot e}{S_b} - \frac{M_{TS3}}{S_b}$$ $f_b = -0.036\ ksi$ OK for Service III

Check Strength I (AASHTO LRFD 5.7.3):

Mild Reinforcement for Strength 1 $N_s := 0$ $A_{s1} := 0.2\ in^2$ $A_s := N_s \cdot A_{s1} = 0\ in^2$ $d_s := h - 4.25\ in$

$f'_y := 60\ ksi$ $N'_s := 0$ $A'_{s1} := 0.2\ in^2$ $A'_s := A'_{s1} \cdot N'_s = 0\ in^2$

$D_s := 0.5\ in$ $d'_s := 2.5\ in + \frac{0.625}{2}\ in = 2.813\ in$

$A_{psStr1} := (N_{strands1} + N_{strands2}) \cdot A_{strand} = 3.906\ in^2$ (Conservatively Ignore Top Corner Strands)

$y_{bsStr1} := x_1 = 2.5\ in$

Grade 60 #5 bar: per 5.7.2.1.1 $f_{ys} := 60\ ksi$ $d_{ps} := h - y_{bsStr1} = 15.5\ in$

k for low relaxation strands (Table C5.7.3.1.1-1) $k := 0.28$ $f'_c = 6\ ksi$

beta1 not less than 0.65: $\beta_1 := 0.85 - 0.05 \cdot \left(\frac{f'_c}{ksi} - 4\right)$ $\beta_1 = 0.75$

for rectangular section behavior, (5.7.3.1.1-4)

$$c := \frac{A_{psStr1} \cdot f_{pu} + A_s \cdot f_{ys} - A'_s \cdot f_{ys}}{0.85 \cdot f'_c \cdot \beta_1 \cdot b + k \cdot A_{psStr1} \cdot \frac{f_{pu}}{d_{ps}}}$$ $c = 5.254\ in$

$a := \beta_1 \cdot c = 3.94\ in$

f's =f'y if c<3*d's and fy< or = 60ksi $c = 5.254\ in$ $d'_s = 2.813\ in$ $f_s := f_{ys}$

$$f'_s := \begin{cases} f'_y & \text{if } c < 3 \cdot d'_s \\ f'_y & \text{also if } f_{ys} < 60\ ksi \\ \text{"f's"} & \text{else} \end{cases} = 60\ ksi$$

for rectangular section subject to flexure about one axis, where approx. stress distribution in Art. 5.7.2.2 & where fpe> or = 0.5fpu, any P.S. stress (fps) may be taken as $f_{ps} := f_{pu} \cdot \left(1 - k \cdot \frac{c}{d_{ps}}\right)$ $f_{ps} = 244.38\ ksi$

$$M_n := A_{psStr1} \cdot f_{ps} \cdot \left(d_{ps} - \frac{a}{2}\right) + A_s \cdot f_s \cdot \left(d_s - \frac{a}{2}\right) - A'_s \cdot f'_s \cdot \left(d'_s - \frac{a}{2}\right)$$

AASHTO LRFD Equation 5.7.3.2.2-1 $M_n = 12914.672\ kip \cdot in$

phi = 1 for tension controlled prestressed sections $\phi M_n := M_n = 12914.672\ kip \cdot in$ > $M_{uSTR1} = 10168.08\ kip \cdot in$

CALDERWOOD ENGINEERING
222 RIVER ROAD
RICHMOND, ME 04357
PH. (207) 737-2007 FAX (207) 737-2008

Check Minimum Reinforcing: Per AASHTO LRFD 5.7.3.2.2, the amount of prestressed & nonprestressed tensile reinforcement shall be adequate to develop a factored flexural resistance, Mr is the min. of 1.33* factored moment required by applicable load combinations OR Mcr

$M_r := \phi M_n$ **phiMn is greater than Mu, therefore meets strength 1 requirements**

(5.7.3.3.2-1) $\gamma_3 := 1$ for prestressed concrete structures

$\gamma_1 := 1.6$ flex. cracking variability factor, 1.6 for other than segmental

$\gamma_2 := 1.1$ bonded tendons

$f_r := 0.24 \cdot \sqrt{f'_c \cdot ksi} = 0.588\ ksi$ modulus of rupture (Art. 5.4.2.6) for cracking moment

$$f_{cpe} := \frac{P_{pe}}{A_g} + \frac{P_{pe} \cdot e}{S_b} = 2.305\ ksi$$

$M_{cr} := \gamma_3 \cdot \langle \gamma_1 \cdot f_r + \gamma_2 \cdot f_{cpe} \rangle\ S_b = 8915.398\ (kip \cdot in)$

$FactoredMu := 1.33 \cdot M_{uSTR1} = 13523.546\ kip \cdot in$ **> Mcr, therefore Mcr controls**

$CheckminAs := min\langle M_{cr}, FactoredMu \rangle = 8915.398\ kip \cdot in$

$M_r = 12914.672\ kip \cdot in$ **Mr>Mcr, OK**

CALDERWOOD ENGINEERING
222 RIVER ROAD
RICHMOND, ME 04357
PH. (207) 737-2007 FAX (207) 737-2008

Stresses at Transfer, Debonding of Strands $N_{ps} = 22$

4 Strands debonded for 7ft $N_{psdebond} := 4$ $\frac{N_{psdebond}}{N_{ps}} = 0.182$ <0.25 OK

Development length: fpe, fps @ Ld $f_{ps} = 244.376\ ksi$ $f_{pe} = 169.207\ ksi$

$K := 1.0$ $d_b = 0.6\ in$

$A_{psdebond} := (N_{ps} - N_{psdebond}) \cdot A_{strand} = 3.906\ in^2$

$N_{strands1debond} := N_{strands1} - N_{psdebond} = 14$ $x_1 := 2.5\ in$

$N_{strands2debond} := N_{strands2} = 0$ $x_2 := 0\ in$

$N_{strands3debond} := N_{ps} - N_{strands1debond} - N_{psdebond} = 4$ $x_3 = 14.5\ in$

$$y_{bsdebond} := \frac{(N_{strands1debond} \cdot x_1 + N_{strands2debond} \cdot x_2 + N_{strands3debond} \cdot x_3)}{(N_{strands1debond} + N_{strands2debond} + N_{strands3debond})} = 5.167\ in$$

$e_{debond} := y_b - y_{bsdebond} = 3.833\ in$

Elastic losses (defined above) $\Delta f_{pES} = 9.917\ ksi$

Transfer length $l_{trans} := 60 \cdot d_b = 36\ in$

Total beam length $L_{total} = 46.5\ ft$ $x := l_{trans}$

Moment @ transfer length (x) due to self-weight $M_{gtrans} := \frac{w_g \cdot x}{2} \cdot (L_{total} - x)$ $M_{gtrans} = 697.359\ kip \cdot in$

Stress at Transfer: $P_{trans} := (202.5\ ksi - \Delta f_{pES}) \cdot A_{psdebond}$ $P_{trans} = 752.23\ kip$

$$f_{ttrans} := \frac{P_{trans}}{A_g} - \frac{P_{trans} \cdot e_{debond} \cdot y_t}{I_x} + \frac{M_{gtrans} \cdot y_t}{I_x}$$ $f_{ttrans} = 0.027\ ksi$ (-) indicates tension

$$f_{btrans} := \frac{P_{trans}}{A_g} + \frac{P_{trans} \cdot e_{debond} \cdot y_b}{I_x} - \frac{M_{gtrans} \cdot y_b}{I_x}$$ $f_{btrans} = 1.732\ ksi$ compression

CALDERWOOD ENGINEERING
222 RIVER ROAD
RICHMOND, ME 04357
PH. (207) 737-2007 FAX (207) 737-2008

$f'_{ci} = 4000$ psi

Stress Limits: 5.9.4

For temporary stresses before losses (5.9.4.1)

$f_{Callow} := 0.60 \cdot f'_{ci}$ $\quad f_{Callow} = 2.4$ ksi

Compression (5.9.4.1.1): for pretensioned and post-tensioned concrete components, inlcuding segmentally constructed bridges

$$\text{Compression@Transfer} := \begin{cases} \text{"OK"} & \text{if } f_{btrans} \le f_{Callow} \\ \text{"NG"} & \text{else} \end{cases} = \text{"OK"}$$

Tension (5.9.4.1.2) All limits in table 5.9.4.1.2-1 shall apply

For other than segmentally constructed bridges, in areas other than precompressed zone without bonded reinforcement

$f_{Tallow} := -0.0948 \cdot \sqrt{f'_{ci} \cdot \text{ksi}} = -0.19$ ksi

$$\text{Tension@Transfer} := \begin{cases} \text{"OK"} & \text{if } f_{ttrans} \ge f_{Tallow} \\ \text{"NG, check with bonded"} & \text{else} \end{cases}$$

$\text{Tension@Transfer} = \text{"OK"}$

$f_{Tallowbond} := -0.24 \cdot \sqrt{f'_{ci} \cdot \text{ksi}} = -0.48$ ksi

$$\text{Tension@TransferBonded} := \begin{cases} \text{"OK"} & \text{if } f_{ttrans} \ge f_{Tallowbond} \\ \text{"NG"} & \text{else} \end{cases} = \text{"OK"}$$

CALDERWOOD ENGINEERING
222 RIVER ROAD
RICHMOND, ME 04357
PH. (207) 737-2007 FAX (207) 737-2008

Check Stress @ Transfer @ Debond + Trans Length

$l_{debond} := l_{trans} + 7\ ft = 10\ ft$ $\quad L_{total} = 46.5\ ft$ $\quad e = 4.318\ in$

Moment @ transfer length (x) due to self-weight $\quad M_{gdebond} := \frac{w_g \cdot l_{debond}}{2} \cdot (L_{total} - l_{debond})$ $\quad M_{gdebond} = 1950.469\ kip \cdot in$

Stress at Transfer: $\quad P_{trans} := (202.5\ ksi - \Delta f_{pES}) \cdot A_{ps}$ $\quad P_{trans} = 919.393\ kip$

$A_{ps} = 4.774\ in^2$

$$f_{tdebond} := \frac{P_{trans}}{A_g} - \frac{P_{trans} \cdot e}{S_t} + \frac{M_{gdebond}}{S_t} \qquad f_{tdebond} = 0.288\ ksi \quad \text{compression}$$

$$f_{bdebond} := \frac{P_{trans}}{A_g} + \frac{P_{trans} \cdot e}{S_b} - \frac{M_{gdebond}}{S_b} \qquad f_{bdebond} = 1.863\ ksi \quad \text{compression}$$

Stress Limits: 5.9.4

```
Compression@Transfer := if f_bdebond ≤ f_Callow | = "OK"
                        || "OK"
                        else
                        || "NG"

Tension@Transfer := if f_tdebond ≥ f_Tallow | = "OK"
                    || "OK"
                    else
                    || "NG, check with bonded"
```

Check at Midspan

$M_{gbeam} := M_g = 215.531\ kip \cdot ft$ $\quad$ at midspan, full beam length

$$f_{tmid} := \frac{P_{trans}}{A_g} - \frac{P_{trans} \cdot e}{S_t} + \frac{M_{gbeam}}{S_t} \qquad f_{tmid} = 0.536\ ksi \quad \text{compression, <2.4 ksi } \textbf{OK}$$

$$f_{bmid} := \frac{P_{trans}}{A_g} + \frac{P_{trans} \cdot e}{S_b} - \frac{M_{gbeam}}{S_b} \qquad f_{bmid} = 1.615\ ksi \quad \text{compression, <2.4 ksi } \textbf{OK}$$

```
Compression@TransferMid := if f_bmid ≤ f_Callow | = "OK"
                           || "OK"
                           else
                           || "NG"

Tension@TransferMid := if f_tmid ≥ f_Tallow | = "OK"
                       || "OK"
                       else
                       || "NG"
```

CALDERWOOD ENGINEERING
222 RIVER ROAD
RICHMOND, ME 04357
PH. (207) 737-2007 FAX (207) 737-2008

Shear Design

Check critical section (near supports) dv (5.8.3.2) $V_{uext} = 117.88$ kip

Subscript "1" Denotes property @ section of critial shear @ dv from CL Bearing

$f_{ys} = 60$ ksi $y_{bs1} := y_{bsdebond} = 5.167$ in

$d_{ps1} := h - y_{bs1} = 12.833$ in

$k = 0.28$ $\beta_1 = 0.75$

$f'_c = 6$ ksi $A_{ps1} := A_{psdebond} = 3.906$ in^2

for rectangular section behavior, (5.7.3.1.1-4)

$b = 47.5$ in

$$c_1 := \frac{A_{ps1} \cdot f_{pu} + A_s \cdot f_{ys} - A'_s \cdot f_{ys}}{0.85 \cdot f'_c \cdot \beta_1 \cdot b + k \cdot A_{ps1} \cdot \frac{f_{pu}}{d_{ps1}}} = 5.152 \text{ in}$$

$a_1 := \beta_1 \cdot c_1 = 3.864$ in $b_{v1} := b - 2 \cdot t_{shearkey} = 46$ in (Solid Section)

$$f_{ps1} := f_{pu} \cdot \left(1 - k \cdot \frac{c_1}{d_{ps1}}\right) \qquad f_{ps1} = 239.65 \text{ ksi}$$

$$M_{n1} := A_{ps1} \cdot f_{ps1} \cdot \left(d_{ps1} - \frac{a_1}{2}\right) + A_s \cdot f_s \cdot \left(d_s - \frac{a}{2}\right) - A'_s \cdot f'_s \cdot \left(d'_s - \frac{a}{2}\right) = 850.366 \text{ ft} \cdot \text{kip}$$

$$M_{n1} = 10204.388 \text{ kip} \cdot \text{in}$$

Equation 5.8.2.9-2

$$d_{e1} := \frac{A_{ps1} \cdot f_{ps1} \cdot d_{ps1} + A_s \cdot f_{ys} \cdot d_s}{A_{ps1} \cdot f_{ps1} + A_s \cdot f_{ys}} = 12.833 \text{ in}$$

C5.8.2.9-1

$$d_v := \frac{M_{n1}}{(A_s \cdot f_{ys} + A_{ps1} \cdot f_{ps1})} \qquad d_v = 10.901 \text{ in}$$

$$d_{v1} := \max(d_v, 0.9 \cdot d_{e1}, 0.72 \cdot h) \qquad d_{v1} = 12.96 \text{ in}$$

Since bearing area not yet determined, conservatively assume to be zero for determining critical section for shear. Location of critical shear is dv.

$V_{uext} = 117.88$ kip

CALDERWOOD ENGINEERING
222 RIVER ROAD
RICHMOND, ME 04357
PH. (207) 737-2007 FAX (207) 737-2008

Calculate Shear @ 12.96 in from Centerline of bearing for an Exterior beam

$X := 12.96\ in$ $\quad w_{lane} := 0.64\ \frac{kip}{ft}$ $\quad w_g = 0.891\ \frac{kip}{ft}$ $\quad w_{ws} = 0.148\ \frac{kip}{ft}$

$V_{truck@12.96} := 56.7\ kip$ $\quad V_{lane@12.96} := w_{lane} \cdot \left(\frac{L_{bear}}{2} - X\right) = 13.389\ kip$

Beam Self Wt $\quad V_{g@12.96} := w_g \cdot \left(\frac{L_{bear}}{2} - X\right) = 18.632\ kip$

Wear Surface $\quad V_{ws@12.96} := w_{ws} \cdot \left(\frac{L_{bear}}{2} - X\right) = 3.105\ kip$

Rail Exterior Beam $\quad V_{bext@12.96} := w_{bext} \cdot \left(\frac{L_{bear}}{2} - X\right) = 2.824\ kip$

$$V_{u@12.96in} := 1.25 \cdot \left(V_{bext@12.96} + V_{g@12.96}\right) + 1.5 \cdot V_{ws@12.96} + 1.75 \cdot g_{vext} \cdot \left(1.33 \cdot V_{truck@12.96} + V_{lane@12.96}\right)$$

$V_{u@12.96in} = 116.782\ kip$ $\quad < \quad$ $V_{uext} = 117.88\ kip$

Therefore, use $\quad V_{u1} := V_{uext} = 117.88\ kip$

per 5.5.4.2 $\quad \phi := 0.9$

$V_p := 0$ when using simplified method, per(5.8.2.4) $\quad v_{u1} := \frac{V_{u1}}{\phi \cdot b_{v1} \cdot d_{v1}} = 0.22\ ksi$

5.8.3.4.2 General Procedure

Parameters beta and theta Table B5.2.1, values of theta and beta for sections with transverse reinforcement

Appendix B5 - General Procedue for Shear Design with Tables

Table B5.2-1—Values of θ and β for Sections with Transverse Reinforcement

$\frac{v_u}{f'_c}$	$\varepsilon_x \times 1{,}000$								
	≤−0.20	≤−0.10	≤−0.05	≤0	≤0.125	≤0.25	≤0.50	≤0.75	≤1.00
≤0.075	22.3 6.32	20.4 4.75	21.0 4.10	21.8 3.75	24.3 3.24	26.6 2.94	30.5 2.59	33.7 2.38	36.4 2.23
≤0.100	18.1 3.79	20.4 3.38	21.4 3.24	22.5 3.14	24.9 2.91	27.1 2.75	30.8 2.50	34.0 2.32	36.7 2.18
≤0.125	19.9 3.18	21.9 2.99	22.8 2.94	23.7 2.87	25.9 2.74	27.9 2.62	31.4 2.42	34.4 2.26	37.0 2.13
≤0.150	21.6 2.88	23.3 2.79	24.2 2.78	25.0 2.72	26.9 2.60	28.8 2.52	32.1 2.36	34.9 2.21	37.3 2.08
≤0.175	23.2 2.73	24.7 2.66	25.5 2.65	26.2 2.60	28.0 2.52	29.7 2.44	32.7 2.28	35.2 2.14	36.8 1.96
≤0.200	24.7 2.63	26.1 2.59	26.7 2.52	27.4 2.51	29.0 2.43	30.6 2.37	32.8 2.14	34.5 1.94	36.1 1.79
≤0.225	26.1 2.53	27.3 2.45	27.9 2.42	28.5 2.40	30.0 2.34	30.8 2.14	32.3 1.86	34.0 1.73	35.7 1.64
≤0.250	27.5 2.39	28.6 2.39	29.1 2.33	29.7 2.33	30.6 2.12	31.3 1.93	32.8 1.70	34.3 1.58	35.8 1.50

$$\frac{V_{u1}}{f'_c} = 0.037$$

Update theta after calculating strain, recalculate strain, check table B5.2.1 $\theta_1 := 21.8\ \text{deg}$ $N_u := 0\ \text{kip}$ $E_s := 29000\ \text{ksi}$

per B5.2-3 definition of fpo $f_{po} := 0.7 \cdot f_{pu}$ $f_{po} = 189\ \text{ksi}$

Within the transfer lengh, fpo varies linearly from zero at the location where the bond between the strands and concrete reaches its full value at the end of the transfer length. Calculate fpo at dv from the Centerline of bearing

$$f_{po1} := f_{po} \cdot \frac{d_{v1}}{l_{trans}} = 68.04\ \text{ksi}$$

Section contains at least the minimum transverse reinforcement as specified in Art. 5.8.2.5 (B5.2-1)

$$V_{uext} \cdot d_v = 107.087\ \text{kip} \cdot \text{ft}$$

$$M_{u1} := (V_{u1} - V_p) \cdot d_{v1} = 127.31\ \text{kip} \cdot \text{ft}$$

Mu shall not be taken as less than Vu*dv.

$$\varepsilon_{xB521} := \frac{\left(\left(\frac{|M_{u1}|}{d_{v1}}\right) + 0.5 \cdot N_u + 0.5 \cdot |V_{u1} - V_p| \cot(\theta_1) - A_{ps1} \cdot f_{po1}\right)}{2 \cdot (E_s \cdot A_s + E_{ps} \cdot A_{ps1})} = 0$$

$$\varepsilon_{xB521} \cdot 1000 = -0.002$$

CALDERWOOD ENGINEERING
222 RIVER ROAD
RICHMOND, ME 04357
PH. (207) 737-2007 FAX (207) 737-2008

If values from B5.2-1 is negative, the strain shall be taken as,

$$\varepsilon_{xB522B} := \frac{\left(\left(\frac{|M_{u1}|}{d_{v1}}\right) + 0.5 \cdot N_u + 0.5 \cdot |V_{u1} - V_p| \cot(\theta_1) - A_{ps1} \cdot f_{po1}\right)}{2 \cdot \left(E_c \cdot \frac{A_g}{2} + E_s \cdot A_s + E_{ps} \cdot A_{ps1}\right)} = 0.000000$$

$$\varepsilon_{xB522B} \cdot 1000 = -0.0001$$

$$\varepsilon_{xLimit} := -0.2 \cdot 10^{-3} = -0.0002$$

$$\varepsilon_{x1} := \max\left(\begin{array}{l} \text{if } 0 \le \varepsilon_{xB521} \le 0.001 \\ \quad \varepsilon_{xB521} \\ \text{else} \\ \quad \varepsilon_{xB522B} \end{array}, \varepsilon_{xLimit}\right) = 0.000000$$

$f'_c = 6$ ksi

$\varepsilon_{x1} \cdot 1000 = -0.0001$

per Table B5.2-1 $\frac{v_{u1}}{f'_c} = 0.037$ $\theta_{uv} := \theta_1 = 21.8$ deg $\beta_{uv1} := 3.75$

concrete shear contribution Vc

(5.8.3.3-3) $V_{c1} := 0.0316 \cdot \beta_{uv1} \cdot \sqrt{f'_c \cdot \text{ksi}} \cdot b_{v1} \cdot d_{v1}$ $V_{c1} = 173.044$ kip

Required Transverse reinforcement at supports per 5.8.2.4, if Vu > .5phi*Vc, then additional reinforcement is needed

(5.8.2.4-1) $\phi_v := 0.9$ $V_{u1} = 117.88$ kip > $0.5 \cdot \phi \cdot (V_{c1} + V_p) = 77.87$ kip

Transverse Reinforcement required.

$V_{sreq'd} := \frac{V_{u1}}{\phi_v} - V_{c1} = -42.066$ kip $F_y := 60$ ksi $S_{reinf.} := 6$ in

$A_{vreq'd} := \frac{(V_{sreq'd} \cdot S_{reinf.})}{F_y \cdot d_{v1} \cdot \cot(\theta_1)} = -0.13$ in^2

Negative Area of Steel indicates that the minimum area of steel required.

Try, 1 #4 stirrups @ 6" spacing

$A_{\#4} := 0.2\ in^2$ $\alpha := 90$

$A_{v1} := A_{\#4} \cdot 2 = 0.4\ in^2$ meets min area (Avmin)

$$V_{s1} := \frac{A_{v1} \cdot F_y \cdot d_{v1} \cdot \cot(\theta_1) \cdot \sin(\alpha)}{S_{reinf.}} \qquad V_{s1} = 115.87\ kip$$

$V_n := V_{c1} + V_{s1} + V_p = 288.914\ kip$

$V_{r1} := \phi \cdot V_n = 260.023\ kip$

$$\frac{V_u}{\phi} \le V_n$$

CheckShear := if $V_{r1} > V_{u1}$
"OK"
else
"NG"

CheckShear = "OK"

use, (1) #4 stirrups @ 6" spacing

Max transverse spacing

$f'_c = 6\ ksi$ $v_{u1} = 0.22\ ksi$ $b_{v1} = 46\ in$ $0.125\ f'_c = 0.75\ ksi$

$d_{v1} = 12.96\ in$

s_{max} := if $v_{u1} < (0.125 \cdot f'_c)$ $= 10.37\ in$
$0.8 \cdot d_{v1}$
else if $v_{u1} \ge 0.125 \cdot f'_c$
$0.4 \cdot d_{v1}$

0.8dv < or = 24 in

0.4dv < or = 12 in

$6\ in < 10.37\ in$ **OK**

Min transverse reinforcement

$$A_{vmin} := 0.0316 \cdot \sqrt{f'_c \cdot ksi} \cdot \frac{b_{v1} \cdot S_{reinf.}}{F_y} = 0.356\ in^2$$

$A_{v1} = 0.4\ in^2$ Av>Avmin, **OK**

CALDERWOOD ENGINEERING
222 RIVER ROAD
RICHMOND, ME 04357
PH. (207) 737-2007 FAX (207) 737-2008

Try changing spacing to 12" @ 12' past the centerline of bearing

Subscript "2" Denotes property @ this location $X_2 := 12\ ft$

Conservatively Ignore the (4) debonded strands since they are only partially developed at this location. Therefore, use same prestressing properties as CL bearing.

$A_{ps2} := A_{ps1} = 3.906\ in^2$ $d_{ps2} := d_{ps1} = 12.833\ in$

$f_{ps2} := f_{ps1} = 239.649\ ksi$ $M_{n2} := M_{n1} = 850.366\ kip \cdot ft$

$d_{v2} := d_{v1} = 12.96\ in$

$b_{v2} := b - 2 \cdot t_{shearkey} = 46\ in$

Calculate Shear @ 12ft from Centerline of bearing for an Exterior beam

@12 ft $V_{truck2} := 38.7\ kip$ $V_{lane2} := w_{lane} \cdot \left(\frac{L_{bear}}{2} - X_2\right) = 6.4\ kip$

Beam Self Wt $V_{g2} := w_g \cdot \left(\frac{L_{bear}}{2} - X_2\right) = 8.906\ kip$

Wear Surface $V_{ws2} := w_{ws} \cdot \left(\frac{L_{bear}}{2} - X_2\right) = 1.484\ kip$

Rail Exterior Beam $V_{bext2} := w_{bext} \cdot \left(\frac{L_{bear}}{2} - X_2\right) = 1.35\ kip$

$V_{u2} := 1.25 \cdot \langle V_{bext2} + V_{g2} \rangle + 1.5 \cdot V_{ws2} + 1.75 \cdot g_{vext} \cdot \langle 1.33 \cdot V_{truck2} + V_{lane2} \rangle$

$V_{u2} = 70.639\ kip$

CALDERWOOD ENGINEERING
222 RIVER ROAD
RICHMOND, ME 04357
PH. (207) 737-2007 FAX (207) 737-2008

Calculate Moment @ 12ft from Centerline of bearing for an Exterior beam

$M_{truck2} := 445.1\ kip \cdot ft$

$M_{lane2} := \frac{\langle w_{lane} \cdot X_2 \rangle}{2} \cdot \langle L_{bear} - X_2 \rangle = 122.88\ ft \cdot kip$

Beam Self Wt

$M_{g2} := \frac{\langle w_g \cdot X_2 \rangle}{2} \cdot \langle L_{bear} - X_2 \rangle = 171\ ft \cdot kip$

Wear Surface

$M_{ws2} := \frac{\langle w_{ws} \cdot X_2 \rangle}{2} \cdot \langle L_{bear} - X_2 \rangle = 28.5\ ft \cdot kip$

Rail Exterior Beam

$M_{bext2} := \frac{\langle w_{bext} \cdot X_2 \rangle}{2} \cdot \langle L_{bear} - X_2 \rangle = 25.92\ ft \cdot kip$

$$M_{u2} := 1.25 \cdot \langle M_{bext2} + M_{g2} \rangle + 1.5 \cdot M_{ws2} + 1.75 \cdot g_{vext} \cdot \langle 1.33 \cdot M_{truck2} + M_{lane2} \rangle$$

$M_{u2} = 975.617\ ft \cdot kip$

$v_{u2} := \frac{V_{u2}}{\phi \cdot b_{v2} \cdot d_{v2}} = 0.132\ ksi$

$\frac{v_{u2}}{f'_c} = 0.022$

5.8.3.4.2 General Procedure

Parameters beta and theta Table B5.2.1, values of theta and beta for sections with transverse reinforcement

Appendix B5 - General Procedure for Shear Design with Tables

Update theta after calculating strain, recalculate strain, check table B5.2.1 $\theta_2 := 21.0$ $N_u = 0\ kip$ $E_s = 29000\ ksi$

At 8' from centerline of bearing (16) Undebonded strands are fully bonded, the (4) debonded strands are not fully bonded.

$N_{strands1} := 16$ $f_{poa} := f_{po} = 189\ ksi$ $A_{psa} := N_{strands1} \cdot A_{strand} = 3.472\ in^2$

$N_{strands2} := N_{ps} - N_{strands1} = 6$ $f_{pob} := f_{po} \cdot \frac{12\ in}{l_{trans}} = 63\ ksi$ $A_{psb} := N_{strands2} \cdot A_{strand} = 1.302\ in^2$

Section contains at least the minimum transverse reinforcement as specified in Art. 5.8.2.5 (B5.2-1)

$$\varepsilon_{xB521} := \frac{\left(\frac{|M_{u2}|}{d_{v2}}\right) + 0.5 \cdot N_u + 0.5 \cdot |V_{u2} - V_p| \cot(\theta_2) - (A_{psa} \cdot f_{poa} + A_{psa} \cdot f_{poa})}{2 \cdot (E_s \cdot A_s + E_{ps} \cdot (A_{psa} + A_{psa}))} = -0.0011$$

$$\varepsilon_{xB521} \cdot 1000 = -1.092$$

If values from B5.2-1 is negative, the strain shall be taken as,

$$\varepsilon_{xB522B} := \frac{\left(\left(\frac{|M_{u2}|}{d_{v2}}\right) + 0.5 \cdot N_u + 0.5 \cdot |V_{u2} - V_p| \cot(\theta_2) - (A_{psa} \cdot f_{poa} + A_{psa} \cdot f_{poa})\right)}{2 \cdot \left(E_c \cdot \frac{A_g}{2} + E_s \cdot A_s + E_{ps} \cdot (A_{psa} + A_{psa})\right)} = -0.0001$$

$\varepsilon_{xB522B} \cdot 1000 = -0.098$ $\varepsilon_{xLimit} = -0.0002$

$$\varepsilon_{x2} := \max\left(\begin{array}{l} \text{if } 0 \le \varepsilon_{xB521} \le 0.001 \\ \quad \varepsilon_{xB521} \\ \text{else} \\ \quad \varepsilon_{xB522B} \end{array}, \varepsilon_{xLimit}\right) = -0.000098$$

$f'_c = 6\ ksi$ $\varepsilon_{x2} \cdot 1000 = -0.098$

per Table B5.2-1 $\frac{v_{u2}}{f'_c} = 0.022$ $\theta_{uv2} := \theta_2 = 21$ $\beta_{uv2} := 4.10$

CALDERWOOD ENGINEERING
222 RIVER ROAD
RICHMOND, ME 04357
PH. (207) 737-2007 FAX (207) 737-2008

Concrete shear contribution Vc

(5.8.3.3-3) $V_{c2} := 0.0316 \cdot \beta_{uv2} \cdot \sqrt{f'_c \cdot ksi} \cdot b_{v2} \cdot d_v$ $V_{c2} = 159.141\ kip$

Required Transverse reinforcement at supports per 5.8.2.4, if Vu > .5phi*Vc, then additional reinforcement is needed

(5.8.2.4-1) $\phi_v := 0.9$ $V_{u2} = 70.639\ kip$ < $0.5 \cdot \phi \cdot (V_{c2} + V_p) = 71.614\ kip$

Transverse Reinforcement not required.
Max spacing does not apply.

$S_{reinf.} := 12\ in$

$V_{sreq'd2} := \frac{V_{u2}}{\phi_v} - V_{c2} = -80.653\ kip$

$F_y := 60\ ksi$

$A_{vreq'd2} := \frac{(V_{sreq'd2} \cdot S_{reinf.})}{F_y \cdot d_{v2} \cdot \cot(\theta_2)} = 1.901\ in^2$

Negative value indicates steel required, no steel required.

(1) #4 stirrup @ 12" spacing starting 12' from CL bearing.

$A_{\#4} := 0.2\ in^2$ $\alpha := 90$

$A_{v2} := A_{\#4} \cdot 2 = 0.4\ in^2$

meets min area (Avmin) 2 vertical legs of stirrups per S =12in

$V_{s2} := \frac{A_{v2} \cdot F_y \cdot d_{v2} \cdot \cot(\theta_2) \cdot \sin(\alpha)}{S_{reinf.}}$ $V_{s2} = -15.17\ kip$

$V_{n2} := V_{c2} + V_{s2} + V_p = 143.971\ kip$

$V_{r2} := \phi \cdot V_{n2} = 129.574\ kip$ $V_{u2} = 70.639\ kip$

$\frac{V_u}{\phi} \le V_n$

CheckShear := if $V_{r2} > V_{u2}$
"OK"
else
"NG"

CheckShear = "OK"

Ok to change spacing to 12" @ 12' from Centerline of Bearing.

CALDERWOOD ENGINEERING
222 RIVER ROAD
RICHMOND, ME 04357
PH. (207) 737-2007 FAX (207) 737-2008

Check Longitudinal Reinforcement @ Support per 5.8.3.5

5.8.3.5-1 $A_{ps1} = 3.906\ in^2$ $d_{ps1} = 12.833\ in$ $A_s = 0\ ft^2$

$f_{ps1} = 239.649\ ksi$

$Long_{reinf1} := A_{ps1} \cdot f_{ps1} + A_s \cdot f_{ys} = 936.071\ kip$

$\phi_f := 1.0$ $\phi_v := 0.9$ $M_{uvsprt} := 0\ kip \cdot ft$ Use actual Moment @ Support

$d_{v1} = 12.96\ in$ $V_{s1} = 115.87\ kip$ $\theta_1 = 21.8\ deg$ $V_{u1} = 117.88\ kip$

$$Limit_1 := \frac{|M_{uvsprt}|}{d_{v1} \cdot \phi_f} + \left(\left| \frac{V_{u1}}{\phi_v} - V_p \right| - 0.5 \cdot V_{s1} \right) \cdot \cot(\theta_1) = 182.62\ kip$$

$$CheckLong_1 := \begin{cases} \text{"OK"} & \text{if } Long_{reinf1} > Limit_1 \\ \text{"NG"} & \text{else} \end{cases}$$

$CheckLong_1 = \text{"OK"}$

CALDERWOOD ENGINEERING
222 RIVER ROAD
RICHMOND, ME 04357
PH. (207) 737-2007 FAX (207) 737-2008

Check Longitudinal Reinforcement @ Midspan

$A_{ps} = 4.774\ in^2$ $\quad d_{ps} = 15.5\ in$ $\quad f_{ps} = 244.376\ ksi$ $\quad b_{vmid} := b_{v1} = 46\ in$

$M_{uSTR1} = 847.34\ kip \cdot ft$ $\quad \phi M_n = 1076.223\ kip \cdot ft$

$$d_e := \frac{A_{ps} \cdot f_{ps} \cdot d_{ps} + A_s \cdot f_{ys} \cdot d_s}{A_{ps} \cdot f_{ps} + A_s \cdot f_{ys}} = 15.5\ in$$ (Same as dps)

$$d_v := \frac{\phi M_n}{\left(A_s \cdot f_{ys} + A_{ps} \cdot f_{ps}\right)}$$ $\quad d_v = 11.07\ in$

$d_{vmid} := \max\left(d_v, 0.9 \cdot d_e, 0.72 \cdot h\right)$ $\quad d_{vmid} = 13.95\ in$

$Long_{reinfmid} := A_{ps} \cdot f_{ps} + A_s \cdot f_{ys} = 1166.649\ kip$

$V_{truckmid} := 21.8\ kip$ Unfactored, Undistributed

$\gamma_{LL} = 1.75$ $\quad I.M. = 1.33$ $\quad g_v = 0.549$

$V_{umid} := V_{truckmid} \cdot \gamma_{LL} \cdot I.M. \cdot g_v = 27.852\ kip$

$d_{vmid} = 13.95\ in$ $\quad v_{umid} := \dfrac{V_{umid}}{\phi \cdot b_{vmid} \cdot d_{vmid}} = 0.048\ ksi$

Section contains at least the minimum transverse reinforcement as specified in Art. 5.8.2.5 (B5.2-1) Try $\theta_{mid} := 22.3\ deg$

$$\varepsilon_{xB521} := \frac{\left(\left(\frac{\left|M_{uSTR1}\right|}{d_{vmid}}\right) + 0.5 \cdot N_u + 0.5 \cdot \left|V_{umid} - V_p\right| \cot\left(\theta_{mid}\right) - \left(A_{ps} \cdot f_{po}\right)\right)}{2 \cdot \left(E_s \cdot A_s + E_{ps} \cdot A_{ps}\right)} = -0.0005$$

$\varepsilon_{xB521} \cdot 1000 = -0.512$ $\quad \varepsilon_{Limit} := 3.0 \cdot 10^{-3} = 0.003$

$\varepsilon_{xmid} := min\left(\varepsilon_{xB521}, \varepsilon_{Limit}\right) = -0.000512$ $\quad \varepsilon_{xmid} \cdot 1000 = -0.512$

per Table B5.2-1 $\quad \dfrac{v_{umid}}{f'_c} = 0.008$ $\quad \theta_{uvmid} := \theta_{mid}$ $\quad \beta_{uvmid} := 6.32$

CALDERWOOD ENGINEERING
222 RIVER ROAD
RICHMOND, ME 04357
PH. (207) 737-2007 FAX (207) 737-2008

$A_{vmid} := A_{v1} = 0.4\ in^2$

$$V_{smid} := \frac{A_{vmid} \cdot F_y \cdot d_{vmid} \cdot \cot(\theta_{mid}) \cdot \sin(\alpha)}{S_{reinf.}} = 60.816\ kip$$

$$Limit_{mid} := \frac{|M_{uSTR1}|}{d_{vmid} \cdot \phi_f} + \left(\left| \frac{V_{umid}}{\phi_v} - V_p \right| - 0.5 \cdot V_{smid} \right) \cdot \cot(\theta_{mid}) = 730.209\ kip$$

$$CheckLong_{mid} := \begin{cases} \text{"OK"} & \text{if } Long_{reinfmid} > Limit_{mid} \\ \text{"NG"} & \text{else} \end{cases}$$

$CheckLong_{mid} = \text{"OK"}$

CALDERWOOD ENGINEERING
222 RIVER ROAD
RICHMOND, ME 04357
PH. (207) 737-2007 FAX (207) 737-2008

Check Pretensioned Anchorage Zone 5.10.10

$A_{ps} = 4.774\ in^2$

$F_p := f_{pi} \cdot A_{ps} = 966.735\ kip$

bursting resistance, Pr, should not be less than 4.0% of Ppi

$P_r := 0.04 \cdot F_p = 38.669\ kip$

$f_{sallow} := 20\ ksi$

Per AASHTO LRFD 5.10.10-1 on splitting resistance in pretensioned anchorage zones, for pretensioned solid slabs, As, shall be taken as the total area of the horizontal reinforcement located within a distance h/4 from the end of the member, where h is the width of the member.

$A_{sburst} := \frac{P_r}{f_{sallow}} = 1.933\ in^2$

$h_{split} := b = 47.5\ in$

$fromend := \frac{h_{split}}{4} = 11.875\ in$

dimension from end of beam in direction that splitting is being evaluated.

Add additional #4 stirrups at ends to meet required burst resistance

$A_{sburst} = 1.933\ in^2$

$fromend = 11.875\ in$

$A_{steelend} := 3 \cdot (2 \cdot 2 \cdot A_{\#4}) = 2.4\ in^2$

End of beam stirrups: (3) sets of two #4 stirrups starting 3" from beam end, spaced @ 3"

required steel: $A_{sburst} = 1.933\ in^2$

actual steel: $A_{steelend} = 2.4\ in^2$

Start first set 3" from beam end, space 3" apart to CL bearing where stirrup spacing changes.

CALDERWOOD ENGINEERING
222 RIVER ROAD
RICHMOND, ME 04357
PH. (207) 737-2007 FAX (207) 737-2008

Check Fatigue

$M_g = 215.531\ kip \cdot ft$

$M_{ws} = 35.922\ kip \cdot ft$

$M_{bext} = 32.67\ kip \cdot ft$

$M_{uFat1} := 385.6\ kip \cdot ft$ (Unfactored, Undistributed)

Fatigue 1

$\gamma_{LLFat1} := 1.5$ $\gamma_{DCFat1} := 1.0$ $\gamma_{DWFat1} := 1.0$ $I.M._{Fat1} := 1.15$ $g_m = 0.335$

$M_d := M_g + M_{ws} + M_{bext} = 284.123\ kip \cdot ft$

$M_{LL} := M_{uFat1} \cdot \gamma_{LLFat1} \cdot I.M._{Fat1} \cdot g_m = 222.56\ kip \cdot ft$

$P_{pe} = 807.795\ kip$ $A_g = 855\ in^2$ $e = 4.318\ in$ $S_t = 2565\ in^3$

$S_b = 2565\ in^3$

$$f_{tFat1} := \frac{1}{2}\left(\frac{P_{pe}}{A_g} - \frac{P_{pe} \cdot e}{S_t} + \frac{M_d}{S_t}\right) + \frac{M_{LL}}{S_t} = 1.498\ ksi$$ (Compression, less than allowable OK)

$F_{callow} := 0.4 \cdot f'_c = 2.4\ ksi$

$$f_{bFat1} := \frac{P_{pe}}{A_g} + \frac{P_{pe} \cdot e}{S_b} - \frac{M_d + M_{LL}}{S_t} = -0.066\ ksi$$ (Tension, less than allowable OK)

$$F_{tallow} := -0.0948 \cdot \sqrt{\frac{f'_c}{ksi}} \cdot ksi = -0.232\ ksi$$ (Tension)

Both Top and Bottom of Beams are under the allowable compressive stress, **OK**

CALDERWOOD ENGINEERING
222 RIVER ROAD
RICHMOND, ME 04357
PH. (207) 737-2007 FAX (207) 737-2008

Live Load Deflection

Deflection due to truck: **Number of lanes/Number of beams** $DF := \frac{2}{9} = 0.222$

Check Tandem:

$P_{truck2} := 25\ kip \cdot DF \cdot I.M. = 7.389\ kip$ $b_{truck} := \frac{(L_{bear} - 4\ ft)}{2} = 20\ ft$

$$\Delta_{truck} := \frac{P_{truck2} \cdot b_{truck}}{24 \cdot E_c \cdot I_x} \cdot \left(3 \cdot L_{bear}^{\ 2} - 4 \cdot b_{truck}^{\ 2}\right) = 0.413\ in$$

HL93 truck check:

$P_1 := 32\ kip$
$b_1 := 22\ ft - 9.3\ ft = 12.7\ ft$
$a_1 := 44\ ft - b_1 = 31.3\ ft$

$$\Delta_{max1} := \frac{1.33 \cdot DF \cdot (P_1) \cdot a_1 \cdot b_1 \cdot (a_1 + 2 \cdot b_1) \cdot \sqrt{3 \cdot a_1 \cdot (a_1 + 2 \cdot b_1)}}{27 \cdot E_c \cdot I_x \cdot L_{bear}} = 0.209\ in$$

$P_2 := 32\ kip$
$b_2 := 22\ ft - 4.7\ ft = 17.3\ ft$
$a_2 := 44\ ft - b_2 = 26.7\ ft$

$$\Delta_{max2} := \frac{1.33 \cdot DF \cdot (P_2) \cdot a_2 \cdot b_2 \cdot (a_2 + 2 \cdot b_2) \cdot \sqrt{3 \cdot a_2 \cdot (a_2 + 2 \cdot b_2)}}{27 \cdot E_c \cdot I_x \cdot L_{bear}} = 0.252\ in$$

$P_3 := 8\ kip$
$b_3 := 22\ ft - 18.7\ ft = 3.3\ ft$
$a_3 := 44\ ft - b_3 = 40.7\ ft$

$$\Delta_{max3} := \frac{1.33 \cdot DF \cdot (P_3) \cdot a_3 \cdot b_3 \cdot (a_3 + 2 \cdot b_3) \cdot \sqrt{3 \cdot a_3 \cdot (a_3 + 2 \cdot b_3)}}{27 \cdot E_c \cdot I_x \cdot L_{bear}} = 0.015\ in$$

$$\Delta_{truckHL} := \Delta_{max1} + \Delta_{max2} + \Delta_{max3} = 0.476\ in$$

HL93 truck controls over tandem . Calculated max deflections for HL93 are superimposed deflections at location of maximum deflection due to individual axle loads. This approach by inspection is conservative compared to single maximum deflection of all axles at single location.

Deflection due to lane load

$w_{lane} := 0.64\ \frac{kip}{ft} \cdot .25 = 0.013\ \frac{kip}{in}$ $\Delta_{lane} := \frac{5 \cdot w_{lane} \cdot L_{bear}^{\ 4}}{384 \cdot E_c \cdot I_x} = 0.124\ in$

$$\Delta_{livetotal} := \max\left(\Delta_{truckHL}, \left(0.25 \cdot \Delta_{truckHL} + \Delta_{lane}\right)\right) = 0.476\ in$$

$\Delta_{allow} := \frac{L_{bear}}{800} = 0.66\ in$ **allowable > total deflection, OK**

```
CheckDeflections := if Δallow > Δlivetotal
                       "Meets deflection requirements"
                    else
                       "Does not meet deflection requirements"
```

CheckDeflections = "Meets deflection requirements" **OK for live load deflection.**

CALDERWOOD ENGINEERING
222 RIVER ROAD
RICHMOND, ME 04357
PH. (207) 737-2007 FAX (207) 737-2008

Approach Slab Seat Check

check lifting at transfer
end section in flexure

$L_{beam} := 46.5\ ft$

$h := 18\ in$

$b := 3\ ft + 11.5\ in$

$b_{ext} := 3\ ft + 11.5\ in - 2\ ft = 1.958\ ft$

$A_{interface} := h \cdot b = 855\ in^2$

$A_{seat} := 5.75\ ft^2$

$w_g = 0.891\ \frac{kip}{ft}$

Loads: Assume 1 wheel $w_{truck} := \frac{32\ kip}{2} = 16\ kip$

Approach Seat Self Weight: $\gamma_c = 150\ pcf$ $w_{seat} := \gamma_c \cdot A_{seat} \cdot b = 3.414\ kip$

$x_{lifter} := 2\ ft$

$L_{lifters} := L_{beam} - 4\ ft = 42.5\ ft$

$L_{seat} := 2\ ft$

$x_{seatcg} := 10.75\ in$ from end of seat (aprch slab side)

$$R_b := \frac{-w_{seat} \cdot \langle x_{lifter} + x_{seatcg} \rangle - \left(w_g \cdot x_{lifter} \cdot \frac{x_{lifter}}{2}\right) + w_g \cdot \langle L_{lifters} + x_{lifter} \rangle \cdot \left(\frac{L_{lifters} + x_{lifter}}{2}\right) + w_{seat} \cdot \langle L_{lifters} + x_{lifter} + x_{seatcg} \rangle}{L_{lifters}} = 24.121\ kip$$

$R_a := R_b = 24.121\ kip$

CG of seat from end of beam $x_t := 10.75\ in$

Moment due to self weight and truck with impact (installed): $M_{tenseat} := 1.25 \cdot w_{seat} \cdot x_t + 1.33 \cdot 1.75 \cdot w_{truck} \cdot 2\ ft = 78.303\ kip \cdot ft$

Moment at end of beam/ backwall seat interface when lifting due to backwall self weight, truck with impact controls. $M_{wseat} := w_{seat} \cdot 10.75\ in = 3.058\ kip \cdot ft$

CALDERWOOD ENGINEERING
222 RIVER ROAD
RICHMOND, ME 04357
PH. (207) 737-2007 FAX (207) 737-2008

*** REV01 UPDATED *** **BEAM LIFTER DESIGN**

(4) Triple 1/2" DIAMETER STRAND LIFTING LOOPS PER BEAM, 2'-0" FROM END OF BEAM, SPACED 2' MIN. 16" EMBEDMENT W/ 1'-0" HOOKS

Total beam length $L_{total} = 46.5\ ft$

Weight of curbing per foot $w_{curb} := 175\ plf$

Weight of each rail $w_{rail} := 3000\ lbf$

Beam self weight $w_g = 0.891\ \frac{kip}{ft}$

Beam end secondary pour approach seat (each) $w_{seat} = 3.414\ kip$

Load per lifter: (curb side loops on fascia beams carry 78% of total carried by 2 loops at one end)

$$w_{lifter} := 0.78 \cdot \frac{\left(w_g \cdot L_{total} + w_{curb} \cdot L_{total} + w_{rail} + w_{seat} \cdot 2\right)}{2} = 23.158\ kip$$

Sling Load factor for 60 degree from horizontal = 1.16 (Fig. 5.3.2.1) $F_{lift60} := 1.16$

$$T_{lifter} := w_{lifter} \cdot F_{lift60} = 26.863\ kip$$

PCI Design Handbook (5.3.4.2) Strand Lifting Loops, Safe working load for triple strand loops: $F_{triple} := 8\ kip \cdot 2.2 = 17.6\ kip$

For the fascia beams with the secondary pour curb weight and rail, the tension in the 3 strand loop lifters exceeds the safe working load given by the PCI Design Handbook for Triple Strand Loops. Add another strand to all lifting loops in fascia beams and say lifters are OK.

Assuming the allowable capacity of strand loops is directly proporional to the concrete failure cone surface area, allowable capacity reduced for 16" embedment length,

Area cone for 24 in embedment, 45 degree cone $A_{cone24} := \pi \cdot (24\ in) \cdot \sqrt{2 \cdot \left((24\ in)^2\right)} + \pi \cdot (24\ in)^2 = 4368.658\ in^2$

Area cone for 16 in embedment, 45 degree cone $A_{cone16} := \pi \cdot (16\ in) \cdot \sqrt{2 \cdot \left((16\ in)^2\right)} + \pi \cdot (16\ in)^2 = 1941.626\ in^2$

$$\phi := \frac{A_{cone16}}{A_{cone24}} = 0.444$$

Cap of concrete for each lifter: Per AASHTO concrete shear capacity when only in shear in flexure: $v_c := 0.95 \cdot \sqrt{(4000 \cdot psi) \cdot psi} \cdot A_{cone16} = 116.659\ kip$

Shear capacity of concrete for 16" embedment and 45 degree failure plane. $cap16 := \phi \cdot v_c = 51.849\ kip$

cap16 > wlifter, 16" embedment for triple 1/2" strand lifting loops.
2 sets typ. each end of solid slab, 2ft from end of beam.

Check tension in top at lifters (2ft from beam end)

Moment at lifter (during lifting due to beam and seat self weight):

$$M_{Dlifter} := \frac{w_{seat} \cdot 2\ ft}{2} + w_{seat} \cdot 2\ ft + \left(w_g + w_{curb} + \frac{w_{rail}}{L_{total}}\right) \cdot 2\ ft \cdot 2\ \frac{ft}{2} = 12.502\ kip \cdot ft$$

@Transfer $f'_{ci} = 4000\ psi$ $L_{total} = 46.5\ ft$ $e = 4.318\ in$

$x = 36\ in$

Moment @ lifter due to self-weight+ approach seat $A_{psdebond} = 0.027\ ft^2$

Stress at Transfer: $P_{transdebond} := (202.5\ ksi - \Delta f_{pES}) \cdot A_{psdebond}$ $P_{transdebond} = 752.23\ kip$

$A_{ps} = 4.774\ in^2$ $A_{psdebond} := (N_{ps} - N_{psdebond}) \cdot A_{strand} = 3.906\ in^2$

$$f_{tlifter} := \frac{P_{transdebond}}{A_g} - \frac{P_{transdebond} \cdot e}{S_t} - \frac{M_{Dlifter}}{S_t}$$ $f_{tlifter} = -0.445\ ksi$ (-) indicates tension,

$$f_{blifter} := \frac{P_{transdebond}}{A_g} + \frac{P_{transdebond} \cdot e}{S_b} + \frac{M_{Dlifter}}{S_b}$$ $f_{blifter} = 2.205\ ksi$ compression

Stress Limits: 5.9.4

```
Compression@Transfer := if f_blifter ≤ f_Callow | = "OK"
                          || "OK"               |
                        else                    |
                          || "NG"               |
```

$f_{Callow} = 2.4\ ksi$

```
Tension@Transfer := if f_tlifter ≥ f_Tallow | = "NG, check with bonded"
                      || "OK"               |
                    else                    |
                      || "NG, check with bonded" |
```

$f_{Tallow} = -0.19\ ksi$

Determine required area steel for tension at lifters at transfer:

$A_{ps1} = 3.906\ in^2$ $\quad$ $d_{ps1} = 12.833\ in$

$f_{ps1} = 239.649\ ksi$ $\quad$ $f_{Tallowbond} = -0.48\ ksi$

5.8.3.5-1 Must include bonded reinforcement for tension at transfer for lifting beam.

$f_{tlifter} = -0.445\ ksi$ $\quad$ $f_{blifter} = 2.205\ ksi$ $\quad$ $h = 18\ in$

Calculate Total Tension in top of Beam @ Transfer

$$x := \frac{\langle h \cdot |f_{tlifter}| \rangle}{|f_{tlifter} + f_{blifter}|} = 4.553\ in$$ (Distance to N.A. from top of beam)

$$T_{trans} := 0.5 \cdot x \cdot f_{tlifter} \cdot b = -48.126\ kip$$

$F_{allow} := 30\ ksi$ Per Table 5.9.4.1.2-1

$$A_{sreq'd} := \frac{T_{trans}}{F_{allow}} = -1.604\ in^2$$

negative indicates steel required. ***Increased from 1.588in^2 to 1.604in^2 due to additional load from curb and rail. Specified additional mild bars still sufficient to resist tension***

$A_{\#5} := 0.31\ in^2$

$A_{smild} := 6 \cdot A_{\#5} = 1.86\ in^2$ > 1.604in^2 OK

Use (6) additional #5 bars, full length of beam for tension in top of beam at lifters (lifters located 2' from beam ends.)

CALDERWOOD ENGINEERING
222 RIVER ROAD
RICHMOND, ME 04357
PH. (207) 737-2007 FAX (207) 737-2008

Check backwall/beam face during lifting (at transfer, 4ksi)

Check mild reinforcing projecting from beam, flexure at beam/ backwall interface.
(Mtenseat calculated above pg 32, assume truck wheel on end of seat)

$b = 3.958\ ft$
$h = 18\ in$

Tension Reinforcement: (6) #5 bars, projecting from end of beam into seat with lap splice

$N_s := 6 \quad A_{\#5} = 0.31\ in^2 \quad A_{smild} = 1.86\ in^2 \quad d_s := h - 3.5\ in$

$f'_y := 60\ ksi \quad f_{ys} := 60\ ksi$

$f'_{cs} := 4\ ksi$

beta1 not less than 0.65:

$\beta_1 := 0.85 - 0.05 \cdot \left(\frac{f'_{cs}}{ksi} - 4\right) \qquad \beta_1 = 0.85$

for rectangular section behavior, (5.7.3.1.1-4)

$c := \frac{A_{smild} \cdot f_{ys}}{0.85 \cdot f'_c \cdot \beta_1 \cdot b} \qquad c = 0.542\ in$

$a := \beta_1 \cdot c = 0.461\ in$

$c = 0.542\ in \qquad d'_s = 2.813\ in \qquad f_s := f_{ys}$

$M_n := A_{smild} \cdot f_s \cdot \left(d_s - \frac{a}{2}\right)$

AASHTO LRFD Equation 5.7.3.2.2-1

$M_n = 132.708\ kip \cdot ft$

$\phi M_n := M_n = 132.708\ kip \cdot ft \quad > \quad M_{tenseat} = 78.303\ kip \cdot ft$

min area steel required to resist moment:

$A_{req} := 0.31\ in^2 \cdot 4 = 1.24\ in^2$

Approach seat section OK, only 4 bars required here but will project all (6) #5 bars into backwall. Project 4 bottom strands also.

CALDERWOOD ENGINEERING
222 RIVER ROAD
RICHMOND, ME 04357
PH. (207) 737-2007 FAX (207) 737-2008

Lap splice development length

AASHTO LRFD 5.11.2.1

$A_{\#5} := 0.31\ in^2 \quad f_{ymild} := 60\ ksi \quad d_{b\#5} := 0.625\ in$

for No. 11 bar and smaller $\quad l_{db} := \max\left(\frac{1.25 \cdot 0.31 \cdot 60}{\sqrt{6}} \cdot in, 0.4 \cdot 0.625\ in \cdot 60\right) = 15\ in$

Development length reduction factors per AASHTO LRFD:

for 6" min spacing and 3" min clr reduce length by 0.8 factor

reduce for additional steel beyond required. $\quad \phi_{As} := \frac{A_{req}}{A_{smild}} = 0.667$

Areq, is steel required to resist moment at interface of beam and backwall due to truck wheel at end of approach seat (pg 37)

Required length of splice: $\quad l_d := l_{db} \cdot 0.8 \cdot \phi_{As} = 8\ in$

Minimum lap splice length for all lap splices in backwall seat is 8"

CALDERWOOD ENGINEERING
222 RIVER ROAD
RICHMOND, ME 04357
PH. (207) 737-2007 FAX (207) 737-2008

Bearing: 3/4" x 6" x 3'-10" 50 Duro elastomeric bearing pad at each end of the beam

Compressive Stress:

Dimensions of bearing pad: $L := 6\ in$ $W := 3\ ft + 10\ in$ $h_{ri} := 0.75\ in$

Total Service Loads: $M_{TS1} = 557.13\ kip \cdot ft$ $V_{TS1} = 73.99\ kip$

Force at each bearing:

Bearing Area: $A_{bear} := 6\ in \cdot (3\ ft + 10\ in) = 1.917\ ft^2$

Compressive stress per bearing: $\sigma_s := \frac{V_{TS1}}{A_{bear}} = 0.268\ ksi$

Shear Modulus: shore A 50 Dur. $G := 0.095$

Shape Factor (S): $S := \frac{L \cdot W}{2 \cdot \langle h_{ri} \rangle \cdot (L + W)} = 3.538$

$1.00 \cdot G \cdot S = 0.336$ controls

$0.8\ ksi$

0.268ksi < 0.336ksi, OK

Compressive Deflection:
(AASHTO LRFD 14.7.6.3.3)

$S = 3.538$ $\sigma_s = 0.268\ ksi$ ==> strain $\varepsilon_T := 0.0375$

$\delta_T := \varepsilon_T \cdot h_{ri} = 0.028\ in$ < $0.09 \cdot h_{ri} = 0.068\ in$

Compressive deflection OK for bearings.

Shear:

coefficient thermal expansion for normal weight concrete: $\alpha := 0.000006$

both ends expanding so we assume 75% of beam length contributes to expansion at one end.

$\Delta_s := \alpha \cdot 45.5\ ft \cdot (70) \cdot 0.75 = 0.172\ in$

$limit := 2 \cdot \Delta_s = 0.344\ in$ < hri, OK in Shear deformation.

Bearing OK per AASHTO LRFD Method A

CALDERWOOD ENGINEERING
222 RIVER ROAD
RICHMOND, ME 04357
PH. (207) 737-2007 FAX (207) 737-2008

Andover, VT Bridge Superstructure Design

Suppplemental Calculations: Camber at Release & Beam Erection

Designer: Rachael A. Joyce
Checked: GNM

*Prestressed, 9 plank solid rectangular sections, 3'-11.5" 44' CL bearing to CL bearing span**, 46'-6" beam O.A.,***
3 in bituminous surface, Bridge Railing Galvanized 2 rail box beam standard S-360A

Check: Strength 1, Service 1, Service 3, Fatigue 1
Loads: HS-20, truck tandem
Deck Superstructure type (g) AASHTO LRFD Table 4.6.2.2.1-1
Reference: AASHTO LRFD Bridge Design Specifications, Seventh Edition, 2014; PCI Design Handbook

CALDERWOOD ENGINEERING
222 RIVER ROAD
RICHMOND, ME 04357
PH. (207) 737-2007 FAX (207) 737-2008

Section Properties

Span: $L_{bear} := 44.0\ ft$

CL bearing to CL bearing

Beam length $L_{total} := L_{bear} + 15\ in \cdot 2 = 46.5\ ft$

Section Type: 47.5" Wide X 18" Deep Solid Slab

Depth: $h := 18\ in$

Width: $b := 47.5\ in$

Number of beams $N_b := 9$

Total bridge width $W := b \cdot N_b + \langle N_b - 1 \rangle \cdot \frac{1}{2}\ in = 35.958\ ft$ *(2) 11.5' travel lanes*

Thickness of Shear Key $t_{shearkey} := 0.75\ in$

Solid Section Properties

Gross Area of Solid Section $A_g := h \cdot b = 855\ in^2$

Moment of Inertia of Solid Section
(interior beam, no curb) $I_x := \frac{b \cdot h^3}{12} = 23085\ in^4$ $I_y := \frac{h \cdot b^3}{12} = 160757.813\ in^4$

Polar Moment of Inertia $I_p := I_x + I_y = 183842.813\ in^4$

St. Venant's Torsional Intertia,
for solid sections per C4.6.2.2.1-2
LRFD 2014 $J := \frac{A_g^4}{40 \cdot I_p} = 72670.44\ in^4$

Extreme fiber to CG $y_b := \frac{h}{2}$ $y_t := y_b$

Section Modulus Interior Beam
(no curb) $S_b := \frac{I_x}{y_b}$ $S_b = 2565\ in^3$ $S := S_b$

$S_t := \frac{I_x}{y_t}$ $S_t = 2565\ in^3$

CALDERWOOD ENGINEERING
222 RIVER ROAD
RICHMOND, ME 04357
PH. (207) 737-2007 FAX (207) 737-2008

Concrete Properties @ Service Load:

28 day concrete compressive strength $f'_c := 6\ ksi$ $\sqrt{f'_c \cdot ksi} = 2.449\ ksi$

normal weight concrete with rebar, unit weight $\gamma_c := 0.150\ \frac{kip}{ft^3}$

correction factor for source of aggregate, taken as 1 (5.4.2.4) $K_1 := 1.0$

Concrete elastic modulus (5.4.2.4-1) $E_c := 33000 \cdot K_1 \cdot \left(\left(\frac{\gamma_c}{\frac{kip}{ft^3}}\right)^{1.5}\right) \cdot \sqrt{f'_c \cdot ksi}$ $E_c = 4695.98\ ksi$

$E_c = 4695982.325\ psi$

Concrete Properties @ Prestress Transfer:

Concrete compressive strength at release $f'_{ci} := 4\ ksi$

Concrete modulus of elasticity at realease $E_{ci} := 33000 \cdot K_1 \cdot \left(\left(\frac{\gamma_c}{\frac{kip}{ft^3}}\right)^{1.5}\right) \cdot \sqrt{f'_{ci} \cdot ksi}$ $E_{ci} = 3834.25\ ksi$

Prestressing Tendons:

Prestressing method: ***pretensioning***

Tendon Profile

0.6-in diameter strand $d_b := 0.6\ in$

Number of strands $N_{ps} := 22$

Area of prestressing steel $A_{strand} := 0.217\ in^2$ $A_{ps} := A_{strand} \cdot N_{ps} = 4.774\ in^2$

Type of relaxation:
low relaxation strand

Specified tensile strength of tendon $f_{pu} := 270\ ksi$

Specified yield limit for strands

Modulus of Elasticity $E_{ps} := 28500\ ksi$

CALDERWOOD ENGINEERING
222 RIVER ROAD
RICHMOND, ME 04357
PH. (207) 737-2007 FAX (207) 737-2008

Deflection and Camber:

PCI Design Manual: Table 4.8.4.1, Suggested simple span multipliers to be used as a guide in estimating long-term cambers and deflections for typical prestressed members.

At Erection:

1) Deflection (downward) component - apply to elastic deflection due to member weight at release of prestress.

$$multiply1 := 1.85$$

2) Camber (upward) component - apply to the elastic camber due to prestress at the time of release of prestress.

$$multiply2 := 1.80$$

CALDERWOOD ENGINEERING
222 RIVER ROAD
RICHMOND, ME 04357
PH. (207) 737-2007 FAX (207) 737-2008

Deflection due to Prestressing force at Transfer

$f_{pi} := 202.65\ ksi$ $\Delta f_{pi} := 9.917\ ksi$ $A_{ps1} := 0.217\ in^2$

Total prestressing force after transfer $P_{pt} := (f_{pi} - \Delta f_{pi}) \cdot A_{ps1} \cdot N_{ps} = 920.107\ kip$

eccentricity of prestressing strand at midspan $e_c := 4.318\ in$

overall beam length $L := 46.5\ ft$

modulus of Elasticiy at transfer $E_{ci} := 3834\ ksi$

Moment of Inertia of the noncomposite precast beam $I_g := 23085\ in^4$

Camber due to prestress after transfer $\Delta_p := \frac{P_{pt} \cdot e_c \cdot L^2}{8 \cdot E_{ci} \cdot I_g} = 1.747\ in$

Deflection Due to Beam Self Weight

Interior Beam Self Weight $w_{gint} := 0.891\ \frac{kip}{ft}$

Exterior Beam with Curbing $w_{gext} := 0.891\ \frac{kip}{ft} + 0.175\ \frac{kip}{ft} = 1.066\ \frac{kip}{ft}$

Deflection due to beam Self-weight

Interior Beam @ Transfer: $L_{beam} := 46.5\ ft$ $\Delta_{ginttrans} := \frac{5 \cdot w_{gint} \cdot L_{beam}^4}{384 \cdot E_{ci} \cdot I_g} = 1.059\ in$

Interior Beam @ Erection: $L_{span} := 44\ ft$ $\Delta_{gint} := \frac{5 \cdot w_{gint} \cdot L_{span}^4}{384 \cdot E_{ci} \cdot I_g} = 0.849\ in$

Interior Beam Deflection at Erection with PCI multiplier: $multiply1 \cdot \Delta_{gint} = 1.571\ in$

Exterior Beam @ Transfer: $\Delta_{ginttrans} = 1.059\ in$

Exterior Beam @ Erection: $L_{span} := 44\ ft$ $\Delta_{gext} := \frac{5 \cdot w_{gext} \cdot L_{span}^4}{384 \cdot E_{ci} \cdot I_g} = 1.016\ in$

Deflection at Erection with PCI multiplier: $multiply1 \cdot \Delta_{gext} = 1.879\ in$

CALDERWOOD ENGINEERING
222 RIVER ROAD
RICHMOND, ME 04357
PH. (207) 737-2007 FAX (207) 737-2008

Deflection Due to Barrier and Wearing Surface Weights

weight of barrier $w_{bc} := 50$ plf

weight of wear surface $w_{ws} := 0.148$ klf

$$\Delta_{bws} := \frac{5 \cdot (w_{bc} + w_{ws}) \cdot L_{span}^{4}}{384 \cdot E_c \cdot I_g} = 0.154 \text{ in}$$

Deflection and Camber Summary

Theoretical Camber @ Release Interior & Exterior Beam $\Delta_p - \Delta_{ginttrans} = 0.688$ in

Theoretical Camber @ Erection Interior Beam (PCI Multipliers) $1.80\ \Delta_p - 1.85\ \Delta_{gint} = 1.574$ in

Theoretical Camber @ Erection Exterior Beam (PCI Multipliers) $1.80 \cdot \Delta_p - 1.85 \cdot \Delta_{gext} = 1.266$ in

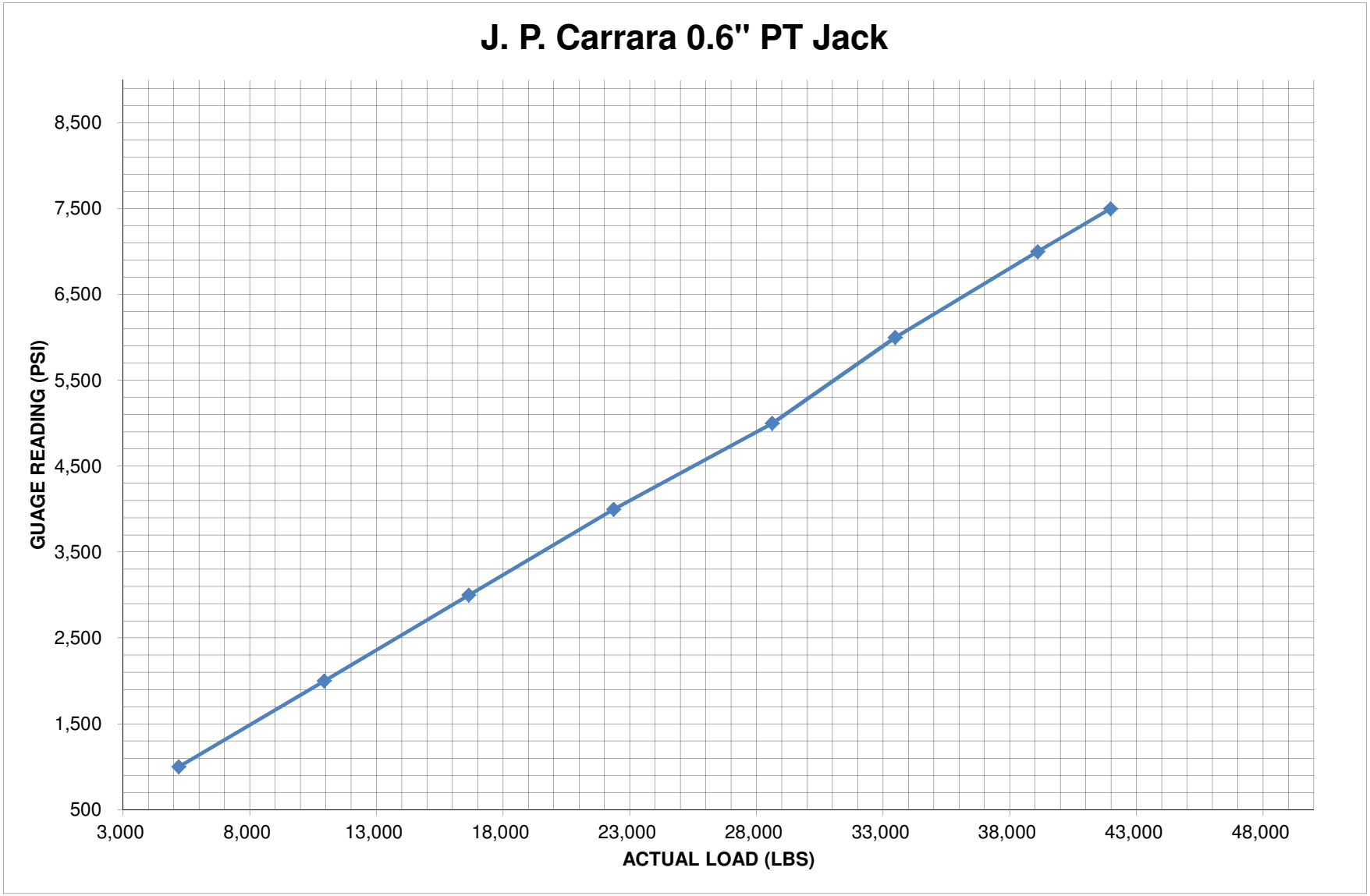
J. P. Carrara 0.6" PT Jack
GUAGE READING (PSI)
8,500
7,500
6,500
5,500
4,500
3,500
2,500
1,500
500
3,000
8,000
13,000
18,000
23,000
28,000
33,000
38,000
43,000
48,000
ACTUAL LOAD (LBS)

Report and Certificate of Calibration

by

Universal Calibrations

257 E. Bridge Street Westbrook, ME 04092

207-615-4430

Certificate # JPC404590-ECA62814OCTOBER2014

Name: J.P. Carrara & Sons, Inc.

Address: 2464 Case Street

City Middlebury State: VT Zip: 05753

Location: Laboratory

Calibration System Information

Code	Equipment Used	Serial No.	Date Calibrated	Class A Lower Limit
1	1000K Morehouse Calibration Grade Load Cell	C-8296	May 23, 2014	24,000.00
2	50K Morehouse Calibration Grade Load Cell	C-8172	May 23,2014	2,000.00
3	5K Morehouse Calibration Grade Load Cell	C-8192	May 23, 2014	50.00 Lbf
4	Morehouse DSC-USB Digital Interface	16805522		

Instrument Data

Calibration Date:	October 14, 2014	**Method Used:**	Follow the Force
Calibration Due Date:	October 14, 2014	**Serial #:**	404590/ECA628
Calibration Frequency:	12 Months	**Capacity:**	10,000 PSI
Manufacturer:	OTC	**Number of Ranges**	One
Type:	Stressing Jack	**Indicating System:**	Gauge
Condition:	Good	**Machine Readings:**	Within Tolerance

Instrument Range:	0-10,000 psi	**Range Resolution:**	100 psi	**Mode Verified:**	Compression

System Code	Stress Jack Reading (psi)	Standard Reading (lbf)
2,4	1,000.0	5,192.0
2,4	2,000.0	10,939.0
2,4	3,000.0	16,641.0
2,4	4,000.0	22,362.0
2,4	5,000.0	28,617.0
2,4	6,000.0	33,470.0
2,4	7,000.0	39,092.0
2,4	7,500.0	41,972.0

REMARKS:

Date: October 14, 2014

Signature:

Technician: James Myers

Thank you for your business.

Please call us at 1-207-615-4430 for all your calibration needs.

The above system (Instument, Load Cell, Integral Software and Output Device(s), and accessories has been calibrated in accordance with ASTM E4-99 - Standard Practices for Force Verification of Testing machines using apparatus and standards calibrated in accordance to ASTM E74-99 - Standard practice for Calibration of Force-Measuring Instruments for Verifying

This Certificate is issued as a statement of the fact that on this date the above instrument(s) had an accuracy as indicated. It should not be construed or regarded as a Guarantee or Warranty of any kind (in favor of the client, the client's customers, or the public at large) that the instrument(s) will continue to retain the same percentage (%) of accuracy or efficiency as determined on

This report shall not be reproduced except in full, without written approval from Universal Calibrations.

REV. 01/01/01