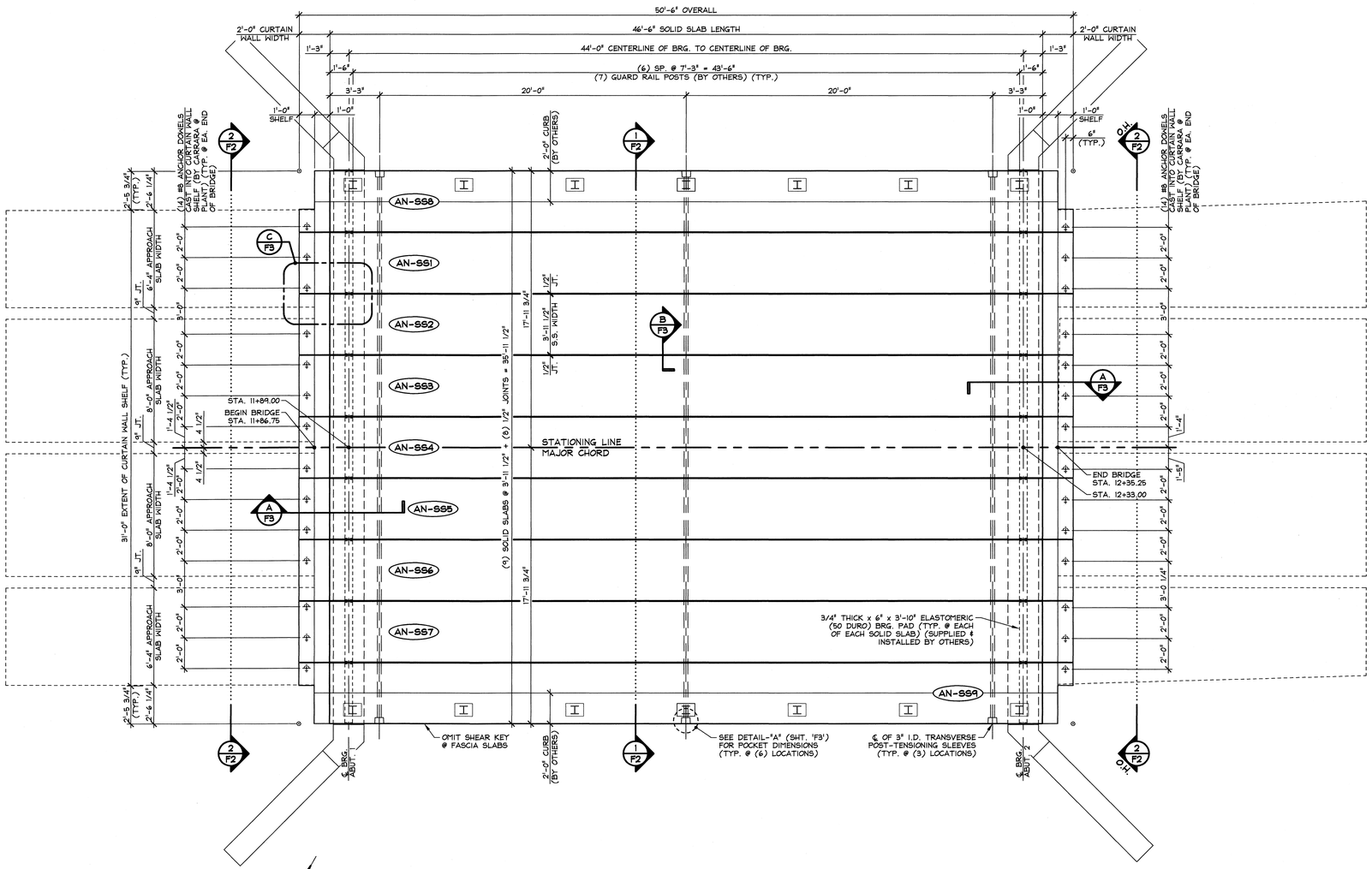

1/F1 PRESTRESSED SOLID SLAB LAYOUT WITH PRECAST CURTAIN WALLS

1/4" = 1'-0"

VOIDED SLAB GENERAL NOTES

1. MIN. CONCRETE STRENGTH AT 28 DAYS SHALL BE 6,000 PSI.
2. MIN. CONCRETE STRENGTH AT STRESS TRANSFER SHALL BE 4,000 PSI.
3. REINFORCING STEEL SHALL BE GR-60, ASTM A-615 (AASHTO M31) LEVEL 1 (EPOXY COATED).
4. PRESTRESSING STRANDS SHALL CONFORM TO ASTM A-416 (AASHTO M203) AND SHALL CONSIST OF 0.60"Φ x 270 KSI 7-WIRE LOW RELAXATION STRANDS.
5. PRESTRESSING STRANDS SHALL EACH BE PULLED TO HAVE A NET TENSION OF 44.0 K AFTER ACCOUNTING FOR CHUCK SLIPPAGE. TENSION SHALL BE VERIFIED BY MEASURING STRAND ELONGATION. (SEE EXAMPLE ELONGATION CALCULATION AND TENSIONING PROCEDURE, THIS SHEET.)
6. ENDS OF PRESTRESSING STRANDS SHALL BE CUT FLUSH WITH END OF SOLID SLABS USING AN ABRASIVE WHEEL (UNLESS NOTED OTHERWISE) AND TWO PART EPOXY PAINTED.
7. ALL EXPOSED CORNERS SHALL BE CHAMFERED 3/4".
8. THE TOP OF SLABS SHALL RECEIVE A SMOOTH FLOAT FINISH (UNLESS NOTED OTHERWISE).
9. SHEAR KEY SURFACES SHALL BE SAND BLASTED CLEAN.
10. SLABS SHALL BE HANDLED AND ERECTED USING THE LIFTING LOOPS ONLY. RIGGING SHALL BE CONFIGURED SUCH THAT EQUAL FORCES ARE APPLIED TO EACH OF THE TWO LIFTING LOOPS AT EACH END OF THE SLAB. THE MINIMUM SLING ANGLE FROM THE HORIZONTAL SHALL BE 60°. **THE PINS OF THE SHACKLES SHALL BE PLACED THROUGH THE LIFTING LOOPS. SEE DETAIL, SHEET 'F3'.** SLABS SHALL BE STORED AND TRANSPORTED WITH TIMBER SUPPORTS WITHIN 2'-0" OF THE SLAB ENDS, UNLESS APPROVED BY J.P. CARRARA & SONS, INC.

    ONCE SLABS HAVE BEEN ERECTED, CUT LIFTING LOOPS AT RECESS, EPOXY PAINT AND PATCH AS REQUIRED (BY OTHERS).
11. MATERIAL SPECIFICATION AND MIX DESIGN SHALL CONFORM TO VERMONT SPEC. P510.02 AND P510.05 RESPECTIVELY.

    DESIGN MIX: J.P.C. BRIDGE MIX #425M (NO DCI) (Approved 3.21.15)
12. QUALITY CONTROL PROCEDURES ARE IN ACCORDANCE WITH PCI REQUIREMENTS. J.P. CARRARA & SONS, INC. IS A PCI CERTIFIED PLANT.
13. CURING METHOD: AS SOON AS THE TOP OF SLAB IS FINISHED, A COVER OF INSULATED POLY. THE DESIRED CURING TEMPERATURE RANGE SHALL NOT DROP BELOW 70°F. THE TEMPERATURE SHALL BE RECORDED BY AUTOMATIC SENSOR INSTRUMENTS ON GRAPH CHARTS, SPACED NOT MORE THAN 100' APART AND WILL CONTINUE UNTIL RELEASE STRENGTH IS ACHIEVED. EACH CHART SHALL BE MARKED WITH THE CASTING DATED AND LOCATION OF THE RECORDER. IF NECESSARY TO MAINTAIN CASTING BED TEMPERATURE PRIOR TO CONCRETE PLACEMENT OR TO ACCELERATE EARLY AGE STRENGTH GAIN, EXTERNAL RADIANT HEAT MAY BE EMPLOYED VIA HOT WATER DUCTS BENEATH AND WITHIN THE PERIPHERY OF THE CASTING BED. MAXIMUM CURING TEMPERATURE SHALL NOT EXCEED PCI SPECIFIED LIMITS.
14. TRANSVERSE POST-TENSIONING SEQUENCE:
    A. ERECT SOLID SLABS, AND POST-TENSION TENDONS TO APPROXIMATELY 5,000 PSI.
    B. GROUT SHEAR KEYS (BY OTHERS).
    C. ONCE SHEAR KEY GROUT HAS ATTAINED A MINIMUM COMPRESSIVE STRENGTH OF 1,500 PSI; POST-TENSION TENDONS TO 32,000 LBS.
    D. EXCESS TENDON LENGTH SHALL BE CUT USING AN ABRASIVE WHEEL.
    E. APPLY TWO PART EPOXY TO EXPOSED TENDON AND CHUCK (BY OTHERS).
15. OWNER SHALL PROVIDE APPROPRIATE WATERPROOFING TO GROUTED SHEAR KEYS. J.P. CARRARA & SONS, INC. SHALL NOT BE HELD LIABLE FOR PROBLEMS ASSOCIATED WITH MOISTURE INFILTRATING GROUTED SHEAR KEYS.

EXAMPLE PRESTRESSING STRAND ELONGATION CALC. AND TENSIONING

(NOT TO BE USED FOR CONSTRUCTION)

SIZE & GRADE: 0.60"Φ x 270 KSI
AREA: 0.217 IN^2
TENSION: 44,000 LB. EACH STRAND
GRIP-TO-GRIP: 189'-0" = 189.00'
Es = 28,600,000 PSI (ASSUMED FOR THESE CALCULATIONS; VALUE TO BE OBTAINED FOR STRAND SPOOL ACTUALLY USED)

EXAMPLE:

$$\Delta = \frac{PL}{AE} = \frac{(44{,}000 - 3{,}000) \times 189.00 \times 12}{0.217 \times 28{,}600{,}000} = 14.983''$$

THEREFORE: (TOLERANCES ± 5%)
△ UPPER LIMIT = 1.05 x 14.983" = 15.73" = 15 3/4"
△ LOWER LIMIT = 0.95 x 14.983" = 14.23" = 14 1/4"

EXTRA FORCE REQUIRED TO COMPENSATE FOR 1/2" CHUCK SLIPPAGE:

$$\Delta P = \frac{0.5 \times 41{,}000}{14.983} = 1{,}368 \text{ LBS.}$$

TOTAL TENSIONING FORCE = 44,000 + 1,368 = 45,368 LBS.

STRAND TENSIONING PROCEDURE:

1. PULL EACH STRAND INITIALLY TO 3,000# LBS. AND MARK STRAND.
2. THEN PULL EACH STRAND TO A TOTAL TENSION OF 45,368# LBS. AND MEASURE ELONGATION AFTER SEATING. IT MUST BE BETWEEN 14 1/4"# AND 15 3/4"#.

    # NOTE: FORCES READ ON STRESSING JACK GAUGES MUST BE MADE TO CORRESPOND TO ABOVE VALUES BASED ON CALIBRATION DATA FOR SPECIFIC JACK USED.

DESIGN LIVE LOAD: HL-93

APPROVAL STAMP:

STATE OF VERMONT — ERIC P. CALDERWOOD — NO. 9117 — LICENSED — PROFESSIONAL ENGINEER

J.P. CARRARA & SONS INC.
Precast & Prestress Manufacturer
2464 CASE STR., MIDDLEBURY, VERMONT 05753 Phone:(802)388-6361 Fax:(802)388-9010

RENAUD BROS, INC.
CONTRACTOR
VERNON, VERMONT

STATE OF VERMONT AGENCY OF TRANSPORTATION
COUNTY OF WINDSOR

TOWN OF ANDOVER
VT RTE 11, RURAL MINOR ARTERIAL
BRIDGE NO.: 41 PROJECT NO.: BHF 016-1(29)

PRESTRESSED SOLID SLAB LAYOUT

DATE: MAY 6, 2015	
SCALE: NOTED	
CHKD: J.C.	DFTM: B.L.
JOB NO: 23465-015	
DWG. NO: F1	

F:\VT-Bridges\23465-15 Andover 41\23465-F1.dwg, 5/12/2015 4:40:32 PM

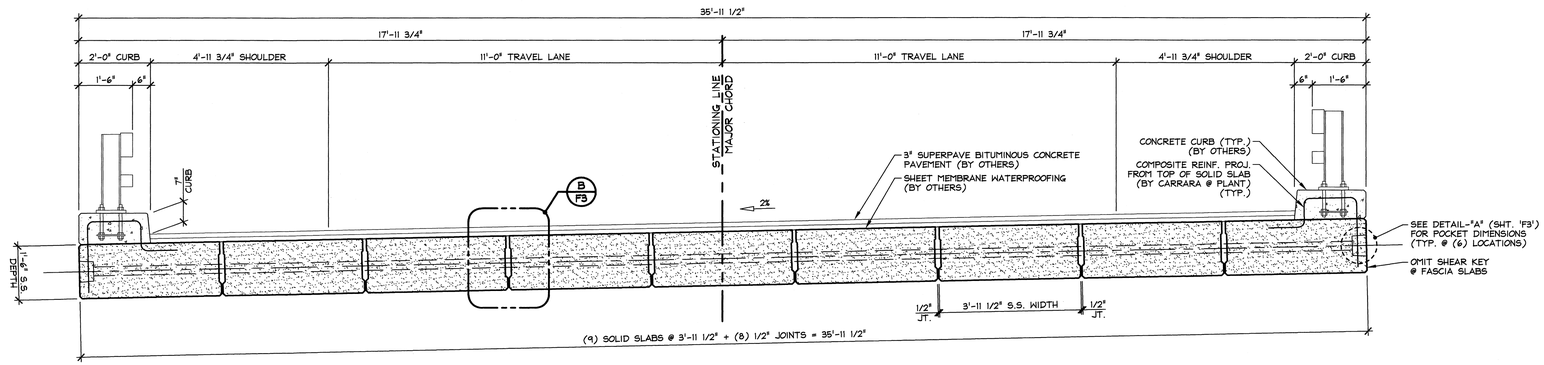

1/F2 TRANSVERSE SOLID SLAB SECTION

1/2" = 1'-0"

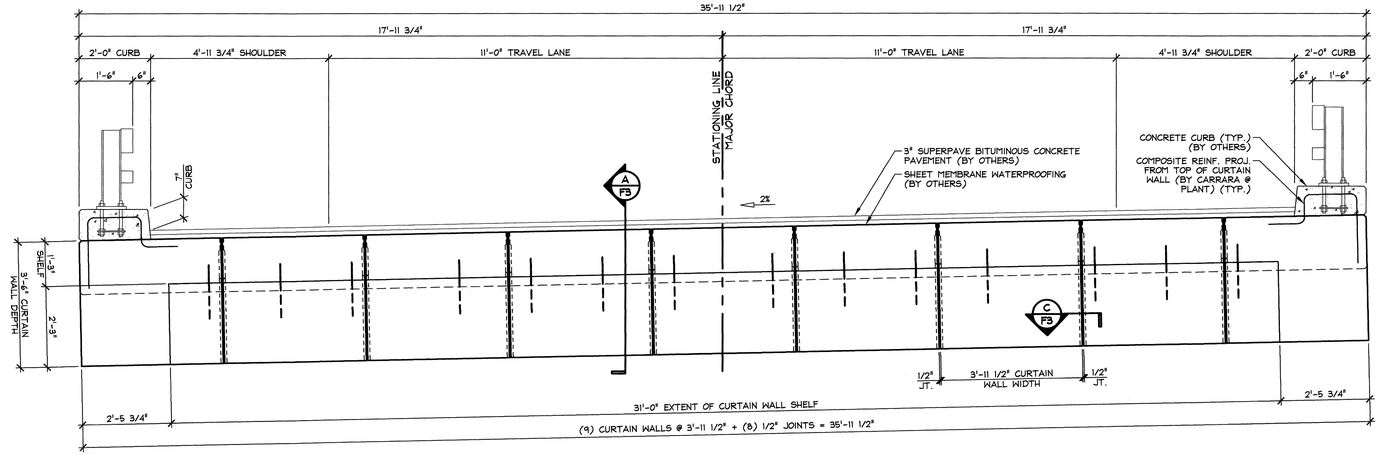

2/F2 CURTAIN WALL ELEVATION

1/2" = 1'-0"

APPROVAL STAMP:

STATE OF VERMONT
ERIC J. GOLDENWOOD
No. 11
LICENSED
PROFESSIONAL ENGINEER

J.P. CARRARA & SONS INC. Precast & Prestress Manufacturer 2464 CASE STR., MIDDLEBURY, VERMONT 05753 Phone:(802)388-6361 Fax:(802)388-9010	RENAUD BROS, INC. CONTRACTOR VERNON, VERMONT	
STATE OF VERMONT AGENCY OF TRANSPORTATION COUNTY OF WINDSOR	DATE: MAY 6, 2015	
	SCALE: NOTED	
TOWN OF ANDOVER VT RTE 11, RURAL MINOR ARTERIAL BRIDGE NO.: 41 PROJECT NO.: BHF 016-1(29)	CHKD: J.C.	DFTM: B.L.
	JOB NO: 23465-015	
TRANSVERSE SECTION & CURTAIN WALL ELEVATION	DWG. NO: F2	

F:\VT-Bridges\23465-15 Andover 41\23465-F2.dwg, 5/12/2015 4:41:32 PM

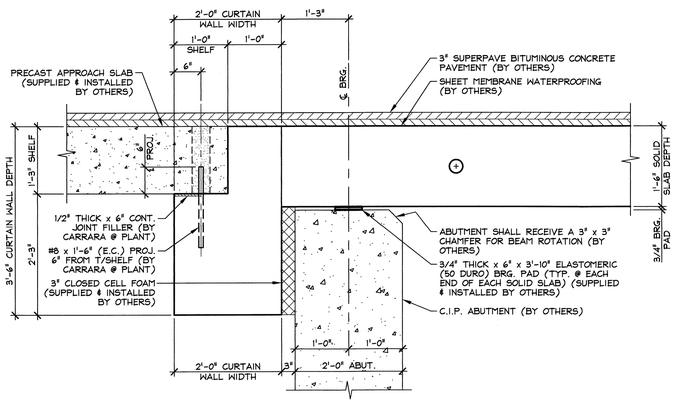

A / F3 BEARING SECTION

SOLID SLAB PROJECTING REINFORCING AND CURTAIN WALL REINFORCING NOT SHOWN FOR CLARITY

3/4" = 1'-0"

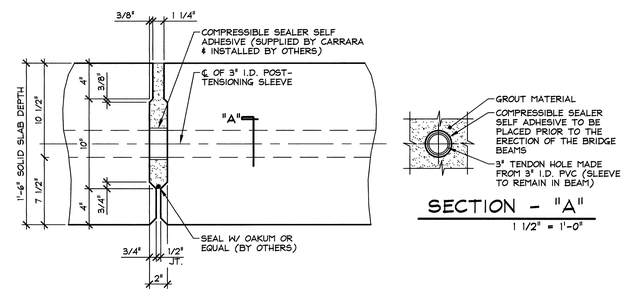

SECTION - "A"

1 1/2" = 1'-0"

B / F3 SOLID SLAB SHEAR KEY SECTION @ P.T. SLEEVE

1 1/2" = 1'-0"

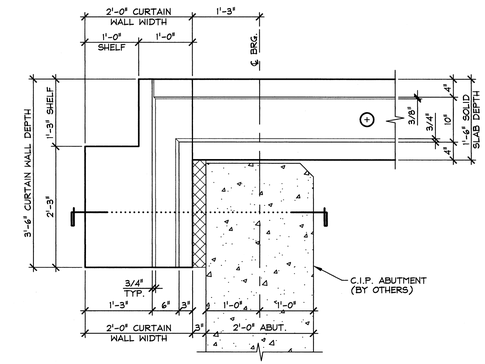

SHEAR KEY ELEVATION

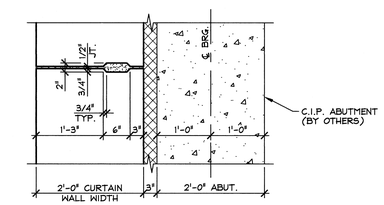

SHEAR KEY PLAN

C / F3 CURTAIN WALL SHEAR KEY DETAILS

3/4" = 1'-0"

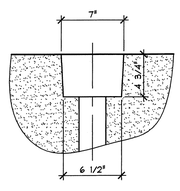

PLAN OF POCKET

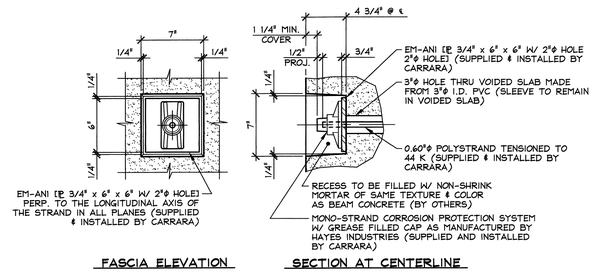

FASCIA ELEVATION

SECTION AT CENTERLINE

DETAIL - "A"

1 1/2" = 1'-0"

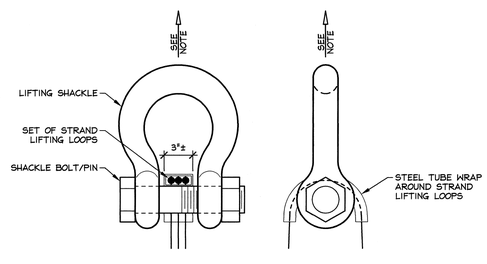

NOTE: ABUTMENTS SHALL BE HANDLED AND ERECTED USING THE LIFTING LOOPS ONLY. RIGGING SHALL BE CONFIGURED SUCH THAT EQUAL FORCES ARE APPLIED TO EACH SET OF LIFTING LOOPS AT EACH END OF THE SLAB. THE MINIMUM SLING ANGLE FROM THE HORIZONTAL SHALL BE 60°. SHACKLE BOLT/PIN SHALL BE PLACED UNDER LIFT LOOPS AS SHOWN. DESIGN AND CONFIGURATION OF RIGGING BY PURCHASER.

LIFTING SHACKLE DETAILS

N.T.S.

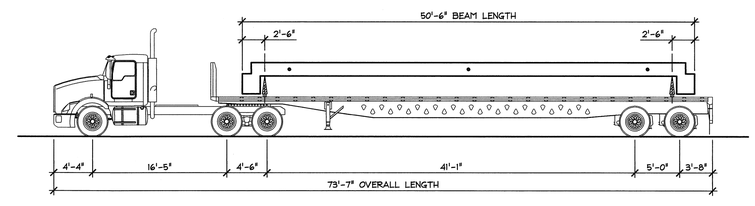

SHIPPING DETAIL

N.T.S.

APPROVAL STAMP:

STATE OF VERMONT — ERIC P. GOLDERWOOD — NO. 9711 — LICENSED PROFESSIONAL ENGINEER

J.P. CARRARA & SONS INC. Precast & Prestress Manufacturer 2464 CASE STR., MIDDLEBURY, VERMONT 05753 Phone:(802)388-6361 Fax:(802)388-9010	RENAUD BROS, INC. CONTRACTOR VERNON, VERMONT
STATE OF VERMONT AGENCY OF TRANSPORTATION COUNTY OF WINDSOR	DATE: MAY 6, 2015 SCALE: NOTED
TOWN OF ANDOVER VT RTE 11, RURAL MINOR ARTERIAL BRIDGE NO.: 41 PROJECT NO.: BHF 016-1(29)	CHKD: J.C. DFTM: B.L. JOB NO: 23465-015
SUPERSTRUCTURE DETAILS	DWG. NO: F3

F:\VT-Bridges\23465-15 Andover 41\23465-F3.dwg, 5/12/2015 4:42:30 PM

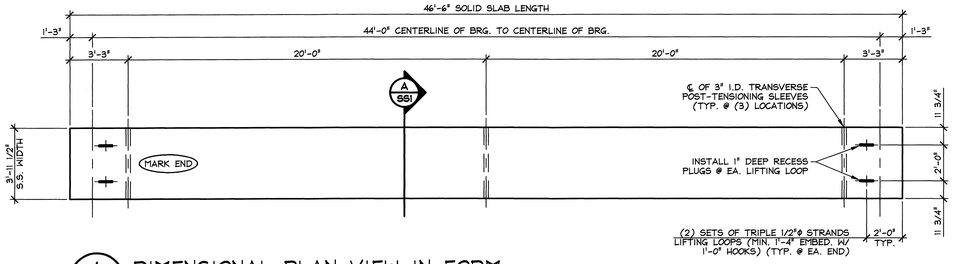

1 SS1 DIMENSIONAL PLAN VIEW IN FORM

1/4" = 1'-0"

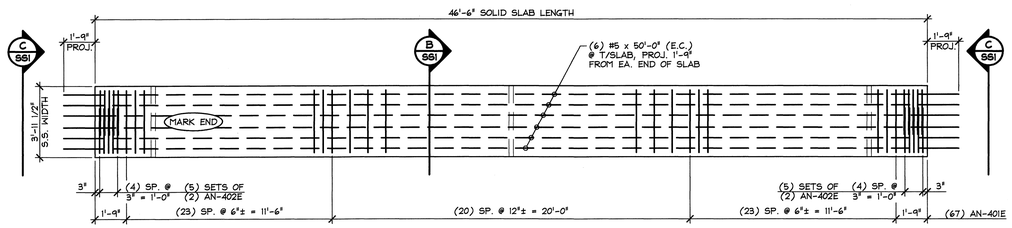

2 SS1 REINFORCING PLAN VIEW IN FORM

1/4" = 1'-0"

SHOP NOTE:
ADJUST REINFORCING AS REQUIRED TO CLEAR POST-TENSIONING SLEEVES.

DETENSIONING SCHEDULE

N.T.S.

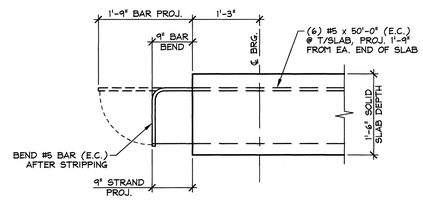

D SS1 PROJ. STRAND & BAR BEND DETAIL

3/4" = 1'-0"

MARK:	AN-SS1	QTY.:	1	WT.:	20.27 T	VOL.:	10.01 cy
MARK:	AN-SS2	QTY.:	1	WT.:	20.27 T	VOL.:	10.01 cy
MARK:	AN-SS3	QTY.:	1	WT.:	20.27 T	VOL.:	10.01 cy
MARK:	AN-SS4	QTY.:	1	WT.:	20.27 T	VOL.:	10.01 cy
MARK:	AN-SS5	QTY.:	1	WT.:	20.27 T	VOL.:	10.01 cy
MARK:	AN-SS6	QTY.:	1	WT.:	20.27 T	VOL.:	10.01 cy
MARK:	AN-SS7	QTY.:	1	WT.:	20.27 T	VOL.:	10.01 cy

MATERIAL LIST / SOLID SLAB

ITEM	MARK	DESCRIPTION	QTY./SLAB
1	AN-401E	#4 BENT BAR (LEVEL 1, EPOXY COATED)	67
2	AN-402E	#4 BENT BAR (LEVEL 1, EPOXY COATED)	20
3	AN-403E	#4 BENT BAR (LEVEL 1, EPOXY COATED)	8
4	AN-404E	#4 BENT BAR (LEVEL 1, EPOXY COATED)	4
5			
6		#5 x 50'-0" (LEVEL 1, EPOXY COATED)	6
7			
8			
9		SET OF TRIPLE 1/2"ϕ STRAND LIFTING LOOPS	4
10			

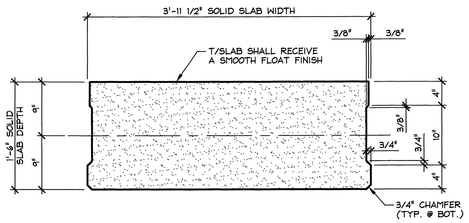

A SS1 DIMENSIONAL SECTION

1" = 1'-0"

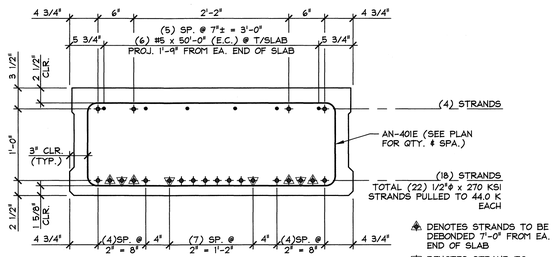

DENOTES STRANDS TO BE DEBONDED 7'-0" FROM EA. END OF SLAB

DENOTES STRAND TO PROJ. 9" FROM EACH END OF SLAB

B SS1 REINFORCING SECTION @ MID-SPAN

1" = 1'-0"

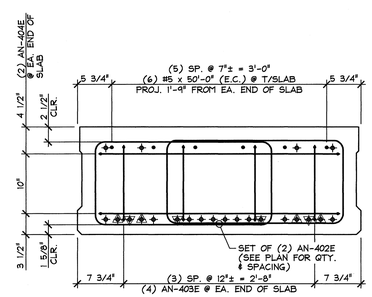

C SS1 REINFORCING SECTION @ SLAB END

1" = 1'-0"

APPROVAL STAMP:

STATE OF VERMONT ERIC P. CALDERWOOD NO. 9111 LICENSED PROFESSIONAL ENGINEER

J.P. CARRARA & SONS INC.
Precast & Prestress Manufacturer
2464 CASE STR., MIDDLEBURY, VERMONT 05753 Phone:(802)388-6361 Fax:(802)388-9010

RENAUD BROS, INC.
CONTRACTOR
VERNON, VERMONT

STATE OF VERMONT AGENCY OF TRANSPORTATION
COUNTY OF WINDSOR

TOWN OF ANDOVER
VT RTE 11, RURAL MINOR ARTERIAL
BRIDGE NO.: 41 PROJECT NO.: BHF 016-1(29)

PRESTRESSED SOLID SLAB DETAILS

DATE: MAY 6, 2015
SCALE: NOTED
CHKD: J.C. DFTM: B.L.
JOB NO: 23465-015
DWG. NO: SS1

F:\VT-Bridges\23465-15 Andover 41\23465-SS1.dwg, 5/12/2015 4:51:49 PM

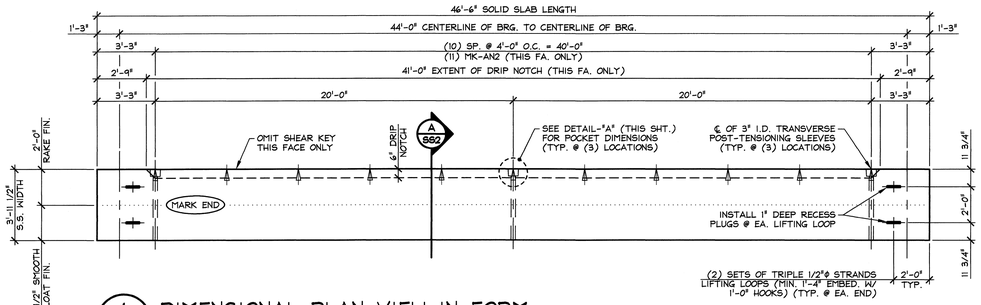

1 SS2 DIMENSIONAL PLAN VIEW IN FORM

1/4" = 1'-0"

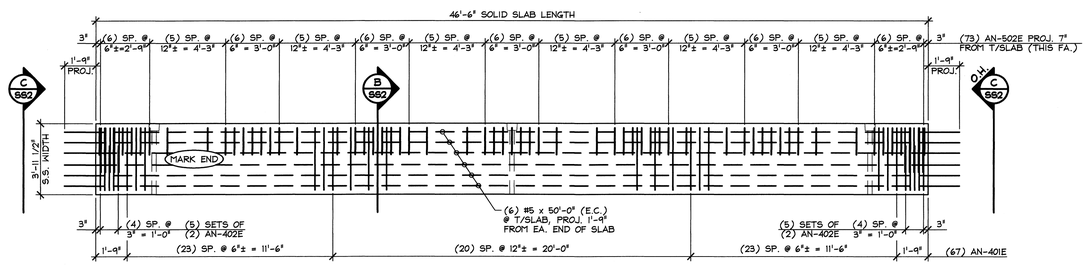

2 SS2 REINFORCING PLAN VIEW IN FORM

1/4" = 1'-0"

SHOP NOTE:
ADJUST REINFORCING AS REQUIRED TO CLEAR POST-TENSIONING SLEEVES AND POCKETS.

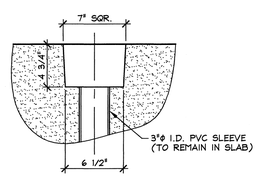

DETAIL - "A"

1 1/2" = 1'-0"

DETENSIONING SCHEDULE

N.T.S.

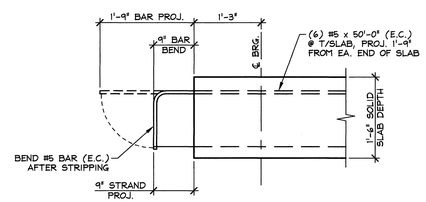

D SS2 PROJ. STRAND & BAR BEND DETAIL

3/4" = 1'-0"

MARK:	AN-SS8	QTY.: 1	WT.: 20.48 T	VOL.: 10.11 cy
MARK:	AN-SS9	QTY.: 1	WT.: 20.48 T	VOL.: 10.11 cy

MATERIAL LIST / SOLID SLAB

ITEM	MARK	DESCRIPTION	QTY./SLAB
1	AN-401E	#4 BENT BAR (LEVEL 1, EPOXY COATED)	67
2	AN-402E	#4 BENT BAR (LEVEL 1, EPOXY COATED)	20
3	AN-403E	#4 BENT BAR (LEVEL 1, EPOXY COATED)	8
4	AN-404E	#4 BENT BAR (LEVEL 1, EPOXY COATED)	4
5			
6	AN-502E	#5 BENT BAR (LEVEL 1, EPOXY COATED)	73
7		#5 x 50'-0" (LEVEL 1, EPOXY COATED)	6
8			
9	MK-AN2	DAYTON C-24 TYPE 4-APR DECK FORM HANGER (GALV.)	11
10		SET OF TRIPLE 1/2"ϕ STRAND LIFTING LOOPS	4

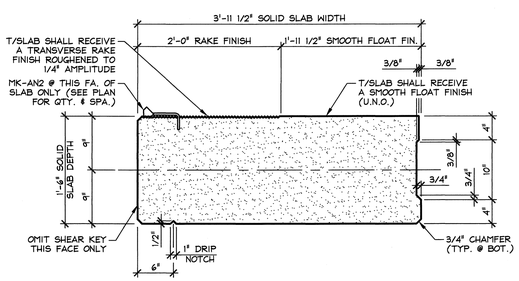

A SS2 DIMENSIONAL SECTION

1" = 1'-0"

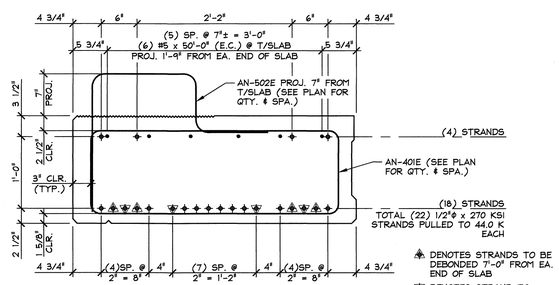

B SS2 REINFORCING SECTION @ MID-SPAN

1" = 1'-0"

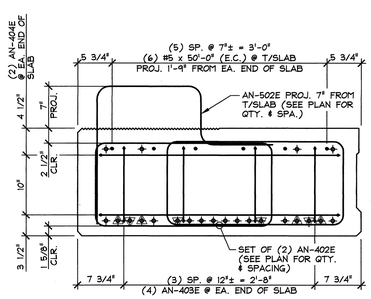

C SS2 REINFORCING SECTION @ SLAB END

1" = 1'-0"

APPROVAL STAMP:

STATE OF VERMONT — ERIC J. BALDERSON — LICENSED PROFESSIONAL ENGINEER

J.P. CARRARA & SONS INC.
Precast & Prestress Manufacturer
2484 CASE STR., MIDDLEBURY, VERMONT 05753 Phone:(802)388-6361 Fax:(802)388-9010

RENAUD BROS, INC.
CONTRACTOR
VERNON, VERMONT

STATE OF VERMONT AGENCY OF TRANSPORTATION
COUNTY OF WINDSOR

TOWN OF ANDOVER
VT RTE 11, RURAL MINOR ARTERIAL
BRIDGE NO.: 41 PROJECT NO.: BHF 016-1(29)

PRESTRESSED SOLID SLAB DETAILS

DATE: MAY 6, 2015
SCALE: NOTED
CHKD: J.C. DFTM: B.L.
JOB NO: 23465-015
DWG. NO: SS2

F:\VT-Bridges\23465-15 Andover 41\23465-SS2.dwg, 5/12/2015 4:54:50 PM

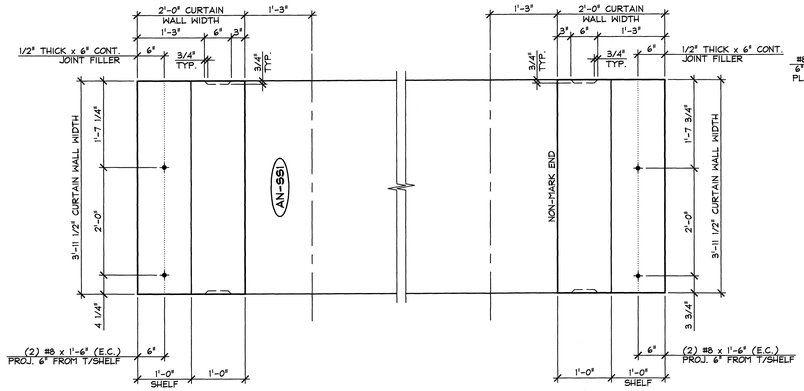

1 CW1 DIMENSIONAL PLAN VIEW IN FORM
3/4" = 1'-0"

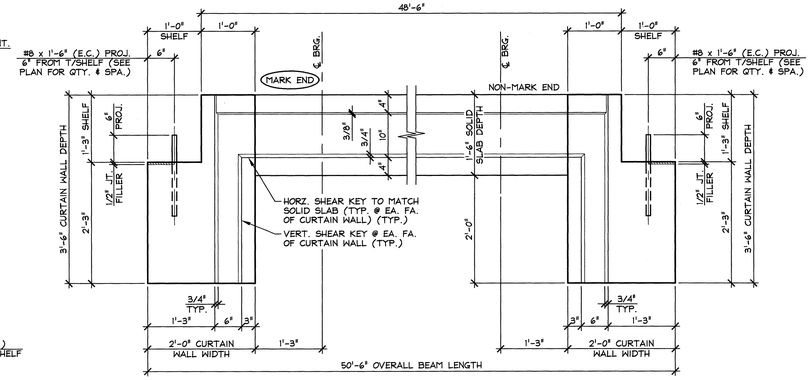

4 CW1 DIMENSIONAL ELEVATION
3/4" = 1'-0"

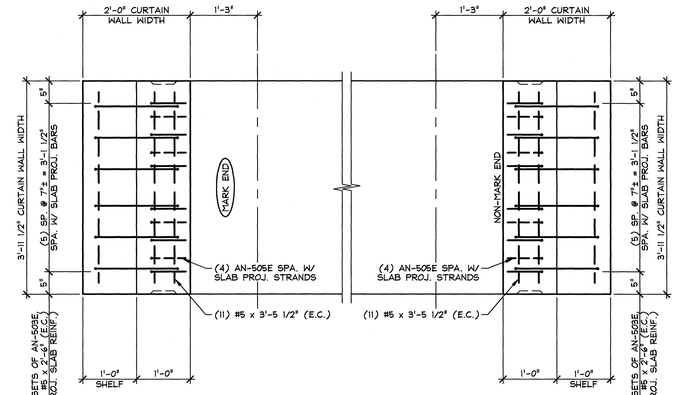

5 CW1 REINFORCING PLAN VIEW IN FORM
3/4" = 1'-0"

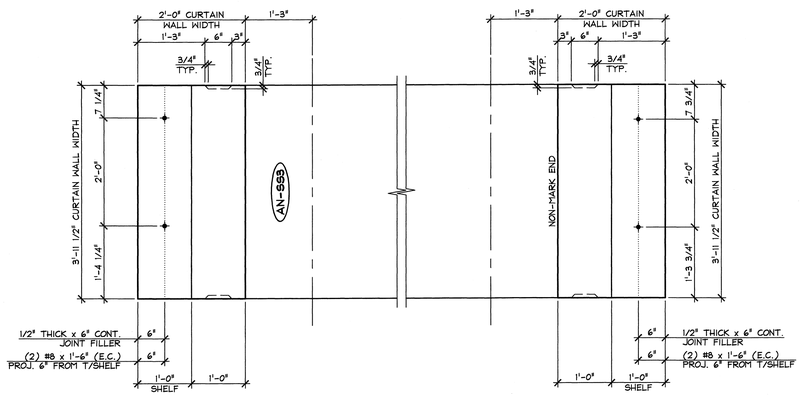

2 CW1 DIMENSIONAL PLAN VIEW IN FORM
3/4" = 1'-0"

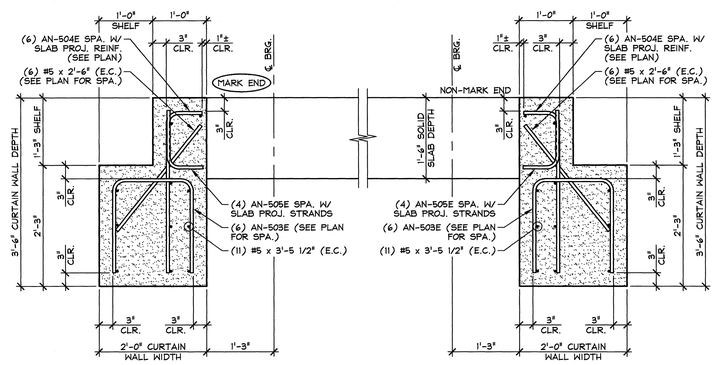

6 CW1 REINFORCING SECTION
3/4" = 1'-0"

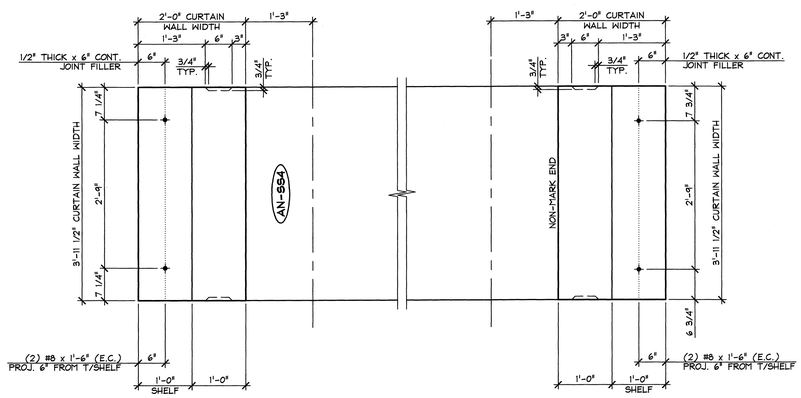

3 CW1 DIMENSIONAL PLAN VIEW IN FORM
3/4" = 1'-0"

10.01 cy = SOLID SLAB
0.84 cy = CURTAIN WALL (MARK END)
0.84 cy = CURTAIN WALL (NON-MARK END)
11.69 cy = TOTAL SLAB VOL.

20.27 T = SOLID SLAB
1.71 T = CURTAIN WALL (MARK END)
1.71 T = CURTAIN WALL (NON-MARK END)
23.69 T = TOTAL SLAB WT.

MARK:	AN-SS1	QTY.:	1
MARK:	AN-SS3	QTY.:	1
MARK:	AN-SS4	QTY.:	1

SHOP NOTE:
TOP OF CURTAIN WALL SHALL RECEIVE A FINISH MATCHING SOLID SLAB.

MATERIAL LIST / CURTAIN WALL

ITEM	MARK	DESCRIPTION	QTY./CURTAIN WALL	
			MARK END	NON-MARK END
1	AN-503E	#5 BENT BAR (LEVEL 1, EPOXY COATED)	6	6
2	AN-504E	#5 BENT BAR (LEVEL 1, EPOXY COATED)	6	6
3	AN-505E	#5 BENT BAR (LEVEL 1, EPOXY COATED)	4	4
4		#5 x 2'-6" (LEVEL 1, EPOXY COATED)	6	6
5		#5 x 3'-5 1/2" (LEVEL 1, EPOXY COATED)	11	11
6				
7		#8 x 1'-6" (LEVEL 1, EPOXY COATED)	2	2
8				

APPROVAL STAMP:

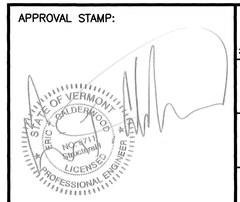

J.P. CARRARA & SONS INC.
Precast & Prestress Manufacturer
2464 CASE STR., MIDDLEBURY, VERMONT 05753 Phone:(802)388-6361 Fax:(802)388-9010

RENAUD BROS, INC.
CONTRACTOR
VERNON, VERMONT

STATE OF VERMONT AGENCY OF TRANSPORTATION
COUNTY OF WINDSOR

TOWN OF ANDOVER
VT RTE 11, RURAL MINOR ARTERIAL
BRIDGE NO.: 41 PROJECT NO.: BHF 016-1(29)

PRECAST CURTAIN WALL DETAILS

DATE: MAY 6, 2015
SCALE: NOTED
CHKD: J.C. DFTM: B.L.
JOB NO: 23465-015
DWG. NO: CW1

F:\VT-Bridges\23465-15 Andover 41\23465-CW1.dwg, 5/12/2015 4:56:16 PM

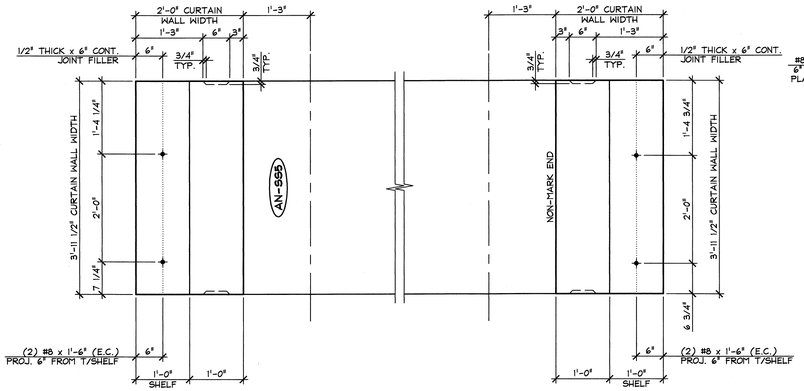

1 CW2 DIMENSIONAL PLAN VIEW IN FORM
3/4" = 1'-0"

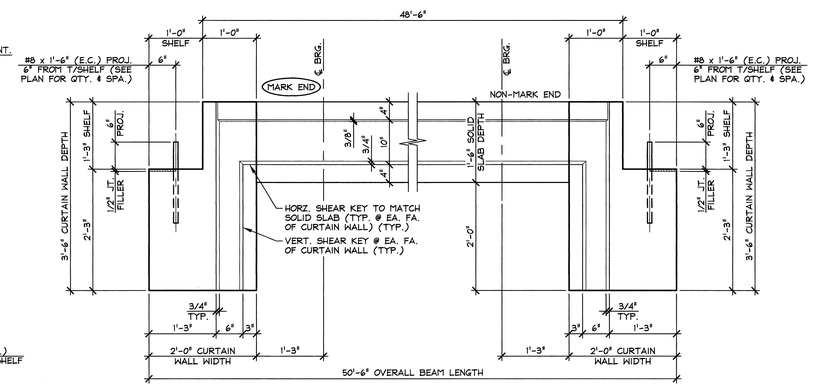

4 CW2 DIMENSIONAL ELEVATION
3/4" = 1'-0"

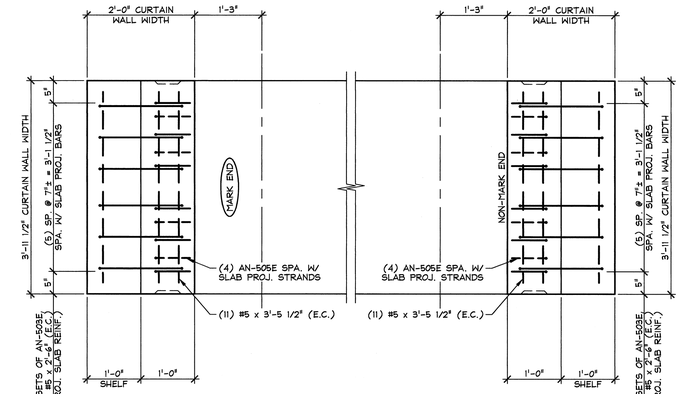

5 CW2 REINFORCING PLAN VIEW IN FORM
3/4" = 1'-0"

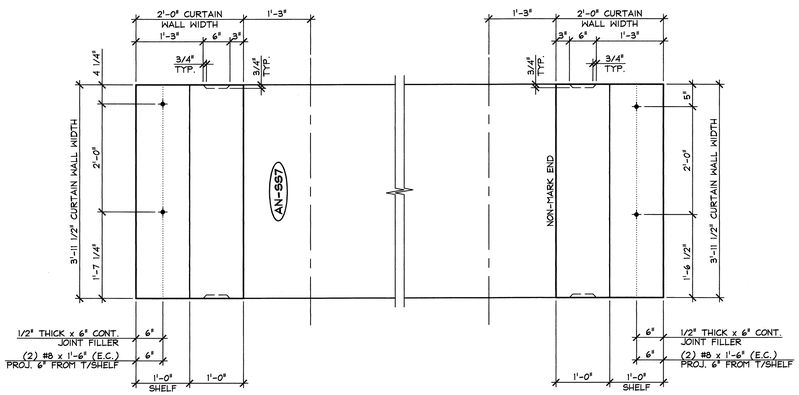

2 CW2 DIMENSIONAL PLAN VIEW IN FORM
3/4" = 1'-0"

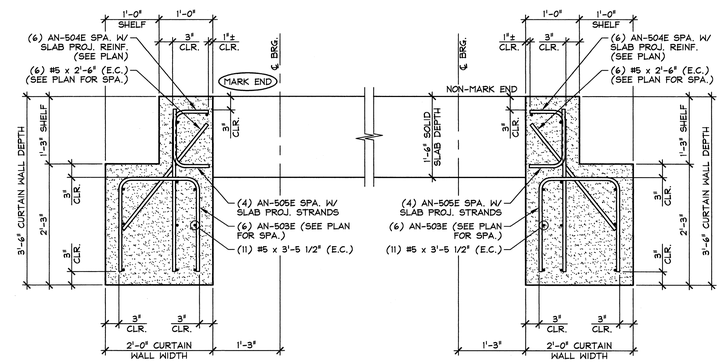

6 CW2 REINFORCING SECTION
3/4" = 1'-0"

THIS PLAN NOT USED

3 CW2 DIMENSIONAL PLAN VIEW IN FORM
3/4" = 1'-0"

10.01 cy = SOLID SLAB
0.84 cy = CURTAIN WALL (MARK END)
0.84 cy = CURTAIN WALL (NON-MARK END)
11.69 cy = TOTAL SLAB VOL.

20.27 T = SOLID SLAB
1.71 T = CURTAIN WALL (MARK END)
1.71 T = CURTAIN WALL (NON-MARK END)
23.69 T = TOTAL SLAB WT.

MARK:	QTY.:
AN-SS5	1
AN-SS7	1

SHOP NOTE:
TOP OF CURTAIN WALL SHALL RECEIVE A FINISH MATCHING SOLID SLAB.

MATERIAL LIST / CURTAIN WALL

ITEM	MARK	DESCRIPTION	QTY./CURTAIN WALL	
			MARK END	NON-MARK END
1	AN-503E	#5 BENT BAR (LEVEL I, EPOXY COATED)	6	6
2	AN-504E	#5 BENT BAR (LEVEL I, EPOXY COATED)	6	6
3	AN-505E	#5 BENT BAR (LEVEL I, EPOXY COATED)	4	4
4		#5 x 2'-6" (LEVEL I, EPOXY COATED)	6	6
5		#5 x 3'-5 1/2" (LEVEL I, EPOXY COATED)	11	11
6				
7		#8 x 1'-6" (LEVEL I, EPOXY COATED)	2	2
8				

APPROVAL STAMP:

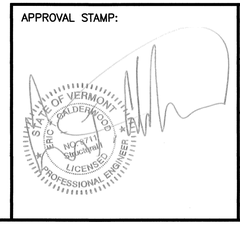

J.P. CARRARA & SONS INC.
Precast & Prestress Manufacturer
2464 CASE STR., MIDDLEBURY, VERMONT 05753 Phone:(802)388-6361 Fax:(802)388-9010

RENAUD BROS, INC.
CONTRACTOR
VERNON, VERMONT

STATE OF VERMONT AGENCY OF TRANSPORTATION
COUNTY OF WINDSOR

TOWN OF ANDOVER
VT RTE 11, RURAL MINOR ARTERIAL
BRIDGE NO.: 41 PROJECT NO.: BHF 016-1(29)

PRECAST CURTAIN WALL DETAILS

DATE: MAY 6, 2015
SCALE: NOTED
CHKD: J.C. DFTM: B.L.
JOB NO: 23465-015
DWG. NO: CW2

F:\VT-Bridges\23465-15 Andover 41\23465-CW2.dwg, 5/12/2015 4:57:35 PM

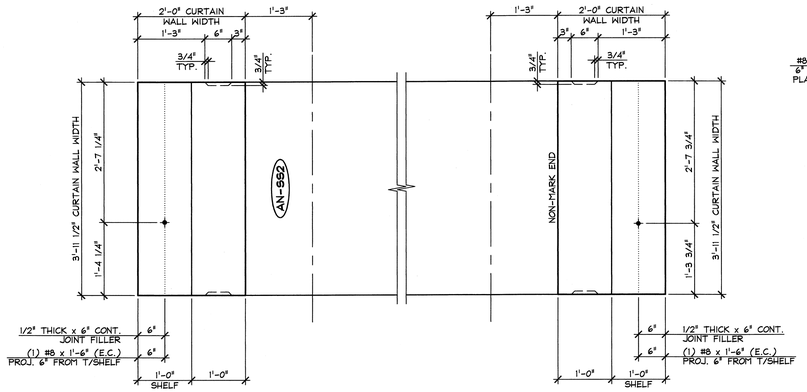

1 CW3 DIMENSIONAL PLAN VIEW IN FORM
3/4" = 1'-0"

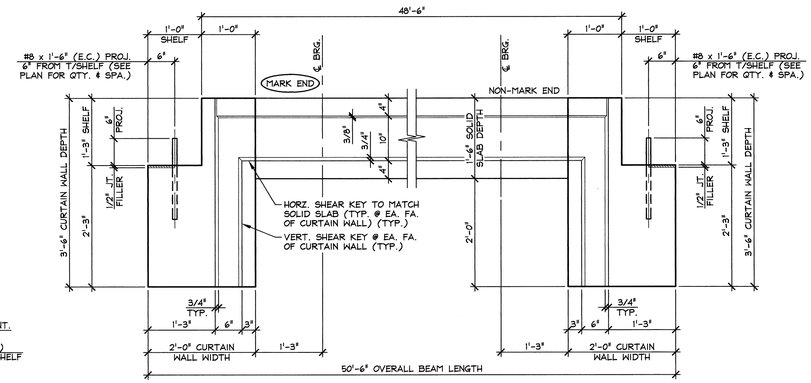

4 CW3 DIMENSIONAL ELEVATION
3/4" = 1'-0"

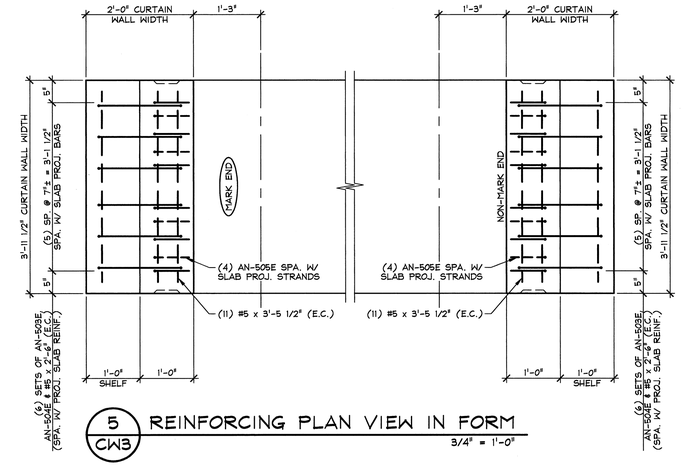

5 CW3 REINFORCING PLAN VIEW IN FORM
3/4" = 1'-0"

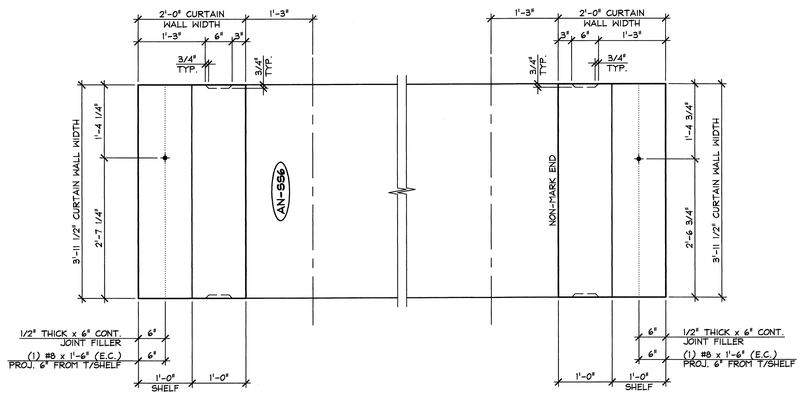

2 CW3 DIMENSIONAL PLAN VIEW IN FORM
3/4" = 1'-0"

THIS PLAN NOT USED

3 CW3 DIMENSIONAL PLAN VIEW IN FORM
3/4" = 1'-0"

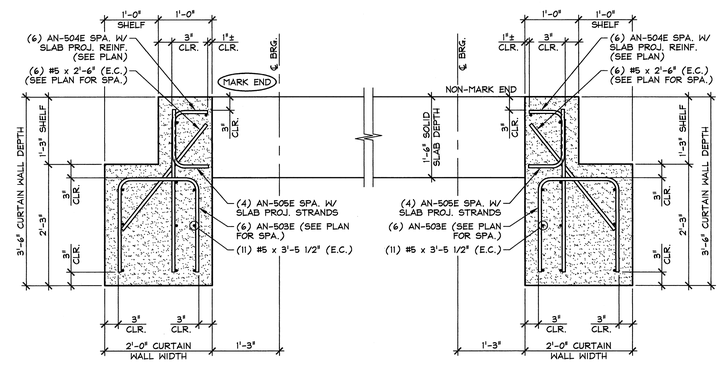

6 CW3 REINFORCING SECTION
3/4" = 1'-0"

MARK:	AN-SS2	QTY.:	1
MARK:	AN-SS6	QTY.:	1
MARK:		QTY.:	

SHOP NOTE:
TOP OF CURTAIN WALL SHALL RECEIVE A FINISH MATCHING SOLID SLAB.

10.01 cy = SOLID SLAB
0.84 cy = CURTAIN WALL (MARK END)
0.84 cy = CURTAIN WALL (NON-MARK END)
11.69 cy = TOTAL SLAB VOL.

20.27 T = SOLID SLAB
1.71 T = CURTAIN WALL (MARK END)
1.71 T = CURTAIN WALL (NON-MARK END)
23.69 T = TOTAL SLAB WT.

MATERIAL LIST / CURTAIN WALL

ITEM	MARK	DESCRIPTION	QTY./CURTAIN WALL	
			MARK END	NON-MARK END
1	AN-503E	#5 BENT BAR (LEVEL 1, EPOXY COATED)	6	6
2	AN-504E	#5 BENT BAR (LEVEL 1, EPOXY COATED)	6	6
3	AN-505E	#5 BENT BAR (LEVEL 1, EPOXY COATED)	4	4
4		#5 x 2'-6" (LEVEL 1, EPOXY COATED)	6	6
5		#5 x 3'-5 1/2" (LEVEL 1, EPOXY COATED)	11	11
6				
7		#8 x 1'-6" (LEVEL 1, EPOXY COATED)	1	1
8				

APPROVAL STAMP:

STATE OF VERMONT — ERIC J. GOLDENCOFF — NO. 9411 — LICENSED — PROFESSIONAL ENGINEER

J.P. CARRARA & SONS INC.
Precast & Prestress Manufacturer
2464 CASE STR., MIDDLEBURY, VERMONT 05753 Phone:(802)388-6361 Fax:(802)388-9010

RENAUD BROS, INC.
CONTRACTOR
VERNON, VERMONT

STATE OF VERMONT AGENCY OF TRANSPORTATION
COUNTY OF WINDSOR

TOWN OF ANDOVER
VT RTE 11, RURAL MINOR ARTERIAL
BRIDGE NO.: 41 PROJECT NO.: BHF 016-1(29)

PRECAST CURTAIN WALL DETAILS

DATE: MAY 6, 2015
SCALE: NOTED
CHKD: J.C. DFTM: B.L.
JOB NO: 23465-015
DWG. NO: CW3

F:\VT-Bridges\23465-15 Andover 41\23465-CW3.dwg, 5/12/2015 5:03:21 PM

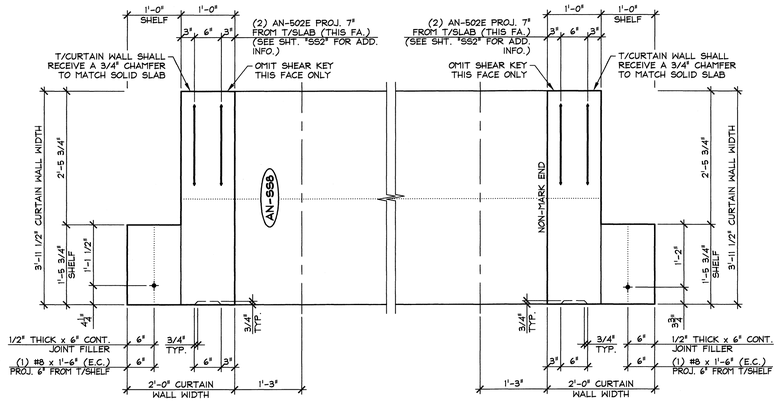

1 CW4 DIMENSIONAL PLAN VIEW IN FORM
3/4" = 1'-0"

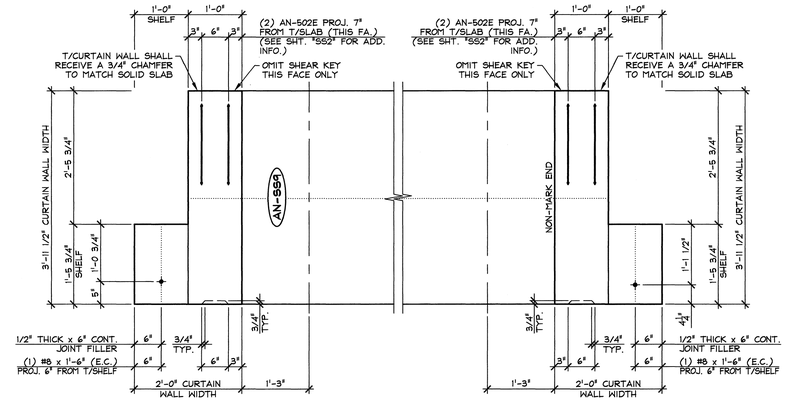

2 CW4 DIMENSIONAL PLAN VIEW IN FORM
3/4" = 1'-0"

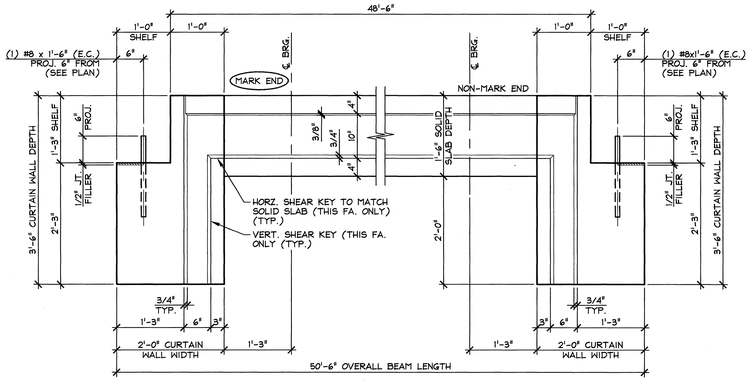

3 CW4 DIMENSIONAL ELEVATION
3/4" = 1'-0"

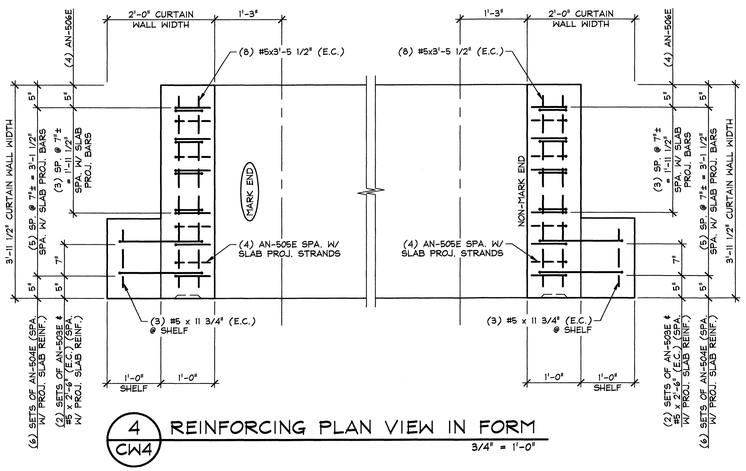

4 CW4 REINFORCING PLAN VIEW IN FORM
3/4" = 1'-0"

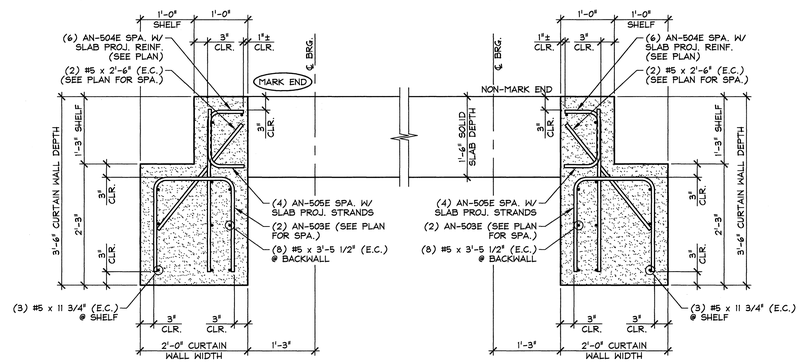

5 CW4 REINFORCING SECTION
3/4" = 1'-0"

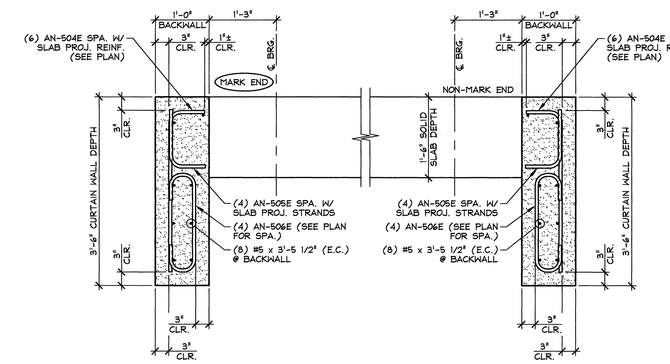

6 CW4 REINFORCING SECTION
3/4" = 1'-0"

MARK:	AN-SS8	QTY.:	1
MARK:	AN-SS9	QTY.:	1

SHOP NOTE:
TOP OF CURTAIN WALL SHALL RECEIVE A FINISH MATCHING SOLID SLAB.

10.11 cy = SOLID SLAB
0.64 cy = CURTAIN WALL (MARK END)
0.64 cy = CURTAIN WALL (NON-MARK END)
11.39 cy = TOTAL SLAB VOL.

20.48 T = SOLID SLAB
1.29 T = CURTAIN WALL (MARK END)
1.29 T = CURTAIN WALL (NON-MARK END)
23.06 T = TOTAL SLAB WT.

MATERIAL LIST / CURTAIN WALL

ITEM	MARK	DESCRIPTION	QTY./CURTAIN WALL	
			MARK END	NON-MARK END
1	AN-502E	#5 BENT BAR (LEVEL 1, EPOXY COATED)	2	2
2	AN-503E	#5 BENT BAR (LEVEL 1, EPOXY COATED)	2	2
3	AN-504E	#5 BENT BAR (LEVEL 1, EPOXY COATED)	6	6
4	AN-505E	#5 BENT BAR (LEVEL 1, EPOXY COATED)	4	4
5	AN-506E	#5 BENT BAR (LEVEL 1, EPOXY COATED)	6	6
6		#5 x 2'-6" (LEVEL 1, EPOXY COATED)	2	2
7		#5 x 3'-5 1/2" (LEVEL 1, EPOXY COATED)	8	8
8		#5 x 11 3/4" (LEVEL 1, EPOXY COATED)	3	3
9				
10		#8 x 1'-6" (LEVEL 1, EPOXY COATED)	1	1

APPROVAL STAMP:

STATE OF VERMONT — ERIC J. GOLDENWOOD — NO. 9411 — LICENSED PROFESSIONAL ENGINEER

J.P. CARRARA & SONS INC.
Precast & Prestress Manufacturer
2464 CASE STR., MIDDLEBURY, VERMONT 05753 Phone:(802)388-6361 Fax:(802)388-9010

RENAUD BROS, INC.
CONTRACTOR
VERNON, VERMONT

STATE OF VERMONT AGENCY OF TRANSPORTATION
COUNTY OF WINDSOR

DATE: MAY 6, 2015
SCALE: NOTED

TOWN OF ANDOVER
VT RTE 11, RURAL MINOR ARTERIAL
BRIDGE NO.: 41 PROJECT NO.: BHF 016-1(29)

CHKD: J.C. DFTM: B.L.
JOB NO: 23465-015

PRECAST CURTAIN WALL DETAILS

DWG. NO: CW4

F:\VT-Bridges\23465-15 Andover 41\23465-CW4.dwg, 5/12/2015 5:05:52 PM

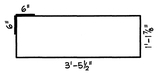

AN-401E
#4 BENT BAR
LEVEL I (EPOXY COATED)
USE 2"Φ (50 mm) PIN
(603) REQ'D.

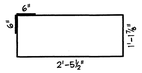

AN-402E
#4 BENT BAR
LEVEL I (EPOXY COATED)
USE 2"Φ (50 mm) PIN
(180) REQ'D.

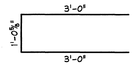

AN-403E
#4 BENT BAR
LEVEL I (EPOXY COATED)
USE 2"Φ (50 mm) PIN
(72) REQ'D.

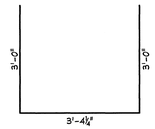

AN-404E
#4 BENT BAR
LEVEL I (EPOXY COATED)
USE 2"Φ (50 mm) PIN
(36) REQ'D.

THIS DETAIL NOT USED

AN-501E

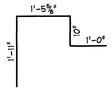

AN-502E
#5 BENT BAR
LEVEL I (EPOXY COATED)
USE 2¾"Φ (70 mm) PIN
(154) REQ'D.

AN-503E
#5 BENT BAR
LEVEL I (EPOXY COATED)
USE 2¾"Φ (70 mm) PIN
(92) REQ'D.

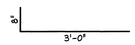

AN-504E
#5 BENT BAR
LEVEL I (EPOXY COATED)
USE 2¾"Φ (70 mm) PIN
(108) REQ'D.

AN-505E
#5 BENT BAR
LEVEL I (EPOXY COATED)
USE 2¾"Φ (70 mm) PIN
(72) REQ'D.

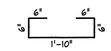

AN-506E
#5 BENT BAR
LEVEL I (EPOXY COATED)
USE 2¾"Φ (70 mm) PIN
(24) REQ'D.

MISCELLANEOUS MATERIALS

ITEM	MARK	QTY.	DESCRIPTION	REMARKS
1	EM-AN1	6	3/4" THICK x 6" x 6" W/ (1) 2"Φ HOLE (GALV.)	FOR ERECTION; SEE DETAIL THIS SHEET
2		6	0.60"Φ SINGLE USE STRESSING CHUCK	FOR ERECTION
3		3	0.60"Φ x 270 KSI x 38'-9" LONG POLYSTRAND	FOR ERECTION
4		24	COMPRESSIBLE SEALER SELF ADHESIVE	FOR ERECTION
5				
6				
7				
8		54	#5 x 50'-0" (LEVEL I, EPOXY COATED)	
9				
10	MK-AN2	22	DAYTON C-24 TYPE 4-APR DECK FORM HANGER	GALVANIZE
11		36	SET OF TRIPLE 1/2"Φ STRAND LIFTING LOOPS	
12				
13				
14				
15		92	#5 x 2'-6" (LEVEL I, EPOXY COATED)	CAST INTO CURTAIN WALL
16		186	#5 x 3'-5 1/2" (LEVEL I, EPOXY COATED)	CAST INTO CURTAIN WALL
17		12	#5 x 11 3/4" (LEVEL I, EPOXY COATED)	CAST INTO CURTAIN WALL
18				
19		28	#8 x 1'-6" (LEVEL I, EPOXY COATED)	CAST INTO CURTAIN WALL
20				

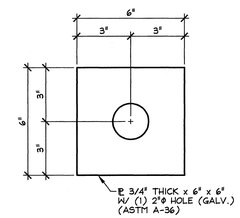

EM - AN1
3" = 1'-0"

APPROVAL STAMP:

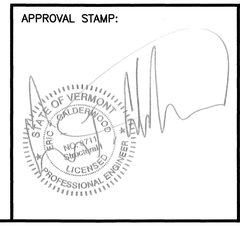

J.P. CARRARA & SONS INC.
Precast & Prestress Manufacturer
2464 CASE STR., MIDDLEBURY, VERMONT 05753 Phone:(802)388-6361 Fax:(802)388-9010

RENAUD BROS, INC.
CONTRACTOR
VERNON, VERMONT

STATE OF VERMONT AGENCY OF TRANSPORTATION
COUNTY OF WINDSOR

TOWN OF ANDOVER
VT RTE 11, RURAL MINOR ARTERIAL
BRIDGE NO.: 41 PROJECT NO.: BHF 016-1(29)

MATERIALS LIST

DATE: MAY 6, 2015
SCALE: NOTED
CHKD: J.C. DFTM: B.L.
JOB NO: 23465-015
DWG. NO: M1

F:\VT-Bridges\23465-15 Andover 4\123465-M1.dwg, 5/12/2015 5:07:35 PM

CALDERWOOD ENGINEERING
222 RIVER ROAD
RICHMOND, ME 04357
PH. (207) 737-2007 FAX (207) 737-2008

Andover, VT Bridge Superstructure Design
REV01

*Prestressed, 9 plank solid rectangular sections, 3'-11.5" 44' CL bearing to CL bearing span**, 46'-6" beam O.A.,***
3 in bituminous surface, Bridge Railing Galvanized 2 rail box beam standard S-360A

Check: Strength 1, Service 1, Service 3, Fatigue 1

Notes: HS-20, truck tandem

Deck Superstructure type (g) AASHTO LRFD Table 4.6.2.2.1-1

Reference: AASHTO LRFD Bridge Design Specifications, Seventh Edition, 2014; PCI Design Handbook

Section Properties

Span: $L_{bear} := 44.0\ ft$

CL bearing to CL bearing

Beam length $L_{total} := L_{bear} + 15\ in \cdot 2 = 46.5\ ft$

Section Type: 47.5" Wide X 18" Deep Solid Slab

Depth: $h := 18\ in$

Width: $b := 47.5\ in$

Number of beams $N_b := 9$

Total bridge width $W := b \cdot N_b + (N_b - 1) \cdot \frac{1}{2}\ in = 35.958\ ft$ *(2) 11.5' travel lanes*

Thickness of Shear Key $t_{shearkey} := 0.75\ in$

Solid Section Properties

Gross Area of Solid Section $A_g := h \cdot b = 855\ in^2$

Moment of Inertia of Solid Section
(interior beam, no curb) $I_x := \frac{b \cdot h^3}{12} = 23085\ in^4$ $I_y := \frac{h \cdot b^3}{12} = 160757.813\ in^4$

Polar Moment of Inertia $I_p := I_x + I_y = 183842.813\ in^4$

St. Venant's Torsional Intertia,
for solid sections per C4.6.2.2.1-2
LRFD 2014 $J := \frac{A_g^4}{40 \cdot I_p} = 72670.44\ in^4$

Extreme fiber to CG $y_b := \frac{h}{2}$ $y_t := y_b$

Section Modulus Interior Beam
(no curb) $S_b := \frac{I_x}{y_b}$ $S_b = 2565\ in^3$ $S := S_b$

$S_t := \frac{I_x}{y_t}$ $S_t = 2565\ in^3$

CALDERWOOD ENGINEERING
222 RIVER ROAD
RICHMOND, ME 04357
PH. (207) 737-2007 FAX (207) 737-2008

Concrete Properties @ Service Load:

28 day concrete compressive strength $f'_c := 6\ ksi$ $\sqrt{f'_c \cdot ksi} = 2.449\ ksi$

normal weight concrete with rebar, unit weight $\gamma_c := 0.150\ \frac{kip}{ft^3}$

correction factor for source of aggregate, taken as 1 (5.4.2.4) $K_1 := 1.0$

Concrete elastic modulus (5.4.2.4-1) $E_c := 33000 \cdot K_1 \cdot \left(\left(\frac{\gamma_c}{\frac{kip}{ft^3}}\right)^{1.5}\right) \cdot \sqrt{f'_c \cdot ksi}$ $E_c = 4695.98\ ksi$

$E_c = 4695982.325\ psi$

Concrete Properties @ Prestress Transfer:

Concrete compressive strength at release $f'_{ci} := 4\ ksi$

Concrete modulus of elasticity at realease $E_{ci} := 33000 \cdot K_1 \cdot \left(\left(\frac{\gamma_c}{\frac{kip}{ft^3}}\right)^{1.5}\right) \cdot \sqrt{f'_{ci} \cdot ksi}$ $E_{ci} = 3834.25\ ksi$

Prestressing Tendons:

Prestressing method: ***pretensioning***

Tendon Profile

0.6-in diameter strand $d_b := 0.6\ in$

Number of strands $N_{ps} := 22$

Area of prestressing steel $A_{strand} := 0.217\ in^2$ $A_{ps} := A_{strand} \cdot N_{ps} = 4.774\ in^2$

Type of relaxation:
low relaxation strand

Specified tensile strength of tendon $f_{pu} := 270\ ksi$

Specified yield limit for strands

Modulus of Elasticity $E_{ps} := 28500\ ksi$

CALDERWOOD ENGINEERING
222 RIVER ROAD
RICHMOND, ME 04357
PH. (207) 737-2007 FAX (207) 737-2008

Self weight dead load (DC, DW)

Self weight dead load $w_g := A_g \cdot \gamma_c = 0.891 \ \frac{kip}{ft}$

Superimposed dead load

3" bituminous wearing surface (VTrans Structures Design Manual 5th Edition Table 3.3.1) $w_{ws} := 3 \ in \cdot 0.150 \ \frac{kip}{ft^3} \cdot b = 0.148 \ \frac{kip}{ft}$

Rail Weight (Bridge Rail Galvanized 2 Rail Box Beam Standard S-360A) $w_{rail} := 50 \ plf$

50plf (without curb) $w_{curb} := \gamma_c \cdot (2 \ ft \cdot 7 \ in) = 175 \ plf$

exterior beams carry 60%, interior beams carry 40%

Interior beams carry 40% $w_{bint} := 2 \cdot (w_{rail} + w_{curb}) \cdot \frac{0.40}{7} = 0.026 \ klf$

Exterior beams carry 60% $w_{bext} := 2 \cdot (w_{rail} + w_{curb}) \cdot \frac{0.60}{2} = 0.135 \ klf$

Unfactored Bending moment at mid-span

Self Weight $M_g := \frac{w_g \cdot L_{bear}^2}{8}$ $M_g = 215.531 \ kip \cdot ft$

Wear Surface $M_{ws} := \frac{w_{ws} \cdot L_{bear}^2}{8}$ $M_{ws} = 35.92 \ kip \cdot ft$

Rail - Interior Beam $M_{bint} := \frac{w_{bint} \cdot L_{bear}^2}{8}$ $M_{bint} = 6.22 \ kip \cdot ft$

Rail - Exterior Beam $M_{bext} := \frac{w_{bext} \cdot L_{bear}^2}{8}$ $M_{bext} = 32.67 \ kip \cdot ft$

CALDERWOOD ENGINEERING
222 RIVER ROAD
RICHMOND, ME 04357
PH. (207) 737-2007 FAX (207) 737-2008

Unfactored Shear at Supports

Self Weight - Interior Beam $V_g := \frac{w_g \cdot L_{bear}}{2}$ $V_g = 19.594\ kip$

Wear Surface - Interior Beam $V_{ws} := \frac{w_{ws} \cdot L_{bear}}{2}$ $V_{ws} = 3.266\ kip$

Rail - Interior Beam $V_{bint} := \frac{w_{bint} \cdot L_{bear}}{2}$ $V_{bint} = 0.566\ kip$

Rail - Exterior Beam $V_{bext} := \frac{w_{bext} \cdot L_{bear}}{2}$ $V_{bext} = 2.97\ kip$

see 048-br-15 Calculations/Dead Load

CALDERWOOD ENGINEERING
222 RIVER ROAD
RICHMOND, ME 04357
PH. (207) 737-2007 FAX (207) 737-2008

Distribution Factor Method for Moment (AASHTO LRFD 4.6.2.2.2)

Table 4.6.2.2.2b-1 Distribution of Live Load for Moment, Interior Beams
concrete beams used in multibeam decks (g), two design lanes loaded

---

Two design lanes loaded:
Number of beams (Nb)
defined above

$k := 2.5 \cdot N_b^{-0.2} = 1.611$

$\text{Checkk} := \text{if } k \geq 1.5 \;\|\; \text{"OK"} \;\; \text{else} \;\|\; \text{"k=1.5"}$

$\text{Checkk} = \text{"OK"}$

$J = 72670.444 \text{ in}^4$

$I_x = 23085 \text{ in}^4$

$L_{bear} = 44 \text{ ft}$

Interior Moment Distribution Factor (gmint)
per table 4.6.2.2.2b-1, type g, two design
lanes page 4-37 (LRFD 2014)

$$g_{mint} := k \cdot \left(\frac{\left(\frac{b}{in}\right)}{305}\right)^{0.6} \cdot \left(\frac{b \cdot 12}{12.0 \cdot L_{bear}}\right)^{0.2} \cdot \left(\frac{I_x}{J}\right)^{0.06} \qquad g_{mint} = 0.304$$

NOTE: factor of 12 included above to account for MATHCAD correcting units, AASHTO already accounts for difference in units with included factor, e.g. b (inches), Lbear (feet)

Table 4.6.2.2.2d-1 Distribution of Live Load for Moment, Exterior Beams
concrete beams used in multibeam decks (g), two design lanes loaded
two 11'-6" lanes + 4'-6" shoulders => two 16' lanes + 2' curbs => 36' overall width

overall width of the bridge $\qquad W = 35.958 \text{ ft}$

rail guard width (inboard distance
from center of beam) $\qquad b_{rail} := 0.5 \text{ ft}$

Exterior Moment Distribution Factor (gmext)

Note: distance de shall be taken as positive if the exterior web is inboard of the interior face of the traffic railing (4.6.2.2.2d-Exterior Beams)

$$d_e := \frac{b}{2} - b_{rail} \qquad d_e = 1.479 \text{ ft}$$

for de< 2.0, OK

For concrete box beams used in multibeam decks
(em > 1.0)

$$e_m := 1.04 + \frac{d_e}{25 \cdot \text{ft}} \qquad e_m = 1.099$$

$$g_{mext} := e_m \cdot g_{mint} \qquad g_{mext} = 0.335$$

Max. Moment Load Distribution factor $\qquad g_m := \max(g_{mint}, g_{mext}) \qquad g_m = 0.335$

CALDERWOOD ENGINEERING
222 RIVER ROAD
RICHMOND, ME 04357
PH. (207) 737-2007 FAX (207) 737-2008

Distribution Factor Method for Shear (AASHTO LRFD 4.6.2.2.3)

Table 4.6.2.2.3a-1 Distribution of Live Load for Shear, Interior Beams
concrete beams used in multibeam decks (g), one design lane loaded

Interior Shear Distribution Factor

Based on 4.6.2.2.3a Interior beams, the values of b, L, Nb, J and I comply with the ranges of applicability given in table 4.6.2.2.3a

$b = 47.5\ in$

$L_{bear} = 44\ ft$

$N_b = 9$

$J = 72670.444\ in^4$

$I_x = 23085\ in^4$ Therefore, Table 4.6.2.2.3a-1 is applicable

$$g_{vint} := \left(\frac{\left(\frac{b}{in}\right)}{156}\right)^{0.4} \cdot \left(\frac{b \cdot 12}{12.0 \cdot L_{bear}}\right)^{0.1} \cdot \left(\frac{I_x}{J}\right)^{0.05} \cdot \left(\frac{\left(\frac{b}{in}\right)}{48}\right) \qquad g_{vint} = 0.456$$

Exterior Shear Distribution Factor

Table 4.6.2.2.3b-1, applicable cross section (g) $d_e = 1.479\ ft$ conservative

Note: distance de shall be taken as positive if the exterior web is inboard of the interior face of the traffic railing (4.6.2.2.2d-Exterior Beams)

For concrete box beams used in multibeam decks

$$e_v := 1.0 + \left(\frac{d_e + \frac{b}{12} - 2.0\ in}{40 \cdot ft}\right)^{0.5} \qquad e_v = 1.203$$

$$g_{vext} := e_v \cdot g_{vint} \cdot 1.0 \qquad g_{vext} = 0.549$$

Skew correction for Shear Table 4.6.2.2.3c-1 $\theta := 0\ °$

$$skewfactor := 1.0 + \frac{12.0 \cdot \left(\frac{L_{bear}}{ft}\right)}{90 \cdot \left(\frac{h}{in}\right)} \cdot \sqrt{\tan(\theta)}$$

$skewfactor = 1.0$

$g_{vint} := g_{vint} \cdot skewfactor \qquad g_{vint} = 0.456$

$g_{vext} := g_{vext} \cdot skewfactor \qquad g_{vext} = 0.549 \qquad g_v := \max(g_{vint}, g_{vext}) \qquad g_v = 0.549$

DISTRIBUTION FACTORS

$g_{mint} = 0.304 \qquad g_{vint} = 0.456$

$g_{mext} = 0.335 \qquad g_{vext} = 0.549$

USER NOTE: Input max distribution factors to excel sheets for int. & ext. Live Load Moment and Shear calcs.

CALDERWOOD ENGINEERING
222 RIVER ROAD
RICHMOND, ME 04357
PH. (207) 737-2007 FAX (207) 737-2008

Live Loads AASHTO LRFD 3.6:

3.6.1.2 Design Vehicular Live Load HL-93 consists of a combination of

- design truck **or** design tandem **and**
- design lane load

Design Truck: spacing between two 32kip axles varied between 14ft & 30ft to produce extreme force effects. We calculate at 44 locations for 44ft span.

number of design lanes: 2

filepath to calculations: ".\048-br-15_CALCULATIONS.xlsx"

HS-20 Load Results assume 2 design lanes loaded, multipresence factor = 1.0 for two lanes loaded (AASHTO LRFD 3.6.1.1.2-1)

HS20 := READEXCEL (".\048-br-15_CALCULATIONS.xlsx" , "HS-20 (Controls)!K8:K9")

$$HS20 = \begin{bmatrix} 520.727 \\ 56.727 \end{bmatrix}$$

$$M_{HS20} := HS20_{0,0}\ kip \cdot ft = 520.727\ kip \cdot ft \qquad V_{HS20} := HS20_{1,0}\ kip = 56.727\ kip$$

Tandem Truck

Tandem := READEXCEL (".\048-br-15_CALCULATIONS.xlsx" , "Tandem !K8:K9")

$$Tandem = \begin{bmatrix} 501.136 \\ 47.727 \end{bmatrix}$$

$$M_{tand} := Tandem_{0,0}\ kip \cdot ft = 501.14\ kip \cdot ft \qquad V_{tand} := Tandem_{1,0}\ kip = 47.73\ kip$$

HS-20 Design Truck controls for both shear and moment, before factors applied.

Lane Loads (3.6.1.2.4): Shall consist of a load of 0.64 klf uniformly distributed in longitudinal direction. Transversely, design lane load shall be assumed uniformly distributed over a 10ft width.

Strength 1

Load Factors Per AASHTO LRFD

$$\gamma_{LL} := 1.75 \qquad \gamma_{DC} := 1.25 \qquad \gamma_{DW} := 1.5 \qquad I.M. := 1.33$$

EXTERIOR BEAM MOMENTS

EXTERIOR BEAM MOMENT Load Case	Mg (k-ft)	Mb (ext) (k-ft)	Mws (k-ft)	M(LL+IM) (k-ft)	M(DC) (k-ft)	M(WS) (k-ft)	M(LL+IM) (k-ft)2	Mtotal (k-ft)
Strength 1	269.41	27.23	53.88	496.82	296.64	53.88	496.82	847.34
Service 1	215.53	21.78	35.92	283.89	237.31	35.92	283.89	557.13
Service 3	215.53	21.78	35.92	227.12	237.31	35.92	227.12	500.35

$M_{railS1} = 21.78\ kip \cdot ft$ $M_{gS1} = 215.53\ kip \cdot ft$ $M_{wsS1} = 35.92\ kip \cdot ft$

$M_{LLIMS1} = 283.89\ kip \cdot ft$ $M_{TS3} = 500.35\ kip \cdot ft$ $M_{uSTR1} = 847.34\ kip \cdot ft$

$M_{TS1} := 557.13\ kip \cdot ft$

INTERIOR BEAM MOMENTS

INTERIOR BEAM Load Case	Mg (k-ft)	Mrail (int) (k-ft)	Mws (k-ft)	M(LL+IM) (k-ft)	M(DC) (k-ft)	M(WS) (k-ft)	M(LL+IM) (k-ft)2	Mtotal (k-ft)
Strength 1	269.41	40.84	53.88	450.84	310.25	53.88	450.84	814.98
Service 1	215.53	32.67	35.92	257.62	248.20	35.92	257.62	541.75
Service 3	215.53	32.67	35.92	206.10	248.20	35.92	206.10	490.22

EXTERIOR BEAM SHEAR

EXTERIOR BEAM SHEAR Load Case	Vg (k)	Vrail (ext) (k)	Vws (k)	V(LL+IM) (k)	V(DC) (k)	V(WS) (k)	V(LL+IM) (k)2	Vtotal (k)
Strength 1	24.49	2.48	4.90	86.01	26.97	4.90	86.01	117.88
Service 1	19.59	1.98	3.27	49.15	21.57	3.27	49.15	73.99
Service 3	19.59	1.98	3.27	39.32	21.57	3.27	39.32	64.16

$V_{uext} = 117.88\ kip$ $V_{TS1} := 73.99\ kip$

INTERIOR BEAM SHEAR

INTERIOR BEAM SHEAR Load Case	Vg (k)	Vrail (int) (k)	Vws (k)	V(LL+IM) (k)	V(DC) (k)	V(WS) (k)	V(LL+IM) (k)2	Vtotal (k)
Strength 1	24.49	3.71	4.90	71.44	28.20	4.90	71.44	104.55
Service 1	19.59	2.97	3.27	40.82	22.56	3.27	40.82	66.65
Service 3	19.59	2.97	3.27	32.66	22.56	3.27	32.66	58.49

$V_{uint} = 104.55\ kip$

Exterior Beams Control & the Interior Beams have a smaller section, Therefore check the maximum Exterior loads on the Interior beams.

CALDERWOOD ENGINEERING
222 RIVER ROAD
RICHMOND, ME 04357
PH. (207) 737-2007 FAX (207) 737-2008

Prestress Losses:

Min Concrete Cover per VTrans Structures Design Manual 5.1.2.6,
strands located 2.5" from bottom

Total number of prestressing strands $N_{ps} = 22$ $d_b = 0.6\ in$

Number of Strands in 1st Row $N_{strands1} := 18$

Location of strands $x_1 := 2.5\ in$

Clear Cover (to stirrups) $clr := x_1 - 0.5\ in - \frac{0.6\ in}{2} = 1.7\ in$

Number of Strands in 2nd Row $N_{strands2} := N_{ps} - N_{strands1} - 4 = 0$

$x_2 := x_1 + 2\ in = 4.5\ in$

Top Strands $N_{strands3} := N_{ps} - N_{strands1} - N_{strands2} = 4$

$x_3 := x_2 + 2 \cdot 5\ in = 14.5\ in$

$$y_{bs} := \frac{\left(N_{strands1} \cdot x_1 + N_{strands2} \cdot x_2 + N_{strands3} \cdot x_3\right)}{N_{ps}} = 4.682\ in$$

$e := y_b - y_{bs} = 4.318\ in$

$A_{ps} = 4.774\ in^2$ $A_g = 855\ in^2$ $I_x = 23085\ in^4$

$E_p := 28500\ ksi$ $M_g = 215.531\ kip \cdot ft$ $E_{ci} = 3834.254\ ksi$

Table 5.9.3.1: Stress limit for Low-Relax Strands immediately prior to transfer (fpbt) $f_{pbt} := 0.75 \cdot f_{pu} = 202.5\ ksi$

Sum of losses due to elastic shortening/extension at the time of prestress and/or external loads (ksi)

$$\Delta f_{pES} := \frac{\left(A_{ps} \cdot f_{pbt} \cdot \left(I_x + e^2 \cdot A_g\right) - e \cdot M_g \cdot A_g\right)}{\left(A_{ps} \cdot \left(I_x + e^2 \cdot A_g\right) + \frac{\left(A_g \cdot I_x \cdot E_{ci}\right)}{E_p}\right)} = 9.917\ ksi$$

(Equation Per AASHTO LRFD C5.9.5.3a-1)

prestress immediately prior to transfer $f_{pi} := 202.5\ ksi$

avg. annual ambient relative humidity (%) $H := 80$

(AASHTO LRFD Eq. 5.9.5.3-2) $\gamma_h := 1.7 - 0.01\ H = 0.9$

(5.9.5.3-3) $\gamma_{st} := \frac{5}{\left(1 + \frac{f'_{ci}}{ksi}\right)} = 1$

Estimate of relaxation loss, for low relax. strand $\Delta_{fpR} := 2.4\ ksi$

long term losses, shrinkage and creep: (AASHTO LRFD Eq. 5.9.5.3-1)

$$\Delta f_{pLT} := 10 \cdot \frac{\left(f_{pi} \cdot A_{ps}\right)}{A_g} \cdot \gamma_h \cdot \gamma_{st} + 12\ ksi \cdot \gamma_h \cdot \gamma_{st} + \Delta_{fpR} = 23.376\ ksi$$

Total Losses in Pretension members per Eq. 5.9.5.1-1) $\Delta f_{pT} := \Delta f_{pES} + \Delta f_{pLT} = 33.293\ ksi$

Stress in prestressing strands at service limit state after losses, $f_{pe} := f_{pi} - \Delta f_{pT} = 169.207\ ksi$

Check Service I (AASHTO LRFD 5.9.4.2): compression stresses, all limits in table 5.9.4.2.1-1 shall apply

Case 1: stress limit 0.45f'c (ksi) - Compute top fiber stresses -under permanent load
Ppe from:

$Srv1Limit := 0.45 \cdot f'_c = 2.7\ ksi$ $e = 4.318\ in$ $S_t = 2565.00\ in^3$ $S_b = 2565\ in^3$

$A_{ps} = 4.774\ in^2$

$P_{pe} := f_{pe} \cdot A_{ps} = 807.79\ kip$

Moment due to barrier for Service I $M_{railS1} = 261.36\ kip \cdot in$

Moment due to self-weight for Service I $M_{gS1} = 2586.36\ kip \cdot in$

Moment due to wear surface for Service I $M_{wsS1} = 431.04\ kip \cdot in$

$$f_{tg} := \frac{P_{pe}}{A_g} - \frac{P_{pe} \cdot e}{S_t} + \frac{(M_{gS1} + M_{railS1} + M_{wsS1})}{S_t}$$ $f_{tg} = 0.863\ ksi$ ft<2.7 ksi, OK

$$f_{bg} := \frac{P_{pe}}{A_g} + \frac{P_{pe} \cdot e}{S_b} - \frac{(M_{gS1} + M_{railS1} + M_{wsS1})}{S_b}$$ $f_{bg} = 1.026\ ksi$ fb<2.7 ksi, OK

Case 3: stress limit 0.60f'c (ksi) - Compute top fiber stresses -under prestress, permanent load, and transient loads

$$f_t := \frac{P_{pe}}{A_g} - \frac{P_{pe} \cdot e}{S_t} + \frac{(M_{gS1} + M_{railS1} + M_{wsS1} + M_{LLIMS1})}{S_t}$$ $f_t = 2.191\ ksi$ ft< 3.6ksi, OK

Check Service III (AASHTO LRFD 5.9.4.2.2): tension stresses, all limits in table 5.9.4.2.2-1 shall apply

Case 2: Severe corrosion, tensile stress limit (ksi) - Compute top fiber stresses -under permanent load

$Srv3Limit := -\left(0.0948 \cdot \sqrt{f'_c \cdot ksi}\right)$ $Srv3Limit = -0.232\ ksi$ (-) indiates tension

$$f_b := \frac{P_{pe}}{A_g} + \frac{P_{pe} \cdot e}{S_b} - \frac{M_{TS3}}{S_b}$$ $f_b = -0.036\ ksi$ OK for Service III

Check Strength I (AASHTO LRFD 5.7.3):

Mild Reinforcement for Strength 1 $N_s := 0$ $A_{s1} := 0.2\ in^2$ $A_s := N_s \cdot A_{s1} = 0\ in^2$ $d_s := h - 4.25\ in$

$f'_y := 60\ ksi$ $N'_s := 0$ $A'_{s1} := 0.2\ in^2$ $A'_s := A'_{s1} \cdot N'_s = 0\ in^2$

$D_s := 0.5\ in$ $d'_s := 2.5\ in + \frac{0.625}{2}\ in = 2.813\ in$

$A_{psStr1} := (N_{strands1} + N_{strands2}) \cdot A_{strand} = 3.906\ in^2$ (Conservatively Ignore Top Corner Strands)

$y_{bsStr1} := x_1 = 2.5\ in$

Grade 60 #5 bar: per 5.7.2.1.1 $f_{ys} := 60\ ksi$ $d_{ps} := h - y_{bsStr1} = 15.5\ in$

k for low relaxation strands (Table C5.7.3.1.1-1) $k := 0.28$ $f'_c = 6\ ksi$

beta1 not less than 0.65: $\beta_1 := 0.85 - 0.05 \cdot \left(\frac{f'_c}{ksi} - 4\right)$ $\beta_1 = 0.75$

for rectangular section behavior, (5.7.3.1.1-4)

$$c := \frac{A_{psStr1} \cdot f_{pu} + A_s \cdot f_{ys} - A'_s \cdot f_{ys}}{0.85 \cdot f'_c \cdot \beta_1 \cdot b + k \cdot A_{psStr1} \cdot \frac{f_{pu}}{d_{ps}}}$$ $c = 5.254\ in$

$a := \beta_1 \cdot c = 3.94\ in$

f's =f'y if c<3*d's and fy< or = 60ksi $c = 5.254\ in$ $d'_s = 2.813\ in$ $f_s := f_{ys}$

$$f'_s := \begin{cases} f'_y & \text{if } c < 3 \cdot d'_s \\ f'_y & \text{also if } f_{ys} < 60\ ksi \\ \text{"f's"} & \text{else} \end{cases} = 60\ ksi$$

for rectangular section subject to flexure about one axis, where approx. stress distribution in Art. 5.7.2.2 & where fpe> or = 0.5fpu, any P.S. stress (fps) may be taken as $f_{ps} := f_{pu} \cdot \left(1 - k \cdot \frac{c}{d_{ps}}\right)$ $f_{ps} = 244.38\ ksi$

$$M_n := A_{psStr1} \cdot f_{ps} \cdot \left(d_{ps} - \frac{a}{2}\right) + A_s \cdot f_s \cdot \left(d_s - \frac{a}{2}\right) - A'_s \cdot f'_s \cdot \left(d'_s - \frac{a}{2}\right)$$

AASHTO LRFD Equation 5.7.3.2.2-1 $M_n = 12914.672\ kip \cdot in$

phi = 1 for tension controlled prestressed sections $\phi M_n := M_n = 12914.672\ kip \cdot in$ > $M_{uSTR1} = 10168.08\ kip \cdot in$

CALDERWOOD ENGINEERING
222 RIVER ROAD
RICHMOND, ME 04357
PH. (207) 737-2007 FAX (207) 737-2008

Check Minimum Reinforcing: Per AASHTO LRFD 5.7.3.2.2, the amount of prestressed & nonprestressed tensile reinforcement shall be adequate to develop a factored flexural resistance, Mr is the min. of 1.33* factored moment required by applicable load combinations OR Mcr

$M_r := \phi M_n$ **phiMn is greater than Mu, therefore meets strength 1 requirements**

(5.7.3.3.2-1) $\gamma_3 := 1$ for prestressed concrete structures

$\gamma_1 := 1.6$ flex. cracking variability factor, 1.6 for other than segmental

$\gamma_2 := 1.1$ bonded tendons

$f_r := 0.24 \cdot \sqrt{f'_c \cdot ksi} = 0.588\ ksi$ modulus of rupture (Art. 5.4.2.6) for cracking moment

$$f_{cpe} := \frac{P_{pe}}{A_g} + \frac{P_{pe} \cdot e}{S_b} = 2.305\ ksi$$

$M_{cr} := \gamma_3 \cdot \langle \gamma_1 \cdot f_r + \gamma_2 \cdot f_{cpe} \rangle\ S_b = 8915.398\ (kip \cdot in)$

$FactoredMu := 1.33 \cdot M_{uSTR1} = 13523.546\ kip \cdot in$ **> Mcr, therefore Mcr controls**

$CheckminAs := min\langle M_{cr}, FactoredMu \rangle = 8915.398\ kip \cdot in$

$M_r = 12914.672\ kip \cdot in$ **Mr>Mcr, OK**

CALDERWOOD ENGINEERING
222 RIVER ROAD
RICHMOND, ME 04357
PH. (207) 737-2007 FAX (207) 737-2008

Stresses at Transfer, Debonding of Strands $N_{ps} = 22$

4 Strands debonded for 7ft $N_{psdebond} := 4$ $\frac{N_{psdebond}}{N_{ps}} = 0.182$ <0.25 OK

Development length: fpe, fps @ Ld $f_{ps} = 244.376\ ksi$ $f_{pe} = 169.207\ ksi$

$K := 1.0$ $d_b = 0.6\ in$

$A_{psdebond} := (N_{ps} - N_{psdebond}) \cdot A_{strand} = 3.906\ in^2$

$N_{strands1debond} := N_{strands1} - N_{psdebond} = 14$ $x_1 := 2.5\ in$

$N_{strands2debond} := N_{strands2} = 0$ $x_2 := 0\ in$

$N_{strands3debond} := N_{ps} - N_{strands1debond} - N_{psdebond} = 4$ $x_3 = 14.5\ in$

$$y_{bsdebond} := \frac{(N_{strands1debond} \cdot x_1 + N_{strands2debond} \cdot x_2 + N_{strands3debond} \cdot x_3)}{(N_{strands1debond} + N_{strands2debond} + N_{strands3debond})} = 5.167\ in$$

$e_{debond} := y_b - y_{bsdebond} = 3.833\ in$

Elastic losses (defined above) $\Delta f_{pES} = 9.917\ ksi$

Transfer length $l_{trans} := 60 \cdot d_b = 36\ in$

Total beam length $L_{total} = 46.5\ ft$ $x := l_{trans}$

Moment @ transfer length (x) due to self-weight $M_{gtrans} := \frac{w_g \cdot x}{2} \cdot (L_{total} - x)$ $M_{gtrans} = 697.359\ kip \cdot in$

Stress at Transfer: $P_{trans} := (202.5\ ksi - \Delta f_{pES}) \cdot A_{psdebond}$ $P_{trans} = 752.23\ kip$

$$f_{ttrans} := \frac{P_{trans}}{A_g} - \frac{P_{trans} \cdot e_{debond} \cdot y_t}{I_x} + \frac{M_{gtrans} \cdot y_t}{I_x}$$ $f_{ttrans} = 0.027\ ksi$ (-) indicates tension

$$f_{btrans} := \frac{P_{trans}}{A_g} + \frac{P_{trans} \cdot e_{debond} \cdot y_b}{I_x} - \frac{M_{gtrans} \cdot y_b}{I_x}$$ $f_{btrans} = 1.732\ ksi$ compression

$f'_{ci} = 4000$ psi

Stress Limits: 5.9.4

For temporary stresses before losses (5.9.4.1)

$f_{Callow} := 0.60 \cdot f'_{ci}$ $\quad f_{Callow} = 2.4$ ksi

Compression (5.9.4.1.1): for pretensioned and post-tensioned concrete components, inlcuding segmentally constructed bridges

$$\text{Compression@Transfer} := \begin{cases} \text{"OK"} & \text{if } f_{btrans} \le f_{Callow} \\ \text{"NG"} & \text{else} \end{cases} = \text{"OK"}$$

Tension (5.9.4.1.2) All limits in table 5.9.4.1.2-1 shall apply

For other than segmentally constructed bridges, in areas other than precompressed zone without bonded reinforcement

$f_{Tallow} := -0.0948 \cdot \sqrt{f'_{ci} \cdot \text{ksi}} = -0.19$ ksi

$$\text{Tension@Transfer} := \begin{cases} \text{"OK"} & \text{if } f_{ttrans} \ge f_{Tallow} \\ \text{"NG, check with bonded"} & \text{else} \end{cases}$$

$\text{Tension@Transfer} = \text{"OK"}$

$f_{Tallowbond} := -0.24 \cdot \sqrt{f'_{ci} \cdot \text{ksi}} = -0.48$ ksi

$$\text{Tension@TransferBonded} := \begin{cases} \text{"OK"} & \text{if } f_{ttrans} \ge f_{Tallowbond} \\ \text{"NG"} & \text{else} \end{cases} = \text{"OK"}$$

CALDERWOOD ENGINEERING
222 RIVER ROAD
RICHMOND, ME 04357
PH. (207) 737-2007 FAX (207) 737-2008

Check Stress @ Transfer @ Debond + Trans Length

$l_{debond} := l_{trans} + 7\ ft = 10\ ft$ $\quad L_{total} = 46.5\ ft$ $\quad e = 4.318\ in$

Moment @ transfer length (x) due to self-weight $\quad M_{gdebond} := \frac{w_g \cdot l_{debond}}{2} \cdot (L_{total} - l_{debond})$ $\quad M_{gdebond} = 1950.469\ kip \cdot in$

Stress at Transfer: $\quad P_{trans} := (202.5\ ksi - \Delta f_{pES}) \cdot A_{ps}$ $\quad P_{trans} = 919.393\ kip$

$A_{ps} = 4.774\ in^2$

$$f_{tdebond} := \frac{P_{trans}}{A_g} - \frac{P_{trans} \cdot e}{S_t} + \frac{M_{gdebond}}{S_t} \qquad f_{tdebond} = 0.288\ ksi \quad \text{compression}$$

$$f_{bdebond} := \frac{P_{trans}}{A_g} + \frac{P_{trans} \cdot e}{S_b} - \frac{M_{gdebond}}{S_b} \qquad f_{bdebond} = 1.863\ ksi \quad \text{compression}$$

Stress Limits: 5.9.4

```
Compression@Transfer := if f_bdebond ≤ f_Callow | = "OK"
                        ‖ "OK"
                        else
                        ‖ "NG"

Tension@Transfer := if f_tdebond ≥ f_Tallow | = "OK"
                    ‖ "OK"
                    else
                    ‖ "NG, check with bonded"
```

Check at Midspan

$M_{gbeam} := M_g = 215.531\ kip \cdot ft$ $\quad$ at midspan, full beam length

$$f_{tmid} := \frac{P_{trans}}{A_g} - \frac{P_{trans} \cdot e}{S_t} + \frac{M_{gbeam}}{S_t} \qquad f_{tmid} = 0.536\ ksi \quad \text{compression, <2.4 ksi } \textbf{OK}$$

$$f_{bmid} := \frac{P_{trans}}{A_g} + \frac{P_{trans} \cdot e}{S_b} - \frac{M_{gbeam}}{S_b} \qquad f_{bmid} = 1.615\ ksi \quad \text{compression, <2.4 ksi } \textbf{OK}$$

```
Compression@TransferMid := if f_bmid ≤ f_Callow | = "OK"
                           ‖ "OK"
                           else
                           ‖ "NG"

Tension@TransferMid := if f_tmid ≥ f_Tallow | = "OK"
                       ‖ "OK"
                       else
                       ‖ "NG"
```

Shear Design

Check critical section (near supports) dv (5.8.3.2) $V_{uext} = 117.88$ kip

Subscript "1" Denotes property @ section of critial shear @ dv from CL Bearing

$f_{ys} = 60$ ksi $y_{bs1} := y_{bsdebond} = 5.167$ in

$d_{ps1} := h - y_{bs1} = 12.833$ in

$k = 0.28$ $\beta_1 = 0.75$

$f'_c = 6$ ksi $A_{ps1} := A_{psdebond} = 3.906$ in^2

for rectangular section behavior, (5.7.3.1.1-4)

$b = 47.5$ in

$$c_1 := \frac{A_{ps1} \cdot f_{pu} + A_s \cdot f_{ys} - A'_s \cdot f_{ys}}{0.85 \cdot f'_c \cdot \beta_1 \cdot b + k \cdot A_{ps1} \cdot \frac{f_{pu}}{d_{ps1}}} = 5.152 \text{ in}$$

$a_1 := \beta_1 \cdot c_1 = 3.864$ in $b_{v1} := b - 2 \cdot t_{shearkey} = 46$ in (Solid Section)

$$f_{ps1} := f_{pu} \cdot \left(1 - k \cdot \frac{c_1}{d_{ps1}}\right) \qquad f_{ps1} = 239.65 \text{ ksi}$$

$$M_{n1} := A_{ps1} \cdot f_{ps1} \cdot \left(d_{ps1} - \frac{a_1}{2}\right) + A_s \cdot f_s \cdot \left(d_s - \frac{a}{2}\right) - A'_s \cdot f'_s \cdot \left(d'_s - \frac{a}{2}\right) = 850.366 \text{ ft} \cdot \text{kip}$$

$$M_{n1} = 10204.388 \text{ kip} \cdot \text{in}$$

Equation 5.8.2.9-2

$$d_{e1} := \frac{A_{ps1} \cdot f_{ps1} \cdot d_{ps1} + A_s \cdot f_{ys} \cdot d_s}{A_{ps1} \cdot f_{ps1} + A_s \cdot f_{ys}} = 12.833 \text{ in}$$

C5.8.2.9-1

$$d_v := \frac{M_{n1}}{(A_s \cdot f_{ys} + A_{ps1} \cdot f_{ps1})} \qquad d_v = 10.901 \text{ in}$$

$$d_{v1} := \max(d_v, 0.9 \cdot d_{e1}, 0.72 \cdot h) \qquad d_{v1} = 12.96 \text{ in}$$

Since bearing area not yet determined, conservatively assume to be zero for determining critical section for shear. Location of critical shear is dv.

$V_{uext} = 117.88$ kip

CALDERWOOD ENGINEERING
222 RIVER ROAD
RICHMOND, ME 04357
PH. (207) 737-2007 FAX (207) 737-2008

Calculate Shear @ 12.96 in from Centerline of bearing for an Exterior beam

$X := 12.96\ in$ $\quad w_{lane} := 0.64\ \frac{kip}{ft}$ $\quad w_g = 0.891\ \frac{kip}{ft}$ $\quad w_{ws} = 0.148\ \frac{kip}{ft}$

$V_{truck@12.96} := 56.7\ kip$ $\quad V_{lane@12.96} := w_{lane} \cdot \left(\frac{L_{bear}}{2} - X\right) = 13.389\ kip$

Beam Self Wt $\quad V_{g@12.96} := w_g \cdot \left(\frac{L_{bear}}{2} - X\right) = 18.632\ kip$

Wear Surface $\quad V_{ws@12.96} := w_{ws} \cdot \left(\frac{L_{bear}}{2} - X\right) = 3.105\ kip$

Rail Exterior Beam $\quad V_{bext@12.96} := w_{bext} \cdot \left(\frac{L_{bear}}{2} - X\right) = 2.824\ kip$

$$V_{u@12.96in} := 1.25 \cdot \left(V_{bext@12.96} + V_{g@12.96}\right) + 1.5 \cdot V_{ws@12.96} + 1.75 \cdot g_{vext} \cdot \left(1.33 \cdot V_{truck@12.96} + V_{lane@12.96}\right)$$

$V_{u@12.96in} = 116.782\ kip$ $\quad < \quad$ $V_{uext} = 117.88\ kip$

Therefore, use $\quad V_{u1} := V_{uext} = 117.88\ kip$

per 5.5.4.2 $\quad \phi := 0.9$

$V_p := 0$ when using simplified method, per(5.8.2.4) $\quad v_{u1} := \frac{V_{u1}}{\phi \cdot b_{v1} \cdot d_{v1}} = 0.22\ ksi$

CALDERWOOD ENGINEERING
222 RIVER ROAD
RICHMOND, ME 04357
PH. (207) 737-2007 FAX (207) 737-2008

5.8.3.4.2 General Procedure

Parameters beta and theta Table B5.2.1, values of theta and beta for sections with transverse reinforcement

Appendix B5 - General Procedue for Shear Design with Tables

Table B5.2-1—Values of θ and β for Sections with Transverse Reinforcement

$\frac{v_u}{f'_c}$	$\varepsilon_x \times 1{,}000$								
	≤−0.20	≤−0.10	≤−0.05	≤0	≤0.125	≤0.25	≤0.50	≤0.75	≤1.00
≤0.075	22.3 6.32	20.4 4.75	21.0 4.10	21.8 3.75	24.3 3.24	26.6 2.94	30.5 2.59	33.7 2.38	36.4 2.23
≤0.100	18.1 3.79	20.4 3.38	21.4 3.24	22.5 3.14	24.9 2.91	27.1 2.75	30.8 2.50	34.0 2.32	36.7 2.18
≤0.125	19.9 3.18	21.9 2.99	22.8 2.94	23.7 2.87	25.9 2.74	27.9 2.62	31.4 2.42	34.4 2.26	37.0 2.13
≤0.150	21.6 2.88	23.3 2.79	24.2 2.78	25.0 2.72	26.9 2.60	28.8 2.52	32.1 2.36	34.9 2.21	37.3 2.08
≤0.175	23.2 2.73	24.7 2.66	25.5 2.65	26.2 2.60	28.0 2.52	29.7 2.44	32.7 2.28	35.2 2.14	36.8 1.96
≤0.200	24.7 2.63	26.1 2.59	26.7 2.52	27.4 2.51	29.0 2.43	30.6 2.37	32.8 2.14	34.5 1.94	36.1 1.79
≤0.225	26.1 2.53	27.3 2.45	27.9 2.42	28.5 2.40	30.0 2.34	30.8 2.14	32.3 1.86	34.0 1.73	35.7 1.64
≤0.250	27.5 2.39	28.6 2.39	29.1 2.33	29.7 2.33	30.6 2.12	31.3 1.93	32.8 1.70	34.3 1.58	35.8 1.50

$$\frac{V_{u1}}{f'_c} = 0.037$$

Update theta after calculating strain, recalculate strain, check table B5.2.1

$\theta_1 := 21.8\ \text{deg}$ $\quad N_u := 0\ \text{kip}$ $\quad E_s := 29000\ \text{ksi}$

per B5.2-3 definition of fpo $\quad f_{po} := 0.7 \cdot f_{pu}$ $\quad f_{po} = 189\ \text{ksi}$

Within the transfer lengh, fpo varies linearly from zero at the location where the bond between the strands and concrete reaches its full value at the end of the transfer length. Calculate fpo at dv from the Centerline of bearing

$$f_{po1} := f_{po} \cdot \frac{d_{v1}}{l_{trans}} = 68.04\ \text{ksi}$$

Section contains at least the minimum transverse reinforcement as specified in Art. 5.8.2.5 (B5.2-1)

$$V_{uext} \cdot d_v = 107.087\ \text{kip} \cdot \text{ft}$$

$$M_{u1} := (V_{u1} - V_p) \cdot d_{v1} = 127.31\ \text{kip} \cdot \text{ft}$$

Mu shall not be taken as less than Vu*dv.

$$\varepsilon_{xB521} := \frac{\left(\left(\frac{|M_{u1}|}{d_{v1}}\right) + 0.5 \cdot N_u + 0.5 \cdot |V_{u1} - V_p| \cot(\theta_1) - A_{ps1} \cdot f_{po1}\right)}{2 \cdot (E_s \cdot A_s + E_{ps} \cdot A_{ps1})} = 0$$

$$\varepsilon_{xB521} \cdot 1000 = -0.002$$

CALDERWOOD ENGINEERING
222 RIVER ROAD
RICHMOND, ME 04357
PH. (207) 737-2007 FAX (207) 737-2008

If values from B5.2-1 is negative, the strain shall be taken as,

$$\varepsilon_{xB522B} := \frac{\left(\left(\frac{|M_{u1}|}{d_{v1}}\right) + 0.5 \cdot N_u + 0.5 \cdot |V_{u1} - V_p| \cot(\theta_1) - A_{ps1} \cdot f_{po1}\right)}{2 \cdot \left(E_c \cdot \frac{A_g}{2} + E_s \cdot A_s + E_{ps} \cdot A_{ps1}\right)} = 0.000000$$

$$\varepsilon_{xB522B} \cdot 1000 = -0.0001$$

$$\varepsilon_{xLimit} := -0.2 \cdot 10^{-3} = -0.0002$$

$$\varepsilon_{x1} := \max\left(\begin{array}{l} \text{if } 0 \le \varepsilon_{xB521} \le 0.001 \\ \quad \varepsilon_{xB521} \\ \text{else} \\ \quad \varepsilon_{xB522B} \end{array}, \varepsilon_{xLimit}\right) = 0.000000$$

$f'_c = 6$ ksi

$\varepsilon_{x1} \cdot 1000 = -0.0001$

per Table B5.2-1

$\frac{v_{u1}}{f'_c} = 0.037$ $\theta_{uv} := \theta_1 = 21.8$ deg $\beta_{uv1} := 3.75$

concrete shear contribution Vc

(5.8.3.3-3) $V_{c1} := 0.0316 \cdot \beta_{uv1} \cdot \sqrt{f'_c \cdot \text{ksi}} \cdot b_{v1} \cdot d_{v1}$ $V_{c1} = 173.044$ kip

Required Transverse reinforcement at supports per 5.8.2.4, if Vu > .5phi*Vc, then additional reinforcement is needed

(5.8.2.4-1) $\phi_v := 0.9$ $V_{u1} = 117.88$ kip > $0.5 \cdot \phi \cdot (V_{c1} + V_p) = 77.87$ kip

Transverse Reinforcement required.

$V_{sreq'd} := \frac{V_{u1}}{\phi_v} - V_{c1} = -42.066$ kip $F_y := 60$ ksi $S_{reinf.} := 6$ in

$A_{vreq'd} := \frac{(V_{sreq'd} \cdot S_{reinf.})}{F_y \cdot d_{v1} \cdot \cot(\theta_1)} = -0.13$ in^2

Negative Area of Steel indicates that the minimum area of steel required.

CALDERWOOD ENGINEERING
222 RIVER ROAD
RICHMOND, ME 04357
PH. (207) 737-2007 FAX (207) 737-2008

Try, 1 #4 stirrups @ 6" spacing

$A_{\#4} := 0.2\ in^2$ $\alpha := 90$

$A_{v1} := A_{\#4} \cdot 2 = 0.4\ in^2$ meets min area (Avmin)

$$V_{s1} := \frac{A_{v1} \cdot F_y \cdot d_{v1} \cdot \cot(\theta_1) \cdot \sin(\alpha)}{S_{reinf.}} \qquad V_{s1} = 115.87\ kip$$

$V_n := V_{c1} + V_{s1} + V_p = 288.914\ kip$

$V_{r1} := \phi \cdot V_n = 260.023\ kip$

$$\frac{V_u}{\phi} \le V_n$$

$$CheckShear := \begin{cases} \text{if } V_{r1} > V_{u1} \\ \quad \text{"OK"} \\ \text{else} \\ \quad \text{"NG"} \end{cases}$$

$CheckShear = \text{"OK"}$

use, (1) #4 stirrups @ 6" spacing

Max transverse spacing

$f'_c = 6\ ksi$ $v_{u1} = 0.22\ ksi$ $b_{v1} = 46\ in$ $0.125\ f'_c = 0.75\ ksi$

$d_{v1} = 12.96\ in$

$$s_{max} := \begin{cases} \text{if } v_{u1} < (0.125 \cdot f'_c) \\ \quad 0.8 \cdot d_{v1} \\ \text{else if } v_{u1} \ge 0.125 \cdot f'_c \\ \quad 0.4 \cdot d_{v1} \end{cases} = 10.37\ in$$

0.8dv < or = 24 in

0.4dv < or = 12 in

$6\ in < 10.37\ in$ **OK**

Min transverse reinforcement

$$A_{vmin} := 0.0316 \cdot \sqrt{f'_c \cdot ksi} \cdot \frac{b_{v1} \cdot S_{reinf.}}{F_y} = 0.356\ in^2$$

$A_{v1} = 0.4\ in^2$ Av>Avmin, **OK**

CALDERWOOD ENGINEERING
222 RIVER ROAD
RICHMOND, ME 04357
PH. (207) 737-2007 FAX (207) 737-2008

Try changing spacing to 12" @ 12' past the centerline of bearing

Subscript "2" Denotes property @ this location $X_2 := 12\ ft$

Conservatively Ignore the (4) debonded strands since they are only partially developed at this location. Therefore, use same prestressing properties as CL bearing.

$A_{ps2} := A_{ps1} = 3.906\ in^2$ $d_{ps2} := d_{ps1} = 12.833\ in$

$f_{ps2} := f_{ps1} = 239.649\ ksi$ $M_{n2} := M_{n1} = 850.366\ kip \cdot ft$

$d_{v2} := d_{v1} = 12.96\ in$

$b_{v2} := b - 2 \cdot t_{shearkey} = 46\ in$

Calculate Shear @ 12ft from Centerline of bearing for an Exterior beam

@12 ft $V_{truck2} := 38.7\ kip$ $V_{lane2} := w_{lane} \cdot \left(\frac{L_{bear}}{2} - X_2\right) = 6.4\ kip$

Beam Self Wt $V_{g2} := w_g \cdot \left(\frac{L_{bear}}{2} - X_2\right) = 8.906\ kip$

Wear Surface $V_{ws2} := w_{ws} \cdot \left(\frac{L_{bear}}{2} - X_2\right) = 1.484\ kip$

Rail Exterior Beam $V_{bext2} := w_{bext} \cdot \left(\frac{L_{bear}}{2} - X_2\right) = 1.35\ kip$

$V_{u2} := 1.25 \cdot \langle V_{bext2} + V_{g2} \rangle + 1.5 \cdot V_{ws2} + 1.75 \cdot g_{vext} \cdot \langle 1.33 \cdot V_{truck2} + V_{lane2} \rangle$

$V_{u2} = 70.639\ kip$

CALDERWOOD ENGINEERING
222 RIVER ROAD
RICHMOND, ME 04357
PH. (207) 737-2007 FAX (207) 737-2008

Calculate Moment @ 12ft from Centerline of bearing for an Exterior beam

$M_{truck2} := 445.1\ kip \cdot ft$

$M_{lane2} := \frac{\langle w_{lane} \cdot X_2 \rangle}{2} \cdot \langle L_{bear} - X_2 \rangle = 122.88\ ft \cdot kip$

Beam Self Wt

$M_{g2} := \frac{\langle w_g \cdot X_2 \rangle}{2} \cdot \langle L_{bear} - X_2 \rangle = 171\ ft \cdot kip$

Wear Surface

$M_{ws2} := \frac{\langle w_{ws} \cdot X_2 \rangle}{2} \cdot \langle L_{bear} - X_2 \rangle = 28.5\ ft \cdot kip$

Rail Exterior Beam

$M_{bext2} := \frac{\langle w_{bext} \cdot X_2 \rangle}{2} \cdot \langle L_{bear} - X_2 \rangle = 25.92\ ft \cdot kip$

$$M_{u2} := 1.25 \cdot \langle M_{bext2} + M_{g2} \rangle + 1.5 \cdot M_{ws2} + 1.75 \cdot g_{vext} \cdot \langle 1.33 \cdot M_{truck2} + M_{lane2} \rangle$$

$M_{u2} = 975.617\ ft \cdot kip$

$v_{u2} := \frac{V_{u2}}{\phi \cdot b_{v2} \cdot d_{v2}} = 0.132\ ksi$

$\frac{v_{u2}}{f'_c} = 0.022$

5.8.3.4.2 General Procedure

Parameters beta and theta Table B5.2.1, values of theta and beta for sections with transverse reinforcement

Appendix B5 - General Procedure for Shear Design with Tables

Update theta after calculating strain, recalculate strain, check table B5.2.1

$\theta_2 := 21.0$ $\quad N_u = 0\ kip \quad E_s = 29000\ ksi$

At 8' from centerline of bearing (16) Undebonded strands are fully bonded, the (4) debonded strands are not fully bonded.

$N_{strands1} := 16 \qquad f_{poa} := f_{po} = 189\ ksi \qquad A_{psa} := N_{strands1} \cdot A_{strand} = 3.472\ in^2$

$N_{strands2} := N_{ps} - N_{strands1} = 6 \qquad f_{pob} := f_{po} \cdot \frac{12\ in}{l_{trans}} = 63\ ksi \qquad A_{psb} := N_{strands2} \cdot A_{strand} = 1.302\ in^2$

Section contains at least the minimum transverse reinforcement as specified in Art. 5.8.2.5 (B5.2-1)

$$\varepsilon_{xB521} := \frac{\left(\frac{|M_{u2}|}{d_{v2}}\right) + 0.5 \cdot N_u + 0.5 \cdot |V_{u2} - V_p| \cot(\theta_2) - (A_{psa} \cdot f_{poa} + A_{psa} \cdot f_{poa})}{2 \cdot (E_s \cdot A_s + E_{ps} \cdot (A_{psa} + A_{psa}))} = -0.0011$$

$$\varepsilon_{xB521} \cdot 1000 = -1.092$$

If values from B5.2-1 is negative, the strain shall be taken as,

$$\varepsilon_{xB522B} := \frac{\left(\left(\frac{|M_{u2}|}{d_{v2}}\right) + 0.5 \cdot N_u + 0.5 \cdot |V_{u2} - V_p| \cot(\theta_2) - (A_{psa} \cdot f_{poa} + A_{psa} \cdot f_{poa})\right)}{2 \cdot \left(E_c \cdot \frac{A_g}{2} + E_s \cdot A_s + E_{ps} \cdot (A_{psa} + A_{psa})\right)} = -0.0001$$

$\varepsilon_{xB522B} \cdot 1000 = -0.098 \qquad \varepsilon_{xLimit} = -0.0002$

$$\varepsilon_{x2} := \max\left(\begin{array}{l} \text{if } 0 \le \varepsilon_{xB521} \le 0.001 \\ \quad \varepsilon_{xB521} \\ \text{else} \\ \quad \varepsilon_{xB522B} \end{array}, \varepsilon_{xLimit}\right) = -0.000098$$

$f'_c = 6\ ksi \qquad \varepsilon_{x2} \cdot 1000 = -0.098$

per Table B5.2-1 $\quad \frac{v_{u2}}{f'_c} = 0.022 \qquad \theta_{uv2} := \theta_2 = 21 \qquad \beta_{uv2} := 4.10$

CALDERWOOD ENGINEERING
222 RIVER ROAD
RICHMOND, ME 04357
PH. (207) 737-2007 FAX (207) 737-2008

Concrete shear contribution Vc

(5.8.3.3-3) $V_{c2} := 0.0316 \cdot \beta_{uv2} \cdot \sqrt{f'_c \cdot ksi} \cdot b_{v2} \cdot d_v$ $V_{c2} = 159.141\ kip$

Required Transverse reinforcement at supports per 5.8.2.4, if Vu > .5phi*Vc, then additional reinforcement is needed

(5.8.2.4-1) $\phi_v := 0.9$ $V_{u2} = 70.639\ kip$ < $0.5 \cdot \phi \cdot (V_{c2} + V_p) = 71.614\ kip$

Transverse Reinforcement not required.
Max spacing does not apply.

$S_{reinf.} := 12\ in$

$V_{sreq'd2} := \frac{V_{u2}}{\phi_v} - V_{c2} = -80.653\ kip$

$F_y := 60\ ksi$

$A_{vreq'd2} := \frac{(V_{sreq'd2} \cdot S_{reinf.})}{F_y \cdot d_{v2} \cdot \cot(\theta_2)} = 1.901\ in^2$

Negative value indicates steel required, no steel required.

(1) #4 stirrup @ 12" spacing starting 12' from CL bearing.

$A_{\#4} := 0.2\ in^2$ $\alpha := 90$

$A_{v2} := A_{\#4} \cdot 2 = 0.4\ in^2$

meets min area (Avmin) 2 vertical legs of stirrups per S =12in

$V_{s2} := \frac{A_{v2} \cdot F_y \cdot d_{v2} \cdot \cot(\theta_2) \cdot \sin(\alpha)}{S_{reinf.}}$ $V_{s2} = -15.17\ kip$

$V_{n2} := V_{c2} + V_{s2} + V_p = 143.971\ kip$

$V_{r2} := \phi \cdot V_{n2} = 129.574\ kip$ $V_{u2} = 70.639\ kip$

$\frac{V_u}{\phi} \le V_n$

```
CheckShear := if V_r2 > V_u2
                  "OK"
              else
                  "NG"
```

CheckShear = "OK"

Ok to change spacing to 12" @ 12' from Centerline of Bearing.

CALDERWOOD ENGINEERING
222 RIVER ROAD
RICHMOND, ME 04357
PH. (207) 737-2007 FAX (207) 737-2008

Check Longitudinal Reinforcement @ Support per 5.8.3.5

5.8.3.5-1 $A_{ps1} = 3.906\ in^2$ $d_{ps1} = 12.833\ in$ $A_s = 0\ ft^2$

$f_{ps1} = 239.649\ ksi$

$Long_{reinf1} := A_{ps1} \cdot f_{ps1} + A_s \cdot f_{ys} = 936.071\ kip$

$\phi_f := 1.0$ $\phi_v := 0.9$ $M_{uvsprt} := 0\ kip \cdot ft$ Use actual Moment @ Support

$d_{v1} = 12.96\ in$ $V_{s1} = 115.87\ kip$ $\theta_1 = 21.8\ deg$ $V_{u1} = 117.88\ kip$

$$Limit_1 := \frac{|M_{uvsprt}|}{d_{v1} \cdot \phi_f} + \left(\left| \frac{V_{u1}}{\phi_v} - V_p \right| - 0.5 \cdot V_{s1} \right) \cdot \cot(\theta_1) = 182.62\ kip$$

$$CheckLong_1 := \begin{cases} \text{"OK"} & \text{if } Long_{reinf1} > Limit_1 \\ \text{"NG"} & \text{else} \end{cases}$$

$CheckLong_1 = \text{"OK"}$

Check Longitudinal Reinforcement @ Midspan

$A_{ps} = 4.774\ in^2$ $\quad d_{ps} = 15.5\ in$ $\quad f_{ps} = 244.376\ ksi$ $\quad b_{vmid} := b_{v1} = 46\ in$

$M_{uSTR1} = 847.34\ kip \cdot ft$ $\quad \phi M_n = 1076.223\ kip \cdot ft$

$$d_e := \frac{A_{ps} \cdot f_{ps} \cdot d_{ps} + A_s \cdot f_{ys} \cdot d_s}{A_{ps} \cdot f_{ps} + A_s \cdot f_{ys}} = 15.5\ in$$ (Same as dps)

$$d_v := \frac{\phi M_n}{\left(A_s \cdot f_{ys} + A_{ps} \cdot f_{ps}\right)}$$ $\quad d_v = 11.07\ in$

$d_{vmid} := \max\left(d_v, 0.9 \cdot d_e, 0.72 \cdot h\right)$ $\quad d_{vmid} = 13.95\ in$

$Long_{reinfmid} := A_{ps} \cdot f_{ps} + A_s \cdot f_{ys} = 1166.649\ kip$

$V_{truckmid} := 21.8\ kip$ Unfactored, Undistributed

$\gamma_{LL} = 1.75$ $\quad I.M. = 1.33$ $\quad g_v = 0.549$

$V_{umid} := V_{truckmid} \cdot \gamma_{LL} \cdot I.M. \cdot g_v = 27.852\ kip$

$d_{vmid} = 13.95\ in$ $\quad v_{umid} := \dfrac{V_{umid}}{\phi \cdot b_{vmid} \cdot d_{vmid}} = 0.048\ ksi$

Section contains at least the minimum transverse reinforcement as specified in Art. 5.8.2.5 (B5.2-1) $\quad$ Try $\quad \theta_{mid} := 22.3\ deg$

$$\varepsilon_{xB521} := \frac{\left(\left(\dfrac{\left|M_{uSTR1}\right|}{d_{vmid}}\right) + 0.5 \cdot N_u + 0.5 \cdot \left|V_{umid} - V_p\right| \cot\left(\theta_{mid}\right) - \left(A_{ps} \cdot f_{po}\right)\right)}{2 \cdot \left(E_s \cdot A_s + E_{ps} \cdot A_{ps}\right)} = -0.0005$$

$\varepsilon_{xB521} \cdot 1000 = -0.512$ $\quad \varepsilon_{Limit} := 3.0 \cdot 10^{-3} = 0.003$

$\varepsilon_{xmid} := min\left(\varepsilon_{xB521}, \varepsilon_{Limit}\right) = -0.000512$ $\quad \varepsilon_{xmid} \cdot 1000 = -0.512$

per Table B5.2-1 $\quad \dfrac{v_{umid}}{f'_c} = 0.008$ $\quad \theta_{uvmid} := \theta_{mid}$ $\quad \beta_{uvmid} := 6.32$

CALDERWOOD ENGINEERING
222 RIVER ROAD
RICHMOND, ME 04357
PH. (207) 737-2007 FAX (207) 737-2008

$A_{vmid} := A_{v1} = 0.4\ in^2$

$$V_{smid} := \frac{A_{vmid} \cdot F_y \cdot d_{vmid} \cdot \cot(\theta_{mid}) \cdot \sin(\alpha)}{S_{reinf.}} = 60.816\ kip$$

$$Limit_{mid} := \frac{|M_{uSTR1}|}{d_{vmid} \cdot \phi_f} + \left(\left| \frac{V_{umid}}{\phi_v} - V_p \right| - 0.5 \cdot V_{smid} \right) \cdot \cot(\theta_{mid}) = 730.209\ kip$$

$$CheckLong_{mid} := \begin{cases} \text{"OK"} & \text{if } Long_{reinfmid} > Limit_{mid} \\ \text{"NG"} & \text{else} \end{cases}$$

$CheckLong_{mid} = \text{"OK"}$

CALDERWOOD ENGINEERING
222 RIVER ROAD
RICHMOND, ME 04357
PH. (207) 737-2007 FAX (207) 737-2008

Check Pretensioned Anchorage Zone 5.10.10

$A_{ps} = 4.774\ in^2$

$F_p := f_{pi} \cdot A_{ps} = 966.735\ kip$

bursting resistance, Pr, should not be less than 4.0% of Ppi

$P_r := 0.04 \cdot F_p = 38.669\ kip$

$f_{sallow} := 20\ ksi$

Per AASHTO LRFD 5.10.10-1 on splitting resistance in pretensioned anchorage zones, for pretensioned solid slabs, As, shall be taken as the total area of the horizontal reinforcement located within a distance h/4 from the end of the member, where h is the width of the member.

$A_{sburst} := \frac{P_r}{f_{sallow}} = 1.933\ in^2$

$h_{split} := b = 47.5\ in$

$fromend := \frac{h_{split}}{4} = 11.875\ in$

dimension from end of beam in direction that splitting is being evaluated.

Add additional #4 stirrups at ends to meet required burst resistance

$A_{sburst} = 1.933\ in^2$

$fromend = 11.875\ in$

$A_{steelend} := 3 \cdot (2 \cdot 2 \cdot A_{\#4}) = 2.4\ in^2$

End of beam stirrups: (3) sets of two #4 stirrups starting 3" from beam end, spaced @ 3"

required steel: $A_{sburst} = 1.933\ in^2$

actual steel: $A_{steelend} = 2.4\ in^2$

Start first set 3" from beam end, space 3" apart to CL bearing where stirrup spacing changes.

CALDERWOOD ENGINEERING
222 RIVER ROAD
RICHMOND, ME 04357
PH. (207) 737-2007 FAX (207) 737-2008

Check Fatigue

$M_g = 215.531\ kip \cdot ft$

$M_{ws} = 35.922\ kip \cdot ft$

$M_{bext} = 32.67\ kip \cdot ft$

$M_{uFat1} := 385.6\ kip \cdot ft$ (Unfactored, Undistributed)

Fatigue 1

$\gamma_{LLFat1} := 1.5$ $\gamma_{DCFat1} := 1.0$ $\gamma_{DWFat1} := 1.0$ $I.M._{Fat1} := 1.15$ $g_m = 0.335$

$M_d := M_g + M_{ws} + M_{bext} = 284.123\ kip \cdot ft$

$M_{LL} := M_{uFat1} \cdot \gamma_{LLFat1} \cdot I.M._{Fat1} \cdot g_m = 222.56\ kip \cdot ft$

$P_{pe} = 807.795\ kip$ $A_g = 855\ in^2$ $e = 4.318\ in$ $S_t = 2565\ in^3$

$S_b = 2565\ in^3$

$$f_{tFat1} := \frac{1}{2}\left(\frac{P_{pe}}{A_g} - \frac{P_{pe} \cdot e}{S_t} + \frac{M_d}{S_t}\right) + \frac{M_{LL}}{S_t} = 1.498\ ksi$$ (Compression, less than allowable OK)

$F_{callow} := 0.4 \cdot f'_c = 2.4\ ksi$

$$f_{bFat1} := \frac{P_{pe}}{A_g} + \frac{P_{pe} \cdot e}{S_b} - \frac{M_d + M_{LL}}{S_t} = -0.066\ ksi$$ (Tension, less than allowable OK)

$$F_{tallow} := -0.0948 \cdot \sqrt{\frac{f'_c}{ksi}} \cdot ksi = -0.232\ ksi$$ (Tension)

Both Top and Bottom of Beams are under the allowable compressive stress, **OK**

Live Load Deflection

Deflection due to truck: **Number of lanes/Number of beams** $DF := \frac{2}{9} = 0.222$

Check Tandem:

$P_{truck2} := 25\ kip \cdot DF \cdot I.M. = 7.389\ kip$ $b_{truck} := \frac{(L_{bear} - 4\ ft)}{2} = 20\ ft$

$$\Delta_{truck} := \frac{P_{truck2} \cdot b_{truck}}{24 \cdot E_c \cdot I_x} \cdot \left(3 \cdot L_{bear}^{\ 2} - 4 \cdot b_{truck}^{\ 2}\right) = 0.413\ in$$

HL93 truck check:

$P_1 := 32\ kip$
$b_1 := 22\ ft - 9.3\ ft = 12.7\ ft$
$a_1 := 44\ ft - b_1 = 31.3\ ft$

$$\Delta_{max1} := \frac{1.33 \cdot DF \cdot (P_1) \cdot a_1 \cdot b_1 \cdot (a_1 + 2 \cdot b_1) \cdot \sqrt{3 \cdot a_1 \cdot (a_1 + 2 \cdot b_1)}}{27 \cdot E_c \cdot I_x \cdot L_{bear}} = 0.209\ in$$

$P_2 := 32\ kip$
$b_2 := 22\ ft - 4.7\ ft = 17.3\ ft$
$a_2 := 44\ ft - b_2 = 26.7\ ft$

$$\Delta_{max2} := \frac{1.33 \cdot DF \cdot (P_2) \cdot a_2 \cdot b_2 \cdot (a_2 + 2 \cdot b_2) \cdot \sqrt{3 \cdot a_2 \cdot (a_2 + 2 \cdot b_2)}}{27 \cdot E_c \cdot I_x \cdot L_{bear}} = 0.252\ in$$

$P_3 := 8\ kip$
$b_3 := 22\ ft - 18.7\ ft = 3.3\ ft$
$a_3 := 44\ ft - b_3 = 40.7\ ft$

$$\Delta_{max3} := \frac{1.33 \cdot DF \cdot (P_3) \cdot a_3 \cdot b_3 \cdot (a_3 + 2 \cdot b_3) \cdot \sqrt{3 \cdot a_3 \cdot (a_3 + 2 \cdot b_3)}}{27 \cdot E_c \cdot I_x \cdot L_{bear}} = 0.015\ in$$

$$\Delta_{truckHL} := \Delta_{max1} + \Delta_{max2} + \Delta_{max3} = 0.476\ in$$

HL93 truck controls over tandem . Calculated max deflections for HL93 are superimposed deflections at location of maximum deflection due to individual axle loads. This approach by inspection is conservative compared to single maximum deflection of all axles at single location.

Deflection due to lane load

$w_{lane} := 0.64\ \frac{kip}{ft} \cdot .25 = 0.013\ \frac{kip}{in}$ $\Delta_{lane} := \frac{5 \cdot w_{lane} \cdot L_{bear}^{\ 4}}{384 \cdot E_c \cdot I_x} = 0.124\ in$

$$\Delta_{livetotal} := \max\left(\Delta_{truckHL}, \left(0.25 \cdot \Delta_{truckHL} + \Delta_{lane}\right)\right) = 0.476\ in$$

$\Delta_{allow} := \frac{L_{bear}}{800} = 0.66\ in$ **allowable > total deflection, OK**

```
CheckDeflections := if Δallow > Δlivetotal
                       "Meets deflection requirements"
                    else
                       "Does not meet deflection requirements"
```

CheckDeflections = "Meets deflection requirements" **OK for live load deflection.**

CALDERWOOD ENGINEERING
222 RIVER ROAD
RICHMOND, ME 04357
PH. (207) 737-2007 FAX (207) 737-2008

Approach Slab Seat Check

check lifting at transfer
end section in flexure

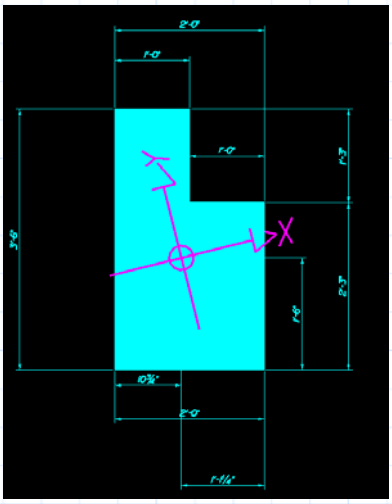

$L_{beam} := 46.5\ ft$

$h := 18\ in$

$b := 3\ ft + 11.5\ in$

$b_{ext} := 3\ ft + 11.5\ in - 2\ ft = 1.958\ ft$

$A_{interface} := h \cdot b = 855\ in^2$

$A_{seat} := 5.75\ ft^2$

$w_g = 0.891\ \frac{kip}{ft}$

Loads: Assume 1 wheel $w_{truck} := \frac{32\ kip}{2} = 16\ kip$

Approach Seat Self Weight: $\gamma_c = 150\ pcf$ $w_{seat} := \gamma_c \cdot A_{seat} \cdot b = 3.414\ kip$

$x_{lifter} := 2\ ft$

$L_{lifters} := L_{beam} - 4\ ft = 42.5\ ft$

$L_{seat} := 2\ ft$

$x_{seatcg} := 10.75\ in$ from end of seat (aprch slab side)

$$R_b := \frac{-w_{seat} \cdot \langle x_{lifter} + x_{seatcg} \rangle - \left(w_g \cdot x_{lifter} \cdot \frac{x_{lifter}}{2}\right) + w_g \cdot \langle L_{lifters} + x_{lifter} \rangle \cdot \left(\frac{L_{lifters} + x_{lifter}}{2}\right) + w_{seat} \cdot \langle L_{lifters} + x_{lifter} + x_{seatcg} \rangle}{L_{lifters}} = 24.121\ kip$$

$R_a := R_b = 24.121\ kip$

Moment at lifter (during lifting due to beam and seat self weight): $M_{Dlifter} := \frac{w_{seat} \cdot 2\ ft}{2} + w_{seat} \cdot 2\ ft + w_g \cdot 2\ ft \cdot 2\ \frac{ft}{2} = 12.023\ kip \cdot ft$

CG of seat from end of beam $x_t := 10.75\ in$

Moment due to self weight and truck with impact (installed): $M_{tenseat} := 1.25 \cdot w_{seat} \cdot x_t + 1.33 \cdot 1.75 \cdot w_{truck} \cdot 2\ ft = 78.303\ kip \cdot ft$

Moment at end of beam/ backwall seat interface when lifting due to backwall self weight, truck with impact controls. $M_{wseat} := w_{seat} \cdot 10.75\ in = 3.058\ kip \cdot ft$

CALDERWOOD ENGINEERING
222 RIVER ROAD
RICHMOND, ME 04357
PH. (207) 737-2007 FAX (207) 737-2008

BEAM LIFTER DESIGN

(4) Triple 1/2" DIAMETER STRAND LIFTING LOOPS PER BEAM
2'-0" FROM END OF BEAM, SPACED 2'
MIN. 16" EMBEDMENT W/ 1'-0" HOOKS

$w_g = 0.891 \frac{kip}{ft}$ $\quad L_{total} = 46.5\ ft$ $\quad w_{seat} = 3.414\ kip$

$w_{beam} := w_g \cdot L_{total} = 41.414\ kip$ $\quad w_{beamlifter} := \frac{w_{beam}}{4} = 10.354\ kip$ $\quad \frac{w_{seat}}{2} = 1.707\ kip$

Load per lifter: $\quad w_{lifter} := w_{beamlifter} + \frac{w_{seat}}{2} = 12.061\ kip$

Sling Load factor for 60 degree from horizontal = 1.16 (Fig. 5.3.2.1) $\quad F_{lift60} := 1.16$

$T_{lifter} := w_{lifter} \cdot F_{lift60} = 13.99\ kip$

$T_{lifter} := \frac{w_{lifter}}{(\sin(60\ deg) \cdot \sin(60\ deg))} = 16.081\ kip$

PCI Design Handbook (5.3.4.2) Strand Lifting Loops, Safe working load for triple strand loops: $\quad F_{triple} := 8\ kip \cdot 2.2 = 17.6\ kip$

> 13.99 Kip per lifter and with a min 60 degree angle in both lifting planes, > 16.081 kip, conservative since angle line in transverse plane will be larger than 60 degrees.

Assuming the allowable capacity of strand loops is directly proporional to the concrete failure cone surface area, allowable capacity reduced for 16" embedment length,

Area cone for 24 in embedment, 45 degree cone $\quad A_{cone24} := \pi \cdot (24\ in) \cdot \sqrt{2 \cdot ((24\ in)^2)} + \pi \cdot (24\ in)^2 = 4368.658\ in^2$

Area cone for 16 in embedment, 45 degree cone $\quad A_{cone16} := \pi \cdot (16\ in) \cdot \sqrt{2 \cdot ((16\ in)^2)} + \pi \cdot (16\ in)^2 = 1941.626\ in^2$

$\phi := \frac{A_{cone16}}{A_{cone24}} = 0.444$

Cap of concrete for each lifter: Per AASHTO concrete shear capacity when only in shear in flexure: $\quad v_c := 0.95 \cdot \sqrt{(4000 \cdot psi) \cdot psi} \cdot A_{cone16} = 116.659\ kip$

Shear capacity of concrete for 16" embedment and 45 degree failure plane. $\quad cap16 := \phi \cdot v_c = 51.849\ kip$

cap16 > wlifter, 16" embedment for triple 1/2" strand lifting loops.
2 sets typ. each end of solid slab, 2ft from end of beam.

CALDERWOOD ENGINEERING
222 RIVER ROAD
RICHMOND, ME 04357
PH. (207) 737-2007 FAX (207) 737-2008

Check tension in top at lifters (2ft from beam end)

@Transfer $f'_{ci} = 4000$ psi $L_{total} = 46.5$ ft $e = 4.318$ in

$x = 36$ in

Moment @ lifter due to self-weight+ approach seat $A_{psdebond} = 0.027\ ft^2$

Stress at Transfer: $P_{transdebond} := (202.5\ ksi - \Delta f_{pES}) \cdot A_{psdebond}$ $P_{transdebond} = 752.23$ kip

$A_{ps} = 4.774\ in^2$ $A_{psdebond} := (N_{ps} - N_{psdebond}) \cdot A_{strand} = 3.906\ in^2$

$$f_{tlifter} := \frac{P_{transdebond}}{A_g} - \frac{P_{transdebond} \cdot e}{S_t} - \frac{M_{Dlifter}}{S_t}$$ $f_{tlifter} = -0.443$ ksi (-) indicates tension,

$$f_{blifter} := \frac{P_{transdebond}}{A_g} + \frac{P_{transdebond} \cdot e}{S_b} + \frac{M_{Dlifter}}{S_b}$$ $f_{blifter} = 2.202$ ksi compression

Stress Limits: 5.9.4

```
Compression@Transfer := if f_blifter ≤ f_Callow | = "OK"
                          || "OK"               |
                        else                    |
                          || "NG"               |
```

```
Tension@Transfer := if f_tlifter ≥ f_Tallow                | = "NG, check with bonded"
                      || "OK"                              |
                    else                                   |
                      || "NG, check with bonded"           |
```

CALDERWOOD ENGINEERING
222 RIVER ROAD
RICHMOND, ME 04357
PH. (207) 737-2007 FAX (207) 737-2008

Determine required area steel for tension at lifters at transfer:

$A_{ps1} = 3.906\ in^2$ $\quad d_{ps1} = 12.833\ in$

$f_{ps1} = 239.649\ ksi$

$f_{Tallowbond} = -0.48\ ksi$

5.8.3.5-1

Must include bonded reinforcement for tension at transfer for lifting beam.

$f_{tlifter} = -0.443\ ksi$ $\quad f_{blifter} = 2.202\ ksi$ $\quad h = 18\ in$

Calculate Total Tension in top of Beam @ Transfer

$x := \frac{\langle h \cdot |f_{tlifter}| \rangle}{|f_{tlifter} + f_{blifter}|} = 4.53\ in$ (Distance to N.A. from top of beam)

$T_{trans} := 0.5 \cdot x \cdot f_{tlifter} \cdot b = -47.642\ kip$

$F_{allow} := 30\ ksi$ Per Table 5.9.4.1.2-1

$A_{sreq'd} := \frac{T_{trans}}{F_{allow}} = -1.588\ in^2$ negative indicates steel required.

$A_{\#5} := 0.31\ in^2$

$A_{smild} := 6 \cdot A_{\#5} = 1.86\ in^2$ > 1.588in^2 OK

Use (6) additional #5 bars, full length of beam for tension in top of beam at lifters (lifters located 2' from beam ends.)

CALDERWOOD ENGINEERING
222 RIVER ROAD
RICHMOND, ME 04357
PH. (207) 737-2007 FAX (207) 737-2008

Check backwall/beam face during lifting (at transfer, 4ksi)

Check mild reinforcing projecting from beam, flexure at beam/ backwall interface.
(Mtenseat calculated above pg 32, assume truck wheel on end of seat)

$b = 3.958\ ft$
$h = 18\ in$

Tension Reinforcement: (6) #5 bars, projecting from end of beam into seat with lap splice

$N_s := 6$ $A_{\#5} = 0.31\ in^2$ $A_{smild} = 1.86\ in^2$ $d_s := h - 3.5\ in$

$f'_y := 60\ ksi$ $f_{ys} := 60\ ksi$

$f'_{cs} := 4\ ksi$

beta1 not less than 0.65: $\beta_1 := 0.85 - 0.05 \cdot \left(\frac{f'_{cs}}{ksi} - 4\right)$ $\beta_1 = 0.85$

for rectangular section behavior, (5.7.3.1.1-4) $c := \frac{A_{smild} \cdot f_{ys}}{0.85 \cdot f'_c \cdot \beta_1 \cdot b}$ $c = 0.542\ in$

$a := \beta_1 \cdot c = 0.461\ in$

$c = 0.542\ in$ $d'_s = 2.813\ in$ $f_s := f_{ys}$

$M_n := A_{smild} \cdot f_s \cdot \left(d_s - \frac{a}{2}\right)$

AASHTO LRFD Equation 5.7.3.2.2-1 $M_n = 132.708\ kip \cdot ft$

$\phi M_n := M_n = 132.708\ kip \cdot ft$ > $M_{tenseat} = 78.303\ kip \cdot ft$

min area steel required to resist moment:

$A_{req} := 0.31\ in^2 \cdot 4 = 1.24\ in^2$

Approach seat section OK, only 4 bars required here but will project all (6) #5 bars into backwall. Project 4 bottom strands also.

CALDERWOOD ENGINEERING
222 RIVER ROAD
RICHMOND, ME 04357
PH. (207) 737-2007 FAX (207) 737-2008

Lap splice development length

AASHTO LRFD 5.11.2.1

$A_{\#5} := 0.31\ in^2 \quad f_{ymild} := 60\ ksi \quad d_{b\#5} := 0.625\ in$

for No. 11 bar and smaller $\quad l_{db} := \max\left(\frac{1.25 \cdot 0.31 \cdot 60}{\sqrt{6}} \cdot in, 0.4 \cdot 0.625\ in \cdot 60\right) = 15\ in$

Development length reduction factors per AASHTO LRFD:

for 6" min spacing and 3" min clr reduce length by 0.8 factor

reduce for additional steel beyond required. $\quad \phi_{As} := \frac{A_{req}}{A_{smild}} = 0.667$

Areq, is steel required to resist moment at interface of beam and backwall due to truck wheel at end of approach seat (pg 37)

Required length of splice: $\quad l_d := l_{db} \cdot 0.8 \cdot \phi_{As} = 8\ in$

Minimum lap splice length for all lap splices in backwall seat is 8"

CALDERWOOD ENGINEERING
222 RIVER ROAD
RICHMOND, ME 04357
PH. (207) 737-2007 FAX (207) 737-2008

Bearing: 3/4" x 6" x 3'-10" 50 Duro elastomeric bearing pad at each end of the beam

Compressive Stress:

Dimensions of bearing pad: $L := 6\ in$ $W := 3\ ft + 10\ in$ $h_{ri} := 0.75\ in$

Total Service Loads: $M_{TS1} = 557.13\ kip \cdot ft$ $V_{TS1} = 73.99\ kip$

Force at each bearing:

Bearing Area: $A_{bear} := 6\ in \cdot (3\ ft + 10\ in) = 1.917\ ft^2$

Compressive stress per bearing: $\sigma_s := \frac{V_{TS1}}{A_{bear}} = 0.268\ ksi$

Shear Modulus: shore A 50 Dur. $G := 0.095$

Shape Factor (S): $S := \frac{L \cdot W}{2 \cdot \langle h_{ri} \rangle \cdot (L + W)} = 3.538$

$1.00 \cdot G \cdot S = 0.336$ controls

$0.8\ ksi$

0.268ksi < 0.336ksi, OK

Compressive Deflection:
(AASHTO LRFD 14.7.6.3.3)

$S = 3.538$ $\sigma_s = 0.268\ ksi$ ==> strain $\varepsilon_T := 0.0375$

$\delta_T := \varepsilon_T \cdot h_{ri} = 0.028\ in$ < $0.09 \cdot h_{ri} = 0.068\ in$

Compressive deflection OK for bearings.

Shear:

coefficient thermal expansion for normal weight concrete: $\alpha := 0.000006$

both ends expanding so we assume 75% of beam length contributes to expansion at one end.

$\Delta_s := \alpha \cdot 45.5\ ft \cdot (70) \cdot 0.75 = 0.172\ in$

$limit := 2 \cdot \Delta_s = 0.344\ in$ < hri, OK in Shear deformation.

Bearing OK per AASHTO LRFD Method A

CALDERWOOD ENGINEERING
222 RIVER ROAD
RICHMOND, ME 04357
PH. (207) 737-2007 FAX (207) 737-2008

LOAD RATING

Project: Andover, VT Bridge
Contractor: JP Carrara & Sons, Inc.

Value Engineering Design: Calderwood Engineering
Design Computations by: Rachael Joyce, EIT
Design Check Computations by: GNM

References:

VTrans Structures Design Manual 5th Edition
AASHTO LRFD Bridge Design Specifications, Seventh Edition, 2014; The Manual for Bridge Evaluation, AASHTO 2011

Sumary of Load Rating

	Section	Live Load	Inventory		Operating	
Interior	Positive Flexure	HL-93	1.65	59.5 T	2.14	77.13 T
	Strength I	3s2			3.75	135.02 T
		6at			1.97	130.2 T
		3as			2.61	78.38 T
		4as			2.38	82.18 T
		5as			3.04	115.44 T
		h20	2.73	54.62 T	3.54	70.8 T
Exterior Girder	Positive Flexure	HL-93	1.43	51.6 T	1.86	66.89 T
	Strength I	3s2			3.25	117.09 T
		6at			1.71	112.91 T
		3as			2.27	67.97 T
		4as			2.07	71.27 T
		5as			2.63	100.11 T
		h20	2.37	47.36 T	3.07	61.4 T
Interior	Positive Flexure	HL-93	1.38	49.7 T		
	Service 3	3s2				
		6at				
		3as				
		4as				
		5as				
		h20	2.28	45.62 T		
Exterior	Positive Flexure	HL-93	1.14	40.91 T		
	Service 3	3s2				
		6at				
		3as				
		4as				
		5as				
		h20	1.88	37.55 T		

Sumary of Load Rating

	Section	Live Load	Inventory		Operating	
Interior	Shear	HL-93	3.19	114.85 T	4.14	148.88 T
	Strength 1	3s2			6.52	234.55 T
		6at			4.13	272.35
		3as			5.29	158.66 T
		4as			4.84	166.9 T
		5as			5.45	207.05 T
		h20	5.73	114.57 T	7.43	148.65 T
Exterior	Shear	HL-93	2.63	94.8 T	3.41	122.89 T
	Strength 1	3s2			5.38	193.61 T
		6at			3.41	224.81 T
		3as			4.37	130.97 T
		4as			3.99	137.76 T
		5as			4.5	170.91 T
		h20	4.73	94.66 T	6.14	122.7 T

Loading Levels	H-20	HL-93	3s2	6at	3as	4as	5as
Tonnage	20	36	36	66	30	34.5	38
Inventory	1.88	1.14					
Operating	3.07	1.86	3.25	1.71	2.27	2.07	2.63

CALDERWOOD ENGINEERING
222 RIVER ROAD
RICHMOND, ME 04357
PH. (207) 737-2007 FAX (207) 737-2008

Section Properties

Span: $L_{bear} := 44.0\ ft$

CL bearing to CL bearing

Beam length $L_{total} := L_{bear} + 15\ in \cdot 2 = 46.5\ ft$

Section Type: 47.5" Wide X 18" Deep Solid Slab

Depth: $h := 18\ in$

Width: $b := 47.5\ in$

Number of beams $N_b := 9$

Total bridge width $W := b \cdot N_b + (N_b - 1) \cdot \frac{1}{2}\ in = 35.96\ ft$ *(2) 11.5' travel lanes*

Thickness of Shear Key $t_{shearkey} := 0.75\ in$

Solid Section Properties

Gross Area of Solid Section $A_g := h \cdot b = 855\ in^2$

Moment of Inertia of Solid Section
(interior beam, no curb) $I_x := \frac{b \cdot h^3}{12} = 23085\ in^4$ $I_y := \frac{h \cdot b^3}{12} = 160757.813\ in^4$

Polar Moment of Inertia $I_p := I_x + I_y = 183842.813\ in^4$

St. Venant's Torsional Intertia,
for solid sections per C4.6.2.2.1-2
LRFD 2014 $J := \frac{A_g^4}{40 \cdot I_p} = 72670.44\ in^4$

Extreme fiber to CG $y_b := \frac{h}{2}$ $y_t := y_b$

Section Modulus Interior Beam
(no curb) $S_b := \frac{I_x}{y_b}$ $S_b = 2565\ in^3$ $S := S_b$

$S_t := \frac{I_x}{y_t}$ $S_t = 2565\ in^3$

CALDERWOOD ENGINEERING
222 RIVER ROAD
RICHMOND, ME 04357
PH. (207) 737-2007 FAX (207) 737-2008

Concrete Properties @ Service Load:

28 day concrete compressive strength	$f'_c := 6\ ksi$	$\sqrt{f'_c \cdot ksi} = 2.45\ ksi$
normal weight concrete with rebar, unit weight	$\gamma_c := 0.150\ \frac{kip}{ft^3}$	
correction factor for source of aggregate, taken as 1 (5.4.2.4)	$K_1 := 1.0$	
Concrete elastic modulus (5.4.2.4-1)	$E_c := 33000 \cdot K_1 \cdot \left(\left(\frac{\gamma_c}{\frac{kip}{ft^3}}\right)^{1.5}\right) \cdot \sqrt{f'_c \cdot ksi}$	$E_c = 4695.98\ ksi$ $E_c = 21756781923.26\ \frac{lb}{ft \cdot s^2}$

CALDERWOOD ENGINEERING
222 RIVER ROAD
RICHMOND, ME 04357
PH. (207) 737-2007 FAX (207) 737-2008

Self weight dead load (DC, DW)

Self weight dead load $w_g := A_g \cdot \gamma_c = 0.89 \ \frac{kip}{ft}$

Superimposed dead load

3" bituminous wearing surface (VTrans Structures Design Manual 5th Edition Table 3.3.1) $w_{ws} := 3 \ in \cdot 0.150 \ \frac{kip}{ft^3} \cdot b = 0.15 \ \frac{kip}{ft}$

Rail Weight (Bridge Rail Galvanized 2 Rail Box Beam Standard S-360A) $w_{rail} := 50 \ plf$

50plf (without curb) $w_{curb} := \gamma_c \cdot (2 \ ft \cdot 7 \ in) = 175 \ plf$

exterior beams carry 60%, interior beams carry 40%

Interior beams carry 40% $w_{bint} := 2 \cdot (w_{rail} + w_{curb}) \cdot \frac{0.40}{7} = 0.03 \ klf$

Exterior beams carry 60% $w_{bext} := 2 \cdot (w_{rail} + w_{curb}) \cdot \frac{0.60}{2} = 0.14 \ klf$

Unfactored Bending moment at mid-span

Self Weight $M_g := \frac{w_g \cdot L_{bear}^2}{8}$ $M_g = 215.53 \ kip \cdot ft$

Wear Surface $M_{ws} := \frac{w_{ws} \cdot L_{bear}^2}{8}$ $M_{ws} = 35.92 \ kip \cdot ft$

Rail - Interior Beam $M_{bint} := \frac{w_{bint} \cdot L_{bear}^2}{8}$ $M_{bint} = 6.22 \ kip \cdot ft$

Rail - Exterior Beam $M_{bext} := \frac{w_{bext} \cdot L_{bear}^2}{8}$ $M_{bext} = 32.67 \ kip \cdot ft$

Unfactored Shear at Supports

Self Weight - Interior Beam $V_g := \frac{w_g \cdot L_{bear}}{2}$ $V_g = 19.59 \ kip$

Wear Surface - Interior Beam $V_{ws} := \frac{w_{ws} \cdot L_{bear}}{2}$ $V_{ws} = 3.27 \ kip$

Rail - Interior Beam $V_{bint} := \frac{w_{bint} \cdot L_{bear}}{2}$ $V_{bint} = 0.57 \ kip$

Rail - Exterior Beam $V_{bext} := \frac{w_{bext} \cdot L_{bear}}{2}$ $V_{bext} = 2.97 \ kip$

see 048-br-15 Calculations/Dead Load

$IM := 33\%$ Dynamic Load Allowance per 3.6.2.1-1 (for HL-93 Loads)

CALDERWOOD ENGINEERING
222 RIVER ROAD
RICHMOND, ME 04357
PH. (207) 737-2007 FAX (207) 737-2008

Distribution Factor Method for Moment (AASHTO LRFD 4.6.2.2.2)

Table 4.6.2.2.2b-1 Distribution of Live Load for Moment, Interior Beams
concrete beams used in multibeam decks (g), two design lanes loaded

---

Two design lanes loaded:
Number of beams (Nb)
defined above

$k := 2.5 \cdot N_b^{-0.2} = 1.61$

$\text{Checkk} := \text{if } k \geq 1.5$ "OK" else "k=1.5"

$\text{Checkk} = \text{"OK"}$

$J = 72670.44\ \text{in}^4$

$I_x = 23085\ \text{in}^4$

$L_{bear} = 44\ \text{ft}$

Interior Moment Distribution Factor (gmint)
per table 4.6.2.2.2b-1, type g, two design
lanes page 4-37 (LRFD 2014)

$$g_{mint} := k \cdot \left(\frac{\left(\frac{b}{in}\right)}{305}\right)^{0.6} \cdot \left(\frac{b \cdot 12}{12.0 \cdot L_{bear}}\right)^{0.2} \cdot \left(\frac{I_x}{J}\right)^{0.06} \qquad g_{mint} = 0.304$$

NOTE: factor of 12 included above to account for MATHCAD correcting units, AASHTO already accounts for difference in units with included factor, e.g. b (inches), Lbear (feet)

Table 4.6.2.2.2d-1 Distribution of Live Load for Moment, Exterior Beams
concrete beams used in multibeam decks (g), two design lanes loaded
two 11'-6" lanes + 4'-6" shoulders => two 16' lanes + 2' curbs => 36' overall width

overall width of the bridge $\quad W = 35.96\ \text{ft}$

rail guard width (inboard distance from center of beam) $\quad b_{rail} := 0.5\ \text{ft}$

Exterior Moment Distribution Factor (gmext)

Note: distance de shall be taken as positive if the exterior web is inboard of the interior face of the traffic railing (4.6.2.2.2d-Exterior Beams)

$d_e := \frac{b}{2} - b_{rail} \qquad d_e = 1.48\ \text{ft}$

for de< 2.0, OK

For concrete box beams used in multibeam decks (em > 1.0)

$e_m := 1.04 + \frac{d_e}{25 \cdot \text{ft}} \qquad e_m = 1.1$

$g_{mext} := e_m \cdot g_{mint} \qquad g_{mext} = 0.335$

Max. Moment Load Distribution factor $\quad g_m := \max(g_{mint}, g_{mext}) \qquad g_m = 0.335$

CALDERWOOD ENGINEERING
222 RIVER ROAD
RICHMOND, ME 04357
PH. (207) 737-2007 FAX (207) 737-2008

Distribution Factor Method for Shear (AASHTO LRFD 4.6.2.2.3)

Table 4.6.2.2.3a-1 Distribution of Live Load for Shear, Interior Beams
concrete beams used in multibeam decks (g), one design lane loaded

Interior Shear Distribution Factor

Based on 4.6.2.2.3a Interior beams, the values of b, L, Nb, J and I comply with the ranges of applicability given in table 4.6.2.2.3a

$b = 47.5\ in$

$L_{bear} = 44\ ft$

$N_b = 9$

$J = 72670.44\ in^4$

$I_x = 23085\ in^4$ Therefore, Table 4.6.2.2.3a-1 is applicable

$$g_{vint} := \left(\frac{\left(\frac{b}{in}\right)}{156}\right)^{0.4} \cdot \left(\frac{b \cdot 12}{12.0 \cdot L_{bear}}\right)^{0.1} \cdot \left(\frac{I_x}{J}\right)^{0.05} \cdot \left(\frac{\left(\frac{b}{in}\right)}{48}\right) \qquad g_{vint} = 0.46$$

Exterior Shear Distribution Factor

Table 4.6.2.2.3b-1, applicable cross section (g) $d_e = 1.48\ ft$ conservative

Note: distance de shall be taken as positive if the exterior web is inboard of the interior face of the traffic railing (4.6.2.2.2d-Exterior Beams)

For concrete box beams used in multibeam decks

$$e_v := 1.0 + \left(\frac{d_e + \frac{b}{12} - 2.0\ in}{40 \cdot ft}\right)^{0.5} \qquad e_v = 1.2$$

$$g_{vext} := e_v \cdot g_{vint} \cdot 1.0 \qquad g_{vext} = 0.55$$

Skew correction for Shear Table 4.6.2.2.3c-1 $\theta := 0\ °$

$$skewfactor := 1.0 + \frac{12.0 \cdot \left(\frac{L_{bear}}{ft}\right)}{90 \cdot \left(\frac{h}{in}\right)} \cdot \sqrt{\tan(\theta)}$$

$skewfactor = 1.0$

$g_{vint} := g_{vint} \cdot skewfactor \qquad g_{vint} = 0.46$

$g_{vext} := g_{vext} \cdot skewfactor \qquad g_{vext} = 0.55 \qquad g_v := \max(g_{vint}, g_{vext}) \qquad g_v = 0.55$

DISTRIBUTION FACTORS

$g_{mint} := 0.304 \qquad g_{vint} := 0.46$

$g_{mext} := 0.335 \qquad g_{vext} := 0.55$

USER NOTE: Input max distribution factors to excel sheets for int. & ext. Live Load Moment and Shear calcs.

4.3.2 Live Load Distribution

The LRFD Specifications provides the equations and tables for live load distribution factors. See LRFD Section 4.6.2.2. For typical beam bridges, distribution factors are provided for interior beam flexure (single lane, multiple lanes, and fatigue), Interior beam shear (single lane, multiple lanes, and fatigue). Use controlling value of the lever rule and AASHTO distribution formulas to determine the amount of live load carried by the exterior beam. LRFD C4.6.2.2.2d provides a formula for computation of an additional distribution factor for bridges that have diaphragms or cross-frames. Use of the rigid cross-section or pile-equation distribution factor is not required for design of exterior beams.

For the interior and exterior beams, the designer shall use the controlling (or larger) distribution factor calculated for one lane loaded, two lanes loaded or three or more lanes loaded for flexure. Do the same for shear for locations within the span and at the supports. The controlling distribution factor will be the larger of these.

When checking deflection, the distribution factor shall be the maximum number of lanes loaded divided by the number of beams and multiplied by the respective multiple-presence factor.

The designer shall also calculate the fatigue distribution factors similarly as above except only consider one lane loaded.

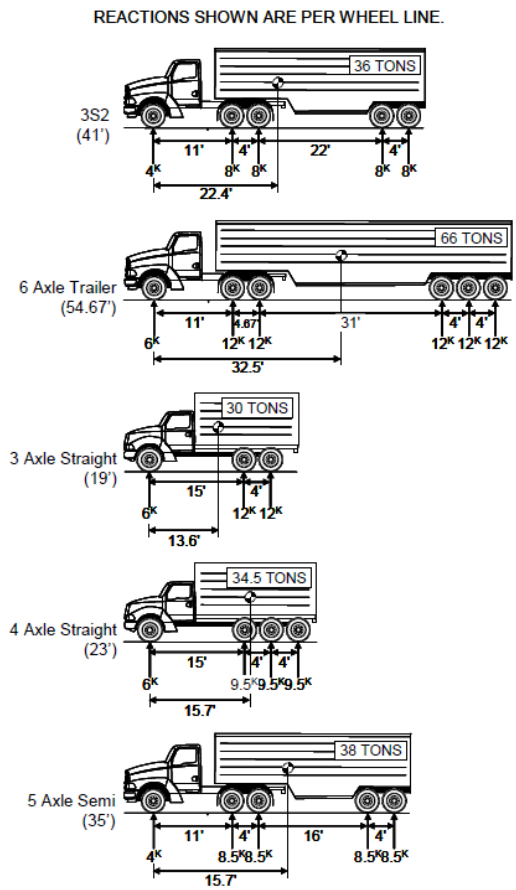

Figure 15.2-1 Vermont Standard Load Rating Trucks

CALDERWOOD ENGINEERING
222 RIVER ROAD
RICHMOND, ME 04357
PH. (207) 737-2007 FAX (207) 737-2008

3S2 truck
per VTrans Structures Mnl 2010 section 15.2 not distributed without impact, both wheel lines

3S2 Truck								
3S2								
Distance	Vmax	Mmin	Mmax		No	Rmin	Rmax	
0.00	42.7	0.0	0.0		1	0.0	42.7	
1.00	41.1	0.0	41.1		2	0.0	42.2	
2.00	39.5	0.0	78.9					
3.00	37.8	0.0	113.5					
4.00	36.4	0.0	145.5					
5.00	34.9	0.0	174.5					
6.00	33.5	0.0	200.7					
7.00	32.0	0.0	224.0					
8.00	30.5	0.0	244.4					
9.00	29.1	0.0	261.8					
10.00	27.6	0.0	276.4					
11.00	26.2	0.0	288.0					
12.00	24.9	0.0	302.5					
13.00	24.0	0.0	314.2					
14.00	23.1	0.0	323.3					
15.00	22.2	0.0	332.7					
16.00	21.3	0.0	340.4					
17.00	20.4	0.0	346.2					
18.00	19.5	0.0	351.6					
19.00	18.5	0.0	357.5					
20.00	17.6	0.0	361.5					
21.00	16.7	0.0	363.6					
22.00	15.8	0.0	364.0					
23.00	14.5	0.0	362.5					
24.00	15.3	0.0	359.3					
25.00	16.0	0.0	354.2					
26.00	16.7	0.0	347.3					
27.00	17.5	0.0	344.7					
28.00	18.2	0.0	339.6		Mmax=		364.0	k-ft
29.00	18.9	0.0	332.0		Mmin=		0.0	k-ft
30.00	20.0	0.0	322.9		Vmax=		42.7	kips

$M_{max3s2} = 364$ ft·kip $\qquad V_{max3s2} = 42.73$ kip

CALDERWOOD ENGINEERING
222 RIVER ROAD
RICHMOND, ME 04357
PH. (207) 737-2007 FAX (207) 737-2008

6 Axle Trailer truck
per VTrans Structures Mnl 2010 section 15.2 not distributed without impact - both wheel lines

6 Axle Trailer

6 AXLE Trailer

Distance	Vmax	Mmin	Mmax	No	Rmin	Rmax	
0.00	67.5	0.0	0.0	1	0.0	67.5	
1.00	65.3	0.0	65.3	2	0.0	64.4	
2.00	63.1	0.0	126.2				
3.00	60.9	0.0	182.7				
4.00	58.7	0.0	234.9				
5.00	56.7	0.0	283.7				
6.00	55.1	0.0	330.6				
7.00	53.5	0.0	374.2				
8.00	51.8	0.0	414.6				
9.00	50.2	0.0	451.7				
10.00	48.6	0.0	485.8				
11.00	46.9	0.0	518.0				
12.00	45.3	0.0	546.9				
13.00	43.6	0.0	572.5				
14.00	42.0	0.0	594.9				
15.00	40.4	0.0	615.6				
16.00	38.7	0.0	636.4				
17.00	37.1	0.0	653.8				
18.00	35.5	0.0	668.0				
19.00	33.8	0.0	678.9				
20.00	32.2	0.0	686.6				
21.00	30.6	0.0	690.9				
22.00	28.9	0.0	692.0				
23.00	30.0	0.0	689.9				
24.00	31.6	0.0	684.4				
25.00	33.3	0.0	676.5				
26.00	34.9	0.0	666.2				
27.00	36.5	0.0	652.5				
28.00	38.2	0.0	635.6	Mmax		692.0	k-ft
29.00	39.8	0.0	615.5	Mmin		0.0	k-ft
30.00	41.4	0.0	595.3	Vmax		67.5	kips

$M_{max6at} = 692.04$ ft·kip $\qquad V_{max6at} = 67.46$ kip

CALDERWOOD ENGINEERING
222 RIVER ROAD
RICHMOND, ME 04357
PH. (207) 737-2007 FAX (207) 737-2008

3 Axle Straight truck
per VTrans Structures Mnl 2010 section 15.2 not distributed without impact both wheel lines

3 Axle Straight								
3 AXLE Trailer								
Distance	Vmax	Mmin	Mmax		No	Rmin	Rmax	
0.00	52.6	0.0	0.0		1	0.0	52.6	
1.00	51.3	0.0	51.3		2	0.0	45.8	
2.00	49.9	0.0	99.8					
3.00	48.5	0.0	145.6					
4.00	47.2	0.0	188.7					
5.00	45.8	0.0	229.1					
6.00	44.5	0.0	266.7					
7.00	43.1	0.0	301.6					
8.00	41.7	0.0	333.8					
9.00	40.4	0.0	363.3					
10.00	39.0	0.0	390.0					
11.00	37.6	0.0	414.0					
12.00	36.3	0.0	435.3					
13.00	34.9	0.0	453.8					
14.00	33.5	0.0	469.6					
15.00	32.2	0.0	482.7					
16.00	30.8	0.0	493.1					
17.00	29.5	0.0	500.7					
18.00	28.1	0.0	507.8					
19.00	26.7	0.0	515.5					
20.00	25.4	0.0	520.4					
21.00	24.0	0.0	522.5					
22.00	22.6	0.0	522.0					
23.00	21.3	0.0	518.7					
24.00	21.3	0.0	512.7					
25.00	22.6	0.0	504.0					
26.00	24.0	0.0	492.5					
27.00	25.4	0.0	478.4					
28.00	26.7	0.0	461.5		Mmax		522.5	k-ft
29.00	28.1	0.0	441.8		Mmin		0.0	k-ft
30.00	29.5	0.0	427.6		Vmax		52.6	kips

$M_{max3as} = 522.55$ ft·kip $\qquad V_{max3as} = 52.64$ kip

CALDERWOOD ENGINEERING
222 RIVER ROAD
RICHMOND, ME 04357
PH. (207) 737-2007 FAX (207) 737-2008

4 Axle Straight truck
per VTrans Structures Mnl 2010 section 15.2 not distributed without impact both wheel lines

4 Axle Straight								
4 AXLE Trailer								
Distance	Vmax	Mmin	Mmax		No	Rmin	Rmax	
0.00	57.5	0.0	0.0		1	0.0	57.5	
1.00	56.0	0.0	56.0		2	0.0	51.8	
2.00	54.4	0.0	108.8					
3.00	52.8	0.0	158.5					
4.00	51.3	0.0	205.1					
5.00	49.7	0.0	248.5					
6.00	48.1	0.0	288.8					
7.00	46.6	0.0	326.0					
8.00	45.0	0.0	360.0					
9.00	43.4	0.0	390.9					
10.00	41.9	0.0	418.6					
11.00	40.3	0.0	443.3					
12.00	38.7	0.0	464.7					
13.00	37.2	0.0	488.6					
14.00	35.6	0.0	510.1					
15.00	34.0	0.0	528.4					
16.00	32.5	0.0	543.6					
17.00	30.9	0.0	555.7					
18.00	29.3	0.0	564.6					
19.00	27.8	0.0	570.4					
20.00	26.2	0.0	573.1					
21.00	24.6	0.0	572.6					
22.00	23.3	0.0	569.0					
23.00	22.0	0.0	562.3					
24.00	23.0	0.0	552.4					
25.00	24.5	0.0	544.2					
26.00	26.1	0.0	534.3					
27.00	27.7	0.0	521.3					
28.00	29.3	0.0	505.1		Mmax		573.1	k-ft
29.00	30.8	0.0	487.5					
30.00	32.4	0.0	471.5		Vmax		57.5	kips
31.00	33.7	0.0	454.7					
32.00	35.0	0.0	435.3					

$M_{max4as} = 573.09$ ft·kip $\qquad V_{max4as} = 57.55$ kip

CALDERWOOD ENGINEERING
222 RIVER ROAD
RICHMOND, ME 04357
PH. (207) 737-2007 FAX (207) 737-2008

5 Axle Semi - per
VTrans Structures Manual 2010 section 15.2 35' truck unfactored without dynamic load allowance, both wheel lines

5 Axle Semi								
5 AXLE Trailer								
Distance	Vmax	Mmin	Mmax		No	Rmin	Rmax	
0.00	51.1	0.0	0.0		1	0.0	51.1	
1.00	49.4	0.0	49.4		2	0.0	49.5	
2.00	47.6	0.0	95.3					
3.00	45.9	0.0	137.7					
4.00	44.2	0.0	176.7					
5.00	42.5	0.0	212.3					
6.00	40.7	0.0	244.4					
7.00	39.0	0.0	273.0					
8.00	37.3	0.0	298.2					
9.00	35.5	0.0	319.9					
10.00	34.0	0.0	340.0					
11.00	32.5	0.0	361.0					
12.00	30.9	0.0	379.3					
13.00	29.4	0.0	394.1					
14.00	27.8	0.0	408.0					
15.00	26.3	0.0	418.8					
16.00	24.7	0.0	426.5					
17.00	23.2	0.0	431.2					
18.00	21.6	0.0	432.7					
19.00	20.1	0.0	431.2					
20.00	18.5	0.0	426.5					
21.00	17.4	0.0	424.6					
22.00	16.2	0.0	436.0					
23.00	15.1	0.0	443.9					
24.00	15.6	0.0	448.4					
25.00	16.9	0.0	449.4					
26.00	18.6	0.0	446.9					
27.00	20.4	0.0	441.0					
28.00	22.1	0.0	431.6		Mmax		449.4	k-ft
29.00	23.8	0.0	418.8					
30.00	25.5	0.0	408.0		Vmax		51.1	kips

$M_{max5as} = 449.36\ \text{ft}\cdot\text{kip}$ $V_{max5as} = 51.09\ \text{kip}$

CALDERWOOD ENGINEERING
222 RIVER ROAD
RICHMOND, ME 04357
PH. (207) 737-2007 FAX (207) 737-2008

H 20 load unfactored - undistributed without dynamic load allowance - both wheel lines

H 20								
H-20								
Distance	Vmax	Mmin	Mmax		No	Rmin	Rmax	
0.00	37.5	0.0	0.0		1	0.0	37.5	
1.00	36.5	0.0	36.5		2	0.0	32.0	
2.00	35.6	0.0	71.3					
3.00	34.7	0.0	104.2					
4.00	33.8	0.0	135.3					
5.00	32.9	0.0	164.5					
6.00	32.0	0.0	192.0					
7.00	31.1	0.0	217.6					
8.00	30.2	0.0	241.5					
9.00	29.3	0.0	263.5					
10.00	28.4	0.0	283.6					
11.00	27.5	0.0	302.0					
12.00	26.5	0.0	318.5					
13.00	25.6	0.0	333.3					
14.00	24.7	0.0	346.2					
15.00	23.8	0.0	357.3					
16.00	22.9	0.0	366.5					
17.00	22.0	0.0	374.0					
18.00	21.1	0.0	379.6					
19.00	20.2	0.0	383.5					
20.00	19.3	0.0	385.5					
21.00	18.4	0.0	385.6					
22.00	17.5	0.0	384.0					
23.00	16.5	0.0	380.5					
24.00	15.6	0.0	375.3					
25.00	16.4	0.0	368.2					
26.00	17.3	0.0	359.3					
27.00	18.2	0.0	348.5					
28.00	19.1	0.0	336.0		Mmax		385.6	k-ft
29.00	20.0	0.0	321.6					
30.00	20.9	0.0	305.5		Vmax		37.5	kips

$M_{maxh20} = 385.64$ ft·kip $V_{maxh20} = 37.45$ kip

CALDERWOOD ENGINEERING
222 RIVER ROAD
RICHMOND, ME 04357
PH. (207) 737-2007 FAX (207) 737-2008

HS 20 load unfactored - undistributed without dynamic load allowance, both wheel lines

HS20 Truck								
HS-20								
Distance	Vmax	Mmin	Mmax		No	Rmin	Rmax	
0.00	56.7	0.0	0.0		1	0.0	56.7	
1.00	55.1	0.0	55.1		2	0.0	53.8	
2.00	53.5	0.0	106.9					
3.00	51.8	0.0	155.5					
4.00	50.2	0.0	200.7					
5.00	48.5	0.0	242.7					
6.00	46.9	0.0	281.5					
7.00	45.3	0.0	316.9					
8.00	43.6	0.0	349.1					
9.00	42.0	0.0	378.0					
10.00	40.4	0.0	403.6					
11.00	38.7	0.0	426.0					
12.00	37.1	0.0	445.1					
13.00	35.5	0.0	460.9					
14.00	33.8	0.0	473.5					
15.00	32.2	0.0	482.7					
16.00	30.5	0.0	488.7					
17.00	29.1	0.0	494.5					
18.00	27.6	0.0	497.5					
19.00	26.2	0.0	497.5					
20.00	24.7	0.0	494.5					
21.00	23.3	0.0	502.7					
22.00	21.8	0.0	512.0					
23.00	20.4	0.0	518.0					
24.00	22.0	0.0	520.7					
25.00	23.6	0.0	520.2					
26.00	25.3	0.0	516.4					
27.00	26.9	0.0	509.3					
28.00	28.5	0.0	498.9		Mmax=		520.7	k-ft
29.00	30.2	0.0	485.3					
30.00	31.8	0.0	468.4		Vmax=		56.7	kips
31.00	33.5	0.0	453.8					
32.00	34.9	0.0	436.4					

$M_{maxhs20} = 520.73\ ft{\cdot}kip$ $V_{maxhs20} = 56.73\ kip$

CALDERWOOD ENGINEERING
222 RIVER ROAD
RICHMOND, ME 04357
PH. (207) 737-2007 FAX (207) 737-2008

LRFD 3.6.1.2.3

Design Tandem Load,
Unfactored, Undistributed, with no dynamic load allowance

Tandem								
Tandem								
Distance	Vmax	Mmin	Mmax		No	Rmin	Rmax	
0.00	47.7	0.0	0.0		1	0.0	47.7	
1.00	46.6	0.0	46.6		2	0.0	47.7	
2.00	45.5	0.0	90.9					
3.00	44.3	0.0	133.0					
4.00	43.2	0.0	172.7					
5.00	42.0	0.0	210.2					
6.00	40.9	0.0	245.5					
7.00	39.8	0.0	278.4					
8.00	38.6	0.0	309.1					
9.00	37.5	0.0	337.5					
10.00	36.4	0.0	363.6					
11.00	35.2	0.0	387.5					
12.00	34.1	0.0	409.1					
13.00	33.0	0.0	428.4					
14.00	31.8	0.0	445.5					
15.00	30.7	0.0	460.2					
16.00	29.5	0.0	472.7					
17.00	28.4	0.0	483.0					
18.00	27.3	0.0	490.9					
19.00	26.1	0.0	496.6					
20.00	25.0	0.0	500.0					
21.00	23.9	0.0	501.1					
22.00	22.7	0.0	500.0					
23.00	22.7	0.0	501.1					
24.00	23.9	0.0	500.0					
25.00	25.0	0.0	496.6					
26.00	26.1	0.0	490.9					
27.00	27.3	0.0	483.0					
28.00	28.4	0.0	472.7		Mmax=		501.1	k-ft
29.00	29.5	0.0	460.2					
30.00	30.7	0.0	445.5		Vmax=		47.7	kips
31.00	31.8	0.0	428.4					
32.00	33.0	0.0	409.1					
33.00	34.1	0.0	387.5					
34.00	35.2	0.0	363.6					
35.00	36.4	0.0	337.5					
36.00	37.5	0.0	309.1					
37.00	38.6	0.0	278.4					
38.00	39.8	0.0	245.5					
39.00	40.9	0.0	210.2					
40.00	42.0	0.0	172.7					
41.00	43.2	0.0	133.0					
42.00	44.3	0.0	90.9					
43.00	45.5	0.0	46.6					
44.00	47.7	0.0	0.0					

$M_{maxtan} = 501.14$ ft·kip $\qquad V_{maxtan} = 47.73$ kip

CALDERWOOD ENGINEERING
222 RIVER ROAD
RICHMOND, ME 04357
PH. (207) 737-2007 FAX (207) 737-2008

Design Lane Load,
Unfactored, Undistributed, with no dynamic load allowance

Results

Lane Load filename: Uniform Load (44ft span)

L (ft)	Wlane (kip/ft)
44	0.64

Distance	Vmax (kip)	Mmax (kip-ft)
0.00	14.08	0.00
1.00	13.44	13.76
2.00	12.80	26.88
3.00	12.16	39.36
4.00	11.52	51.20
5.00	10.88	62.40
6.00	10.24	72.96
7.00	9.60	82.88
8.00	8.96	92.16
9.00	8.32	100.80
10.00	7.68	108.80
11.00	7.04	116.16
12.00	6.40	122.88
13.00	5.76	128.96
14.00	5.12	134.40
15.00	4.48	139.20
16.00	3.84	143.36
17.00	3.20	146.88
18.00	2.56	149.76
19.00	1.92	152.00
20.00	1.28	153.60
21.00	0.64	154.56
22.00	0.00	154.88
23.00	-0.64	154.56

Mmax (kip-ft)	154.88	kip-ft
Vmax (kip)	14.08	kip

$$M_{maxlane} = 154.88 \ \text{kip} \cdot \text{ft}$$
$$V_{maxlane} = 14.08 \ \text{kip}$$

CALDERWOOD ENGINEERING
222 RIVER ROAD
RICHMOND, ME 04357
PH. (207) 737-2007 FAX (207) 737-2008

Truck & Dead Load Moment, Shear & Truck Weight Summary

	Moment	Shear	Truck Weights
3S2	$M_{max3s2} = 364\ ft{\cdot}kip$	$V_{max3s2} = 42.73\ kip$	$W_{3s2} := 36\ tonf = 72\ kip$
6 Axle Trailer	$M_{max6at} = 692.04\ ft{\cdot}kip$	$V_{max6at} = 67.46\ kip$	$W_{6at} := 66\ tonf = 132\ kip$
3 Axle Straight	$M_{max3as} = 522.55\ ft{\cdot}kip$	$V_{max3as} = 52.64\ kip$	$W_{3as} := 30\ tonf = 60\ kip$
4 Axle Straight	$M_{max4as} = 573.09\ ft{\cdot}kip$	$V_{max4as} = 57.55\ kip$	$W_{4as} := 34.5\ tonf = 69\ kip$
5 Axle Straight	$M_{max5as} = 449.36\ ft{\cdot}kip$	$V_{max5as} = 51.09\ kip$	$W_{5as} := 38\ tonf = 76\ kip$
H20	$M_{maxh20} = 385.64\ ft{\cdot}kip$	$V_{maxh20} = 37.45\ kip$	$W_{h20} := 20\ tonf = 40\ kip$
HS20 (HL93 Truck)	$M_{maxhs20} = 520.73\ ft{\cdot}kip$	$V_{maxhs20} = 56.73\ kip$	$W_{hs20} := 36\ tonf = 72\ kip$
Tandem Truck	$M_{maxtan} = 501.14\ ft{\cdot}kip$	$V_{maxtan} = 47.73\ kip$	
Lane	$M_{maxlane} = 154.88\ kip \cdot ft$	$V_{maxlane} = 14.08\ kip$	
Beam Self Weight	$M_g = 215.53\ kip \cdot ft$	$V_g = 19.59\ kip$	
Wear Surface	$M_{ws} = 35.92\ kip \cdot ft$	$V_{ws} = 3.27\ kip$	
Rail (Interior Beam)	$M_{bint} = 6.22\ kip \cdot ft$	$V_{bint} = 0.57\ kip$	
Rail (Exterior Beam)	$M_{bext} = 32.67\ kip \cdot ft$	$V_{bext} = 2.97\ kip$	

CALDERWOOD ENGINEERING
222 RIVER ROAD
RICHMOND, ME 04357
PH. (207) 737-2007 FAX (207) 737-2008

Live Load Flexural moment interior beam:

$Mi_{hs20} := g_{mint} \cdot (100\% + IM) \cdot \max\langle M_{maxhs20}, M_{maxtan}\rangle = 210.54$ ft·kip HS20 controls over tandem

$Mi_{lane} := g_{mint} \cdot M_{maxlane} = 47.08$ ft·kip

$Mi_{3s2} := g_{mint} \cdot (100\% + IM) \cdot M_{max3s2} = 147.17$ ft·kip

$Mi_{6at} := g_{mint} \cdot (100\% + IM) \cdot M_{max6at} = 279.81$ ft·kip

$Mi_{3as} := g_{mint} \cdot (100\% + IM) \cdot M_{max3as} = 211.28$ ft·kip

$Mi_{4as} := g_{mint} \cdot (100\% + IM) \cdot M_{max4as} = 231.71$ ft·kip

$Mi_{5as} := g_{mint} \cdot (100\% + IM) \cdot M_{max5as} = 181.69$ ft·kip

$Mi_{h20} := g_{mint} \cdot (100\% + IM) \cdot M_{maxh20} = 155.92$ ft·kip

Live Load Flexural moment exterior beam:

$Me_{hs20} := g_{mext} \cdot (100\% + IM) \cdot \max\langle M_{maxhs20}, M_{maxtan}\rangle = 232.01$ ft·kip HS20 controls over tandem

$Me_{lane} := g_{mext} \cdot M_{maxlane} = 51.88$ ft·kip

$Me_{3s2} := g_{mext} \cdot (100\% + IM) \cdot M_{max3s2} = 162.18$ ft·kip

$Me_{6at} := g_{mext} \cdot (100\% + IM) \cdot M_{max6at} = 308.34$ ft·kip

$Me_{3as} := g_{mext} \cdot (100\% + IM) \cdot M_{max3as} = 232.82$ ft·kip

$Me_{4as} := g_{mext} \cdot (100\% + IM) \cdot M_{max4as} = 255.34$ ft·kip

$Me_{5as} := g_{mext} \cdot (100\% + IM) \cdot M_{max5as} = 200.21$ ft·kip

$Me_{h20} := g_{mext} \cdot (100\% + IM) \cdot M_{maxh20} = 171.82$ ft·kip

CALDERWOOD ENGINEERING
222 RIVER ROAD
RICHMOND, ME 04357
PH. (207) 737-2007 FAX (207) 737-2008

STRENGTH 1

Flexural Capacity for Strength 1:

$M_r := 12914.672\ kip \cdot in = 1076.22\ kip \cdot ft$

$V_r := 260.023\ kip$

Strength 1: Table 6A.4.2.2-1- Load Factors

Prestressed Concrete Strength 1 Dead Load (DC) $\gamma_{DCSTR1} := 1.25$

Prestressed Concrete Strength 1 Dead Load (DW) $\gamma_{DWSTR1} := 1.50$

Prestressed Concrete Strength 1 Design Inventory Live Load $\gamma_{INVSTR1} := 1.75$

Prestressed Concrete Strength 1 Design Operating Live Load $\gamma_{OPSTR1} := 1.35$

Moment Capacity $C_{mom} := M_r = 1076.22\ ft \cdot kip$

Factored Dead Load $Dead_{int} := \gamma_{DCSTR1} \cdot \langle M_g + M_{bint} \rangle + \gamma_{DWSTR1} \cdot \langle M_{ws} \rangle = 331.08\ ft \cdot kip$

$Dead_{ext} := \gamma_{DCSTR1} \cdot \langle M_g + M_{bext} \rangle + \gamma_{DWSTR1} \cdot \langle M_{ws} \rangle = 364.13\ ft \cdot kip$

CALDERWOOD ENGINEERING
222 RIVER ROAD
RICHMOND, ME 04357
PH. (207) 737-2007 FAX (207) 737-2008

Rating Factors, Moment Interior Flexure Strength 1:

$$InvRFStr1_{MI_hl93} := \frac{C_{mom} - Dead_{int}}{\gamma_{INVSTR1} \cdot \langle Mi_{hs20} + Mi_{lane} \rangle} = 1.65$$

$$OpRFStr1_{MI_hl93} := \frac{C_{mom} - Dead_{int}}{\gamma_{OPSTR1} \cdot \langle Mi_{hs20} + Mi_{lane} \rangle} = 2.14$$

$$OpRFStr1_{MI_3s2} := \frac{C_{mom} - Dead_{int}}{\gamma_{OPSTR1} \cdot \langle Mi_{3s2} \rangle} = 3.75$$

$$OpRFStr1_{MI_6at} := \frac{C_{mom} - Dead_{int}}{\gamma_{OPSTR1} \cdot \langle Mi_{6at} \rangle} = 1.97$$

$$OpRFStr1_{MI_3as} := \frac{C_{mom} - Dead_{int}}{\gamma_{OPSTR1} \cdot \langle Mi_{3as} \rangle} = 2.61$$

$$OpRFStr1_{MI_4as} := \frac{C_{mom} - Dead_{int}}{\gamma_{OPSTR1} \cdot \langle Mi_{4as} \rangle} = 2.38$$

$$OpRFStr1_{MI_5as} := \frac{C_{mom} - Dead_{int}}{\gamma_{OPSTR1} \cdot \langle Mi_{5as} \rangle} = 3.04$$

$$InvRFStr1_{MI_h20} := \frac{C_{mom} - Dead_{int}}{\gamma_{INVSTR1} \cdot \langle Mi_{h20} \rangle} = 2.73$$

$$OpRFStr1_{MI_h20} := \frac{C_{mom} - Dead_{int}}{\gamma_{OPSTR1} \cdot \langle Mi_{h20} \rangle} = 3.54$$

Interior Beam Flexure Rating:

$$InvRStr1_{MI_hl93} := InvRFStr1_{MI_hl93} \cdot W_{hs20} = 59.5 \text{ tonf}$$

$$OpRStr1_{MI_hl93} := OpRFStr1_{MI_hl93} \cdot W_{hs20} = 77.13 \text{ tonf}$$

$$OpRStr1_{MI_3s2} := OpRFStr1_{MI_3s2} \cdot W_{3s2} = 135.02 \text{ tonf}$$

$$OpRStr1_{MI_6at} := OpRFStr1_{MI_6at} \cdot W_{6at} = 130.2 \text{ tonf}$$

$$OpRStr1_{MI_3as} := OpRFStr1_{MI_3as} \cdot W_{3as} = 78.38 \text{ tonf}$$

$$OpRStr1_{MI_4as} := OpRFStr1_{MI_4as} \cdot W_{4as} = 82.18 \text{ tonf}$$

$$OpRStr1_{MI_5as} := OpRFStr1_{MI_5as} \cdot W_{5as} = 115.44 \text{ tonf}$$

$$InvRStr1_{MI_h20} := InvRFStr1_{MI_h20} \cdot W_{h20} = 54.62 \text{ tonf}$$

$$OpRStr1_{MI_h20} := OpRFStr1_{MI_h20} \cdot W_{h20} = 70.8 \text{ tonf}$$

$$InvRStr1_{MI} := min\langle InvRStr1_{MI_hl93}, InvRStr1_{MI_h20} \rangle$$

$$OpRStr1_{MI} := min\langle OpRStr1_{MI_hl93}, OpRStr1_{MI_3s2}, OpRStr1_{MI_6at}, OpRStr1_{MI_3as}, OpRStr1_{MI_4as}, OpRStr1_{MI_5as}, OpRStr1_{MI_h20} \rangle$$

$$InvRStr1_{MI} = 54.62 \text{ tonf}$$

$$OpRStr1_{MI} = 70.8 \text{ tonf}$$

Rating Factors, Moment Exterior Flexure Strength 1:

$$InvRFStr1_{ME_hl93} := \frac{C_{mom} - Dead_{ext}}{\gamma_{INVSTR1} \cdot \langle Me_{hs20} + Me_{lane} \rangle} = 1.43$$

$$OpRFStr1_{ME_hl93} := \frac{C_{mom} - Dead_{ext}}{\gamma_{OPSTR1} \cdot \langle Me_{hs20} + Me_{lane} \rangle} = 1.86$$

$$OpRFStr1_{ME_3s2} := \frac{C_{mom} - Dead_{ext}}{\gamma_{OPSTR1} \cdot \langle Me_{3s2} \rangle} = 3.25$$

$$OpRFStr1_{ME_6at} := \frac{C_{mom} - Dead_{ext}}{\gamma_{OPSTR1} \cdot \langle Me_{6at} \rangle} = 1.71$$

$$OpRFStr1_{ME_3as} := \frac{C_{mom} - Dead_{ext}}{\gamma_{OPSTR1} \cdot \langle Me_{3as} \rangle} = 2.27$$

$$OpRFStr1_{ME_4as} := \frac{C_{mom} - Dead_{ext}}{\gamma_{OPSTR1} \cdot \langle Me_{4as} \rangle} = 2.07$$

$$OpRFStr1_{ME_5as} := \frac{C_{mom} - Dead_{ext}}{\gamma_{OPSTR1} \cdot \langle Me_{5as} \rangle} = 2.63$$

$$InvRFStr1_{ME_h20} := \frac{C_{mom} - Dead_{ext}}{\gamma_{INVSTR1} \cdot \langle Me_{h20} \rangle} = 2.37$$

$$OpRFStr1_{ME_h20} := \frac{C_{mom} - Dead_{ext}}{\gamma_{OPSTR1} \cdot \langle Me_{h20} \rangle} = 3.07$$

Strength 1 Moment Exterior Beam Rating:

$$InvRStr1_{ME_hl93} := InvRFStr1_{ME_hl93} \cdot W_{hs20} = 51.6 \text{ tonf}$$

$$OpRStr1_{ME_hl93} := OpRFStr1_{ME_hl93} \cdot W_{hs20} = 66.89 \text{ tonf}$$

$$OpRFStr1_{ME_3s2} := OpRFStr1_{ME_3s2} \cdot W_{3s2} = 117.09 \text{ tonf}$$

$$OpRStr1_{ME_6at} := OpRFStr1_{ME_6at} \cdot W_{6at} = 112.91 \text{ tonf}$$

$$OpRStr1_{ME_3as} := OpRFStr1_{ME_3as} \cdot W_{3as} = 67.97 \text{ tonf}$$

$$OpRStr1_{ME_4as} := OpRFStr1_{ME_4as} \cdot W_{4as} = 71.27 \text{ tonf}$$

$$OpRStr1_{ME_5as} := OpRFStr1_{ME_5as} \cdot W_{5as} = 100.11 \text{ tonf}$$

$$InvRStr1_{ME_h20} := InvRFStr1_{ME_h20} \cdot W_{h20} = 47.36 \text{ tonf}$$

$$OpRStr1_{ME_h20} := OpRFStr1_{ME_h20} \cdot W_{h20} = 61.4 \text{ tonf}$$

$$InvRStr1_{ME} := min\langle InvRStr1_{ME_hl93}, InvRStr1_{ME_h20} \rangle$$

$$OpRStr1_{ME} := min\langle OpRStr1_{ME_hl93}, OpRFStr1_{ME_3s2}, OpRStr1_{ME_6at}, OpRStr1_{ME_3as}, OpRStr1_{ME_4as}, OpRStr1_{ME_5as}, OpRStr1_{ME_h20} \rangle$$

$$InvRStr1_{ME} = 47.36 \text{ tonf}$$

$$OpRStr1_{ME} = 61.4 \text{ tonf}$$

CALDERWOOD ENGINEERING
222 RIVER ROAD
RICHMOND, ME 04357
PH. (207) 737-2007 FAX (207) 737-2008

SHEAR INTERIOR, STRENGTH 1

Shear Capacity $C_v := V_r = 260.02$ kip

Factored Dead Load $Dv_{int} := \gamma_{DCSTR1} \cdot \langle V_g + V_{bint} \rangle + \gamma_{DWSTR1} \cdot \langle V_{ws} \rangle = 30.1$ kip

$Dv_{ext} := \gamma_{DCSTR1} \cdot \langle V_g + V_{bext} \rangle + \gamma_{DWSTR1} \cdot \langle V_{ws} \rangle = 33.1$ kip

Live Load Shear Interior beam

$Vi_{hs20} := g_{vint} \cdot (100\% + IM) \cdot \max \langle V_{maxhs20}, V_{maxtan} \rangle = 34.71$ kip HS20 controls over tandem

$Vi_{lane} := g_{vint} \cdot V_{maxlane} = 6.48$ kip

$Vi_{3s2} := g_{vint} \cdot (100\% + IM) \cdot V_{max3s2} = 26.14$ kip

$Vi_{6at} := g_{vint} \cdot (100\% + IM) \cdot V_{max6at} = 41.27$ kip

$Vi_{3as} := g_{vint} \cdot (100\% + IM) \cdot V_{max3as} = 32.2$ kip

$Vi_{4as} := g_{vint} \cdot (100\% + IM) \cdot V_{max4as} = 35.21$ kip

$Vi_{5as} := g_{vint} \cdot (100\% + IM) \cdot V_{max5as} = 31.26$ kip

$Vi_{h20} := g_{vint} \cdot (100\% + IM) \cdot V_{maxh20} = 22.91$ kip

Live Load Shear Exterior beam:

$Ve_{hs20} := g_{vext} \cdot (100\% + IM) \cdot \max \langle V_{maxhs20}, V_{maxtan} \rangle = 41.5$ kip HS20 controls over tandem

$Ve_{lane} := g_{vext} \cdot V_{maxlane} = 7.74$ kip

$Ve_{3s2} := g_{vext} \cdot (100\% + IM) \cdot V_{max3s2} = 31.26$ kip

$Ve_{6at} := g_{vext} \cdot (100\% + IM) \cdot V_{max6at} = 49.35$ kip

$Ve_{3as} := g_{vext} \cdot (100\% + IM) \cdot V_{max3as} = 38.5$ kip

$Ve_{4as} := g_{vext} \cdot (100\% + IM) \cdot V_{max4as} = 42.09$ kip

$Ve_{5as} := g_{vext} \cdot (100\% + IM) \cdot V_{max5as} = 37.37$ kip

$Ve_{h20} := g_{vext} \cdot (100\% + IM) \cdot V_{maxh20} = 27.4$ kip

CALDERWOOD ENGINEERING
222 RIVER ROAD
RICHMOND, ME 04357
PH. (207) 737-2007 FAX (207) 737-2008

Rating Factors, Shear Interior Strength 1:

$$InvRFStr1_{VI_hl93} := \frac{C_v - Dv_{int}}{\gamma_{INVSTR1} \cdot \langle Vi_{hs20} + Vi_{lane} \rangle} = 3.19$$

$$OpRFStr1_{VI_hl93} := \frac{C_v - Dv_{int}}{\gamma_{OPSTR1} \cdot \langle Vi_{hs20} + Vi_{lane} \rangle} = 4.14$$

$$OpRFStr1_{VI_3s2} := \frac{C_v - Dv_{int}}{\gamma_{OPSTR1} \cdot \langle Vi_{3s2} \rangle} = 6.52$$

$$OpRFStr1_{VI_6at} := \frac{C_v - Dv_{int}}{\gamma_{OPSTR1} \cdot \langle Vi_{6at} \rangle} = 4.13$$

$$OpRFStr1_{VI_3as} := \frac{C_v - Dv_{int}}{\gamma_{OPSTR1} \cdot \langle Vi_{3as} \rangle} = 5.29$$

$$OpRFStr1_{VI_4as} := \frac{C_v - Dv_{int}}{\gamma_{OPSTR1} \cdot \langle Vi_{4as} \rangle} = 4.84$$

$$OpRFStr1_{VI_5as} := \frac{C_v - Dv_{int}}{\gamma_{OPSTR1} \cdot \langle Vi_{5as} \rangle} = 5.45$$

$$InvRFStr1_{VI_h20} := \frac{C_v - Dv_{int}}{\gamma_{INVSTR1} \cdot \langle Vi_{h20} \rangle} = 5.73$$

$$OpRFStr1_{VI_h20} := \frac{C_v - Dv_{int}}{\gamma_{OPSTR1} \cdot \langle Vi_{h20} \rangle} = 7.43$$

Shear Interior Beam Rating:

$$InvRStr1_{VI_hl93} := InvRFStr1_{VI_hl93} \cdot W_{hs20} = 114.85 \text{ tonf}$$

$$OpRStr1_{VI_hl93} := OpRFStr1_{VI_hl93} \cdot W_{hs20} = 148.88 \text{ tonf}$$

$$OpRStr1_{VI_3s2} := OpRFStr1_{VI_3s2} \cdot W_{3s2} = 234.55 \text{ tonf}$$

$$OpRStr1_{VI_6at} := OpRFStr1_{VI_6at} \cdot W_{6at} = 272.35 \text{ tonf}$$

$$OpRStr1_{VI_3as} := OpRFStr1_{VI_3as} \cdot W_{3as} = 158.66 \text{ tonf}$$

$$OpRStr1_{VI_4as} := OpRFStr1_{VI_4as} \cdot W_{4as} = 166.9 \text{ tonf}$$

$$OpRStr1_{VI_5as} := OpRFStr1_{VI_5as} \cdot W_{5as} = 207.05 \text{ tonf}$$

$$InvRStr1_{VI_h20} := InvRFStr1_{VI_h20} \cdot W_{h20} = 114.67 \text{ tonf}$$

$$OpRStr1_{VI_h20} := OpRFStr1_{VI_h20} \cdot W_{h20} = 148.65 \text{ tonf}$$

$$InvRStr1_{VI} := min\langle InvRStr1_{VI_hl93}, InvRStr1_{VI_h20} \rangle$$

$$OpRStr1_{VI} := min\langle OpRStr1_{VI_hl93}, OpRStr1_{VI_3s2}, OpRStr1_{VI_6at}, OpRStr1_{VI_3as}, OpRStr1_{VI_4as}, OpRStr1_{VI_5as}, OpRStr1_{VI_h20} \rangle$$

$$InvRStr1_{VI} = 114.67 \text{ tonf}$$

$$OpRStr1_{VI} = 148.65 \text{ tonf}$$

CALDERWOOD ENGINEERING
222 RIVER ROAD
RICHMOND, ME 04357
PH. (207) 737-2007 FAX (207) 737-2008

Rating Factors, Shear Exterior Strength 1:

$$InvRFStr1_{VE_hl93} := \frac{C_v - Dv_{ext}}{\gamma_{INVSTR1} \cdot \langle Ve_{hs20} + Ve_{lane} \rangle} = 2.63$$

$$OpRFStr1_{VE_hl93} := \frac{C_v - Dv_{ext}}{\gamma_{OPSTR1} \cdot \langle Ve_{hs20} + Ve_{lane} \rangle} = 3.41$$

$$OpRFStr1_{VE_3s2} := \frac{C_v - Dv_{ext}}{\gamma_{OPSTR1} \cdot \langle Ve_{3s2} \rangle} = 5.38$$

$$OpRFStr1_{VE_6at} := \frac{C_v - Dv_{ext}}{\gamma_{OPSTR1} \cdot \langle Ve_{6at} \rangle} = 3.41$$

$$OpRFStr1_{VE_3as} := \frac{C_v - Dv_{ext}}{\gamma_{OPSTR1} \cdot \langle Ve_{3as} \rangle} = 4.37$$

$$OpRFStr1_{VE_4as} := \frac{C_v - Dv_{ext}}{\gamma_{OPSTR1} \cdot \langle Ve_{4as} \rangle} = 3.99$$

$$OpRFStr1_{VE_5as} := \frac{C_v - Dv_{ext}}{\gamma_{OPSTR1} \cdot \langle Ve_{5as} \rangle} = 4.5$$

$$InvRFStr1_{VE_h20} := \frac{C_v - Dv_{ext}}{\gamma_{INVSTR1} \cdot \langle Ve_{h20} \rangle} = 4.73$$

$$OpRFStr1_{VE_h20} := \frac{C_v - Dv_{ext}}{\gamma_{OPSTR1} \cdot Ve_{h20}} = 6.14$$

Shear Exterior Rating:

$$InvRStr1_{VE_hl93} := InvRFStr1_{VE_hl93} \cdot W_{hs20} = 94.8 \text{ tonf}$$

$$OpRStr1_{VE_hl93} := OpRFStr1_{VE_hl93} \cdot W_{hs20} = 122.89 \text{ tonf}$$

$$OpRStr1_{VE_3s2} := OpRFStr1_{VE_3s2} \cdot W_{3s2} = 193.61 \text{ tonf}$$

$$OpRStr1_{VE_6at} := OpRFStr1_{VE_6at} \cdot W_{6at} = 224.81 \text{ tonf}$$

$$OpRStr1_{VE_3as} := OpRFStr1_{VE_3as} \cdot W_{3as} = 130.97 \text{ tonf}$$

$$OpRStr1_{VE_4as} := OpRFStr1_{VE_4as} \cdot W_{4as} = 137.76 \text{ tonf}$$

$$OpRStr1_{VE_5as} := OpRFStr1_{VE_5as} \cdot W_{5as} = 170.91 \text{ tonf}$$

$$InvRStr1_{VE_h20} := InvRFStr1_{VE_h20} \cdot W_{h20} = 94.66 \text{ tonf}$$

$$OpRStr1_{VE_h20} := OpRFStr1_{VE_h20} \cdot W_{h20} = 122.7 \text{ tonf}$$

$$InvRStr1_{VE} := min\langle InvRStr1_{VE_hl93}, InvRStr1_{VE_h20} \rangle$$

$$OpRStr1_{VE} := min\langle OpRStr1_{VE_hl93}, OpRStr1_{VE_3s2}, OpRStr1_{VE_6at}, OpRStr1_{VE_3as}, OpRStr1_{VE_4as}, OpRStr1_{VE_5as}, OpRStr1_{VE_h20} \rangle$$

$$InvRStr1_{VE} = 94.66 \text{ tonf}$$

$$OpRStr1_{VE} = 122.7 \text{ tonf}$$

CALDERWOOD ENGINEERING
222 RIVER ROAD
RICHMOND, ME 04357
PH. (207) 737-2007 FAX (207) 737-2008

SERVICE 3

Capacity for Service 3:

$f_{S3allow} := 0.232\ ksi$ $\quad C_{S3} := f_{S3allow} = 0.23\ ksi$

$S := 2565\ in^3$ $\quad P_{pe} := 807.79\ kip$

$A_g := 855\ in^2$

$e := 4.318\ in$

Strength 1: Table 6A.4.2.2-1- Load Factors

Prestressed Concrete Strength 1 Dead Load (DC) $\quad \gamma_{DCServ3} := 1.00$

Prestressed Concrete Strength 1 Dead Load (DW) $\quad \gamma_{DWServ3} := 1.00$

Prestressed Concrete Strength 1 Design Inventory Live Load $\quad \gamma_{INVServ3} := 0.80$

Moment Capacity $\quad C_{S3} := f_{S3allow} = 0.23\ ksi$

Factored Dead Load $\quad DS3_{int} := \gamma_{DCServ3} \cdot \langle M_g + M_{bint} \rangle + \gamma_{DWServ3} \cdot \langle M_{ws} \rangle = 257.68\ ft{\cdot}kip$

$DS3_{ext} := \gamma_{DCServ3} \cdot \langle M_g + M_{bext} \rangle + \gamma_{DWServ3} \cdot \langle M_{ws} \rangle = 284.12\ ft{\cdot}kip$

CALDERWOOD ENGINEERING
222 RIVER ROAD
RICHMOND, ME 04357
PH. (207) 737-2007 FAX (207) 737-2008

Rating Factors, Moment Interior Service 3:

$$InvRFS3_{MI_hl93} := \frac{C_{S3} - \left(\frac{DS3_{int}}{S}\right) + \left(\frac{P_{pe}}{A_g} + \frac{P_{pe} \cdot e}{S}\right)}{\gamma_{INVServ3} \cdot \frac{\langle Mi_{hs20} + Mi_{lane} \rangle}{S}} = 1.38$$

$$InvRFS3_{MI_h20} := \frac{C_{S3} - \left(\frac{DS3_{int}}{S}\right) + \left(\frac{P_{pe}}{A_g} + \frac{P_{pe} \cdot e}{S}\right)}{\gamma_{INVServ3} \cdot \frac{\langle Mi_{h20} \rangle}{S}} = 2.28$$

Service 3 Moment Interior Rating:

$$InvRS3_{MI_hl93} := InvRFS3_{MI_hl93} \cdot W_{hs20} = 49.7 \text{ tonf}$$

$$InvRS3_{MI_h20} := InvRFS3_{MI_h20} \cdot W_{h20} = 45.62 \text{ tonf}$$

$$InvRS3_{MI} := min\left(InvRS3_{MI_hl93}, InvRS3_{MI_h20}\right)$$

$$InvRS3_{MI} = 45.62 \text{ tonf}$$

CALDERWOOD ENGINEERING
222 RIVER ROAD
RICHMOND, ME 04357
PH. (207) 737-2007 FAX (207) 737-2008

Rating Factors, Service 3 Moment Exterior Beam Rating:

$$InvRFS3_{ME_hl93} := \frac{C_{S3} - \left(\frac{DS3_{ext}}{S}\right) + \left(\frac{P_{pe}}{A_g} + \frac{P_{pe} \cdot e}{S}\right)}{\gamma_{INVServ3} \cdot \frac{\langle Me_{hs20} + Me_{lane} \rangle}{S}} = 1.14$$

$$InvRFS3_{ME_h20} := \frac{C_{S3} - \left(\frac{DS3_{ext}}{S}\right) + \left(\frac{P_{pe}}{A_g} + \frac{P_{pe} \cdot e}{S}\right)}{\gamma_{INVServ3} \cdot \frac{\langle Me_{h20} \rangle}{S}} = 1.88$$

Service 3 Moment Exterior Beam Rating:

$$InvRFS3_{ME_hl93} := InvRFS3_{ME_hl93} \cdot W_{hs20} = 40.91 \text{ tonf}$$

$$InvRS3_{ME_h20} := InvRFS3_{ME_h20} \cdot W_{h20} = 37.55 \text{ tonf}$$

$$InvRS3_{ME} := min\left\langle InvRFS3_{ME_hl93}, InvRS3_{ME_h20} \right\rangle$$

$$InvRS3_{ME} = 37.55 \text{ tonf}$$