Item Number	link	Description	1011 Roadway 91S	2011 Roadway 91N	3011 Roadway RT 5	1211 Bridge 43S	2211 Bridge 43N	1031 Training	1051 Erosion	1999 Full CE	Total Quantity	Final QTY - 60% Plans	Unit	Roll-Up into Temp. Traffic Control or Smart Work Zone	Calc. by	Date	Check by	Date
201.10	201.10	CLEARING AND GRUBBING, INCLUDING INDIVIDUAL TREES AND STUMPS	1	--	--	--	--	--	--	--	1	1	LS		WDL	11/3/2014	JDG	11/4/2014
203.15	203.15	COMMON EXCAVATION	550	600	1410	--	--	--	--	--	2560	2560	CY		preliminary	__	__	__
203.16	203.16	SOLID ROCK EXCAVATION	--	--	240	--	--	--	--	--	240	240	CY		preliminary	__	__	__
203.28	203.28	EXCAVATION OF SURFACES AND PAVEMENTS	300	--	--	--	--	--	--	--	300	300	CY		KRF	7/1/2014	WDL	7/2/14, 11/6/
203.31	203.31	SAND BORROW	--	--	70	--	--	--	--	--	70	70	CY		preliminary	__	__	__
203.32	203.32	GRANULAR BORROW	710	630	430	--	--	--	--	--	1770	1770	CY		preliminary	__	__	__
204.20	204.20	TRENCH EXCAVATION OF EARTH	--	25	--	--	--	--	--	--	25	25	CY		preliminary	__	__	__
204.21	204.21	TRENCH EXCAVATION OF ROCK	10	12	--	--	--	--	--	--	22	22	CY		preliminary	__	__	__
204.22	204.22	TRENCH EXCAVATION OF EARTH, EXPLORATORY (N.A.B.I.)	1	--	--	--	--	--	--	--	1	1	CY		WDL	5/6/2014	WDL	11/7/2014
204.25a	204.25a	STRUCTURE EXCAVATION (ABUTMENTS #1- #3)	--	--	--	1517.7	433.6	--	--	--	1951.3	2750	CY		GML	11/13/2014	__	__
204.25b	204.25b	STRUCTURE EXCAVATION (ABUTMENT #4)	--	--	--	--	731.2	--	--	--	731.2		CY		GML	11/13/2014	__	__
204.30	204.30	GRANULAR BACKFILL FOR STRUCTURES	--	15	--	1305.4	1058.7	--	--	--	2379.1	2850	CY		GML	11/13/2014	__	__
210.10	210.10	COLD PLANING, BITUMINOUS PAVEMENT	1000	800	8260	--	--	--	--	--	10060	10750	SY		preliminary	__	JTS	12/10/2014
213.10	213.10	MILLED RUMBLE STRIPS	190	700	--	--	--	--	--	--	890	890	LF		JTS/WDL	6/14	JTS	12/10/2014
301.35	301.35	SUBBASE OF DENSE GRADED CRUSHED STONE	960	1050	230	--	--	--	--	--	2240	1980	CY		JTS	12/11/2014	JDG	12/12/2014
402.10	402.10	AGGREGATE SHOULDERS, IN PLACE	50	85	--	--	--	--	--	--	135	130	CY		JTS	12/11/2014	JDG	12/12/2014
404.65	404.65	EMULSIFIED ASPHALT	16	13	60	--	--	--	--	--	89	95	CWT		preliminary	__	JTS	12/10/2014
406.50	406.50	PRICE ADJUSTMENT, ASPHALT CEMENT (N.A.B.I.)	--	--	--	--	--	--	--	1	1	1	LU		WDL	11/3/2014	JDG	11/4/2014
490.30	490.30	SUPERPAVE BITUMINOUS CONCRETE PAVEMENT	820	670	1000	--	--	--	--	--	2490	2745	TON		JTS	12/10/2014	JDG	12/12/2014
490.31	490.31	AIR VOIDS PAY ADJUSTMENT (N.A.B.I.)	--	--	--	--	--	--	--	1	1	1	LU		WDL	11/3/2014	JDG	11/4/2014
490.32	490.32	MAT DENSITY PAY ADJUSTMENT (N.A.B.I.)	--	--	--	--	--	--	--	1	1	1	LU		WDL	11/3/2014	JDG	11/4/2014
501.33	501.33	CONCRETE, HIGH PERFORMANCE CLASS A	--	--	--	193	177	--	--	--	370	366	CY		WDL	11/5/2014	JDG	11/5/2014
501.34	501.34	CONCRETE, HIGH PERFORMANCE CLASS B	--	--	--	800	695	--	--	--	1495	1485	CY		JTS/GML	10/31/2014	JDG/WDL	11/7/2014
506.50a	506.50a	STRUCTURAL STEEL, ROLLED BEAM (W30x90 DIAPHRAGM)	--	--	--	--	34682	--	--	--	34682	34933	LB		RMK/GML	June 2014	WDL	11/3/2014
506.50b	506.50b	STRUCTURAL STEEL, ROLLED BEAM (W40x149 DIAPHRAGM)	--	--	--	45832	--	--	--	--	45832	46242	LB		RMK	6/23/2014	WDL	11/3/2014
506.55	506.55	STRUCTURAL STEEL, PLATE GIRDER	--	--	--	229060	139240	--	--	--	368300	371514	LB		RMK/GML	June 2014	WDL	11/3/2014
507.11	507.11	REINFORCING STEEL, LEVEL I	--	--	--	73436	60744	--	--	--	134180	148500	LB		STR5		STR5	__
507.13	507.13	REINFORCING STEEL, LEVEL III	--	--	--	63317	60310	--	--	--	123627	134480	LB		KRF	11/7/2014		
507.16	507.16	DRILLING AND GROUTING DOWELS	--	--	--	--	144	--	--	--	144	72	LF		WDL	11/3/2014	JDG	11/6/2014
507.19	507.19	MECHANICAL BAR CONNECTOR	--	--	--	100	100	--	--	--	200	--	EACH		JTS	12/8/2014	KRF	12/9/2014
508.15a	508.15a	SHEAR CONNECTORS (2634 EA. - 7/8" X 7")(BRIDGE 43S)	--	--	--	1	--	--	--	--	1	2	LS		RMK/WDL	JUL 2014	WDL	11/4/2014
508.15b	508.15b	SHEAR CONNECTORS (3072 EA. - 7/8" X 7")(BRIDGE 43N)	--	--	--	--	1	--	--	--	1		LS		RMK/WDL	JUL 2014	WDL	11/4/2014
509.10	509.10	LONGITUDINAL DECK GROOVING	--	--	--	686	656	--	--	--	1342	1362	SY		WDL	11/4/2014	JDG	11/6/2014
514.10	514.10	WATER REPELLENT, SILANE	--	--	--	96	99	--	--	--	195	195	GAL		preliminary	__	__	__
516.10	516.10	BRIDGE EXPANSION JOINT, ASPHALTIC PLUG	--	--	--	100	95	--	--	--	195	192	LF		WDL	11/4/2014	JDG	11/5/2014
524.11	524.11	JOINT SEALER, HOT POURED	--	--	--	100	95	--	--	--	195	192	LF		WDL	11/4/2014	JDG	11/5/2014
525.70	525.70	BRIDGE RAILING, CONCRETE F-SHAPE	--	--	--	277	277	--	--	--	554	548	LF		WDL	11/4/2014	JDG	11/4/2014
529.20a	529.20a	PARTIAL REMOVAL OF STRUCTURE (SUBSTRUCTURE 43N)	--	--	--	--	1	--	--	--	1	1	EACH		WDL	11/4/2014	JDG	11/5/2014
529.20b	529.20b	PARTIAL REMOVAL OF STRUCTURE (SUBSTRUCTURE 43S)	--	--	--	1	--	--	--	--	1	1	EACH		WDL	11/4/2014	JDG	11/5/2014
529.20c	529.20c	PARTIAL REMOVAL OF STRUCTURE (SUPERSTRUCTURE 43N)	--	--	--	--	1	--	--	--	1	1	EACH		WDL	11/4/2014	JDG	11/5/2014
529.20d	529.20d	PARTIAL REMOVAL OF STRUCTURE (SUPERSTRUCTURE 43S)	--	--	--	1	--	--	--	--	1	1	EACH		WDL	11/4/2014	JDG	11/5/2014
531.18	531.18	BEARING DEVICE ASSEMBLY, ELASTOMERIC PAD W/ EXT. LOAD PLATES	--	--	--	12	12	--	--	--	24	24	EACH		RMK	6/26/2014	WDL	11/4/2014
541.30	541.30	CONCRETE, CLASS C	--	--	--	--	50	--	--	--	50	45	CY		JDG	12/10/2014	WDL	12/11/2014
		BEGIN OPTION AA																
601.0015a	601.0015a	18" CSP .064 (2-2/3 X 1/2)	--	30	--	--	--	--	--	--	30	30	LF		WDL	5/15/2014	JTS	6/23/14, 12/
601.0215b	601.0215b	18" CAAP .060 (2-2/3 X 1/2)	--	30	--	--	--	--	--	--	30		LF		WDL	5/15/2014	JTS	6/23/14, 12/
601.0416c	601.0416c	18" PCCSP .079 (2-2/3 X 1/2)	--	30	--	--	--	--	--	--	30		LF		WDL	5/15/2014	JTS	6/23/14, 12/
601.0815d	601.0815d	18" RCP CLASS III	--	30	--	--	--	--	--	--	30		LF		WDL	5/15/2014	JTS	6/23/14, 12/
601.0915e	601.0915e	18" CPEP	--	30	--	--	--	--	--	--	30		LF		WDL	5/15/2014	JTS	6/23/14, 12/
601.2815f	601.2815f	18" CPPP (SL)	--	30	--	--	--	--	--	--	30		LF		WDL	5/15/2014	JTS	6/23/14, 12/
		END OPTION AA																
604.18	604.18	PRECAST REINFORCED CONCRETE DROP INLET WITH CAST IRON GRATE	--	1	--	--	--	--	--	--	1	1	EACH		WDL	5/12/2014	JTS, WDL	6/23/14, 11/
604.40	604.40	CHANGING ELEVATION OF DROP INLETS, CATCH BASINS, OR MANHOLES	1	--	1	--	--	--	--	--	2	2	EACH		WDL	11/7/2014	JDG	11/8/2014
604.55	604.55	CAST IRON COVER WITH FRAME	--	--	1	--	--	--	--	--	1	1	EACH		WDL	11/7/2014	JDG	12/10/2014
609.10	609.10	DUST CONTROL WITH WATER	--	--	--	--	--	--	280	--	280	280	MGAL		JTS	6/26/2014	WDL	7/1/14 11/6/
609.15	609.15	DUST AND ICE CONTROL WITH CALCIUM CHLORIDE	--	--	--	--	--	--	2	--	2	2	TON		JTS	6/26/2014	WDL	7/1/14 11/6/
613.11	613.11	STONE FILL, TYPE II	90	2	--	--	--	--	--	--	92	92	CY		preliminary	__	JTS	12/12/2014
616.20	616.20	GRANITE SLOPE EDGING	--	--	648	--	--	--	--	--	648	645	LF		JTS	12/11/2014	WDL	12/11/2014
616.21	616.21	VERTICAL GRANITE CURB	--	--	362	--	--	--	--	--	362	375	LF		JTS	12/11/2014	WDL	12/11/2014
616.305	616.305	BITUMINOUS CONCRETE CURB, TYPE A	58	48	--	--	--	--	--	--	106	93	LF		JTS	12/10/2014	WDL	12/11/2014
619.16	619.16	STEEL MARKER POSTS	4	2	5	--	--	--	--	--	11	15	EACH		JTS/WDL	6/14	JTS	12/12/2014
620.50	620.50	REMOVING AND RESETTING FENCE	--	--	100	--	--	--	--	--	90	90	LF		KRF/WDL	7/9/2014	WDL	12/11/2014
621.20	621.20	STEEL BEAM GUARDRAIL, GALVANIZED	389.5	564.5	--	--	--	--	--	--	954	1012	LF		JTS	12/10/2014	JDG	12/10/2014
621.205	621.205	STEEL BEAM GUARDRAIL, GALVANIZED W/2.4 M (8 FEET) POSTS	--	58	--	--	--	--	--	--	58	--	LF		JTS	12/10/2014	JDG	12/10/2014
621.50	621.50	MANUFACTURED TERMINAL SECTION, FLARED	--	1	--	--	--	--	--	--	1	2	EACH		JTS	12/10/2014	JDG	12/10/2014
621.60	621.60	ANCHOR FOR STEEL BEAM RAIL	1	5	--	--	--	--	--	--	6	6	EACH		JTS	12/10/2014	JDG	12/10/2014
621.747	621.747	GUARDRAIL APPROACH SECTION TO CONCRETE BRIDGE RAILING, TL-3	4	4	--	--	--	--	--	--	8	8	EACH		WDL	11/5/2014	JTS	12/10/2014
621.75	621.75	REMOVE AND RESET GUARDRAIL	100	75	--	--	--	--	--	--	175	125	LF		JTS	12/10/2014	JDG	12/10/2014
621.80	621.80	REMOVAL AND DISPOSAL OF GUARDRAIL	375	650	300	--	--	--	--	--	1325	1475	LF		JDG	12/10/2014	JTS	12/12/2014
621.90	621.90	TEMPORARY TRAFFIC BARRIER	--	1310	1600	--	--	--	--	--	2910		LF		JTS	12/5/2014	WDL	12/11/2014
621.95	621.95	REMOVE AND RESET TEMPORARY TRAFFIC BARRIER	810	--	--	--	--	--	--	--	810		LF		JTS	12/5/2014	WDL	12/11/2014
~~630.10~~	~~630.10~~	~~UNIFORMED TRAFFIC OFFICERS~~	ITEM NUMBER CHANGED TO 900.615 Special Provision								--		~~DL~~		--	--	--	--
630.15	630.15	FLAGGERS	2250	2250	--	--	--	--	--	--	4500		HR		JTS	12/11/2014	KMH	12/11/2014
631.10	631.10	FIELD OFFICE, ENGINEERS	--	--	--	--	--	--	--	1	1	1	LS		WDL	11/3/2014	JDG	11/4/2014
631.16	631.16	TESTING EQUIPMENT, CONCRETE	--	--	--	--	--	--	--	1	1	1	LS		WDL	11/3/2014	JDG	11/4/2014
631.17	631.17	TESTING EQUIPMENT, BITUMINOUS	--	--	--	--	--	--	--	1	1	1	LS		WDL	11/3/2014	JDG	11/4/2014

631.26	631.26	FIELD OFFICE TELEPHONE (N.A.B.I.)	--	--	--	--	--	--	--	5000	5000	5000	DL		WDL	11/7/2014	WDL	11/7/2014
634.10	634.10	EMPLOYEE TRAINEESHIP	--	--	--	--	--	1040	--	--	1040	1040	HR		preliminary	__	__	__
635.11	635.11	MOBILIZATION/DEMOBILIZATION	--	--	--	--	--	--	--	1	1	1	LS		WDL	11/3/2014	JDG	11/4/2014
641.10a	641.10a	TRAFFIC CONTROL (I-91 NORTHBOUND)	--	1	--	--	--	--	--	--	1		LS		WDL	11/3/2014	JDG	11/4/2014
641.10b	641.10b	TRAFFIC CONTROL (I-91 SOUTHBOUND)	1	--	--	--	--	--	--	--	1	1	LS		WDL	11/3/2014	JDG	11/4/2014
641.10c	641.10c	TRAFFIC CONTROL (US RT 5)	--	--	1	--	--	--	--	--	1		LS		WDL	11/3/2014	JDG	11/4/2014
641.15	641.15	PORTABLE CHANGEABLE MESSAGE SIGN	2	2	2	--	--	--	--	--	6		EACH		preliminary	__	JTS	12/12/2014
646.404	646.404	DURABLE 4 INCH WHITE LINE, POLYUREA	--	--	3750	--	--	--	--	--	3750	3050	LF		JTS	12/11/2014	JDG	12/12/2014
646.414	646.414	DURABLE 4 INCH YELLOW LINE, POLYUREA	--	--	4040	--	--	--	--	--	4040	1040	LF		JTS	12/11/2014	JDG	12/12/2014
646.426	646.426	DURABLE 6 INCH WHITE LINE, RECESSED POLYUREA	861	654	--	--	--	--	--	--	1515	1525	LF		JTS	12/10/2014	JDG	12/12/2014
646.436	646.436	DURABLE 6 INCH YELLOW LINE, RECESSED POLYUREA	550	528	--	--	--	--	--	--	1078	1075	LF		JTS	12/10/2014	__	__
646.444	646.444	DURABLE 8 INCH WHITE LINE, POLYUREA	--	--	835	--	--	--	--	--	835	570	LF		JTS	12/10/2014	JDG	12/12/2014
646.454	646.454	DURABLE 8 INCH YELLOW LINE, POLYUREA	--	--	500	--	--	--	--	--	500	800	LF		JTS	12/10/2014	JDG	12/12/2014
646.466	646.466	DURABLE 12 INCH WHITE LINE, RECESSED POLYUREA	50	--	--	--	--	--	--	--	50		LF		JTS	12/10/2014	JDG	12/12/2014
646.484	646.484	DURABLE 24 INCH STOP BAR, POLYUREA	--	--	60	--	--	--	--	--	60	60	LF		JTS	12/10/2014	JDG	12/12/2014
646.494	646.494	DURABLE LETTER OR SYMBOL, POLYUREA	--	--	49	--	--	--	--	--	49	48	EACH		JTS	12/12/2014	JDG	12/12/2014
649.11	649.11	GEOTEXTILE FOR ROADBED SEPARATOR	825	800	--	--	--	--	--	--	1625	1625	SY		preliminary	__	__	__
649.31	649.31	GEOTEXTILE UNDER STONE FILL	180	3	--	--	--	--	--	--	183	68	SY		JTS	12/12/2014	JDG	12/12/2014
649.51	649.51	GEOTEXTILE FOR SILT FENCE	--	--	--	--	--	--	1600	--	1600	1600	SY		JTS	6/26/2014	WDL	7/1/14 11/6/
651.15	651.15	SEED	--	--	--	--	--	--	105	--	105	105	LB		JTS	6/26/2014	WDL	7/1/14 11/6/
651.18	651.18	FERTILIZER	--	--	--	--	--	--	860	--	860	860	LB		JTS	6/26/2014	WDL	7/1/14 11/6/
651.20	651.20	AGRICULTURAL LIMESTONE	--	--	--	--	--	--	4	--	4	4	TON		JTS	6/26/2014	WDL	7/1/14 11/6/
651.25	651.25	HAY MULCH	--	--	--	--	--	--	4	--	4	4	TON		JTS	6/26/2014	WDL	7/1/14 11/6/
651.35	651.35	TOPSOIL	--	--	--	--	--	--	930	--	930	930	CY		JTS	6/26/2014	WDL	7/1/14 11/6/
652.10	652.10	EPSC PLAN	--	--	--	--	--	--	1	--	1	1	LS		JTS	6/26/2014	WDL	7/1/14 11/6/
652.20	652.20	MONITORING EPSC PLAN	--	--	--	--	--	--	200	--	200	200	HR		JTS	6/26/2014	WDL	7/1/14 11/6/
652.30	652.30	MAINTENANCE OF EPSC PLAN (N.A.B.I.)	--	--	--	--	--	--	1	--	1	1	LU		JTS	6/26/2014	WDL	7/1/14 11/6/
653.20	653.20	TEMPORARY EROSION MATTING	--	--	--	--	--	--	1425	--	1425	1600	SY		JTS	6/26/2014	WDL	7/1/14 11/6/
653.25	653.25	TEMPORARY STONE CHECK DAM, TYPE I	--	--	--	--	--	--	20	--	20	20	CY		JTS	6/26/2014	WDL	7/1/14 11/6/
653.35	653.35	VEHICLE TRACKING PAD	--	--	--	--	--	--	200	--	200	200	CY		JTS	6/26/2014	WDL	7/1/14 11/6/
653.40	653.40	INLET PROTECTION DEVICE, TYPE I	--	--	--	--	--	--	11	--	11	11	EACH		JTS	6/26/2014	WDL	7/1/14 11/6/
653.50	653.50	BARRIER FENCE	--	--	--	--	--	--	3925	--	3925	3925	LF		JTS	6/26/2014	WDL	7/1/14 11/6/
675.20	675.20	TRAFFIC SIGNS, TYPE A	4.66	4.66	68.63	--	--	--	--	--	77.95	77.95	SF		JTS/WDL	6/14	JTS	12/10/2014
675.341	675.341	SQUARE TUBE SIGN POST AND ANCHOR	24	24	135	--	--	--	--	--	183	183	LF		JTS/WDL	6/14	JTS	12/11/2014
675.50	675.50	REMOVING SIGNS	6	2	26	--	--	--	--	--	34	43	EACH		WDL	11/6/2014	JDG	12/9/2014
675.60	675.60	ERECTING SALVAGED SIGNS	--	--	8	--	--	--	--	--	8	8	EACH		JDG	12/10/2014	JTS	12/11/2014
676.10a	676.10a	DELINEATOR WITH STEEL POST (BLUE)	--	2	--	--	--	--	--	--	2	3	EACH		JTS/WDL	6/14	JTS	12/10/2014
676.10b	676.10b	DELINEATOR WITH STEEL POST (GREEN)	1	1	0	--	--	--	--	--	2	1	EACH		JTS/WDL	6/14	JTS	12/10/2014
676.10c	676.10c	DELINEATOR WITH STEEL POST (YELLOW)	2	2	--	--	--	--	--	--	4	4	EACH		JTS/WDL	6/14	JTS	12/10/2014
676.12	676.12	REMOVAL OF EXISTING DELINEATOR	2	3	6	--	--	--	--	--	11	4	EACH		WDL	11/6/2014	JDG	12/8/2014
677.25	677.25	REMOVE AND RESET OVERHEAD TRAFFIC SIGN SUPPORT	--	--	1	--	--	--	--	--	1	1	EACH		WDL	11/7/2014	WDL	11/7/2014
678.40	678.40	TEMPORARY TRAFFIC SIGNAL SYSTEM	--	--	2	--	--	--	--	--	2	2	EACH		WDL	11/7/2014	WDL	11/7/2014
679.25	679.25	REMOVING AND RESETTING LIGHT POLE	--	--	1	--	--	--	--	--	1	1	EACH		WDL	11/7/2014	WDL	11/7/2014
690.50	690.50	PRICE ADJUSTMENT, FUEL (N.A.B.I.)	--	--	--	--	--	--	--	1	1	1	LU		WDL	11/3/2014	JDG	11/4/2014
900.608	900.608	SPECIAL PROVISION (HIGH PERFORMANCE CONCRETE, RAPID SET)(FPQ)	--	--	--	2	2	--	--	--	4	4	CY		RMK/WDL	JUL 2014	WDL	11/4/2014
900.615a	900.615a	SPECIAL PROVISION (PEDESTRIAN SHUTTLE)(N.A.B.I)	--	--	7500	--	--	--	--	--	7500	--	DL		WDL	11/3/2014	JDG	11/4/2014
900.615b	900.615b	SPECIAL PROVISION (UNIFORMED TRAFFIC OFFICERS)	110000	110000	--	--	--	--	--	--	220000	--	DL		KMH	12/11/2014	KMH	12/11/2014
900.620a	900.620a	SPECIAL PROVISION (GPS TIME CLOCK)	--	--	1	--	--	--	--	--	1	1	EACH		WDL	11/7/2014	WDL	11/7/2014
900.620b	900.620b	SPECIAL PROVISION (CPM SCHEDULE)	--	--	--	--	--	--	--	8	8	8	EACH		WDL	11/26/2014	KMH	12/9/2014
900.620c	900.620c	SPECIAL PROVISION (TEMPORARY SUPPORTS AND HORIZONTAL SLIDE)	--	--	--	1	1	--	--	--	2	2	EACH		WDL	11/7/2014	WDL	11/7/2014
900.630a	900.630a	SPECIAL PROVISION (UNEXPECTED OBSTRUCTION DRILLING)	--	--	--	20	20	--	--	--	40	--	HR		WDL	12/9/2014	KMH	12/9/2014
900.630b	900.630b	SPECIAL PROVISION (JET DRYER)	5	5	--	--	--	--	--	--	10	--	HR		KMH	12/11/2014	WDL	12/11/2014
900.635	900.635	SPECIAL PROVISION (STRUCTURAL STEEL, PLATE GIRDER, GRADE HPS 70W)	--	--	--	--	88470	--	--	--	88470	88470	LB		RMK/WDL	June 2014	WDL	11/3/2014
900.640a	900.640a	SPECIAL PROVISION (MICROPILE, CASED)(9.625")	--	--	--	960	450	--	--	--	1410	--	LF		GML	11/25/2014	WDL	12/5/2014
900.640b	900.640b	SPECIAL PROVISION (MICROPILE, UNCASED)(8.535")	--	--	--	235	95	--	--	--	330	--	LF		GML	11/25/2014	WDL	12/5/2014
900.645a	900.645a	SPECIAL PROVISION (CONTRACTOR-FABRICATED PRECAST CONCRETE STRUCTURE)(APPROACH SLAB #1)	--	--	--	1	--	--	--	--	1		LS		WDL	11/3/2014	JDG	11/4/2014
900.645b	900.645b	SPECIAL PROVISION (CONTRACTOR-FABRICATED PRECAST CONCRETE STRUCTURE)(APPROACH SLAB #2)	--	--	--	1	--	--	--	--	1	1	LS		WDL	11/3/2014	JDG	11/4/2014
900.645c	900.645c	SPECIAL PROVISION (CONTRACTOR-FABRICATED PRECAST CONCRETE STRUCTURE)(APPROACH SLAB #3)	--	--	--	--	1	--	--	--	1		LS		WDL	11/3/2014	JDG	11/4/2014
900.645d	900.645d	SPECIAL PROVISION (CONTRACTOR-FABRICATED PRECAST CONCRETE STRUCTURE)(APPROACH SLAB #4)	--	--	--	--	1	--	--	--	1		LS		WDL	11/3/2014	JDG	11/4/2014
900.645e	900.645e	SPECIAL PROVISION (CPM SCHEDULE)(BRIDGE 43N)	--	--	--	--	1	--	--	--	1	1	LS		WDL	11/3/2014	JDG	11/4/2014
900.645f	900.645f	SPECIAL PROVISION (CPM SCHEDULE)(BRIDGE 43S)	--	--	--	1	--	--	--	--	1	1	LS		WDL	11/3/2014	JDG	11/4/2014
900.645g	900.645g	SPECIAL PROVISION (FURNISHING EQUIPMENT FOR INSTALLING MICROPILES)	--	--	--	1	--	--	--	--	1	--	LS		WDL	11/3/2014	WDL	12/10/2014
900.645h	900.645h	SPECIAL PROVISION (PUBLIC PROTECTION FOR BRIDGE PROJECTS)	--	--	1	--	--	--	--	--	1	1	LS		WDL	11/3/2014	JDG	11/4/2014
900.645i	900.645i	SPECIAL PROVISION (SMART WORK ZONE)	--	--	1	--	--	--	--	--	1	1	LS		WDL	11/5/2014	WDL	12/10/2014
900.650a	900.650a	SPECIAL PROVISION (INCENTIVE/DISINCENTIVE)(N.A.B.I.)(BRIDGE 43N)	--	--	--	--	1	--	--	--	1	1	LU		WDL	11/3/2014	JDG	11/4/2014
900.650b	900.650b	SPECIAL PROVISION (INCENTIVE/DISINCENTIVE)(N.A.B.I.)(BRIDGE 43S)	--	--	--	1	--	--	--	--	1	1	LU		WDL	11/3/2014	JDG	11/4/2014
900.670	900.670	SPECIAL PROVISION (PRECAST PRESTRESSED CONCRETE DECK PANEL)(3 1/2")	--	--	--	4402	4260	--	--	--	8662	9800	SF		WDL	11/4/2014	JDG	11/4/2014

Calculated by: WDL 11/3/2014
Checked by: JDG 11/4/2014

201.10 CLEARING AND GRUBBING, INCLUDING INDIVIDUAL TREES AI Units: **LS**

1011 Roadway 91S	2011 Roadway 91N	3011 Roadway RT 5	1211 Bridge 43S	2211 Bridge 43N	1031 Training	1051 Erosion	1999 Full CE	Total Quantity
1	--	--	--	--	--	--	--	1

Per Alan Ellis, LS items can only have "1" unit. Therefore put C&G on 1st roadway for this project.

Calculated by: preliminary __
Checked by: __ __

203.15 COMMON EXCAVATION Units: **CY**

1011 Roadway 91S	2011 Roadway 91N	3011 Roadway RT 5	1211 Bridge 43S	2211 Bridge 43N	1031 Training	1051 Erosion	1999 Full CE	Total Quantity
550	600	1410	--	--	--	--	--	2560

Calculated by: preliminary __
Checked by: __ __

203.16 SOLID ROCK EXCAVATION Units: **CY**

1011 Roadway 91S	2011 Roadway 91N	3011 Roadway RT 5	1211 Bridge 43S	2211 Bridge 43N	1031 Training	1051 Erosion	1999 Full CE	Total Quantity
--	--	240	--	--	--	--	--	240

Calculated by: KRF 7/1/2014
Checked by: WDL 7/2/14, 11/6/14

203.28 EXCAVATION OF SURFACES AND PAVEMENTS Units: **CY**

1011 Roadway 91S	2011 Roadway 91N	3011 Roadway RT 5	1211 Bridge 43S	2211 Bridge 43N	1031 Training	1051 Erosion	1999 Full CE	Total Quantity
300	--	--	--	--	--	--	--	300

Quantities calculated and checked for Preliminary still stand. WDL 11/6/14

203.28 Excavation of Surfaces and Pavements SAY 300.00 CY

See level 21 s12a132qnt_roadway_US 5.dgn

Area (SF)	Thickness	Vol (CF)
12130.84	0.666667	8087.23
		8087.23 CF
		27.00 CF/CY
		299.53 CY

Calculated by: preliminary __
Checked by: __ __

203.31 SAND BORROW Units: **CY**

1011 Roadway 91S	2011 Roadway 91N	3011 Roadway RT 5	1211 Bridge 43S	2211 Bridge 43N	1031 Training	1051 Erosion	1999 Full CE	Total Quantity
--	--	70	--	--	--	--	--	70

Calculated by: preliminary __
Checked by: __ __

203.32 GRANULAR BORROW Units: **CY**

1011 Roadway 91S	2011 Roadway 91N	3011 Roadway RT 5	1211 Bridge 43S	2211 Bridge 43N	1031 Training	1051 Erosion	1999 Full CE	Total Quantity
710	630	430	--	--	--	--	--	1770

Calculated by: preliminary __
Checked by: __ __

204.20 TRENCH EXCAVATION OF EARTH Units: **CY**

1011 Roadway 91S	2011 Roadway 91N	3011 Roadway RT 5	1211 Bridge 43S	2211 Bridge 43N	1031 Training	1051 Erosion	1999 Full CE	Total Quantity
--	25	--	--	--	--	--	--	25

Calculated by: preliminary __
Checked by: __ __

204.21 TRENCH EXCAVATION OF ROCK Units: **CY**

1011 Roadway 91S	2011 Roadway 91N	3011 Roadway RT 5	1211 Bridge 43S	2211 Bridge 43N	1031 Training	1051 Erosion	1999 Full CE	Total Quantity
10	12	--	--	--	--	--	--	22

Calculated by: WDL 5/6/2014
Checked by: WDL 11/7/2014

204.22 TRENCH EXCAVATION OF EARTH, EXPLORATORY (N.A.B.I.) Units: **CY**

1011 Roadway 91S	2011 Roadway 91N	3011 Roadway RT 5	1211 Bridge 43S	2211 Bridge 43N	1031 Training	1051 Erosion	1999 Full CE	Total Quantity
1	--	--	--	--	--	--	--	1

Calculated by: GML 11/13/2014
Checked by: __ __

204.25a STRUCTURE EXCAVATION (ABUTMENTS #1- #3) Units: **CY**

1011 Roadway 91S	2011 Roadway 91N	3011 Roadway RT 5	1211 Bridge 43S	2211 Bridge 43N	1031 Training	1051 Erosion	1999 Full CE	Total Quantity
--	--	--	1517.7	433.6	--	--	--	1951.3

Calculated by: GML 11/13/2014
Checked by: __ __

204.25b STRUCTURE EXCAVATION (ABUTMENT #4) Units: **CY**

1011 Roadway 91S	2011 Roadway 91N	3011 Roadway RT 5	1211 Bridge 43S	2211 Bridge 43N	1031 Training	1051 Erosion	1999 Full CE	Total Quantity
--	--	--	--	731.2	--	--	--	731.2

Calculated by: GML 11/13/2014
Checked by: __ __

204.30 GRANULAR BACKFILL FOR STRUCTURES Units: **CY**

1011 Roadway 91S	2011 Roadway 91N	3011 Roadway RT 5	1211 Bridge 43S	2211 Bridge 43N	1031 Training	1051 Erosion	1999 Full CE	Total Quantity
--	15	--	1305.4	1058.7	--	--	--	2379.1

Calculated by: preliminary __
Checked by: JTS 12/10/2014

210.10 COLD PLANING, BITUMINOUS PAVEMENT Units: **SY**

1011 Roadway 91S	2011 Roadway 91N	3011 Roadway RT 5	1211 Bridge 43S	2211 Bridge 43N	1031 Training	1051 Erosion	1999 Full CE	Total Quantity
1000	800	8260	--	--	--	--	--	10060

Calculated by: JTS/WDL 6/14
Checked by: JTS 12/10/2014

213.10 MILLED RUMBLE STRIPS Units: **LF**

1011 Roadway 91S	2011 Roadway 91N	3011 Roadway RT 5	1211 Bridge 43S	2211 Bridge 43N	1031 Training	1051 Erosion	1999 Full CE	Total Quantity
190	700	--	--	--	--	--	--	890

Calculated by: JTS 12/11/2014
Checked by: JDG 12/12/2014

301.35 SUBBASE OF DENSE GRADED CRUSHED STONE Units: **CY**

1011 Roadway 91S	2011 Roadway 91N	3011 Roadway RT 5	1211 Bridge 43S	2211 Bridge 43N	1031 Training	1051 Erosion	1999 Full CE	Total Quantity
960	1050	230	--	--	--	--	--	2240

Calculated by: JTS 12/11/2014
Checked by: JDG 12/12/2014

402.10 AGGREGATE SHOULDERS, IN PLACE Units: **CY**

1011 Roadway 91S	2011 Roadway 91N	3011 Roadway RT 5	1211 Bridge 43S	2211 Bridge 43N	1031 Training	1051 Erosion	1999 Full CE	Total Quantity
50	85	--	--	--	--	--	--	135

Calculated by: preliminary __
Checked by: JTS 12/10/2014

404.65 EMULSIFIED ASPHALT Units: **CWT**

1011 Roadway 91S	2011 Roadway 91N	3011 Roadway RT 5	1211 Bridge 43S	2211 Bridge 43N	1031 Training	1051 Erosion	1999 Full CE	Total Quantity
16	13	60	--	--	--	--	--	89

Calculated by: WDL 11/3/2014
Checked by: JDG 11/4/2014

406.50 PRICE ADJUSTMENT, ASPHALT CEMENT (N.A.B.I.) Units: **LU**

1011 Roadway 91S	2011 Roadway 91N	3011 Roadway RT 5	1211 Bridge 43S	2211 Bridge 43N	1031 Training	1051 Erosion	1999 Full CE	Total Quantity
--	--	--	--	--	--	--	1	1

Calculated by: JTS 12/10/2014
Checked by: JDG 12/12/2014

490.30 SUPERPAVE BITUMINOUS CONCRETE PAVEMENT Units: **TON**

1011 Roadway 91S	2011 Roadway 91N	3011 Roadway RT 5	1211 Bridge 43S	2211 Bridge 43N	1031 Training	1051 Erosion	1999 Full CE	Total Quantity
820	670	1000	--	--	--	--	--	2490

Calculated by: WDL 11/3/2014
Checked by: JDG 11/4/2014

490.31 AIR VOIDS PAY ADJUSTMENT (N.A.B.I.) Units: **LU**

1011 Roadway 91S	2011 Roadway 91N	3011 Roadway RT 5	1211 Bridge 43S	2211 Bridge 43N	1031 Training	1051 Erosion	1999 Full CE	Total Quantity
--	--	--	--	--	--	--	1	1

Calculated by: WDL 11/3/2014
Checked by: JDG 11/4/2014

490.32 MAT DENSITY PAY ADJUSTMENT (N.A.B.I.) Units: **LU**

1011 Roadway 91S	2011 Roadway 91N	3011 Roadway RT 5	1211 Bridge 43S	2211 Bridge 43N	1031 Training	1051 Erosion	1999 Full CE	Total Quantity
--	--	--	--	--	--	--	1	1

Calculated by: WDL 11/5/2014
Checked by: JDG 11/5/2014

501.33 CONCRETE, HIGH PERFORMANCE CLASS A Units: **CY**

1011 Roadway 91S	2011 Roadway 91N	3011 Roadway RT 5	1211 Bridge 43S	2211 Bridge 43N	1031 Training	1051 Erosion	1999 Full CE	Total Quantity
--	--	--	193	177	--	--	--	370

FPQ - evaluate quantifying to 0.01 CY due to unit cost. WDL: ROUND TO 370 CY - ONLY 0.04

SOUTHBOUND

LEVEL 45 See s12a132qnt_bridge_superstructures.dgn

Plan area between ext. girders, backwalls, and SIP forms	1352.63	sf
Plan area of overhangs between suspended backwalls	689	sf
Interior Deck Thickness	9	in
Overhang Thickness	10	in
Plan area of SIP panels (total)	4402	sf
Cast in place depth over SIP panels	5.5	in
Suspended backwall cross sectional area	15.57	sf
Length of suspended backwall	51.66	ft
Number of suspended backwalls	2	ea

Deck Between Suspended Backwalls (including overhangs, excluding over SIP panels):
Subtotal: 58.83849 cy

Deck over SIP panels:
Subtotal: 74.72531 cy

Suspended Backwalls:
Subtotal: 59.5812 cy

Total
193.145 cy **SAY 193.14 CY**

501.33 CONCRETE, HIGH PERFORMANCE CLASS A (CONT'D)

NORTHBOUND

LEVEL 45 See s12a132qnt_bridge_superstructures.dgn

Plan area between ext. girders, backwalls, and SIP forms	1330.20	sf
Plan area of overhangs between suspended backwalls	594.55	sf
Interior Deck Thickness	9	in
Overhang Thickness	10	in
Plan area of SIP panels (total)	4260	sf
Cast in place depth over SIP panels	5.5	in
Suspended backwall cross sectional area	13.4	sf
Length of suspended backwall	49.57	ft
Number of suspended backwalls	2	ea

Deck Between Suspended Backwalls (including overhangs, excluding over SIP panels):

Subtotal: 55.30031 cy

Deck over SIP panels:

Subtotal: 72.31481 cy

Suspended Backwalls:

Subtotal: 49.20281 cy

Total

176.8179 cy **SAY 176.82 CY**

Calculated by: JTS/GML 10/31/2014
Checked by: JDG/WDL 11/7/2014

501.34 CONCRETE, HIGH PERFORMANCE CLASS B Units: **CY**

1011 Roadway 91S	2011 Roadway 91N	3011 Roadway RT 5	1211 Bridge 43S	2211 Bridge 43N	1031 Training	1051 Erosion	1999 Full CE	Total Quantity
--	--	--	800	695	--	--	--	1495

ROUNDUP YARD

SOUTHBOUND

RETAINING WALLS
s12a132-RetainingWallQTY.pdf **Subtotal: 197 CY**

ABUTMENTS
Calc'd by GML 10/31/14, checked by JDG 11/04/14
Abutment #1: 290.68 CY
Abutment #2: 290.60 CY
Subtotal: 581.28 CY

NORTHBOUND

RETAINING WALLS
s12a132-RetainingWallQTY.pdf **Subtotal: 161 CY**

ABUTMENTS
Calc'd by GML 10/31/14, checked by JDG 11/04/14, backchecked GML
Abutment #3: 252.64 CY
Abutment #4: 262.18 CY
Subtotal: 514.82 CY

Calculated by: RMK/GML June 2014
Checked by: WDL 11/3/2014
Final Check: JDG 11/4/2014

506.50a STRUCTURAL STEEL, ROLLED BEAM (W30x90 DIAPHRAGM) Units: **LB**

1011 Roadway 91S	2011 Roadway 91N	3011 Roadway RT 5	1211 Bridge 43S	2211 Bridge 43N	1031 Training	1051 Erosion	1999 Full CE	Total Quantity
--	--	--	--	34682	--	--	--	34682

Adjusted CL Bearing diaphragm length, otherwise the quantities below, calculated and checked for Preliminary still stand, WDL 11/3/2014

506.50 STRUCTURAL STEEL, ROLLED BEAM (W30x90 DIAPHRAGM)

LEVEL 47 Also, see s12a132fra43N.dgn

Calc By: RMK 6/27/2014
Check By: GML 6/30/2014

CL Bearing diaphragm length	~~7.99~~ ft	8.05
Intermediate diaphragm length ← see email for final design	8.71 ft	
Number of diaphragms at CL Bearing	10 ea	
Number of intermediate diaphragms	35 ea	
Weight per foot W30 x 90	90 plf	
Total		
~~34627.5~~ lb	SAY ~~34630~~ LB	
34681.5	34682	

Bolts (not inlcuded in weight, just for information)

Diaphragms/Bay	9
Bays	5
Ends/Diaphragm	2
Bolts/End	8
TOTAL BOLTS	**720**

Calculated by:	RMK	6/23/2014
Checked by:	WDL	11/3/2014
Final Check:	JDG	11/4/2014

506.50b STRUCTURAL STEEL, ROLLED BEAM (W40x149 DIAPHRAGM) Units: **LB**

1011 Roadway 91S	2011 Roadway 91N	3011 Roadway RT 5	1211 Bridge 43S	2211 Bridge 43N	1031 Training	1051 Erosion	1999 Full CE	Total Quantity
--	--	--	45832	--	--	--	--	45832

Adjusted CL Bearing diaphragm length, otherwise the quantities below, calculated and checked for Preliminary still stand, WDL 11/3/2014

506.50 STRUCTURAL STEEL, ROLLED BEAM (W40x149 DIAPHRAGM)

LEVEL 47 Also, see s12a132fra43S.dgn

Calc By: RMK 6/23/2014
Check By:

CL Bearing diaphragm length	~~8.20~~ ft	8.31
Intermediate diaphragm length	8.98 ft	
Number of diaphragms at CL Bearing	10 ea	
Number of intermediate diaphragms	25 ea	
Weight per foot W40 x 149	149 plf	

Total

~~45757.9~~ lb SAY ~~45760~~ LB

45832.4 45832

Bolts (not inlcuded in weight, just for information)

Diaphragms/Bay	7
Bays	5
Ends/Diaphragm	2
Bolts/End	11
TOTAL BOLTS	**770**

Calculated by: RMK/GML June 2014
Checked by: WDL 11/3/2014
Final Check: JDG 11/4/2014

506.55 STRUCTURAL STEEL, PLATE GIRDER Units: **LB**

1011 Roadway 91S	2011 Roadway 91N	3011 Roadway RT 5	1211 Bridge 43S	2211 Bridge 43N	1031 Training	1051 Erosion	1999 Full CE	Total Quantity
--	--	--	229060	139240	--	--	--	368300

Updated Preliminary Qtys to inlcude temp slide bearing stiffeners.

Southbound

506.55 STRUCTURAL STEEL, PLATE GIRDER

LEVEL 47 Also, see s12a132fra43S.dgn

Calc By: RMK 6/23/2014
Check By:

Weight of Steel	490 pcf	
Number of girders	6 ea	
Top flange thickness	1 in	
Top flange width	20 in	
Web thickness	0.625 in	
Web height	50 in	
Bottom flange thickness	1.5 in	
Bottom flange width	20 in	
Girder length (overall)	133.32 ft	133.3216
Bearing stiffener thickness	1 in	
Bearing stiffener width	9 in	
Number of bearing stiffeners	24 ea	+24 SLIDE
Connection plate thickness	0.5 in	
Connection plate width	5 in	
Number of connection plates	50 ea	

Girders:

Subtotal: 221158.44 lb

Bearing Stiffeners and Connection Plates:

Subtotal: ~~4834.7891 lb~~ 7897

Total

~~225993.2 lb~~ SAY ~~226000 LB~~

229055.7 SAY 229060

Northbound

506.55 STRUCTURAL STEEL, PLATE GIRDER

LEVEL 47 Also, see s12a132fra43N.dgn

Calc By: RMK 6/27/2014
Check By: GML 6/30/2014

Bottom flange paid for under item 900.635, Special Provision (Structural Steel, Plate Girder, Grade HPS 70W)

Weight of Steel	490 pcf	
Number of girders	6 ea	
Top flange thickness	1.25 in	
Top flange width	20 in	
Web thickness	0.625 in	
Web height	38 in	
Girder length (overall)	133.32 ft	133.3216
Bearing stiffener thickness	1 in	
Bearing stiffener width	9 in	
Number of bearing stiffeners	24 ea	+24 SLIDE
Connection plate thickness	0.5 in	
Connection plate width	5 in	
Number of connection plates	70 ea	

Girders:

Subtotal: 132695.06 lb

Bearing Stiffeners and Connection Plates:

Subtotal: ~~4213.206 lb~~ 6541

Total

~~136908.3 lb~~ SAY ~~136910 LB~~

139236 **SAY 139240 LB**

Calculated by: STR5 __
Checked by: STR5 __

507.11 REINFORCING STEEL, LEVEL I Units: **LB**

1011 Roadway 91S	2011 Roadway 91N	3011 Roadway RT 5	1211 Bridge 43S	2211 Bridge 43N	1031 Training	1051 Erosion	1999 Full CE	Total Quantity
--	--	--	73436	60744	--	--	--	134180

SOUTHBOUND

RETAINING WALLS from JS email Friday Oct 31, 2014:

507.11 REINFORCING STEEL, LEVEL I **SAY** **16850 LB**

See Reinforcing Steel Schedule 16819.24 LB

ABUTMENTS

NORTHBOUND

RETAINING WALLS from JS email Friday Oct 31, 2014:

507.11 REINFORCING STEEL, LEVEL I **SAY** **14850 LB**

See Reinforcing Steel Schedule 14834.36 LB

CALCULATED BY: GML 12-15-2014 RSS WEIGHT SUMMARY HARTFORD IM091-2(79)
CHECKED BY:

ABUTMENT 1:				
		LEVEL I	-	28,044.11
		LEVEL III	-	2,112.60
ABUTMENT 2:				
		LEVEL I	-	28,542.43
		LEVEL III	-	2,162.66
ABUTMENT 3:				
		LEVEL I	-	23,839.47
		LEVEL III	-	2,215.07
ABUTMENT 4:				
		LEVEL I	-	22,055.13
		LEVEL III	-	3,693.84

TOTAL	LEVEL I	-	102,481.14
	LEVEL III	-	10,184.17

Calculated by: KRF 11/7/2014
Checked by: __ __

507.13 REINFORCING STEEL, LEVEL III Units: **LB**

1011 Roadway 91S	2011 Roadway 91N	3011 Roadway RT 5	1211 Bridge 43S	2211 Bridge 43N	1031 Training	1051 Erosion	1999 Full CE	Total Quantity
--	--	--	63317	60310	--	--	--	123627

WHOLE #

From KVF 11/7/14:
SB = 59,042.48 lbs

NB = 54,400.58 lbs

Keith R. Friedland
Project Technician
Structures Section
VT Agency of Transportation
(802) 828-0042

CALCULATED BY: GML 12-15-2014 RSS WEIGHT SUMMARY HARTFORD IM091-2(79)
CHECKED BY:

ABUTMENT 1:				
		LEVEL I	-	28,044.11
		LEVEL III	-	2,112.60
ABUTMENT 2:				
		LEVEL I	-	28,542.43
		LEVEL III	-	2,162.66
ABUTMENT 3:				
		LEVEL I	-	23,839.47
		LEVEL III	-	2,215.07
ABUTMENT 4:				
		LEVEL I	-	22,055.13
		LEVEL III	-	3,693.84
	TOTAL	LEVEL I	-	102,481.14
		LEVEL III	-	10,184.17

Calculated by: WDL 11/3/2014
Checked by: JDG 11/6/2014

507.16 DRILLING AND GROUTING DOWELS Units: **LF**

1011 Roadway 91S	2011 Roadway 91N	3011 Roadway RT 5	1211 Bridge 43S	2211 Bridge 43N	1031 Training	1051 Erosion	1999 Full CE	Total Quantity
--	--	--	--	144	--	--	--	144

Drilling and grouting dowels from footing/subfooting 2' into bedrock at Abutment #4
From 10/31/2014 Abutment 4 Footing progress plans:
2 feet into bedrock at (34 + 38) locations: =2(34+38) 144 LF

Calculated by: JTS 12/8/2014
Checked by: KRF 12/9/2014

507.19 MECHANICAL BAR CONNECTOR Units: **EACH**

1011 Roadway 91S	2011 Roadway 91N	3011 Roadway RT 5	1211 Bridge 43S	2211 Bridge 43N	1031 Training	1051 Erosion	1999 Full CE	Total Quantity
--	--	--	100	100	--	--	--	200

Calculated by: RMK/WDL JUL 2014
Checked by: WDL 11/4/2014

508.15a SHEAR CONNECTORS (2634 EA. - 7/8" X 7")(BRIDGE 43S) Units: **LS**

1011 Roadway 91S	2011 Roadway 91N	3011 Roadway RT 5	1211 Bridge 43S	2211 Bridge 43N	1031 Training	1051 Erosion	1999 Full CE	Total Quantity
--	--	--	1	--	--	--	--	1

Quantities calculated for Preliminary still stand. WDL 11/4/14

508.15 SHEAR CONNECTORS

Calc By: RMK 6/26/2014
Check By: WDL 7/2/2014

Number of girders: 6

Number of rows: 2

Spacing: 7 in

CL Brg to CL Brg: 128 ft

Total

2634 ea SAY 1 LS (2634 - 7/8"x7")

Calculated by: RMK/WDL JUL 2014
Checked by: WDL 11/4/2014

508.15b SHEAR CONNECTORS (3072 EA. - 7/8" X 7")(BRIDGE 43N) Units: **LS**

1011 Roadway 91S	2011 Roadway 91N	3011 Roadway RT 5	1211 Bridge 43S	2211 Bridge 43N	1031 Training	1051 Erosion	1999 Full CE	Total Quantity
--	--	--	--	1	--	--	--	1

Quantities calculated for Preliminary still stand. WDL 11/4/14

508.15 SHEAR CONNECTORS

Calc By: RMK 6/27/2014
Check By: WDL 7/2/2014

Number of girders: 6

Number of rows: 2

Spacing: 6 in

CL Brg to CL Brg: 128 ft

Total

3072 ea SAY **1 LS (3072 - 7/8"x7")**

Calculated by: WDL 11/4/2014
Checked by: JDG 11/6/2014

509.10 LONGITUDINAL DECK GROOVING Units: **SY**

1011 Roadway 91S	2011 Roadway 91N	3011 Roadway RT 5	1211 Bridge 43S	2211 Bridge 43N	1031 Training	1051 Erosion	1999 Full CE	Total Quantity
--	--	--	686	656	--	--	--	1342

Southbound:

509.10 LONGITUDINAL DECK GROOVING

Calc By: WDL 11/4/2014
Check By:

LEVEL 41

6170 sf

Total

685.5556 sy **SAY** **686 SY**

Northbound

509.10 LONGITUDINAL DECK GROOVING

Calc By: WDL 11/4/2014
Check By:

LEVEL 41

5900 sf

Total

655.5556 sy **SAY** **656 SY**

TOTAL 1342 SY

Calculated by: preliminary __
Checked by: __ __

514.10 WATER REPELLENT, SILANE Units: **GAL**

1011 Roadway 91S	2011 Roadway 91N	3011 Roadway RT 5	1211 Bridge 43S	2211 Bridge 43N	1031 Training	1051 Erosion	1999 Full CE	Total Quantity
--	--	--	96	99	--	--	--	195

SOUTHBOUND
514.10 WATER REPELLENT, SILANE

Calc By: WDL ########
Check By:

SUPERSTRUCTURE SB

Applied to: deck, bridge rail (all faces), fascia, overhang to drip notch

Application rate:	14	sy per gal	
Deck area:	6170	sf	(same as deck grooving)
Length of fascia (avg):	136.12	ft	
Perimeter of f-shape (section):	8.44	ft	
Height of fascia:	10	in	
Width to drip notch:	6	in	

Total
70.1 gal **SUBTOTAL 70.1 GAL**

SUBSTRUCTURE SB

NORTHBOUND

514.10 WATER REPELLENT, SILANE

Calc By: WDL ########
Check By:

SUPERSTRUCTURE NB

Applied to: deck, bridge rail (all faces), fascia, overhang to drip notch

Application rate:	14	sy per gal	
Deck area:	5900	sf	(same as deck grooving)
Length of fascia (avg):	136.21	ft	
Perimeter of f-shape (section):	8.44	ft	
Height of fascia:	10	in	
Width to drip notch:	6	in	

Total

68.0 gal **SUBTOTAL 68.0 GAL**

SUBSTRUCTURE NB

Calculated by: WDL 11/4/2014
Checked by: JDG 11/5/2014

516.10 BRIDGE EXPANSION JOINT, ASPHALTIC PLUG Units: **LF**

1011 Roadway 91S	2011 Roadway 91N	3011 Roadway RT 5	1211 Bridge 43S	2211 Bridge 43N	1031 Training	1051 Erosion	1999 Full CE	Total Quantity
--	--	--	100	95	--	--	--	195

SOUTHBOUND

516.10 BRIDGE EXPANSION JOINT, ASPHALTIC PLUG

Calc By: WDL 11/4/2014
Check By:

LEVEL 11

Begin Approach Slab #1: 49.0 ft

End Approach Slab #2: 50.0 ft

Total

99.0 ft **SAY 100 LF**

NORTHBOUND

516.10 BRIDGE EXPANSION JOINT, ASPHALTIC PLUG

Calc By: WDL 11/4/2014
Check By:

LEVEL 11

Begin Approach Slab #3: 47.0 ft

End Approach Slab #4: 48.0 ft

Total

95.0 ft **SAY 95 LF**

Calculated by: WDL 11/4/2014
Checked by: JDG 11/5/2014

524.11 JOINT SEALER, HOT POURED Units: **LF**

1011 Roadway 91S	2011 Roadway 91N	3011 Roadway RT 5	1211 Bridge 43S	2211 Bridge 43N	1031 Training	1051 Erosion	1999 Full CE	Total Quantity
--	--	--	100	95	--	--	--	195

SOUTHBOUND

524.11 JOINT SEALER, HOT POURED

Calc By: WDL 11/4/2014
Check By:

LEVEL 11

End Approach Slab #1: 49.2 ft

Begin Approach Slab #2: 50.1 ft

Total

99.3 ft **SAY** **100 LF**

NORTHBOUND

524.11 JOINT SEALER, HOT POURED

Calc By: WDL 11/4/2014
Check By:

LEVEL 11

End Approach Slab #3: 47.0 ft

Begin Approach Slab #4: 48.0 ft

Total

95 ft **SAY** **95 LF**

Calculated by: WDL 11/4/2014
Checked by: JDG 11/4/2014

525.70 BRIDGE RAILING, CONCRETE F-SHAPE Units: **LF**

1011 Roadway 91S	2011 Roadway 91N	3011 Roadway RT 5	1211 Bridge 43S	2211 Bridge 43N	1031 Training	1051 Erosion	1999 Full CE	Total Quantity
--	--	--	277	277	--	--	--	554

SOUTHBOUND

525.70 BRIDGE RAILING, CONCRETE F-SHAPE

Calc By: WDL 11/4/2014
Check By:

LEVEL 15

LT: 138.08 ft

RT: 138.41 ft

Total

276.49 ft **SAY** **277 LF**

NORTHBOUND

525.70 BRIDGE RAILING, CONCRETE F-SHAPE

Calc By: WDL 11/4/2014
Check By:

LEVEL 15

LT: 138.18 ft

RT: 138.50 ft

Total

276.68 ft **SAY** **277 LF**

Calculated by: WDL 11/4/2014
Checked by: JDG 11/5/2014

529.20a PARTIAL REMOVAL OF STRUCTURE (SUBSTRUCTURE 43N) Units: **EACH**

1011 Roadway 91S	2011 Roadway 91N	3011 Roadway RT 5	1211 Bridge 43S	2211 Bridge 43N	1031 Training	1051 Erosion	1999 Full CE	Total Quantity
--	--	--	--	1	--	--	--	1

Calculated by: WDL 11/4/2014
Checked by: JDG 11/5/2014

529.20b PARTIAL REMOVAL OF STRUCTURE (SUBSTRUCTURE 43S) Units: **EACH**

1011 Roadway 91S	2011 Roadway 91N	3011 Roadway RT 5	1211 Bridge 43S	2211 Bridge 43N	1031 Training	1051 Erosion	1999 Full CE	Total Quantity
--	--	--	1	--	--	--	--	1

Calculated by: WDL 11/4/2014
Checked by: JDG 11/5/2014

529.20c PARTIAL REMOVAL OF STRUCTURE (SUPERSTRUCTURE 43N Units: **EACH**

1011 Roadway 91S	2011 Roadway 91N	3011 Roadway RT 5	1211 Bridge 43S	2211 Bridge 43N	1031 Training	1051 Erosion	1999 Full CE	Total Quantity
--	--	--	--	1	--	--	--	1

Calculated by: WDL 11/4/2014
Checked by: JDG 11/5/2014

529.20d PARTIAL REMOVAL OF STRUCTURE (SUPERSTRUCTURE 43S) Units: **EACH**

1011 Roadway 91S	2011 Roadway 91N	3011 Roadway RT 5	1211 Bridge 43S	2211 Bridge 43N	1031 Training	1051 Erosion	1999 Full CE	Total Quantity
--	--	--	1	--	--	--	--	1

Calculated by: RMK 6/26/2014
Checked by: WDL 11/4/2014

531.18 BEARING DEVICE ASSEMBLY, ELASTOMERIC PAD W/ EXT. LO. Units: **EACH**

1011 Roadway 91S	2011 Roadway 91N	3011 Roadway RT 5	1211 Bridge 43S	2211 Bridge 43N	1031 Training	1051 Erosion	1999 Full CE	Total Quantity
--	--	--	12	12	--	--	--	24

SOUTHBOUND

~~531.17~~ BEARING DEVICE ASSEMBLY, STEEL REINFORCED ELASTOMERIC PAD

Calc By: RMK 6/26/2014
Check By: WDL 7/2/2014

In final design, determine if the bearings should be paid under 531.18 YES

Number of girders: 6

Bearings per girder: 2 ea

Total

12 ea SAY 12 EA

NORTHBOUND

~~531.17~~ BEARING DEVICE ASSEMBLY, STEEL REINFORCED ELASTOMERIC PAD

Calc By: RMK 6/27/2014
Check By: WDL 7/2/2014

In final design, determine if the bearings should be paid under 531.18 YES

Number of girders: 6

Bearings per girder: 2 ea

Total

12 ea SAY 12 EA

Calculated by: JDG 12/10/2014
Checked by: WDL 12/11/2014

541.30 CONCRETE, CLASS C Units: **CY**

1011 Roadway 91S	2011 Roadway 91N	3011 Roadway RT 5	1211 Bridge 43S	2211 Bridge 43N	1031 Training	1051 Erosion	1999 Full CE	Total Quantity
--	--	--	--	50	--	--	--	50

Calculated by: WDL 5/15/2014
Checked by: JTS 6/23/14, 12/10/14

601.0015a 18" CSP .064 (2-2/3 X 1/2) Units: **LF**

1011 Roadway 91S	2011 Roadway 91N	3011 Roadway RT 5	1211 Bridge 43S	2211 Bridge 43N	1031 Training	1051 Erosion	1999 Full CE	Total Quantity
--	30	--	--	--	--	--	--	30

From Drainage Layout Sheet

16 - New 10" x30 Option Pipe **30 FT**

Calculated by: WDL 5/15/2014
Checked by: JTS 6/23/14, 12/10/14

601.0215b 18" CAAP .060 (2-2/3 X 1/2) Units: **LF**

1011 Roadway 91S	2011 Roadway 91N	3011 Roadway RT 5	1211 Bridge 43S	2211 Bridge 43N	1031 Training	1051 Erosion	1999 Full CE	Total Quantity
--	30	--	--	--	--	--	--	30

From Drainage Layout Sheet

16 - New 10" x30 Option Pipe **30 FT**

Calculated by: WDL 5/15/2014
Checked by: JTS 6/23/14, 12/10/14

601.0416c 18" PCCSP .079 (2-2/3 X 1/2) Units: **LF**

1011 Roadway 91S	2011 Roadway 91N	3011 Roadway RT 5	1211 Bridge 43S	2211 Bridge 43N	1031 Training	1051 Erosion	1999 Full CE	Total Quantity
--	30	--	--	--	--	--	--	30

From Drainage Layout Sheet

16 - New 10" x30 Option Pipe **30 FT**

Calculated by: WDL 5/15/2014
Checked by: JTS 6/23/14, 12/10/14

601.0815d 18" RCP CLASS III Units: **LF**

1011 Roadway 91S	2011 Roadway 91N	3011 Roadway RT 5	1211 Bridge 43S	2211 Bridge 43N	1031 Training	1051 Erosion	1999 Full CE	Total Quantity
--	30	--	--	--	--	--	--	30

From Drainage Layout Sheet

16 - New 10" x30 Option Pipe **30 FT**

Calculated by: WDL 5/15/2014
Checked by: JTS 6/23/14, 12/10/14

601.0915e 18" CPEP Units: **LF**

1011 Roadway 91S	2011 Roadway 91N	3011 Roadway RT 5	1211 Bridge 43S	2211 Bridge 43N	1031 Training	1051 Erosion	1999 Full CE	Total Quantity
--	30	--	--	--	--	--	--	30

From Drainage Layout Sheet

16 - New 10" x30 Option Pipe **30 FT**

Calculated by: WDL 5/15/2014
Checked by: JTS 6/23/14, 12/10/14

601.2815f 18" CPPP (SL) Units: **LF**

1011 Roadway 91S	2011 Roadway 91N	3011 Roadway RT 5	1211 Bridge 43S	2211 Bridge 43N	1031 Training	1051 Erosion	1999 Full CE	Total Quantity
--	30	--	--	--	--	--	--	30

From Drainage Layout Sheet

16 - New 10" x30 Option Pipe **30 FT**

Calculated by: WDL 5/12/2014
Checked by: JTS, WDL 6/23/14, 11/7/14

604.18 PRECAST REINFORCED CONCRETE DROP INLET WITH CAST Units: **EACH**

1011 Roadway 91S	2011 Roadway 91N	3011 Roadway RT 5	1211 Bridge 43S	2211 Bridge 43N	1031 Training	1051 Erosion	1999 Full CE	Total Quantity
--	1	--	--	--	--	--	--	1

Quantity from Preliminary is still correct:

From Drainage Layout Sheet:

Precast Reinforced Concrete Drop Inlet with Cast Iron Grate:

252+00~ **1 ea**

Calculated by: WDL 11/7/2014
Checked by: JDG 11/8/2014

604.40 CHANGING ELEVATION OF DROP INLETS, CATCH BASINS, OR Units: **EACH**

1011 Roadway 91S	2011 Roadway 91N	3011 Roadway RT 5	1211 Bridge 43S	2211 Bridge 43N	1031 Training	1051 Erosion	1999 Full CE	Total Quantity
1	--	1	--	--	--	--	--	2

Quantity from Preliminary is still correct:

From Drainage Layout Sheet:

Changing elevation of Drop Inlet:

149+25~ **1 ea**

Changing elevation of manhole:

354+00~ **1 ea**

Calculated by: WDL 11/7/2014
Checked by: JDG 12/10/2014

604.55 CAST IRON COVER WITH FRAME Units: **EACH**

1011 Roadway 91S	2011 Roadway 91N	3011 Roadway RT 5	1211 Bridge 43S	2211 Bridge 43N	1031 Training	1051 Erosion	1999 Full CE	Total Quantity
--	--	1	--	--	--	--	--	1

Quantity from Preliminary is still correct:

From Drainage Layout Sheet:

#21 New Cast Iron cover with Frame 1 RT 5

Calculated by: JTS 6/26/2014
Checked by: WDL 7/1/14 11/6/14

609.10 DUST CONTROL WITH WATER Units: **MGAL**

1011 Roadway 91S	2011 Roadway 91N	3011 Roadway RT 5	1211 Bridge 43S	2211 Bridge 43N	1031 Training	1051 Erosion	1999 Full CE	Total Quantity
--	--	--	--	--	--	280	--	280

Quantities calculated and checked for Preliminary were verified and stand. WDL 11/6/14

Calculated by: JTS 6/26/2014
Checked by: WDL 7/1/14 11/6/14

609.15 DUST AND ICE CONTROL WITH CALCIUM CHLORIDE Units: **TON**

1011 Roadway 91S	2011 Roadway 91N	3011 Roadway RT 5	1211 Bridge 43S	2211 Bridge 43N	1031 Training	1051 Erosion	1999 Full CE	Total Quantity
--	--	--	--	--	--	2	--	2

Quantities calculated and checked for Preliminary were verified and stand. WDL 11/6/14

Calculated by: preliminary __
Checked by: JTS 12/12/2014

613.11 STONE FILL, TYPE II Units: **CY**

1011 Roadway 91S	2011 Roadway 91N	3011 Roadway RT 5	1211 Bridge 43S	2211 Bridge 43N	1031 Training	1051 Erosion	1999 Full CE	Total Quantity
90	2	--	--	--	--	--	--	92

Calculated by: JTS 12/11/2014
Checked by: WDL 12/11/2014

616.20 GRANITE SLOPE EDGING Units: **LF**

1011 Roadway 91S	2011 Roadway 91N	3011 Roadway RT 5	1211 Bridge 43S	2211 Bridge 43N	1031 Training	1051 Erosion	1999 Full CE	Total Quantity
--	--	648	--	--	--	--	--	648

Calculated by: JTS 12/11/2014
Checked by: WDL 12/11/2014

616.21 VERTICAL GRANITE CURB Units: **LF**

1011 Roadway 91S	2011 Roadway 91N	3011 Roadway RT 5	1211 Bridge 43S	2211 Bridge 43N	1031 Training	1051 Erosion	1999 Full CE	Total Quantity
--	--	362	--	--	--	--	--	362

Calculated by: JTS 12/10/2014
Checked by: WDL 12/11/2014

616.305 BITUMINOUS CONCRETE CURB, TYPE A Units: **LF**

1011 Roadway 91S	2011 Roadway 91N	3011 Roadway RT 5	1211 Bridge 43S	2211 Bridge 43N	1031 Training	1051 Erosion	1999 Full CE	Total Quantity
58	48	--	--	--	--	--	--	106

Calculated by: JTS/WDL 6/14
Checked by: JTS 12/12/2014

619.16 STEEL MARKER POSTS Units: **EACH**

1011 Roadway 91S	2011 Roadway 91N	3011 Roadway RT 5	1211 Bridge 43S	2211 Bridge 43N	1031 Training	1051 Erosion	1999 Full CE	Total Quantity
4	2	5	--	--	--	--	--	11

Calculated by: KRF/WDL 7/9/2014
Checked by: WDL 12/11/2014

620.50 REMOVING AND RESETTING FENCE Units: **LF**

1011 Roadway 91S	2011 Roadway 91N	3011 Roadway RT 5	1211 Bridge 43S	2211 Bridge 43N	1031 Training	1051 Erosion	1999 Full CE	Total Quantity
--	--	100	--	--	--	--	--	100

Calculated by: JTS 12/10/2014
Checked by: JDG 12/10/2014

621.20 STEEL BEAM GUARDRAIL, GALVANIZED Units: **LF**

1011 Roadway 91S	2011 Roadway 91N	3011 Roadway RT 5	1211 Bridge 43S	2211 Bridge 43N	1031 Training	1051 Erosion	1999 Full CE	Total Quantity
389.5	564.5	--	--	--	--	--	--	954

Calculated by: JTS 12/10/2014
Checked by: JDG 12/10/2014

621.205 STEEL BEAM GUARDRAIL, GALVANIZED W/2.4 M (8 FEET) POS Units: **LF**

1011 Roadway 91S	2011 Roadway 91N	3011 Roadway RT 5	1211 Bridge 43S	2211 Bridge 43N	1031 Training	1051 Erosion	1999 Full CE	Total Quantity
--	58	--	--	--	--	--	--	58

Calculated by: JTS 12/10/2014
Checked by: JDG 12/10/2014

621.50 MANUFACTURED TERMINAL SECTION, FLARED Units: **EACH**

1011 Roadway 91S	2011 Roadway 91N	3011 Roadway RT 5	1211 Bridge 43S	2211 Bridge 43N	1031 Training	1051 Erosion	1999 Full CE	Total Quantity
--	1	--	--	--	--	--	--	1

Calculated by: JTS 12/10/2014
Checked by: JDG 12/10/2014

621.60 ANCHOR FOR STEEL BEAM RAIL Units: **EACH**

1011 Roadway 91S	2011 Roadway 91N	3011 Roadway RT 5	1211 Bridge 43S	2211 Bridge 43N	1031 Training	1051 Erosion	1999 Full CE	Total Quantity
1	5	--	--	--	--	--	--	6

Calculated by: WDL 11/5/2014
Checked by: JTS 12/10/2014

621.747 GUARDRAIL APPROACH SECTION TO CONCRETE BRIDGE RAILING, TL-3 Units: **EACH**

1011 Roadway 91S	2011 Roadway 91N	3011 Roadway RT 5	1211 Bridge 43S	2211 Bridge 43N	1031 Training	1051 Erosion	1999 Full CE	Total Quantity
4	4	--	--	--	--	--	--	8

Calculated by: JTS 12/10/2014
Checked by: JDG 12/10/2014

621.75 REMOVE AND RESET GUARDRAIL Units: **LF**

1011 Roadway 91S	2011 Roadway 91N	3011 Roadway RT 5	1211 Bridge 43S	2211 Bridge 43N	1031 Training	1051 Erosion	1999 Full CE	Total Quantity
100	75	--	--	--	--	--	--	175

Calculated by: JDG 12/10/2014
Checked by: JTS 12/12/2014

621.80 REMOVAL AND DISPOSAL OF GUARDRAIL Units: **LF**

1011 Roadway 91S	2011 Roadway 91N	3011 Roadway RT 5	1211 Bridge 43S	2211 Bridge 43N	1031 Training	1051 Erosion	1999 Full CE	Total Quantity
375	650	300	--	--	--	--	--	1325

Calculated by: JTS 12/5/2014
Checked by: WDL 12/11/2014

621.90 TEMPORARY TRAFFIC BARRIER Units: **LF**

1011 Roadway 91S	2011 Roadway 91N	3011 Roadway RT 5	1211 Bridge 43S	2211 Bridge 43N	1031 Training	1051 Erosion	1999 Full CE	Total Quantity
--	1310	1600	--	--	--	--	--	2910

Calculated by: JTS 12/5/2014
Checked by: WDL 12/11/2014

621.95 REMOVE AND RESET TEMPORARY TRAFFIC BARRIER Units: **LF**

1011 Roadway 91S	2011 Roadway 91N	3011 Roadway RT 5	1211 Bridge 43S	2211 Bridge 43N	1031 Training	1051 Erosion	1999 Full CE	Total Quantity
810	--	--	--	--	--	--	--	810

Calculated by: JTS 12/11/2014
Checked by: KMH 12/11/2014

630.15 FLAGGERS Units: **HR**

1011 Roadway 91S	2011 Roadway 91N	3011 Roadway RT 5	1211 Bridge 43S	2211 Bridge 43N	1031 Training	1051 Erosion	1999 Full CE	Total Quantity
2250	2250	--	--	--	--	--	--	4500

Calculated by: WDL 11/3/2014
Checked by: JDG 11/4/2014

631.10 FIELD OFFICE, ENGINEERS Units: **LS**

1011 Roadway 91S	2011 Roadway 91N	3011 Roadway RT 5	1211 Bridge 43S	2211 Bridge 43N	1031 Training	1051 Erosion	1999 Full CE	Total Quantity
--	--	--	--	--	--	--	1	1

Calculated by: WDL 11/3/2014
Checked by: JDG 11/4/2014

631.16 TESTING EQUIPMENT, CONCRETE Units: **LS**

1011 Roadway 91S	2011 Roadway 91N	3011 Roadway RT 5	1211 Bridge 43S	2211 Bridge 43N	1031 Training	1051 Erosion	1999 Full CE	Total Quantity
--	--	--	--	--	--	--	1	1

Calculated by: WDL 11/3/2014
Checked by: JDG 11/4/2014

631.17 TESTING EQUIPMENT, BITUMINOUS Units: **LS**

1011 Roadway 91S	2011 Roadway 91N	3011 Roadway RT 5	1211 Bridge 43S	2211 Bridge 43N	1031 Training	1051 Erosion	1999 Full CE	Total Quantity
--	--	--	--	--	--	--	1	1

Calculated by: WDL 11/7/2014
Checked by: WDL 11/7/2014

631.26 FIELD OFFICE TELEPHONE (N.A.B.I.) Units: **DL**

1011 Roadway 91S	2011 Roadway 91N	3011 Roadway RT 5	1211 Bridge 43S	2211 Bridge 43N	1031 Training	1051 Erosion	1999 Full CE	Total Quantity
--	--	--	--	--	--	--	5000	5000

Use QTY from Preliminary Plans

Calculated by: preliminary __
Checked by: __ __

634.10 EMPLOYEE TRAINEESHIP Units: **HR**

1011 Roadway 91S	2011 Roadway 91N	3011 Roadway RT 5	1211 Bridge 43S	2211 Bridge 43N	1031 Training	1051 Erosion	1999 Full CE	Total Quantity
--	--	--	--	--	1040	--	--	1040

Calculated by: WDL 11/3/2014
Checked by: JDG 11/4/2014

635.11 MOBILIZATION/DEMOBILIZATION Units: **LS**

1011 Roadway 91S	2011 Roadway 91N	3011 Roadway RT 5	1211 Bridge 43S	2211 Bridge 43N	1031 Training	1051 Erosion	1999 Full CE	Total Quantity
--	--	--	--	--	--	--	1	1

Calculated by: WDL 11/3/2014
Checked by: JDG 11/4/2014

641.10a TRAFFIC CONTROL (I-91 NORTHBOUND) Units: **LS**

1011 Roadway 91S	2011 Roadway 91N	3011 Roadway RT 5	1211 Bridge 43S	2211 Bridge 43N	1031 Training	1051 Erosion	1999 Full CE	Total Quantity
--	1	--	--	--	--	--	--	1

Calculated by: WDL 11/3/2014
Checked by: JDG 11/4/2014

641.10b TRAFFIC CONTROL (I-91 SOUTHBOUND) Units: **LS**

1011 Roadway 91S	2011 Roadway 91N	3011 Roadway RT 5	1211 Bridge 43S	2211 Bridge 43N	1031 Training	1051 Erosion	1999 Full CE	Total Quantity
1	--	--	--	--	--	--	--	1

Calculated by: WDL 11/3/2014
Checked by: JDG 11/4/2014

641.10c TRAFFIC CONTROL (US RT 5) Units: **LS**

1011 Roadway 91S	2011 Roadway 91N	3011 Roadway RT 5	1211 Bridge 43S	2211 Bridge 43N	1031 Training	1051 Erosion	1999 Full CE	Total Quantity
--	--	1	--	--	--	--	--	1

Calculated by: preliminary __
Checked by: JTS 12/12/2014

641.15 PORTABLE CHANGEABLE MESSAGE SIGN Units: **EACH**

1011 Roadway 91S	2011 Roadway 91N	3011 Roadway RT 5	1211 Bridge 43S	2211 Bridge 43N	1031 Training	1051 Erosion	1999 Full CE	Total Quantity
2	2	2	--	--	--	--	--	6

Calculated by: JTS 12/5/2014
Checked by: __ __

641.16 PORTABLE ARROW BOARD Units: **EACH**

1011 Roadway 91S	2011 Roadway 91N	3011 Roadway RT 5	1211 Bridge 43S	2211 Bridge 43N	1031 Training	1051 Erosion	1999 Full CE	Total Quantity
1	1	--	--	--	--	--	--	2

Calculated by: JTS 12/11/2014
Checked by: JDG 12/12/2014

646.404 DURABLE 4 INCH WHITE LINE, POLYUREA Units: **LF**

1011 Roadway 91S	2011 Roadway 91N	3011 Roadway RT 5	1211 Bridge 43S	2211 Bridge 43N	1031 Training	1051 Erosion	1999 Full CE	Total Quantity
--	--	3750	--	--	--	--	--	3750

Calculated by: JTS 12/11/2014
Checked by: JDG 12/12/2014

646.414 DURABLE 4 INCH YELLOW LINE, POLYUREA Units: **LF**

1011 Roadway 91S	2011 Roadway 91N	3011 Roadway RT 5	1211 Bridge 43S	2211 Bridge 43N	1031 Training	1051 Erosion	1999 Full CE	Total Quantity
--	--	4040	--	--	--	--	--	4040

Calculated by: JTS 12/10/2014
Checked by: JDG 12/12/2014

646.426 DURABLE 6 INCH WHITE LINE, RECESSED POLYUREA Units: **LF**

1011 Roadway 91S	2011 Roadway 91N	3011 Roadway RT 5	1211 Bridge 43S	2211 Bridge 43N	1031 Training	1051 Erosion	1999 Full CE	Total Quantity
861	654	--	--	--	--	--	--	1515

Calculated by: JTS 12/10/2014
Checked by: __ __

646.436 DURABLE 6 INCH YELLOW LINE, RECESSED POLYUREA Units: **LF**

1011 Roadway 91S	2011 Roadway 91N	3011 Roadway RT 5	1211 Bridge 43S	2211 Bridge 43N	1031 Training	1051 Erosion	1999 Full CE	Total Quantity
550	528	--	--	--	--	--	--	1078

Calculated by: JTS 12/10/2014
Checked by: JDG 12/12/2014

646.444 DURABLE 8 INCH WHITE LINE, POLYUREA Units: **LF**

1011 Roadway 91S	2011 Roadway 91N	3011 Roadway RT 5	1211 Bridge 43S	2211 Bridge 43N	1031 Training	1051 Erosion	1999 Full CE	Total Quantity
--	--	835	--	--	--	--	--	835

Calculated by: JTS 12/10/2014
Checked by: JDG 12/12/2014

646.454 DURABLE 8 INCH YELLOW LINE, POLYUREA Units: **LF**

1011 Roadway 91S	2011 Roadway 91N	3011 Roadway RT 5	1211 Bridge 43S	2211 Bridge 43N	1031 Training	1051 Erosion	1999 Full CE	Total Quantity
--	--	500	--	--	--	--	--	500

Calculated by: JTS 12/10/2014
Checked by: JDG 12/12/2014

646.466 DURABLE 12 INCH WHITE LINE, RECESSED POLYUREA Units: **LF**

1011 Roadway 91S	2011 Roadway 91N	3011 Roadway RT 5	1211 Bridge 43S	2211 Bridge 43N	1031 Training	1051 Erosion	1999 Full CE	Total Quantity
50	--	--	--	--	--	--	--	50

Calculated by: JTS 12/10/2014
Checked by: JDG 12/12/2014

646.484 DURABLE 24 INCH STOP BAR, POLYUREA Units: **LF**

1011 Roadway 91S	2011 Roadway 91N	3011 Roadway RT 5	1211 Bridge 43S	2211 Bridge 43N	1031 Training	1051 Erosion	1999 Full CE	Total Quantity
--	--	60	--	--	--	--	--	60

Calculated by: JTS 12/12/2014
Checked by: JDG 12/12/2014

646.494 DURABLE LETTER OR SYMBOL, POLYUREA Units: **EACH**

1011 Roadway 91S	2011 Roadway 91N	3011 Roadway RT 5	1211 Bridge 43S	2211 Bridge 43N	1031 Training	1051 Erosion	1999 Full CE	Total Quantity
--	--	49	--	--	--	--	--	49

Calculated by: JTS 12/5/2014
Checked by: __ __

646.600 TEMPORARY 4 INCH WHITE LINE Units: **LF**

1011 Roadway 91S	2011 Roadway 91N	3011 Roadway RT 5	1211 Bridge 43S	2211 Bridge 43N	1031 Training	1051 Erosion	1999 Full CE	Total Quantity
--	--	3200	--	--	--	--	--	3200

Calculated by: JTS 12/5/2014
Checked by: __ __

646.610 TEMPORARY 4 INCH YELLOW LINE Units: **LF**

1011 Roadway 91S	2011 Roadway 91N	3011 Roadway RT 5	1211 Bridge 43S	2211 Bridge 43N	1031 Training	1051 Erosion	1999 Full CE	Total Quantity
--	--	2625	--	--	--	--	--	2625

Calculated by: JTS 12/4/2014
Checked by: __ __

646.620 TEMPORARY 6 INCH WHITE LINE Units: **LF**

1011 Roadway 91S	2011 Roadway 91N	3011 Roadway RT 5	1211 Bridge 43S	2211 Bridge 43N	1031 Training	1051 Erosion	1999 Full CE	Total Quantity
--	1700	--	--	--	--	--	--	1700

Calculated by: JTS 12/5/2014
Checked by: __ __

646.630 TEMPORARY 6 INCH YELLOW LINE Units: **LF**

1011 Roadway 91S	2011 Roadway 91N	3011 Roadway RT 5	1211 Bridge 43S	2211 Bridge 43N	1031 Training	1051 Erosion	1999 Full CE	Total Quantity
--	1350	--	--	--	--	--	--	1350

Calculated by: JTS 12/5/2014
Checked by: __ __

646.640 TEMPORARY 8 INCH WHITE LINE Units: **LF**

1011 Roadway 91S	2011 Roadway 91N	3011 Roadway RT 5	1211 Bridge 43S	2211 Bridge 43N	1031 Training	1051 Erosion	1999 Full CE	Total Quantity
--	--	560	--	--	--	--	--	560

Calculated by: JTS 12/5/2014
Checked by: __ __

646.680 TEMPORARY 24 INCH STOP BAR Units: **LF**

1011 Roadway 91S	2011 Roadway 91N	3011 Roadway RT 5	1211 Bridge 43S	2211 Bridge 43N	1031 Training	1051 Erosion	1999 Full CE	Total Quantity
--	--	150	--	--	--	--	--	150

Calculated by: JTS 12/5/2014
Checked by: __ __

646.690 TEMPORARY LETTER OR SYMBOL Units: **EACH**

1011 Roadway 91S	2011 Roadway 91N	3011 Roadway RT 5	1211 Bridge 43S	2211 Bridge 43N	1031 Training	1051 Erosion	1999 Full CE	Total Quantity
--	--	26	--	--	--	--	--	26

Calculated by: JTS 12/5/2014
Checked by: __ __

646.85 REMOVAL OF EXISTING PAVEMENT MARKINGS Units: **SF**

1011 Roadway 91S	2011 Roadway 91N	3011 Roadway RT 5	1211 Bridge 43S	2211 Bridge 43N	1031 Training	1051 Erosion	1999 Full CE	Total Quantity
--	--	850	--	--	--	--	--	850

Calculated by: JTS 12/4/2014
Checked by: __ __

646.86 PAVEMENT MARKING MASK Units: **SF**

1011 Roadway 91S	2011 Roadway 91N	3011 Roadway RT 5	1211 Bridge 43S	2211 Bridge 43N	1031 Training	1051 Erosion	1999 Full CE	Total Quantity
--	900	--	--	--	--	--	--	900

Calculated by: preliminary __
Checked by: __ __

649.11 GEOTEXTILE FOR ROADBED SEPARATOR Units: **SY**

1011 Roadway 91S	2011 Roadway 91N	3011 Roadway RT 5	1211 Bridge 43S	2211 Bridge 43N	1031 Training	1051 Erosion	1999 Full CE	Total Quantity
825	800	--	--	--	--	--	--	1625

Calculated by: JTS 12/12/2014
Checked by: JDG 12/12/2014

649.31 GEOTEXTILE UNDER STONE FILL Units: **SY**

1011 Roadway 91S	2011 Roadway 91N	3011 Roadway RT 5	1211 Bridge 43S	2211 Bridge 43N	1031 Training	1051 Erosion	1999 Full CE	Total Quantity
180	3	--	--	--	--	--	--	183

Calculated by: JTS 6/26/2014
Checked by: WDL 7/1/14 11/6/14

649.51 GEOTEXTILE FOR SILT FENCE Units: **SY**

1011 Roadway 91S	2011 Roadway 91N	3011 Roadway RT 5	1211 Bridge 43S	2211 Bridge 43N	1031 Training	1051 Erosion	1999 Full CE	Total Quantity
--	--	--	--	--	--	1600	--	1600

Quantities calculated and checked for Preliminary still stand. WDL 11/6/14

Calculated by: JTS 6/26/2014
Checked by: WDL 7/1/14 11/6/14

651.15 SEED Units: **LB**

1011 Roadway 91S	2011 Roadway 91N	3011 Roadway RT 5	1211 Bridge 43S	2211 Bridge 43N	1031 Training	1051 Erosion	1999 Full CE	Total Quantity
--	--	--	--	--	--	105	--	105

Quantities calculated and checked for Preliminary still stand. WDL 11/6/14

Calculated by: JTS 6/26/2014
Checked by: WDL 7/1/14 11/6/14

651.18 FERTILIZER Units: **LB**

1011 Roadway 91S	2011 Roadway 91N	3011 Roadway RT 5	1211 Bridge 43S	2211 Bridge 43N	1031 Training	1051 Erosion	1999 Full CE	Total Quantity
--	--	--	--	--	--	860	--	860

Quantities calculated and checked for Preliminary still stand. WDL 11/6/14

Calculated by: JTS 6/26/2014
Checked by: WDL 7/1/14 11/6/14

651.20 AGRICULTURAL LIMESTONE Units: **TON**

1011 Roadway 91S	2011 Roadway 91N	3011 Roadway RT 5	1211 Bridge 43S	2211 Bridge 43N	1031 Training	1051 Erosion	1999 Full CE	Total Quantity
--	--	--	--	--	--	4	--	4

Quantities calculated and checked for Preliminary still stand. WDL 11/6/14

Calculated by: JTS 6/26/2014
Checked by: WDL 7/1/14 11/6/14

651.25 HAY MULCH Units: **TON**

1011 Roadway 91S	2011 Roadway 91N	3011 Roadway RT 5	1211 Bridge 43S	2211 Bridge 43N	1031 Training	1051 Erosion	1999 Full CE	Total Quantity
--	--	--	--	--	--	4	--	4

Quantities calculated and checked for Preliminary still stand. WDL 11/6/14

Calculated by: JTS 6/26/2014
Checked by: WDL 7/1/14 11/6/14

651.35 TOPSOIL Units: **CY**

1011 Roadway 91S	2011 Roadway 91N	3011 Roadway RT 5	1211 Bridge 43S	2211 Bridge 43N	1031 Training	1051 Erosion	1999 Full CE	Total Quantity
--	--	--	--	--	--	930	--	930

Quantities calculated and checked for Preliminary still stand. WDL 11/6/14

Calculated by: JTS 6/26/2014
Checked by: WDL 7/1/14 11/6/14

652.10 EPSC PLAN Units: **LS**

1011 Roadway 91S	2011 Roadway 91N	3011 Roadway RT 5	1211 Bridge 43S	2211 Bridge 43N	1031 Training	1051 Erosion	1999 Full CE	Total Quantity
--	--	--	--	--	--	1	--	1

Quantities calculated and checked for Preliminary still stand. WDL 11/6/14

Calculated by: JTS 6/26/2014
Checked by: WDL 7/1/14 11/6/14

652.20 MONITORING EPSC PLAN Units: **HR**

1011 Roadway 91S	2011 Roadway 91N	3011 Roadway RT 5	1211 Bridge 43S	2211 Bridge 43N	1031 Training	1051 Erosion	1999 Full CE	Total Quantity
--	--	--	--	--	--	200	--	200

Quantities calculated and checked for Preliminary were revised from 100 hrs to 200 hrs during discussions w/PCL. WDL 11/6/14

Calculated by: JTS 6/26/2014
Checked by: WDL 7/1/14 11/6/14

652.30 MAINTENANCE OF EPSC PLAN (N.A.B.I.) Units: **LU**

1011 Roadway 91S	2011 Roadway 91N	3011 Roadway RT 5	1211 Bridge 43S	2211 Bridge 43N	1031 Training	1051 Erosion	1999 Full CE	Total Quantity
--	--	--	--	--	--	1	--	1

Quantities calculated and checked for Preliminary still stand. WDL 11/6/14

Calculated by: JTS 6/26/2014
Checked by: WDL 7/1/14 11/6/14

653.20 TEMPORARY EROSION MATTING Units: **SY**

1011 Roadway 91S	2011 Roadway 91N	3011 Roadway RT 5	1211 Bridge 43S	2211 Bridge 43N	1031 Training	1051 Erosion	1999 Full CE	Total Quantity
--	--	--	--	--	--	1425	--	1425

Quantities calculated and checked for Preliminary adjust down based on new area. WDL 11/6/14

653.2 **TEMPORARY EROSION MATTING** Say ~~1600~~ SY
1425 sf

Area measured in 12a132qnt_epsc.dgn

12827 sf
~~14272.24~~ SF
\+ 9 SF/SY
~~1585.804~~ SY
1425 sf

Calculated by: JTS 6/26/2014
Checked by: WDL 7/1/14 11/6/14

653.25 TEMPORARY STONE CHECK DAM, TYPE I Units: **CY**

1011 Roadway 91S	2011 Roadway 91N	3011 Roadway RT 5	1211 Bridge 43S	2211 Bridge 43N	1031 Training	1051 Erosion	1999 Full CE	Total Quantity
--	--	--	--	--	--	20	--	20

Quantities calculated and checked for Preliminary still stand. WDL 11/6/14

Calculated by: JTS 6/26/2014
Checked by: WDL 7/1/14 11/6/14

653.35 VEHICLE TRACKING PAD Units: **CY**

1011 Roadway 91S	2011 Roadway 91N	3011 Roadway RT 5	1211 Bridge 43S	2211 Bridge 43N	1031 Training	1051 Erosion	1999 Full CE	Total Quantity
--	--	--	--	--	--	200	--	200

Quantities calculated and checked for Preliminary still stand. WDL 11/6/14

Calculated by: JTS 6/26/2014
Checked by: WDL 7/1/14 11/6/14

653.40 INLET PROTECTION DEVICE, TYPE I Units: **EACH**

1011 Roadway 91S	2011 Roadway 91N	3011 Roadway RT 5	1211 Bridge 43S	2211 Bridge 43N	1031 Training	1051 Erosion	1999 Full CE	Total Quantity
--	--	--	--	--	--	11	--	11

Quantities calculated and checked for Preliminary still stand. WDL 11/6/14

Calculated by: JTS 6/26/2014
Checked by: WDL 7/1/14 11/6/14

653.50 BARRIER FENCE Units: **LF**

1011 Roadway 91S	2011 Roadway 91N	3011 Roadway RT 5	1211 Bridge 43S	2211 Bridge 43N	1031 Training	1051 Erosion	1999 Full CE	Total Quantity
--	--	--	--	--	--	3925	--	3925

Quantities calculated and checked for Preliminary still stand. WDL 11/6/14

Calculated by: JTS/WDL 6/14
Checked by: JTS 12/10/2014

675.20 TRAFFIC SIGNS, TYPE A Units: **SF**

1011 Roadway 91S	2011 Roadway 91N	3011 Roadway RT 5	1211 Bridge 43S	2211 Bridge 43N	1031 Training	1051 Erosion	1999 Full CE	Total Quantity
4.66	4.66	68.63	--	--	--	--	--	77.95

Calculated by: JTS/WDL 6/14
Checked by: JTS 12/11/2014

675.341 SQUARE TUBE SIGN POST AND ANCHOR Units: **LF**

1011 Roadway 91S	2011 Roadway 91N	3011 Roadway RT 5	1211 Bridge 43S	2211 Bridge 43N	1031 Training	1051 Erosion	1999 Full CE	Total Quantity
24	24	135	--	--	--	--	--	183

Calculated by: WDL 11/6/2014
Checked by: JDG 12/9/2014

675.50 REMOVING SIGNS Units: **EACH**

1011 Roadway 91S	2011 Roadway 91N	3011 Roadway RT 5	1211 Bridge 43S	2211 Bridge 43N	1031 Training	1051 Erosion	1999 Full CE	Total Quantity
6	2	26	--	--	--	--	--	34

I-91S			
	Ramp A	4	EA
	Mainline	2	EA
I-91N	Mainline	2	EA
RT 5	Mainline	26	EA
	Total	34	EA

Calculated by: JDG 12/10/2014
Checked by: JTS 12/11/2014

675.60 ERECTING SALVAGED SIGNS Units: **EACH**

1011 Roadway 91S	2011 Roadway 91N	3011 Roadway RT 5	1211 Bridge 43S	2211 Bridge 43N	1031 Training	1051 Erosion	1999 Full CE	Total Quantity
--	--	8	--	--	--	--	--	8

Calculated by: JTS/WDL 6/14
Checked by: JTS 12/10/2014

676.10a DELINEATOR WITH STEEL POST (BLUE) Units: **EACH**

1011 Roadway 91S	2011 Roadway 91N	3011 Roadway RT 5	1211 Bridge 43S	2211 Bridge 43N	1031 Training	1051 Erosion	1999 Full CE	Total Quantity
--	2	--	--	--	--	--	--	2

Calculated by: JTS/WDL 6/14
Checked by: JTS 12/10/2014

676.10b DELINEATOR WITH STEEL POST (GREEN) Units: **EACH**

1011 Roadway 91S	2011 Roadway 91N	3011 Roadway RT 5	1211 Bridge 43S	2211 Bridge 43N	1031 Training	1051 Erosion	1999 Full CE	Total Quantity
1	1		--	--	--	--	--	2

Calculated by: JTS/WDL 6/14
Checked by: JTS 12/10/2014

676.10c DELINEATOR WITH STEEL POST (YELLOW) Units: **EACH**

1011 Roadway 91S	2011 Roadway 91N	3011 Roadway RT 5	1211 Bridge 43S	2211 Bridge 43N	1031 Training	1051 Erosion	1999 Full CE	Total Quantity
2	2	--	--	--	--	--	--	4

Calculated by: WDL 11/6/2014
Checked by: JDG 12/8/2014

676.12 REMOVAL OF EXISTING DELINEATOR Units: **EACH**

1011 Roadway 91S	2011 Roadway 91N	3011 Roadway RT 5	1211 Bridge 43S	2211 Bridge 43N	1031 Training	1051 Erosion	1999 Full CE	Total Quantity
2	3	6	--	--	--	--	--	11

RAMP A:

676.12 Removal of Existing Delineator SAY 6.00 EA
Google Earth Street view used to quantify
6 Delineators

I-91 S 2 EA

I-91N 3 EA

Calculated by: WDL 11/7/2014
Checked by: WDL 11/7/2014

677.25 REMOVE AND RESET OVERHEAD TRAFFIC SIGN SUPPORT Units: **EACH**

1011 Roadway 91S	2011 Roadway 91N	3011 Roadway RT 5	1211 Bridge 43S	2211 Bridge 43N	1031 Training	1051 Erosion	1999 Full CE	Total Quantity
--	--	1	--	--	--	--	--	1

Qty from Preliminary plans is correct - one sign support on RT5.

Calculated by: WDL 11/7/2014
Checked by: WDL 11/7/2014

678.40 TEMPORARY TRAFFIC SIGNAL SYSTEM Units: **EACH**

1011 Roadway 91S	2011 Roadway 91N	3011 Roadway RT 5	1211 Bridge 43S	2211 Bridge 43N	1031 Training	1051 Erosion	1999 Full CE	Total Quantity
--	--	2	--	--	--	--	--	2

Qty calculated for Preliminary plans is correct - two on RT 5.

Calculated by: WDL 11/7/2014
Checked by: WDL 11/7/2014

679.25 REMOVING AND RESETTING LIGHT POLE Units: **EACH**

1011 Roadway 91S	2011 Roadway 91N	3011 Roadway RT 5	1211 Bridge 43S	2211 Bridge 43N	1031 Training	1051 Erosion	1999 Full CE	Total Quantity
--	--	1	--	--	--	--	--	1

Qty calculated for Preliminary plans is correct - one on RT 5.

Calculated by: WDL 11/3/2014
Checked by: JDG 11/4/2014

690.50 PRICE ADJUSTMENT, FUEL (N.A.B.I.) Units: **LU**

1011 Roadway 91S	2011 Roadway 91N	3011 Roadway RT 5	1211 Bridge 43S	2211 Bridge 43N	1031 Training	1051 Erosion	1999 Full CE	Total Quantity
--	--	--	--	--	--	--	1	1

Calculated by: RMK/WDL JUL 2014
Checked by: WDL 11/4/2014

900.608 SPECIAL PROVISION (HIGH PERFORMANCE CONCRETE, RAPID SET)(FPQ) Units: **CY**

1011 Roadway 91S	2011 Roadway 91N	3011 Roadway RT 5	1211 Bridge 43S	2211 Bridge 43N	1031 Training	1051 Erosion	1999 Full CE	Total Quantity
--	--	--	2	2	--	--	--	4

The quantities below, calculated and checked for Preliminary still stand, WDL 11/4/2014

SOUTHBOUND

900.608 SPECIAL PROVISION (HIGH PERFORMANCE CONCRETE, RAPID SET)(FPQ)

Calc By: RMK 6/26/2014
Check By: WDL 7/2/2014

LEVEL 21

Area: 1.07 sf

PCL is proposing 2 sections, 1 joint.

Number of longitudinal joints: 2 ea (per approach slab)

Joint length: 20 ft

Total 3.17037 CY SAY 2 CY 4 CY

NORTHBOUND

900.608 SPECIAL PROVISION (HIGH PERFORMANCE CONCRETE, RAPID SET)(FPQ)

Calc By: RMK 6/26/2014
Check By: WDL 7/2/2014

LEVEL 21

Area: 1.07 sf

PCL is proposing 2 sections, 1 joint.

Number of longitudinal joints: 2 ea (per approach slab)

Joint length: 20 ft

Total 3.17037 CY SAY 2 CY 4 CY

Calculated by: WDL 11/3/2014
Checked by: JDG 11/4/2014

900.615a SPECIAL PROVISION (PEDESTRIAN SHUTTLE)(N.A.B.I) Units: **DL**

1011 Roadway 91S	2011 Roadway 91N	3011 Roadway RT 5	1211 Bridge 43S	2211 Bridge 43N	1031 Training	1051 Erosion	1999 Full CE	Total Quantity
--	--	7500	--	--	--	--	--	7500

~~1 LU Pedestrian Shuttle for both weekend closures.~~

~~11/3/2014: KH said to use $7,500 for estimate~~

12/10/15 KH said to change to DL.

Calculated by: KMH 12/11/2014
Checked by: KMH 12/11/2014

900.615b SPECIAL PROVISION (UNIFORMED TRAFFIC OFFICERS) Units: **DL**

1011 Roadway 91S	2011 Roadway 91N	3011 Roadway RT 5	1211 Bridge 43S	2211 Bridge 43N	1031 Training	1051 Erosion	1999 Full CE	Total Quantity
110000	110000	--	--	--	--	--	--	220000

Previous values when hours:

2250	2250

Calculated by: WDL 11/7/2014
Checked by: WDL 11/7/2014

900.620a SPECIAL PROVISION (GPS TIME CLOCK) Units: **EACH**

1011 Roadway 91S	2011 Roadway 91N	3011 Roadway RT 5	1211 Bridge 43S	2211 Bridge 43N	1031 Training	1051 Erosion	1999 Full CE	Total Quantity
--	--	1	--	--	--	--	--	1

Qty from Preliminary is correct

Calculated by: WDL 11/26/2014
Checked by: KMH 12/9/2014

900.620b SPECIAL PROVISION (CPM SCHEDULE) Units: **EACH**

1011 Roadway 91S	2011 Roadway 91N	3011 Roadway RT 5	1211 Bridge 43S	2211 Bridge 43N	1031 Training	1051 Erosion	1999 Full CE	Total Quantity
--	--	--	--	--	--	--	8	8

Calculated by: WDL 11/7/2014
Checked by: WDL 11/7/2014

900.620c SPECIAL PROVISION (TEMPORARY SUPPORTS AND HORIZONTAL SLIDE) Units: **EACH**

1011 Roadway 91S	2011 Roadway 91N	3011 Roadway RT 5	1211 Bridge 43S	2211 Bridge 43N	1031 Training	1051 Erosion	1999 Full CE	Total Quantity
--	--	--	1	1	--	--	--	2

Qty from Preliminary Plans is correct - one per bridge.

Calculated by: WDL 12/9/2014
Checked by: KMH 12/9/2014

900.630a SPECIAL PROVISION (UNEXPECTED OBSTRUCTION DRILLING Units: **HR**

1011 Roadway 91S	2011 Roadway 91N	3011 Roadway RT 5	1211 Bridge 43S	2211 Bridge 43N	1031 Training	1051 Erosion	1999 Full CE	Total Quantity
--	--	--	20	20	--	--	--	40

Calculated by: KMH 12/11/2014
Checked by: WDL 12/11/2014

900.630b SPECIAL PROVISION (JET DRYER) Units: **HR**

1011 Roadway 91S	2011 Roadway 91N	3011 Roadway RT 5	1211 Bridge 43S	2211 Bridge 43N	1031 Training	1051 Erosion	1999 Full CE	Total Quantity
5	5	--	--	--	--	--	--	10

Calculated by: RMK/WDL June 2014
Checked by: WDL 11/3/2014
Final Check: JDG 11/4/2014

900.635 SPECIAL PROVISION (STRUCTURAL STEEL, PLATE GIRDER, GRADE HPS 70W Units: **LB**

1011 Roadway 91S	2011 Roadway 91N	3011 Roadway RT 5	1211 Bridge 43S	2211 Bridge 43N	1031 Training	1051 Erosion	1999 Full CE	Total Quantity
--	--	--	--	88470	--	--	--	88470

The quantities below, calculated and checked for Preliminary still stand, WDL 11/3/2014

900.635 SPECIAL PROVISION (STRUCTURAL STEEL, PLATE GIRDER, GRADE HPS 70W)

Calc By: RMK 6/27/2014
Check By: WDL 7/2/2014

Bottom flange thickness	1.625	in
Bottom flange width	20	in

Total

88463.38 lb SAY 88470 LB

Formula uses correct girder length of 133.32'. Rounding is correct.

Calculated by: GML 11/25/2014
Checked by: WDL 12/5/2014

900.640a SPECIAL PROVISION (MICROPILE, CASED)(9.625") Units: **LF**

1011 Roadway 91S	2011 Roadway 91N	3011 Roadway RT 5	1211 Bridge 43S	2211 Bridge 43N	1031 Training	1051 Erosion	1999 Full CE	Total Quantity
--	--	--	960	450	--	--	--	1410

Calculated by: GML 11/25/2014
Checked by: WDL 12/5/2014

900.640b SPECIAL PROVISION (MICROPILE, UNCASED)(8.535") Units: **LF**

1011 Roadway 91S	2011 Roadway 91N	3011 Roadway RT 5	1211 Bridge 43S	2211 Bridge 43N	1031 Training	1051 Erosion	1999 Full CE	Total Quantity
--	--	--	235	95	--	--	--	330

Calculated by: WDL 11/3/2014
Checked by: JDG 11/4/2014

900.645a SPECIAL PROVISION (CONTRACTOR-FABRICATED PRECAST CONCRETE STRUCTURE)(APPROACH SLAB #1) Units: **LS**

1011 Roadway 91S	2011 Roadway 91N	3011 Roadway RT 5	1211 Bridge 43S	2211 Bridge 43N	1031 Training	1051 Erosion	1999 Full CE	Total Quantity
--	--	--	1	--	--	--	--	1

Calculated by: WDL 11/3/2014
Checked by: JDG 11/4/2014

900.645b SPECIAL PROVISION (CONTRACTOR-FABRICATED PRECAST CONCRETE STRUCTURE)(APPROACH SLAB #2) Units: **LS**

1011 Roadway 91S	2011 Roadway 91N	3011 Roadway RT 5	1211 Bridge 43S	2211 Bridge 43N	1031 Training	1051 Erosion	1999 Full CE	Total Quantity
--	--	--	1	--	--	--	--	1

Calculated by: WDL 11/3/2014
Checked by: JDG 11/4/2014

900.645c SPECIAL PROVISION (CONTRACTOR-FABRICATED PRECAST CONCRETE STRUCTURE)(APPROACH SLAB #3) Units: **LS**

1011 Roadway 91S	2011 Roadway 91N	3011 Roadway RT 5	1211 Bridge 43S	2211 Bridge 43N	1031 Training	1051 Erosion	1999 Full CE	Total Quantity
--	--	--	--	1	--	--	--	1

Calculated by: WDL 11/3/2014
Checked by: JDG 11/4/2014

900.645d SPECIAL PROVISION (CONTRACTOR-FABRICATED PRECAST CONCRETE STRUCTURE)(APPROACH SLAB #4) Units: **LS**

1011 Roadway 91S	2011 Roadway 91N	3011 Roadway RT 5	1211 Bridge 43S	2211 Bridge 43N	1031 Training	1051 Erosion	1999 Full CE	Total Quantity
--	--	--	--	1	--	--	--	1

Calculated by: WDL 11/3/2014
Checked by: JDG 11/4/2014

900.645e SPECIAL PROVISION (CPM SCHEDULE)(BRIDGE 43N) Units: **LS**

1011 Roadway 91S	2011 Roadway 91N	3011 Roadway RT 5	1211 Bridge 43S	2211 Bridge 43N	1031 Training	1051 Erosion	1999 Full CE	Total Quantity
--	--	--	--	1	--	--	--	1

Calculated by: WDL 11/3/2014
Checked by: JDG 11/4/2014

900.645f SPECIAL PROVISION (CPM SCHEDULE)(BRIDGE 43S) Units: **LS**

1011 Roadway 91S	2011 Roadway 91N	3011 Roadway RT 5	1211 Bridge 43S	2211 Bridge 43N	1031 Training	1051 Erosion	1999 Full CE	Total Quantity
--	--	--	1	--	--	--	--	1

Calculated by: WDL 11/3/2014
Checked by: WDL 12/10/2014

900.645g SPECIAL PROVISION (FURNISHING EQUIPMENT FOR INSTALL Units: **LS**

1011 Roadway 91S	2011 Roadway 91N	3011 Roadway RT 5	1211 Bridge 43S	2211 Bridge 43N	1031 Training	1051 Erosion	1999 Full CE	Total Quantity
--	--	--	1	--	--	--	--	1

Calculated by: WDL 11/3/2014
Checked by: JDG 11/4/2014

900.645h SPECIAL PROVISION (PUBLIC PROTECTION FOR BRIDGE PRC Units: **LS**

1011 Roadway 91S	2011 Roadway 91N	3011 Roadway RT 5	1211 Bridge 43S	2211 Bridge 43N	1031 Training	1051 Erosion	1999 Full CE	Total Quantity
--	--	1	--	--	--	--	--	1

Calculated by: WDL 11/5/2014
Checked by: WDL 12/10/2014

900.645i SPECIAL PROVISION (SMART WORK ZONE) Units: **LS**

1011 Roadway 91S	2011 Roadway 91N	3011 Roadway RT 5	1211 Bridge 43S	2211 Bridge 43N	1031 Training	1051 Erosion	1999 Full CE	Total Quantity
--	--	1	--	--	--	--	--	1

Calculated by: WDL 11/3/2014
Checked by: JDG 11/4/2014

900.650a SPECIAL PROVISION (INCENTIVE/DISINCENTIVE)(N.A.B.I.)(BRIDGE 43N) Units: **LU**

1011 Roadway 91S	2011 Roadway 91N	3011 Roadway RT 5	1211 Bridge 43S	2211 Bridge 43N	1031 Training	1051 Erosion	1999 Full CE	Total Quantity
--	--	--	--	1	--	--	--	1

Calculated by: WDL 11/3/2014
Checked by: JDG 11/4/2014

900.650b SPECIAL PROVISION (INCENTIVE/DISINCENTIVE)(N.A.B.I.)(BRIDGE 43S) Units: **LU**

1011 Roadway 91S	2011 Roadway 91N	3011 Roadway RT 5	1211 Bridge 43S	2211 Bridge 43N	1031 Training	1051 Erosion	1999 Full CE	Total Quantity
--	--	--	1	--	--	--	--	1

Calculated by: WDL 11/4/2014
Checked by: JDG 11/4/2014

900.670 SPECIAL PROVISION (PRECAST PRESTRESSED CONCRETE DECK PANEL)(3 1 Units: **SF**

1011 Roadway 91S	2011 Roadway 91N	3011 Roadway RT 5	1211 Bridge 43S	2211 Bridge 43N	1031 Training	1051 Erosion	1999 Full CE	Total Quantity
--	--	--	4402.0	4260.0	--	--	--	8662.0

SOUTHBOUND

900.670 SPECIAL PROVISION (PRECAST PRESTRESSED CONCRETE DECK PANEL)(3 1/2")

Calc By: WDL 11/4/2014
Check By:

LEVEL 25

Width of panel over flange:	4	in
Girder spacing:	8.75	ft
Flange width:	20	in
Panel width:	8	ft
Number of girders:	6	ea
Max overall width of panels:	126.4	ft

(max distance between square ends of panels and 12"x12" fillets on bottom of deck at backwall)

Panel width:	7.75	ft	
Number of panels per bay:	15	ea	
	-4	ea	(subtract 4 from the corners)
Overall length of panels:	120	ft	

(ends are cast in place, accounted for in HPCA)

Total

4402.0 SF **SAY** **4402.0 SF**

NORTHBOUND

900.670 SPECIAL PROVISION (PRECAST PRESTRESSED CONCRETE DECK PANEL)(3 1/2")

Calc By: WDL 11/4/2014
Check By:

LEVEL 25

Width of panel over flange:	4	in
Girder spacing:	8.5	ft
Flange width:	20	in
Panel width:	8	ft
Number of girders:	6	ea
Max overall width of panels:	126.66	ft

(max distance between square ends of panels and 12"x12" fillets on bottom of deck at backwall)

Panel length:	7.5	ft	
Number of panels:	15	ea	
	-4	ea	(subtract 4 from the corners)
Overall width of panels:	120	ft	

(ends are cast in place, accounted for in HPCA)

Total

4260.0 SF **SAY** **4260.0 SF**

501.33 CONCRETE, HIGH PERFORMANCE, CLASS A

LEVEL 45 See s12a132qnt_bridge_superstructures.dgn

Calc By: WDL 11/5/2014
Check By:

Plan area between ext. girders, backwalls, and SIP forms	1330.20	sf
Plan area of overhangs between suspended backwalls	594.55	sf
Interior Deck Thickness	9	in
Overhang Thickness	10	in
Plan area of SIP panels (total)	4260	sf
Cast in place depth over SIP panels	5.5	in
Suspended backwall cross sectional area	13.4	sf
Length of suspended backwall	49.57	ft
Number of suspended backwalls	2	ea

Deck Between Suspended Backwalls (including overhangs, excluding over SIP panels):

Subtotal: 55.3003086 cy

Deck over SIP panels:

Subtotal: 72.3148148 cy

Suspended Backwalls:

Subtotal: 49.2028148 cy

Total

176.8179 cy **SAY** **176.82 CY**

506.50 STRUCTURAL STEEL, ROLLED BEAM (W30x90 DIAPHRAGM)

LEVEL 47 Also, see s12a132fra43N.dgn

Calc By: RMK 6/27/2014
Check By:

CL Bearing diaphragm length	8.05	ft
Intermediate diaphragm length	8.71	ft
Number of diaphragms at CL Bearing	10	ea
Number of intermediate diaphragms	35	ea
Weight per foot	90	plf

Total

34681.5 lb **SAY** **34682 LB**

506.55 STRUCTURAL STEEL, PLATE GIRDER

LEVEL 47 Also, see s12a132fra43N.dgn

Calc By: RMK 6/27/2014
Check By: GML 6/30/2014
Final Check WDL 11/3/2014

Bottom flange paid for under item 900.635, Special Provision (Structural Steel, Plate Girder, Grade HPS 70W)

Weight of Steel	490	pcf
Number of girders	6	ea
Top flange thickness	1.25	in
Top flange width	20	in
Web thickness	0.625	in

Web height	38	in
Girder length (overall)	133.32	ft
Bearing stiffener thickness	1	in
Bearing stiffener width	9	in
Number of bearing stiffeners	48	ea
Connection plate thickness	0.5	in
Connection plate width	5	in
Number of connection plates	70	ea

Girders:

Subtotal: 132695.063 lb

Bearing Stiffeners and Connection Plates:

Subtotal: 6540.70602 lb

Total

139235.8 lb **SAY** **136910 LB**

509.10 LONGITUDINAL DECK GROOVING

Calc By: WDL 11/4/2014
Check By:

LEVEL 41

5900 sf

Total

655.5556 sy **SAY** **656 SY**

900.670 SPECIAL PROVISION (PRECAST PRESTRESSED CONCRETE DECK PANEL)(3 1/2")

Calc By: WDL 11/4/2014
Check By:

LEVEL 25

Width of panel over flange:	4	in
Girder spacing:	8.5	ft

Flange width:	20	in	
Panel width:	8	ft	
Number of girders:	6	ea	
Max overall width of panels:	126.66	ft	
(max distance between square ends of panels and 12"x12" fillets on bottom of deck at backwall)			
Panel length:	7.5	ft	
Number of panels:	15	ea	
	-4	ea	(subtract 4 from the cc
Overall width of panels:	120	ft	
(ends are cast in place, accounted for in HPCA)			

Total

4260.0 SF	**SAY**	**4260.0 SF**	

Changed this area to reflect removal of deck panels at 4 corners

Changed this area to reflect removal of deck panesl at 4 corners

Changed CL Bearing diaphragm length

Added 24 bearing stiffeners for temp slide

›rners)

501.33 CONCRETE, HIGH PERFORMANCE, CLASS A

LEVEL 45 See s12a132qnt_bridge_superstructures.dgn

Calc By: WDL 11/5/2014
Check By:

Plan area between ext. girders, backwalls, and SIP forms	1352.63	sf
Plan area of overhangs between suspended backwalls	689	sf
Interior Deck Thickness	9	in
Overhang Thickness	10	in
Plan area of SIP panels (total)	4402	sf
Cast in place depth over SIP panels	5.5	in
Suspended backwall cross sectional area	15.57	sf
Length of suspended backwall	51.66	ft
Number of suspended backwalls	2	ea

Deck Between Suspended Backwalls (including overhangs, excluding over SIP panels):

Subtotal: 58.83848765 cy

Deck over SIP panels:

Subtotal: 74.72530864 cy

Suspended Backwalls:

Subtotal: 59.5812 cy

Total

193.145 cy **SAY** **193.14 CY**

506.55 STRUCTURAL STEEL, PLATE GIRDER

LEVEL 47 Also, see s12a132fra43S.dgn

Calc By: RMK 6/23/2014
Final Check: WDL 11/3/2014

Weight of Steel	490	pcf
Number of girders	6	ea
Top flange thickness	1	in
Top flange width	20	in
Web thickness	0.625	in
Web height	50	in
Bottom flange thickness	1.5	in

Bottom flange width	20	in
Girder length (overall)	133.32	ft
Bearing stiffener thickness	1	in
Bearing stiffener width	9	in
Number of bearing stiffeners	48	ea
Connection plate thickness	0.5	in
Connection plate width	5	in
Number of connection plates	50	ea

Girders:

Subtotal: 221158.4375 lb

Bearing Stiffeners and Connection Plates:

Subtotal: 7897.280093 lb

Total

229055.7 lb **SAY** **226000** **LB**

509.10 LONGITUDINAL DECK GROOVING

Calc By: WDL 11/4/2014
Check By:

LEVEL 41

6170 sf

Total

685.5556 sy **SAY** **686 SY**

900.670 SPECIAL PROVISION (PRECAST PRESTRESSED CONCRETE DECK PANEL)(3 1/2")

Calc By: WDL 11/4/2014
Check By:

LEVEL 25

Width of panel over flange:	4	in
Girder spacing:	8.75	ft
Flange width:	20	in
Panel width:	8	ft
Number of girders:	6	ea
Max overall width of panels:	126.4	ft

(max distance between square ends of panels and 12"x12" fillets on bottom of deck at backwall)

Panel width:	7.75	ft	
Number of panels per bay:	15	ea	
	-4	ea	(subtract 4 from the co
Overall length of panels:	120	ft	

(ends are cast in place, accounted for in HPCA)

Total

4402.0 SF **SAY** **4402.0 SF**

Changed this area to reflect removal of deck panels at 4 corners

Changed this area to reflect removal of deck panesl at 4 corners

›rners)

By: JTS 6-26-2014
Final Re-Check: WDL 11/6/2014
Ck'd by: WDL 7/1/2014

609.10 DUST CONTROL WITH WATER **Say** **280.00** **MGAL**

Road	Length	
SB	550	
NB	525	
US5	1000	

BASED ON 1660 M3/KM
PER 1998 ROAD DESIGN MANUAL

	2075	LF
x	134	GAL/FT
	278050	GAL
÷	1000	GAL/MGAL
	278.05	MGAL

609.15 DUST AND ICE CONTROL WITH CALCIUM CHLORIDE **Say** **2.00** **Ton**

Road	Length
SB	550
NB	525
US5	1000

BASED ON 2.8 METRIC TONS/KM
PER 1998 ROAD DESIGN MANUAL

	2075	LF
÷	5280	LF/MILE
	0.392992	MILES
x	3.086472	TONS/MILE
	1.21296	TONS

649.51 GEOTEXTILE FOR SILT FENCE **Say** **1600.00** **SY**

	3453.72	LF
x	4	FT
	13814.88	SF
÷	9	SF/SY
TOTAL	1534.987	SY

649.61 GEOTEXTILE FOR FILTER CURTAIN **Say** **0.00** **SY**

	0	LF
x	4	FT
	0	SF
÷	9	SF/SY
TOTAL	0	SY

651.15	**SEED**	**Say**	**105.00**	**LB**

Area measured in 12a132qnt_epsc.dgn

	74543.88	SF
÷	43560	SF/ACRE
	1.711292	
x	60	LB/ACRE
	102.6775	LB

~~**651.17**~~	~~**SEED, WINTER RYE**~~	~~**Est**~~	~~**20.00**~~	~~**LB**~~

Area measured in 12a132qnt_epsc.dgn

	0	SF
÷	43560	SF/ACRE
	0	
x	60	LB/ACRE
	0	LB

651.18	**FERTILIZER**	**Say**	**860.00**	**LB**

Area measured in 12a132qnt_epsc.dgn

	74543.88	SF
÷	43560	SF/ACRE
	1.711292	ACRE
x	500	LB/ACRE
	855.646	LB

651.2	**AGRICULTURAL LIMESTONE**	**Say**	**4.00**	**TON**

Area measured in 12a132qnt_epsc.dgn

	74543.88	SF
÷	43560	SF/ACRE
	1.711292	ACRE
x	2	TON/ACRE
	3.422584	TON

651.25	**HAY MULCH**	**Say**	**4.00**	**TON**

Area measured in 12a132qnt_epsc.dgn

	74543.88	SF
÷	43560	SF/ACRE
	1.711292	ACRE
x	2	TON/ACRE
	3.422584	TON

By: JTS 6-26-2014
Final Re-Check: WDL 11/6/2014
Ck'd by: WDL 7/1/2014

651.35	**TOP SOIL**	**Say**	**930.00**	**CY**

Area measured in 12a132qnt_epsc.dgn

	75875.6	SF
x	0.33	FT THICK
	25038.95	CF
÷	27	CF/CY
	927.3684	CY

652.1	**EPSC PLAN**		**1.00**	**LS**
652.2	**MONITORING EPSC PLAN**	**Est**	~~**100.00**~~ 200 HR	**HR**
652.3	**MAINTENANCE OF EPSC PLAN (NABI)**		**1.00**	**LU**

Revised based on discussion w PCL during 60% evaluation

653.2	**TEMPORARY EROSION MATTING**	**Say**	~~**1600**~~ 1425 sf	**SY**

Area measured in 12a132qnt_epsc.dgn

	12827 sf	
	~~14272.24~~	SF
÷	9	SF/SY
	~~1585.804~~	SY
	1425 sf	

653.25	**TEMPORARY STONE CHECK DAM, TYPE I**	**Est**	**20.00**	**CY**
653.35	**VEHICLE TRACKING PAD**	**Est**	**200.00**	**CY**
653.40	**INLET PROTECTION DEVICE, TYPE I**	**Say**	**11.00**	**EA**
653.50	**BARRIER FENCE**	**Say**	**3925.00**	**LF**

Area measured in 12a132qnt_epsc.dgn 3920.974 LF

Final Re-Check: WDL 11/6/2014 CHK: WDL 7/2/2014

203.28 Excavation of Surfaces and Pavements **SAY** **300.00 CY**

See level 21 s12a132qnt_roadway_US 5.dgn

Area (SF)	Thickness	Vol (CF)	
12130.84	0.666667	8087.23	
		8087.23	CF
		27.00	CF/CY
		299.53	**CY**

675.50 Removing Signs **SAY** **3.00 EA**

Google Earth Street view used to quantify

3 Signs (One merge symbol and two yield's)

676.12 Removal of Existing Delineator **SAY** **6.00 EA**

Google Earth Street view used to quantify

6 Delineators

621.90 Temporary Traffic Barrier **Say** **1310** **LF**

Measured in s12a132detour91.dgn *1307.15 LF*

641.10 Traffic Control (NB) **Say** **1.00 LS**

Items included:

Traffic Signs, Type A	**288**	**SF**
Square Tube Sign Post and Anchor	***540***	***LF***
Temporary 6 Inch White Line	**1700**	**LF**
Temporary 6 Inch Yellow Line	**1350**	**LF**
Pavement Marking Mask	**900**	**SF**
Temporary Pavement	**110**	**TON**
Subbase of Dense Graded Crushed Stone	**225**	**CY**
GRANITE SLOPED EDGING	**370**	**LF**
Delineator with Steel Post	**5**	**EA**
Removal of Existing Delineator	**5**	**EA**

Traffic Signs, Type A

See Standard T-11 for Construction Approach Signs

	Inches	Inches	SF	Each	SF
W20-1	48	48	16	2	32
W3-5	48	48	16	2	32
W20-5L	48	48	16	4	64
VR-355	48	48	16.00	2	32
W4-2	48	48	16.00	2	32
W13-1P	48	48	16	2	32
G20-SAP	30	30	6.25	2	12.5
R2-1	36	48	12.00	2	24

Sub Total ***224*** **SF**

NOTE: ***W20-5, W4-2 AND W13-1P WILL BE COVERED AND ONLY USED FOR LANE SHIFTS ETC***

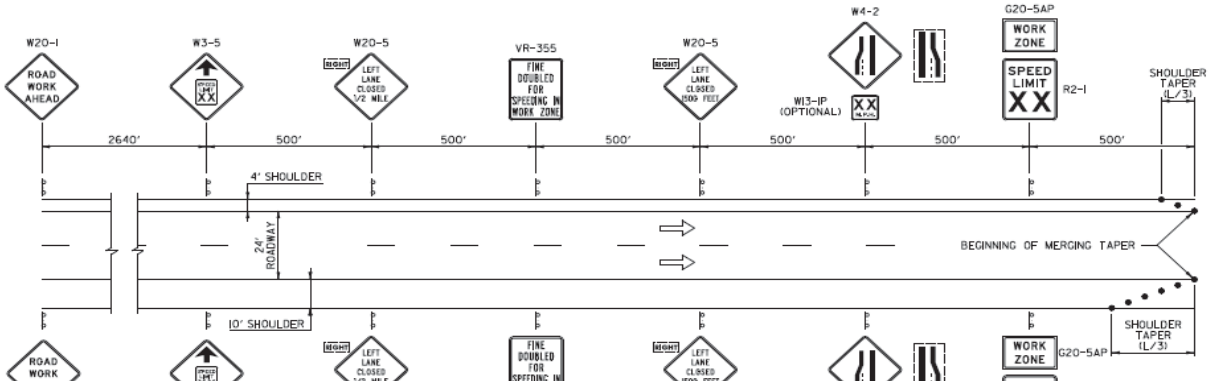

CLOSURE APPROACH SIGNS

See Standard T-20

	Inches	Inches	SF	Each	SF
W20-3	48	48	16	4	64
W20-5L	48	48	16	0	0
W9-1	48	48	16	0	0
W4-2	48	48	16.00	0	0
W13-1P	0	0	0.00	0	0

Sub Total ***64*** **SF**

NOTE: ***W20-5L, W4-2 AND W13-1P WILL ALL READY BY IN PLACE WITH APPROACH SIGNAGE***

W9-1 IS OPTIONALAND THERE WILL ALL READY BE A LANE CLOSED (1500 FT)

Total ***288*** ***SF***

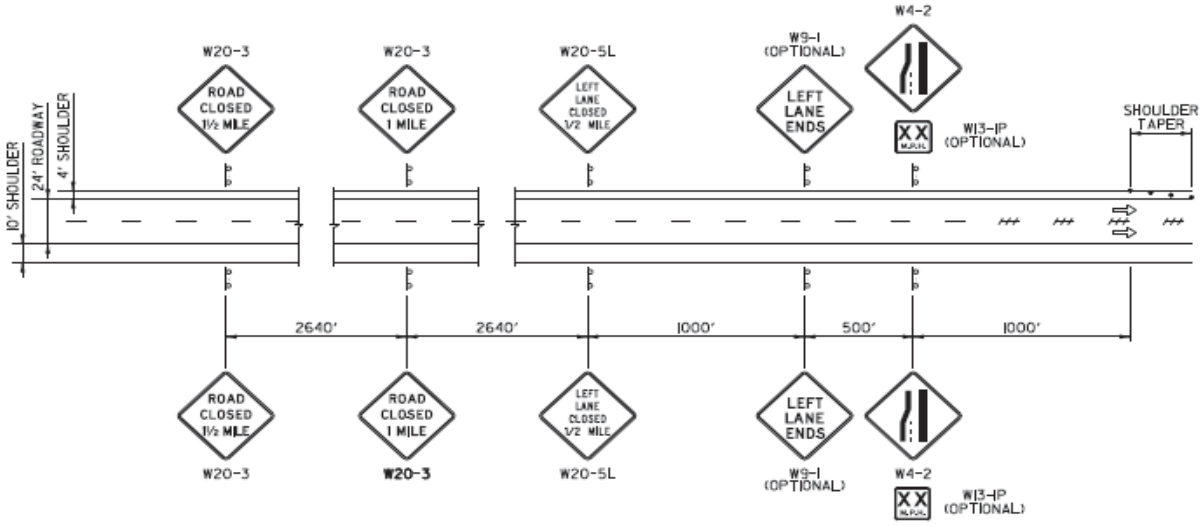

Square Tube Sign Post and Anchor

CONSTRUCTION APPROACH SIGNS

	EA	Posts	Length		
Sign Assembly	14	2	15	420	
			Sub Total	***420***	***LF***

CLOSURE APPROACH SIGNS

	EA	Posts	Length		
Sign Assembly	4	2	15	120	
			Sub Total	***120***	***LF***
			Total	***540***	***LF***

TRAFFIC CHANNELIZING DEVICE

Measured in s12a132detour91.dgn *254.16 LF*

646.621 TEMPORARY 6 INCH WHITE LINE, TYPE II TAPE **1700** **LF**

		LENGTH	FACTOR	
Measured in s12a132detour91.dgn	SOLID	*1246.04*	*1*	1246.04
	DASHED	*1441.18*	0.25	360.295
	DOTTED	*211.18*	0.33	69.6894
			TOTAL	1676.024

646.631 TEMPORARY 6 INCH YELLOW LINE, TYPE II TAPE **1350** **LF**

Measured in s12a132detour91.dgn *1340.96 LF*

646.86 PAVEMENT MARKING MASK **2700/3** **SF**

Measured in s12a132detour91.dgn *2633.16 LF*

TEMPORARY PAVEMENT **SAY 110 TON**

RAMP C	AREA #1	112.35	SF	
	AREA #2	1784.97	SF	
	AREA #3	1676.69	SF	
		3574.01	SF	
		0.167	FT	(2" BCP)
		596.8597	CF	
		27	CF/CY	
		22.10591	CY	
		2	TON/CY	
		44.21183	TON	
RAMP D	AREA #1	1872.22	SF	
	AREA #2	1899.5	SF	
	AREA #3	318.11	SF	
	AREA #4	947.23	SF	
		5037.06	SF	
		0.167	FT	(2" BCP)
		841.189	CF	
		27	CF/CY	
		31.15515	CY	
		2	TON/CY	
		62.3103	TON	
	TOTAL	106.5221	TON	

COMMON EXCAVATION **SAY** **250** **CY**

LEFT SHOULDER

STA	DIST (LF)	AREA (SF)	AVG (SF)	VOL (CF)
2104		3.71		
	96		3.71	356.16
2200		3.71		
	100		3.845	384.5
2300		3.98		
	100		3.89	389
2400		3.8		
	100		4.105	410.5
2500		4.41		
	100		5.8	580
2600		7.19		
	100		7.085	708.5
2700		6.98		
	80		6.98	558.4
2780		6.98		

SUB TOTAL 3387.06 CF

RIGHT SHOULDER

STA	DIST (LF)	AREA (SF)	AVG (SF)	VOL (CF)
2133		5.1		
	67		5.1	341.7
2200		5.1		
	100		4.865	486.5
2300		4.63		
	100		4.955	495.5
2400		5.28		
	100		6.065	606.5
2500		6.85		
	100		4.8	480
2600		2.75		
	100		2.74	274
2700		2.73		
	100		2.78	278
2800		2.83		
	100		2.83	283
2900		2.83		
	63		2.83	178.29
2963		2.83		

SUB TOTAL 3423.49

TOTAL 6810.55

27

252.2426

SUBBASE OF DENSE GRADED CRUSHED STONE **SAY** **225** **CY**

LEFT SHOULDER

STA	DIST (LF)	AREA (SF)	AVG (SF)	VOL (CF)
2104		3.49		
	96		3.49	335.04
2200		3.49		
	100		3.79	379
2300		4.09		

RIGHT SHOULDER

STA	DIST (LF)	AREA (SF)	AVG (SF)	VOL (CF)
2133		4.06		
	67		4.06	272.02
2200		4.06		
	100		4.06	406
2300		4.06		

	100		3.765	376.5		100		4.715	471.5
2400		3.44			2400		5.37		
	100		3.595	359.5		100		5.815	581.5
2500		3.75			2500		6.26		
	100		5	500		100		4.38	438
2600		6.25			2600		2.5		
	100		6.25	625		100		2.5	250
2700		6.25			2700		2.5		
	80		6.25	500		100		2.5	250
2780		6.25			2800		2.5		
						100		2.5	250
					2900		2.5		
						63		2.5	157.5
					2963		2.5		
			SUB TOTAL	3075.04 CF				SUB TOTAL	3076.52

TOTAL 6151.56

27

227.8356

GRANITE SLOPED EDGING **SAY** **370** **LF**

STA 21+33 TO 25+02 = 369 LF

DELINEATOR WITH STEEL POST **5 EA**

REMOVAL OF EXISTING DELINEATOR **5 EA**

Type III Barricades	**7**	**EA**
Reflectorized Drums	**50**	**EA**
Traffic Channelizing Device	**260**	**LF**

641.15	**Portable Changeable Message Sign**	**2**	**EA**
641.16	**Portable Arrow Board**	**1**	**EA**

CF

CF

CF/CY

CY

CF

CF

CF/CY

CY

507.19 Mechanical Bar Connector **198 EA**

AB#1	
1A505.3	11
1A506.3	11
1W505.3	27
SUB TOTAL	49
AB#2	
2A505.3	10
2A506.3	10
3W505.3	28
SUB TOTAL	48
AB#3	
3A505.3	13
3A506.3	13
6W505.3	28
SUB TOTAL	54
AB#4	
4A505.3	10
4A506.3	10
8W505.3	27
SUB TOTAL	47
TOTAL	198

CALCULATED BY: GML 11/25/2014 SUMMARY HartfordIM091-2(79)
CHECKED BY: WDL 12/5/14 MICROPILE QUANTITY 12a132

NOTE:
1. THIS QUANTITY IS BASED ON AN INTERPOLATED BEDROCK SURFACE FROM THE BORING LOGS
2. THE VERTICAL PILE PLUNGE LENGTH - 1' IS ONLY FOR SEATING THE PILE INTO COMPETENT BEDROCK
3. THE REAR VERTICAL PILES DO NOT NEED TO BE OVERBOARED TO PROVIDE A LARGER BORE HOLE AS THE BATTERED PILES DO.
4. IT'S REASONABLE TO ASSUME 1 FOOT OF NON COMPETENT ROCK PER PILE

ABUTMENT 1:

VERTICAL			
	SUBTOTAL CASED LENGTH	265.35	LF
	SUBTOTAL UNCASED LENGTH	60.00	LF
BATTERED			
	SUBTOTAL CASED LENGTH	350.68	LF
	SUBTOTAL UNCASED LENGTH	70.00	LF

ABUTMENT 2:

VERTICAL			
	SUBTOTAL CASED LENGTH	139.45	LF
	SUBTOTAL UNCASED LENGTH	50.00	LF
BATTERED			
	SUBTOTAL CASED LENGTH	200.72	LF
	SUBTOTAL UNCASED LENGTH	55.00	LF

ABUTMENT 3:

VERTICAL			
	SUBTOTAL CASED LENGTH	193.04	LF
	SUBTOTAL UNCASED LENGTH	45.00	LF
BATTERED			
	SUBTOTAL CASED LENGTH	255.99	LF
	SUBTOTAL UNCASED LENGTH	50.00	LF

TOTAL CASED LENGTH	**1405.23**	**SAY**	**1410**	**LF**
TOTAL UNCASED LENGTH	**330.00**	**SAY**	**330**	**LF**

CALCULATED BY: GML 11/25/2014 SB ABUTMENT 1 HartfordIM091-2(79)
CHECKED BY: WDL 12/5/14 MICROPILE LENGTHS 12a132

VERTICAL MICROPILES:

PILE #	FT		IN				VERTICAL LENGTH (FT)	CASING PLUNGE LENGTH (FT)	NON COMP. ROCK (FT)	UNCASED LEGNTH (FT)
1	23	-	10	13	/	16	23.90	1	1	5
2	21	-	3	15	/	16	21.33	1	1	5
3	21	-	8	13	/	16	21.73	1	1	5
4	22	-	1	13	/	16	22.15	1	1	5
5	21	-	5	1	/	4	21.44	1	1	5
6	20	-	4	5	/	16	20.36	1	1	5
7	19	-	3	3	/	8	19.28	1	1	5
8	17	-	4	3	/	8	17.36	1	1	5
9	17	-	7	5	/	8	17.64	1	1	5
10	18	-	2	1	/	8	18.18	1	1	5
11	18	-	8	5	/	8	18.72	1	1	5
12	19	-	3	1	/	8	19.26	1	1	5
				SUBTOTALS			241.35	12.00	12.00	60.00

SUBTOTAL CASED LENGTH **265.35** **LF**

SUBTOTAL UNCASED LENGTH **60** **LF**

CALCULATED BY: GML 11/25/2014 SB ABUTMENT 1 HartfordIM091-2(79)
CHECKED BY: WDL 12/5/14 MICROPILE LENGTHS 12a132

BATTERED MICROPILES:

BATTER	RUN	RISE	ANGLE (RAD)	ANGLE (DEG)
	1	4	0.24	14.036

PILE #	FT		IN				VERTICAL LENGTH (FT)	BATTERED LENGTH (FT)	CASING PLUNGE LENGTH (FT)	NON COMP. ROCK (FT)	UNCASED LEGNTH (FT)
13	22	-	5	7	/	8	22.49	23.18	3	1	5
14	23	-	8	7	/	8	23.74	24.47	3	1	5
15	22	-	10	3	/	16	22.85	23.55	3	1	5
16	21	-	6	5	/	16	21.53	22.19	3	1	5
17	21	-	11	5	/	16	21.94	22.62	3	1	5
18	21	-	11	11	/	16	21.97	22.65	3	1	5
19	20	-	10	3	/	4	20.90	21.54	3	1	5
20	19	-	9	13	/	16	19.82	20.43	3	1	5
21	18	-	4	7	/	8	18.41	18.97	3	1	5
22	17	-	4	3	/	8	17.36	17.90	3	1	5
23	17	-	10	7	/	8	17.91	18.46	3	1	5
24	18	-	5	3	/	8	18.45	19.02	3	1	5
25	18	-	11	7	/	8	18.99	19.57	3	1	5
26	19	-	6	3	/	8	19.53	20.13	3	1	5
				SUBTOTAL				294.68	42	14	70

SUBTOTAL CASED LENGTH **350.68** **LF**

SUBTOTAL UNCASED LENGTH **70** **LF**

CALCULATED BY: GML 11/25/2014 SB ABUTMENT 2 HartfordIM091-2(79)
CHECKED BY: WDL 12/5/14 MICROPILE LENGTHS 12a132

VERTICAL MICROPILES:

PILE #	FT		IN				VERTICAL LENGTH (FT)	CASING PLUNGE LENGTH (FT)	NON COMP. ROCK (FT)	UNCASED LEGNTH (FT)
27	13	-	3	3	/	4	13.31	1	1	5
28	12	-	10	3	/	16	12.85	1	1	5
29	12	-	5	15	/	16	12.49	1	1	5
30	12	-	3	7	/	16	12.29	1	1	5
31	12	-	1	0	/	16	12.08	1	1	5
32	11	-	10	1	/	2	11.88	1	1	5
33	11	-	11	13	/	16	11.98	1	1	5
34	12	-	11	3	/	16	12.93	1	1	5
35	10	-	10	1	/	4	10.85	1	1	5
36	8	-	9	3	/	8	8.78	1	1	5
				SUBTOTALS			119.45	10	10	50

SUBTOTAL CASED LENGTH **139.45** **LF**

SUBTOTAL UNCASED LENGTH **50** **LF**

CALCULATED BY: GML 11/25/2014 SB ABUTMENT 2 HartfordIM091-2(79)
CHECKED BY: WDL 12/5/14 MICROPILE LENGTHS 12a132

BATTERED MICROPILES:

BATTER	RUN	RISE	ANGLE (RAD)	ANGLE (DEG)
	1	4	0.245	14

PILE #	FT		IN				VERTICAL LENGTH (FT)	BATTERED LENGTH (FT)	CASING PLUNGE LENGTH (FT)	NON COMP. ROCK (FT)	UNCASED LEGNTH (FT)
37	13	-	7	1	/	4	13.60	14.02	4.5	1	5
38	13	-	10	7	/	8	13.91	14.33	4.5	1	5
39	13	-	4	3	/	8	13.36	13.78	4.5	1	5
40	12	-	7	1	/	8	12.59	12.98	4.5	1	5
41	12	-	4	11	/	16	12.39	12.77	4.5	1	5
42	12	-	2	3	/	16	12.18	12.56	4.5	1	5
43	11	-	11	3	/	4	11.98	12.35	4.5	1	5
44	11	-	9	1	/	4	11.77	12.13	4.5	1	5
45	12	-	6	5	/	16	12.53	12.91	4.5	1	5
46	11	-	10	3	/	4	11.90	12.26	4.5	1	5
47	9	-	9	13	/	16	9.82	10.12	4.5	1	5
							SUBTOTAL	140.22	49.5	11	55

SUBTOTAL CASED LENGTH	**200.72**	**LF**
SUBTOTAL UNCASED LENGTH	**55**	**LF**

CALCULATED BY: GML 11/25/2014 NB ABUTMENT 1 HartfordIM091-2(79)
CHECKED BY: WDL 12/5/14 MICROPILE LENGTHS 12a132

VERTICAL MICROPILES:

PILE #	FT		IN				VERTICAL LENGTH (FT)	CASING PLUNGE LENGTH (FT)	NON COMP. ROCK (FT)	UNCASED LEGNTH (FT)
48	24	-	1	7	/	16	24.12	1	1	5
49	24	-	1	5	/	16	24.11	1	1	5
50	19	-	0	1	/	4	19.02	1	1	5
51	15	-	1	3	/	8	15.11	1	1	5
52	19	-	1	5	/	8	19.14	1	1	5
53	18	-	9	7	/	16	18.79	1	1	5
54	15	-	11	1	/	2	15.96	1	1	5
55	17	-	11	11	/	16	17.97	1	1	5
56	20	-	9	13	/	16	20.82	1	1	5
				SUBTOTALS			175.04	9	9	45

SUBTOTAL CASED LENGTH **193.04** **LF**

SUBTOTAL UNCASED LENGTH **45** **LF**

CALCULATED BY: GML 11/25/2014 NB ABUTMENT 1 HartfordIM091-2(79)
CHECKED BY: WDL 12/5/14 MICROPILE LENGTHS 12a132

BATTERED MICROPILES:

BATTER	RUN	RISE	ANGLE (RAD)	ANGLE (DEG)
	1	4	0.2	14

PILE #	FT		IN				VERTICAL LENGTH (FT)	BATTERED LENGTH (FT)	CASING PLUNGE LENGTH (FT)	NON COMP. ROCK (FT)	UNCASED LEGNTH (FT)
57	24	-	1	5	/	8	24.14	24.88	4	1	5
58	24	-	1	1	/	2	24.13	24.87	4	1	5
59	24	-	1	3	/	8	24.11	24.86	4	1	5
60	20	-	11	11	/	16	20.97	21.62	4	1	5
61	17	-	0	13	/	16	17.07	17.59	4	1	5
62	16	-	10	0	/	16	16.83	17.35	4	1	5
63	19	-	9	7	/	16	19.79	20.40	4	1	5
64	17	-	9	1	/	2	17.79	18.34	4	1	5
65	15	-	7	7	/	16	15.62	16.10	4	1	5
66	19	-	4	3	/	4	19.40	19.99	4	1	5
						SUBTOTAL		205.99	40	10	50

SUBTOTAL CASED LENGTH	**255.99**	**LF**
SUBTOTAL UNCASED LENGTH	**50**	**LF**

VALUES USED IN COMPUTATIONS BELOW

UNIT WEIGHT CONCRETE	-	150	PCF
CONVERSION CF TO CY	-	27	CF / CY

WEIGHT AND VOLUME CALCULATED FROM PLAN VIEW AREAS:

CHEEK WALL AREA FROM FASCIA - TOP OF WW TAPER

WW5 - TOP OF PILE CAP TO BRIDGE SEAT

	AREA (SF)	ELEV BOT (FT)	ELEV BS (FT)	ELEV TOP (FT)		WEIGHT (LB)	VOLUME (CY)
BELOW BS	13.63	551.90	568.65			34,245.38	8.46
ABOVE BS	11.73		568.65	572.70		7,125.98	1.76
				SUBTOTAL	-	41,371.35	10.22

WW6 - TOP OF PILE CAP TO BRIDGE SEAT

	AREA (SF)	ELEV BOT (FT)	ELEV BS (FT)	ELEV TOP (FT)		WEIGHT (LB)	VOLUME (CY)
BELOW BS	28.74	551.90	566.38			62,423.28	15.41
ABOVE BS	27.1		566.38	572		22,845.30	5.64
				SUBTOTAL	-	85,268.58	21.05

SPREAD FOOTING ON PILES:

	AREA (SF)	ELEV BOT (FT)	ELEV TOP (FT)			WEIGHT (LB)	VOLUME (CY)
ABUT 3	808.53	548.9	551.9			363,838.50	89.84
				SUBTOTAL	-	363,838.50	89.84

WEIGHT AND VOLUME CALCULATED FROM ELEVATION VIEW AREAS:

	AREA (SF)	THICK (FT)	WEIGHT (LB)	VOLUME (CY)
FASCIA WW6				
- ABUT CORNER	958.72	3	431,424.00	106.52
WW5	104	3	46,800.00	11.56
WW6	121.06	3	54,477.00	13.45
		SUBTOTAL -	532,701.00	131.53

ABUTMENT 3: TOTAL WEIGHT AND VOLUME CALCULATED:

		WEIGHT (LB)	VOLUME (CY)
TOTAL	**-**	**1,023,179.43**	**252.64**

VALUES USED IN COMPUTATIONS BELOW

UNIT WEIGHT CONCRETE	-	150	PCF
CONVERSION CF TO CY	-	27	CF / CY

WEIGHT AND VOLUME CALCULATED FROM PLAN VIEW AREAS:

CHEEK WALL AREA FROM FASCIA - TOP OF WW TAPER

WW7 - TOP OF PILE CAP TO BRIDGE SEAT

	AREA (SF)	ELEV BOT (FT)	ELEV BS (FT)	ELEV TOP (FT)		WEIGHT (LB)	VOLUME (CY)
BELOW BS	10.46	548.00	567.81			31,081.89	7.67
ABOVE BS	8.59		567.81	572.00		5,398.82	1.33
				SUBTOTAL	-	36,480.71	9.01

WW8 - TOP OF PILE CAP TO BRIDGE SEAT

	AREA (SF)	ELEV BOT (FT)	ELEV BS (FT)	ELEV TOP (FT)		WEIGHT (LB)	VOLUME (CY)
BELOW BS	27.26	548	565.47			71,434.83	17.64
ABOVE BS	25.85		565.47	571		21,442.57	5.29
				SUBTOTAL	-	92,877.41	22.93

SPREAD FOOTING:

	AREA (SF)	ELEV BOT (FT)	ELEV TOP (FT)			WEIGHT (LB)	VOLUME (CY)
ABUT 4	658.68	545	548			296,406.00	73.19
				SUBTOTAL	-	296,406.00	73.19

WEIGHT AND VOLUME CALCULATED FROM ELEVATION VIEW AREAS:

	AREA (SF)	THICK (FT)	WEIGHT (LB)	VOLUME (CY)
FASCIA WW8 - ABUT				
CORNER	1142.32	3	514,044.00	126.92
WW7	120	3	54,000.00	13.33
WW8	151.2	3	68,040.00	16.80
		SUBTOTAL -	636,084.00	157.06

ABUTMENT 3: TOTAL WEIGHT AND VOLUME CALCULATED:

		WEIGHT (LB)	VOLUME (CY)
TOTAL	**-**	**1,061,848.11**	**262.18**

VALUES USED IN COMPUTATIONS BELOW

UNIT WEIGHT CONCRETE	-	150	PCF
CONVERSION CF TO CY	-	27	CF / CY

WEIGHT AND VOLUME CALCULATED FROM PLAN VIEW AREAS:

CHEEK WALL AREA FROM FASCIA - TOP OF WW TAPER

WW1 - TOP OF PILE CAP TO BRIDGE SEAT

	AREA (SF)	ELEV BOT (FT)	ELEV BS (FT)	ELEV TOP (FT)		WEIGHT (LB)	VOLUME (CY)
BELOW BS	21.6	549.9	570.81			67,748.40	16.73
ABOVE BS	21.6		570.81	577.5		21,675.60	5.35
				SUBTOTAL	-	89,424.00	22.08

WW2 - TOP OF PILE CAP TO BRIDGE SEAT

	AREA (SF)	ELEV BOT (FT)	ELEV BS (FT)	ELEV TOP (FT)		WEIGHT (LB)	VOLUME (CY)
BELOW BS	10.71	549.9	568.58			30,009.42	7.41
ABOVE BS	8.81		568.58	573.4		6,369.63	1.57
				SUBTOTAL	-	36,379.05	8.98

SPREAD FOOTING ON PILES:

	AREA (SF)	ELEV BOT (FT)	ELEV TOP (FT)			WEIGHT (LB)	VOLUME (CY)
ABUT 1	807.41	546.9	549.9			363,334.50	89.71
				SUBTOTAL	-	363,334.50	89.71

WEIGHT AND VOLUME CALCULATED FROM ELEVATION VIEW AREAS:

	AREA (SF)	THICK (FT)	WEIGHT (LB)	VOLUME (CY)
WW1 FASCIA - ABUT CORNER	1228.6	3	552,870.00	136.51
WW1	183.05	3	82,372.50	20.34
WW2	117.5	3	52,875.00	13.06
		SUBTOTAL -	688,117.50	169.91

ABUTMENT 1: TOTAL WEIGHT AND VOLUME CALCULATED:

	WEIGHT (LB)	VOLUME (CY)
TOTAL -	**1,177,255.05**	**290.68**

VALUES USED IN COMPUTATIONS BELOW

UNIT WEIGHT CONCRETE	-	150	PCF
CONVERSION CF TO CY	-	27	CF / CY

WEIGHT AND VOLUME CALCULATED FROM PLAN VIEW AREAS:

CHEEK WALL AREA FROM FASCIA - TOP OF WW TAPER

WW3 - TOP OF PILE CAP TO BRIDGE SEAT

	AREA (SF)	ELEV BOT (FT)	ELEV BS (FT)	ELEV TOP (FT)		WEIGHT (LB)	VOLUME (CY)
BELOW BS	20.75	550.5	571.11			64,148.63	15.84
ABOVE BS	19.11		571.11	577.8		19,176.88	4.74
				SUBTOTAL	-	83,325.51	20.57

WW4 - TOP OF PILE CAP TO BRIDGE SEAT

	AREA (SF)	ELEV BOT (FT)	ELEV BS (FT)	ELEV TOP (FT)		WEIGHT (LB)	VOLUME (CY)
BELOW BS	7.82	550.5	568.87			21,548.01	5.32
ABOVE BS	5.96		568.87	573.9		4,496.82	1.11
				SUBTOTAL	-	26,044.83	6.43

SPREAD FOOTING ON PILES:

	AREA (SF)	ELEV BOT (FT)	ELEV TOP (FT)			WEIGHT (LB)	VOLUME (CY)
ABUT 2	809.4	547.5	550.5			364,230.00	89.93
				SUBTOTAL	-	364,230.00	89.93

WEIGHT AND VOLUME CALCULATED FROM ELEVATION VIEW AREAS:

	AREA (SF)	THICK (FT)	WEIGHT (LB)	VOLUME (CY)
WW3 FASCIA - ABUTMENT	1223.42	3	550,539.00	135.94
WW3	175.7	3	79,065.00	19.52
WW4	163.8	3	73,710.00	18.20
		SUBTOTAL -	703,314.00	173.66

ABUTMENT 2: TOTAL WEIGHT AND VOLUME CALCULATED:

		WEIGHT (LB)	VOLUME (CY)
TOTAL	**-**	**1,176,914.34**	**290.60**

Item # 541.30

Concrete, Class C (CY)

Concrete Class C is for Abutment 4 subfooting

Limts of Subfooting is 1'-0" Beyond Abutment 4 footing

Plan View Area	Average Depth	Volume
827.65 SF	1.5 LF	1241.475 CF
		÷ 27 CF/CY
		45.98056 CY
	SAY	50 **CY**

Calculated By: JDG 12/10/14
Checked By: WDL 12/11/14

Option AA

Item # 601.XX

Pipe Option (LF)

See Drainage Layout Sheet Item 16

SAY 30 **LF**

Calculated By: JDG 12/10/14
Checked By:

Item # 604.18

Precast Reinforced Concrete Drop Inlet with Cast Iron Grate

See Drainage Layout Sheet Item 15

SAY 1 **EA**

Calculated By: JDG 12/10/14
Checked By:

Item # 604.40

Changing Elevation of Drop Inlets, Catch Basins, or Manholes

See Drainage Layout Sheet Item 1, Item 29

SAY 1 **EA**

Calculated By: JDG 12/10/14
Checked By:

Item # 604.55

Cast Iron Cover with Frame

See Drainage Layout Sheet Item 21

SAY 1 **EA**

Calculated By: JDG 12/10/14
Checked By:

Hartford IM 091-2(79)

THESE QUANTITIES NEED TO BE ADDED TO THE MASTER

BY: JTS 10-31-2014 Recalculated by JDG 11/7/14

CK'D: JDG 10/31/2014 Rechecked by: WDL 11/7/14

501.34 Concrete, High Performance Class B **TOTAL** **197 CY**

		AREA (SF)	x	THICKNESS (LF)	=	VOL (CF)
RW-1A	FOOTING	16	x	10		160
RW-1B/C	FOOTING	51	x	8		408
RW-1	STEM	337.2	x	2		674.4
RW2A/B	FOOTING	46.63	x	10		466.3
RW-2C	FOOTING	40.63	x	8		325.04
RW-2	STEM	345.8	x	2		691.6
RW-3A	FOOTING	16	x	10		160
RW-3B	FOOTING	33.5	x	8		268
RW-3	STEM	286.5	x	2		573
RW-4A/4B	FOOTING	44	x	11		484
RW-4C	FOOTING	38	x	9		342
RW-4	STEM	374.5	x	2		749
				SUB TOTAL SB		5301.34 CF
					÷	27 CF/CY
					=	196.3459 CY
					SAY	**197 CY**

THESE QUANTITIES NEED TO BE ADDED TO THE MASTER

BY: JTS 10-31-2014 Recalculated by JDG 11/7/14

CK'D: JDG 10/31/2014 Rechecked by: WDL 11/7/14

501.34 Concrete, High Performance Class B **TOTAL** **161 CY**

		AREA (SF)	x	THICKNESS (LF)	=	VOL (CF)
RW-5A/RW-5B		41.63	x	10		416.3
RW-5C	FOOTING	21.63	x	8		173.04
RW-5	STEM	254.4	x	2		508.8
RW-6A	FOOTING	14	x	7		98
RW-6	STEM	56.82	x	2		113.64
RW7A/B	FOOTING	44	x	10		440
RW-7C	FOOTING	34	x	8.5		289
RW-7	STEM	332.25	x	2		664.5
RW8A	FOOTING	24	x	10		240
RW-8B-D	FOOTING	64	x	8		512
RW-8	STEM	438	x	2		876
					TOTAL	4331.28 CF
					÷	27 CF/CY
					=	160.4178 CY
					SAY	**161 CY**

Back Checked by: JDG
01/06/15

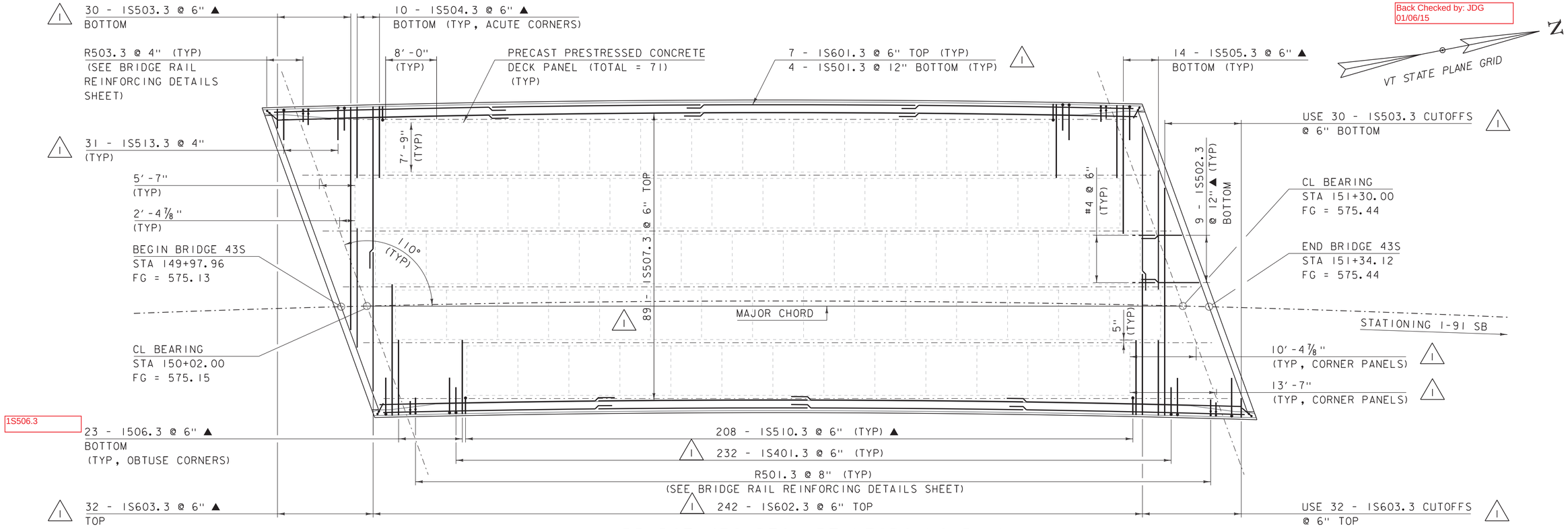

BRIDGE 43S DECK REINFORCING PLAN

SCALE 1/8" = 1'-0"

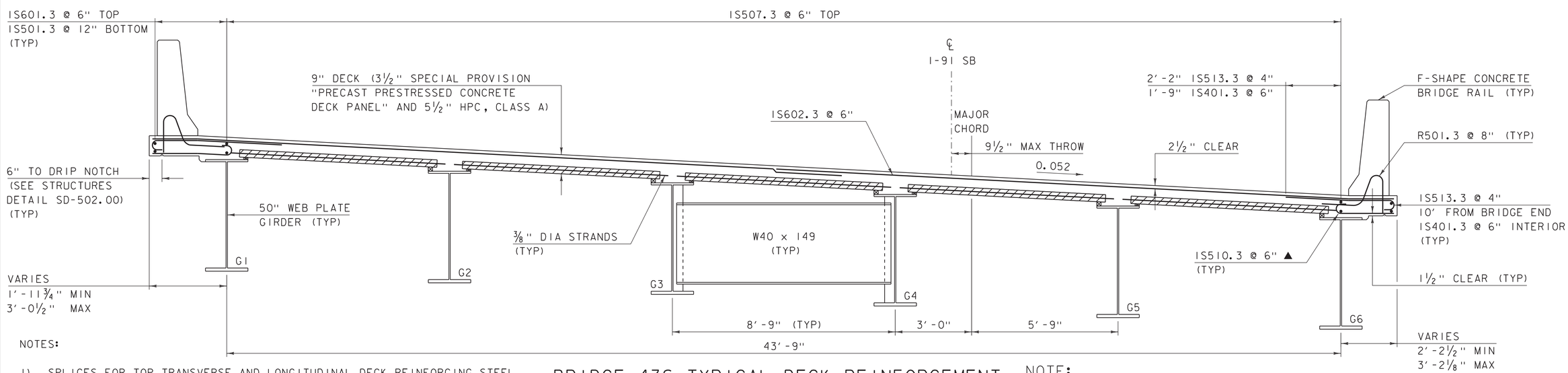

BRIDGE 43S TYPICAL DECK REINFORCEMENT

SCALE 1/2" = 1'-0"

NOTES:

1) SPLICES FOR TOP TRANSVERSE AND LONGITUDINAL DECK REINFORCING STEEL SHALL NOT BE LOCATED OVER PANEL JOINTS.

2) PRIOR TO PLACING THE DECK CONCRETE, LAITANCE OR OTHER CONTAMINATES THAT WOULD INTERFERE WITH FULL BOND TO THE PANELS SHALL BE REMOVED BY AN APPROVED METHOD PER SECTION 510.12(b)(4).

3) PRIOR TO PLACING THE DECK CONCRETE, THE PRECAST PRESTRESSED CONCRETE DECK PANELS SHALL BE WETTED IN ACCORDANCE WITH SECTION 501.10(d).

REVISION	DATE	DESCRIPTION	BY
1	01-05-2015	REINFORCING STEEL BAR COUNTS AND DIMENSIONS TO DECK PANELS	RK

NOTE:

NF = NEAR FACE
FF = FAR FACE
EF = EACH FACE
▲ = CUT TO FIT IN FIELD
3" CLEAR, UNLESS OTHERWISE SPECIFIED ON THE PLANS.
2'-2" BAR LAP FOR #5 REINFORCING
2'-7" BAR LAP FOR #6 REINFORCING

PROJECT NAME: HARTFORD
PROJECT NUMBER: IM 091-2(79)

FILE NAME: s12a132sup43S.dgn
PROJECT LEADER: K. HIGGINS
DESIGNED BY: R. KLINEFELTER
43S DECK REINFORCING PLAN

PLOT DATE: 05-JAN-2015
DRAWN BY: K. FRIEDLAND
CHECKED BY: R. KLINEFELTER
SHEET 90 OF 166

Back Checked by: JDG
01/06/15

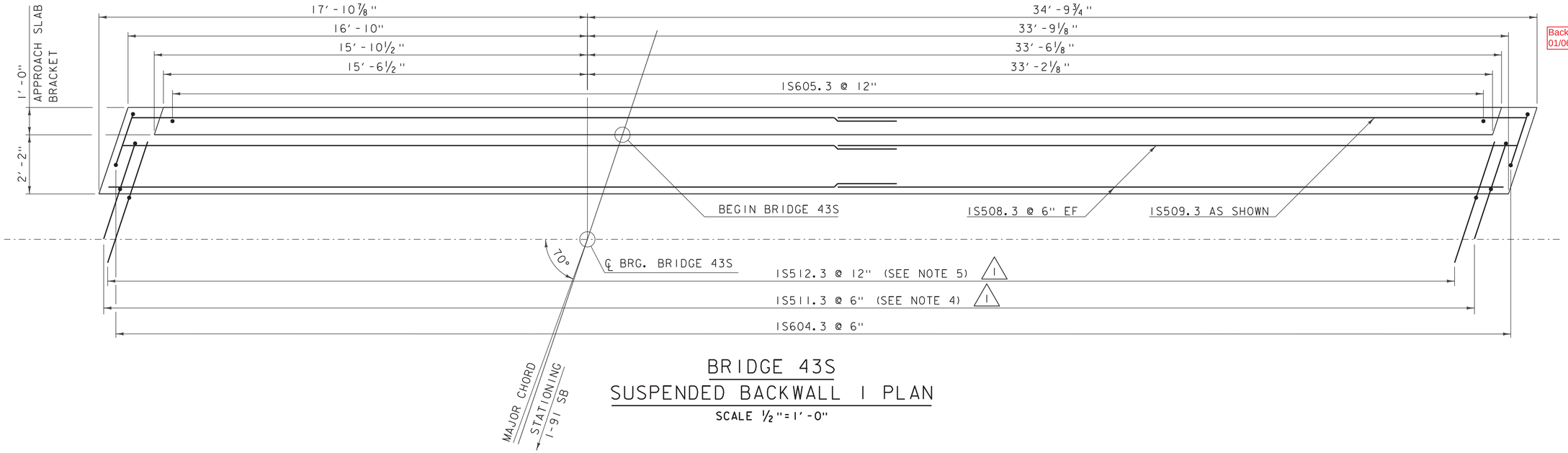

BRIDGE 43S
SUSPENDED BACKWALL 1 PLAN

SCALE 1/2"=1'-0"

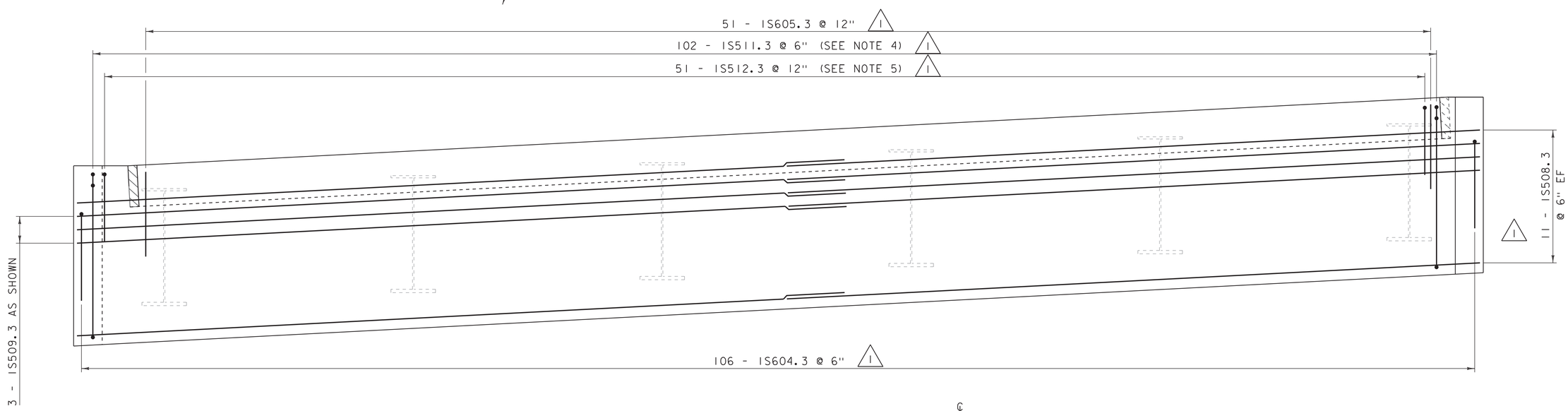

BRIDGE 43S
SUSPENDED BACKWALL 1 ELEVATION

SCALE 1/2"=1'-0"

NOTES:

1) BACKWALL 1 SHOWN. BACKWALL 2 SIMILAR.

2) BRIDGE DECK REINFORCING NOT SHOWN FOR CLARITY.

3) A TEMPLATE SHALL BE USED TO LAYOUT 1S605.3 BARS TO ENSURE PROPER ALIGNMENT WITH DUCTS IN APPROACH SLABS.

△1 4) AT EACH GIRDER LOCATION, BUNDLE (2) 1S511.3 BARS ON EACH SIDE OF THE GIRDER FLANGE AND OMIT THE (3) 1S511.3 BARS THAT FALL WITHIN THE WIDTH OF THE FLANGE.

△1 5) AT EACH GIRDER LOCATION, OMIT (1) 1S512.3 BAR THAT FALLS WITHIN THE WIDTH OF THE FLANGE.

REVISION	DATE	DESCRIPTION	BY
△1	01-05-2015	REINFORCING STEEL BAR COUNTS AND NOTES	RK

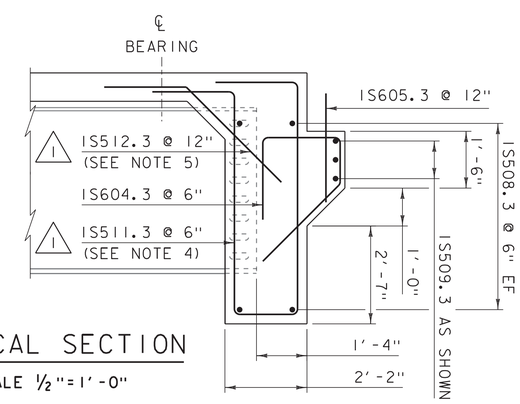

TYPICAL SECTION

SCALE 1/2"=1'-0"

NOTE:

NF = NEAR FACE
FF = FAR FACE
EF = EACH FACE
▲ = CUT TO FIT IN FIELD
3" CLEAR, UNLESS OTHERWISE SPECIFIED ON THE PLANS.
2'-2" BAR LAP FOR #5 REINFORCING

PROJECT NAME: HARTFORD
PROJECT NUMBER: IM 091-2(79)

FILE NAME: s12a132Backwall43S.dgn
PROJECT LEADER: K. HIGGINS
DESIGNED BY: R. KLINEFELTER
43S SUSPENDED BACKWALL DETAILS

PLOT DATE: 05-JAN-2015
DRAWN BY: K. FRIEDLAND
CHECKED BY: R. KLINEFELTER
SHEET 93 OF 166

STATE OF VERMONT
AGENCY OF TRANSPORTATION

△1 REINFORCING STEEL SCHEDULE

Back Checked by: JDG
01/06/15

ITEM	EACH	SIZE	LENGTH	MARK	TYPE	A	B	C	D	E	F	G	H	J	K	R	O
	32	5	36'- 2"	1S501.3	STR												
▲	90	5	17'- 1"	1S502.3	STR												
▲	30	5	37'- 2"	1S503.3	STR												
✳ ▲	21	5	11'- 9"	1S504.3	STR												
▲	28	5	26'- 2"	1S505.3	STR												
▲	46	5	11'- 10"	1S506.3	STR												
	356	5	35'- 7"	1S507.3	STR												
	88	5	27'- 2"	1S508.3	STR												
	12	5	27'- 2"	1S509.3	STR												
	56	6	36'- 6"	1S601.3	STR												
	484	6	25'- 7"	1S602.3	STR												
✳	65	6	23'- 11"	1S603.3	STR												
	102	6	2'- 10"	1S605.3	STR												
△	466	4	5'- 0"	1S401.3	1	0'- 6"	4'- 6"					---		0'- 4"			
▲	416	5	3'- 9"	1S510.3	1	0'- 7"	3'- 2"					---		0'- 5"			
	204	5	18'- 7"	1S511.3	S5	2'- 5"	6'- 1"	1'- 10"	5'- 10"			2'- 5"					
	102	5	5'- 6"	1S512.3	22		2'- 5"	3'- 1"	---				1'- 9"	---	1'- 9"	---	
	124	5	5'- 8"	1S513.3	1	0'- 7"	5'- 1"					---		0'- 5"			
	212	6	7'- 3"	1S604.3	16	1'- 0"	2'- 1"	1'- 2"	3'- 0"				2'- 1"		2'- 1"		

~ NOTES ~

1. UNLESS OTHERWISE DESIGNATED, ALL BAR REINFORCEMENT FOR CONCRETE IN SIZES UP TO AND INCLUDING NO. 18 SHALL CONFORM TO THE REQUIREMENTS OF THE "SPECIFICATIONS FOR DEFORMED BILLET-STEEL BARS FOR CONCRETE REINFORCEMENT", AASHTO M 31 (ASTM A 615-SI). ALL BARS SHALL BE GRADE 60, UNLESS OTHERWISE DESIGNATED.
2. FOR TYPICAL BENDING DETAILS, RECOMMENDED PIN DIAMETER "D" OF BENDS AND HOOKS, AND OTHER STANDARD PRACTICE, SEE CURRENT CONCRETE REINFORCING STEEL INSTITUTE "MANUAL OF STANDARD PRACTICE".
3. BARS WHICH REQUIRE MORE ACCURATE BENDING THAN STANDARD PRACTICES SHOULD HAVE LIMITS INDICATED.
4. ALL DIMENSIONS ARE OUT TO OUT OF BAR EXCEPT "A" AND "G" ON STANDARD 180 DEGREE AND 135 DEGREE HOOKS.
5. "J" DIMENSION ON 180 DEGREE HOOKS TO BE SHOWN ONLY WHERE NECESSARY TO RESTRICT HOOK SIZE. OTHERWISE, STANDARD HOOKS ARE TO BE USED.
6. "H" DIMENSION ON STIRRUPS TO BE SHOWN ONLY WHEN NECESSARY TO MAINTAIN CLEARANCES.
7. WHERE SLOPE DIFFERS FROM 45 DEGREES, DIMENSIONS "H" AND "K" MUST BE SHOWN.
8. ▲ DENOTES BARS TO BE CUT IN FIELD.
9. ✳ DENOTES ONE EXTRA BAR ADDED FOR TESTING PURPOSES.
10. △ DENOTES TWO EXTRA BARS ADDED FOR TESTING PURPOSES.
11. E IN BAR MARK PREFIX DENOTES EPOXY COATED REINFORCING STEEL.

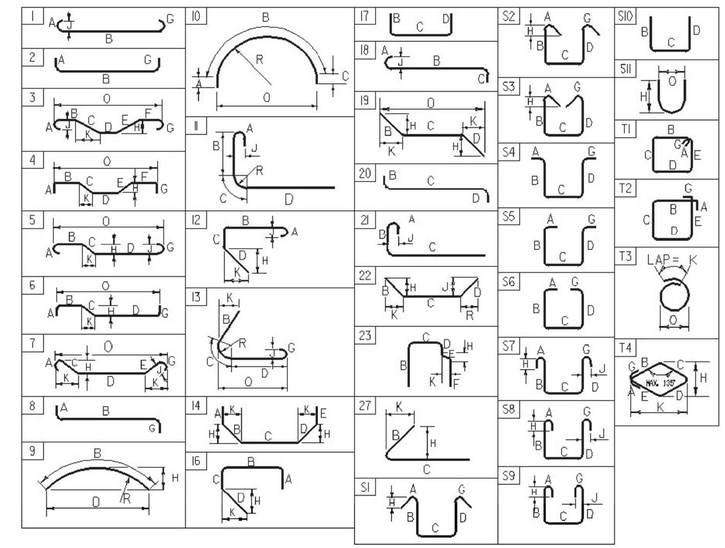

ASTM STANDARD REINFORCING BARS

BAR SIZE DESIGNATION	WEIGHT POUNDS PER FOOT	NOMINAL DIMENSIONS ROUND SECTION		
		DIAMETER INCHES	AREA INCHES2	PERIMETER INCHES
#3	0.376	0.375	0.11	1.178
#4	0.668	0.500	0.20	1.571
#5	1.043	0.625	0.31	1.963
#6	1.502	0.750	0.44	2.356
#7	2.04	0.875	0.60	2.749
#8	2.670	1.000	0.79	3.14
#9	3.400	1.13	1.00	3.54
#10	4.3	1.270	1.27	3.990
#11	5.31	1.410	1.56	4.430
#14	7.65	1.69	2.25	5.32
#18	13.60	2.26	4.00	7.09

~ REINFORCING STEEL CORROSION RESISTANCE LEVEL ~

THE REINFORCING STEEL MARKS IN THIS SCHEDULE INDICATE THE REQUIRED BAR CORROSION RESISTANCE LEVEL. CORROSION RESISTANCE LEVEL IS DENOTED WITH A .2 FOR LEVEL TWO SUFFIX OR .3 FOR LEVEL THREE SUFFIX, .1 FOR LEVEL ONE IS TO BE OMITTED. THE BAR MATERIAL TYPE AND BAR STEEL GRADE PROVIDED FOR EACH CORROSION LEVEL WILL BE RECORDED ON THE PLAN SET PI SHEET FOR AS-BUILT RECORD PLAN ARCHIVES.

REVISION	DATE	DESCRIPTION	BY
△1	01-05-2015	REINFORCING STEEL SCHEDULE UPDATE, ADDED TEST BARS	RK

PROJECT NAME: **HARTFORD**
PROJECT NUMBER: **IM 091-2 (79)**

FILE NAME: **s12a132RSS_43S.dgn**
PROJECT MANAGER: **K. HIGGINS**
DESIGNED BY: **R. KLINEFELTER**
RSS SUPERSTRUCTURE 43S

PLOT DATE: **1/5/2015**
DRAWN BY: **K. FRIEDLAND**
CHECKED BY: **J. GRIGAS**
SHEET **125** OF **166**

Back Checked by: JDG 01/06/15

L = 138'-5"-(2*2") = 138'-1" + (3 SPLICES @ 2'-2") = 144'-7"
= SAY 144'-7" / 4 = 36'-2"
L = 4 BARS @ 36'-2" EACH

LOCATION: FASCIA TO ℄ OF GIRDER. BOTTOM.

QUANTITY:

MAX OVERHANG (LEFT OFFSET) = 3.0417'
3.0417' - (3" CLR) = (2.79'/1') + 1 = 3.79 BARS = SAY 4 BARS * 4 = 16 BARS

MAX OVERHANG (RIGHT OFFSET) = 3.177'
3.18' - (3" CLR) = (2.93'/1') + 1 = 3.93 BARS = SAY 4 BARS * 4 = 16 BARS

TOTAL = 32 BARS

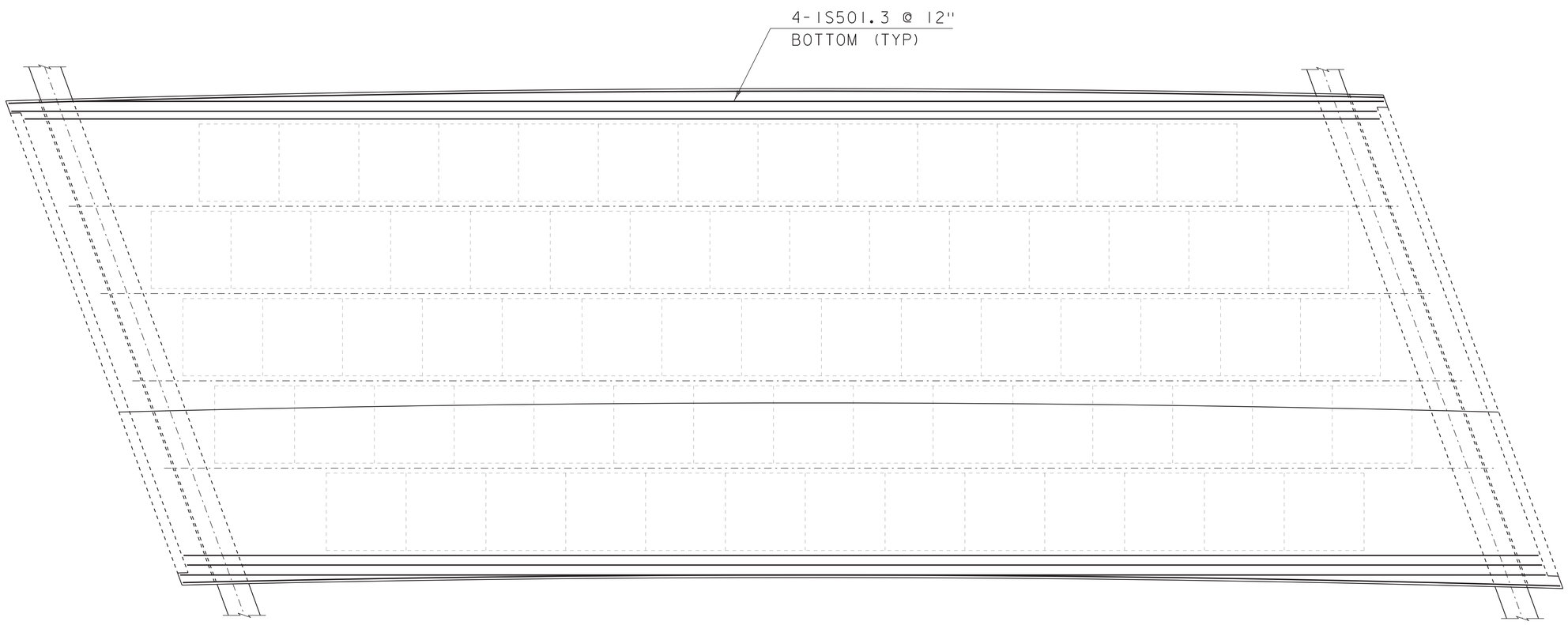

1S501.3 @ 12" BOTTOM

NOT TO SCALE

PROJECT NAME: HARTFORD	
PROJECT NUMBER: IM 091-2 (79)	
FILE NAME: s12a132sup43S_RSQuant.dgn	PLOT DATE: 05-JAN-2015
PROJECT LEADER: K. HIGGINS	DRAWN BY: K. FRIEDLAND
DESIGNED BY: R. KLINEFELTER	CHECKED BY: R. KLINEFELTER
SUP 43S REINFORCING QUANTITY 1	SHEET 1 OF 21

Back Checked by: JDG 01/06/15

IS502.3 @ 12" BOTTOM
(cut to fit)

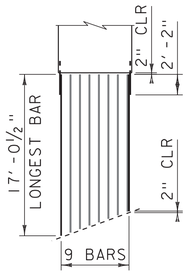

LONGEST BAR = 17.0417'

QUANTITY:

((7.75') - (2*2")) / 1' = 7.42 BARS +1 = 8.42 BARS

SAY = 9 BARS * 10 END PANELS = 90 BARS

IS503.3 @ 6" BOTTOM
(cut to fit)

LONGEST BAR = 37'-1¾" (ABUTMENT 2 END)

QUANTITY:

((14'-6⅝") - (2")) / .5' = 28.77 BARS +1 = 29.77 BARS

SAY = 30 BARS (USE CUTOFFS OTHER END)

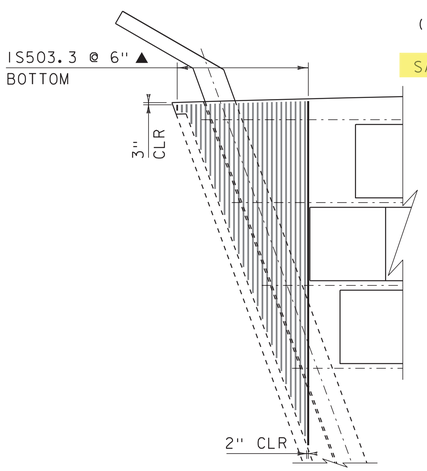

IS504.3 @ 6" BOTTOM
(cut to fit)

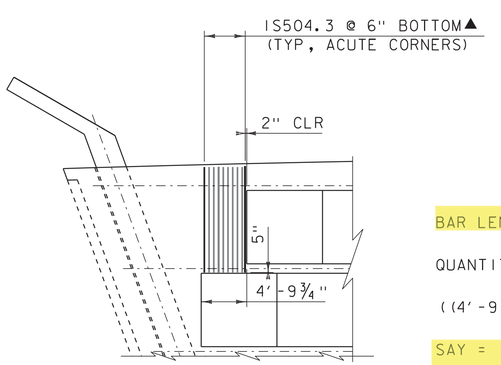

BAR LENGTH = 11'-9" (MAX ABUT#2 END ACUTE CORNER)

QUANTITY:

((4'-9¾") - (4")) / .5' = 8.96 BARS +1 = 9.96 BARS

SAY = 10 BARS * (2) = 20 BARS

IS505.3 @ 6" BOTTOM
(cut to fit)

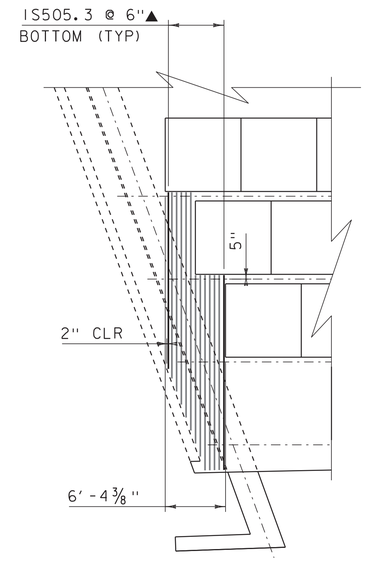

LONGEST BAR LENGTH = 26'-2"

QUANTITY:

((6'-⅜") - (2")) / .5' = 12.73 BARS +1 = 13.73 BARS

SAY = 14 BARS * (2) = 28 BARS

IS506.3 @ 6" BOTTOM
(cut to fit)

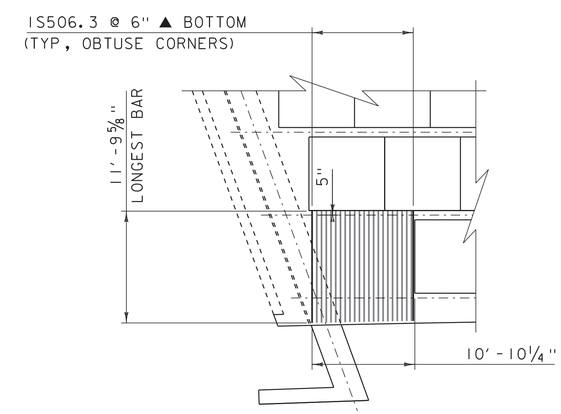

LONGEST BAR LENGTH = 11'-9⅝"

QUANTITY:

((10'-10¼") - (2")) / .5' = 21.38 BARS +1 = 22.38 BARS

SAY = 23 BARS * (2) = 46 BARS

NOT TO SCALE

PROJECT NAME: HARTFORD	
PROJECT NUMBER: IM 091-2 (79)	
FILE NAME: sl2al32sup43S_RSQuant.dgn	PLOT DATE: 05-JAN-2015
PROJECT LEADER: K. HIGGINS	DRAWN BY: K. FRIEDLAND
DESIGNED BY: R. KLINEFELTER	CHECKED BY: R. KLINEFELTER
SUP 43S REINFORCING QUANTITY 2	SHEET 2 OF 21

Back Checked by: JDG 01/06/15

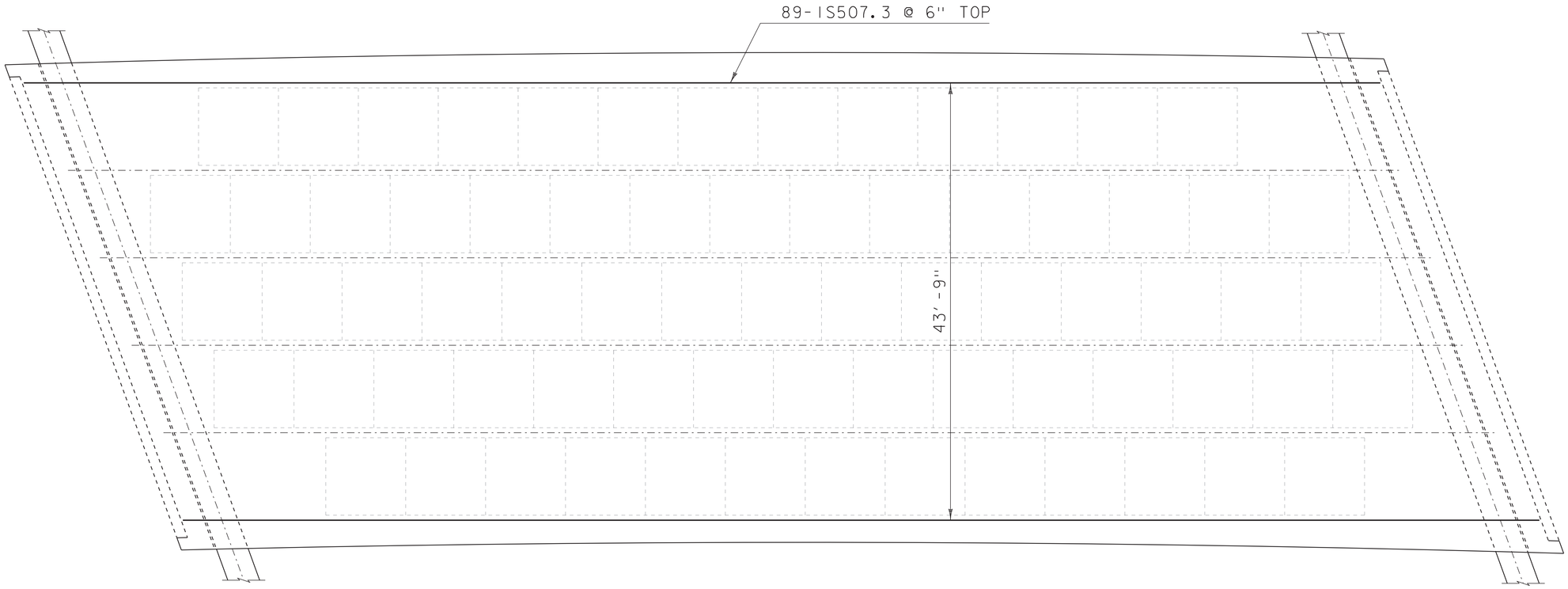

BAR LENGTH = ((136'-1¾")-(2*2")) + (3 SPLICES @ 2'-2") = 142'-2¾"
= SAY 142'-3" / 4 = 4 BARS @ 35'-6¾"
= 4 BARS @ 35'-6¾" EACH

LOCATION: BARS RUN FROM CENTER OF GIRDER 1 TO GIRDER 6.

QUANTITY:
(43'-9")/.5' = 87.5 BARS +1 = 88.5 BARS

SAY = 89 BARS * 4 = 356 BARS

IS507.3 @ 6" TOP

NOT TO SCALE

SEE BACKWALL CALCS

IS508.3 @ 6" EF

NOT TO SCALE

PROJECT NAME: HARTFORD	
PROJECT NUMBER: IM 091-2 (79)	
FILE NAME: s12a132sup43S_RSQuant.dgn	PLOT DATE: 05-JAN-2015
PROJECT LEADER: K. HIGGINS	DRAWN BY: K. FRIEDLAND
DESIGNED BY: R. KLINEFELTER	CHECKED BY: R. KLINEFELTER
SUP 43S REINFORCING QUANTITY 3	SHEET 3 OF 21

Back Checked by: JDG 01/06/15

SEE BACKWALL CALCS

IS509.3 AS SHOWN

NOT TO SCALE

LONGEST BAR
180° HOOK

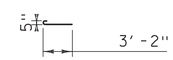

A = 7"
B = 3'-2"
J = 5"

LOCATION: OVERHANG

QUANTITY:

(103'-4")/.5' = 206.67 BARS +1 = 207.67 BARS

SAY = 208 BARS * 2 OVERHANGS = 416 BARS

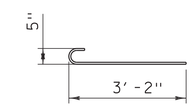

180° HOOK
LONGEST BAR

NOT TO SCALE

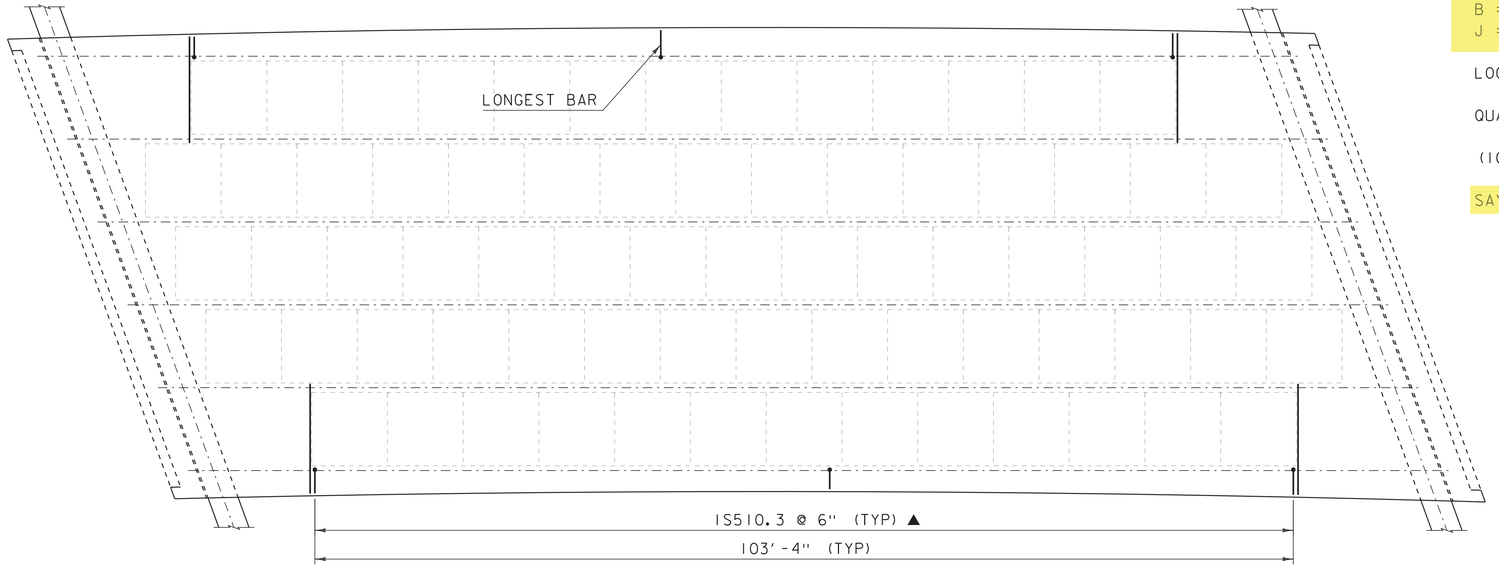

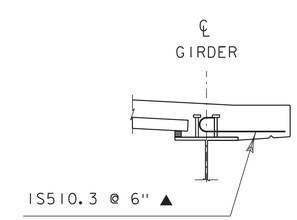

IS510.3 @ 6"
(CUT TO FIT)

NOT TO SCALE

PROJECT NAME: HARTFORD	
PROJECT NUMBER: IM 091-2 (79)	
FILE NAME: s12a132sup43S_RSQuant.dgn	PLOT DATE: 05-JAN-2015
PROJECT LEADER: K. HIGGINS	DRAWN BY: K. FRIEDLAND
DESIGNED BY: R. KLINEFELTER	CHECKED BY: R. KLINEFELTER
SUP 43S REINFORCING QUANTITY 4	SHEET 4 OF 21

Back Checked by: JDG 01/06/15

IS604.3 @ 6"

SEE BACKWALL CALCS

DELETED

IS511.3 @ 6"

SEE BACKWALL CALCS

IS512.3 @ 12"

SEE BACKWALL CALCS

PROJECT NAME: HARTFORD	
PROJECT NUMBER: IM 091-2 (79)	
FILE NAME: s12a132sup43S_RSQuant.dgn	PLOT DATE: 05-JAN-2015
PROJECT LEADER: K. HIGGINS	DRAWN BY: K. FRIEDLAND
DESIGNED BY: R. KLINEFELTER	CHECKED BY: R. KLINEFELTER
SUP 43S REINFORCING QUANTITY 5	SHEET 5 OF 21

Back Checked by: JDG 01/06/15

L = 138'-3¼"-(2*2") = 137'-11¼" + (3 SPLICES @ 2'-7") = 145'-9"
= SAY = 145'-9" / 4 = 4 BARS @ 36'-6"
L = 4 BARS @ 36'-6"

LOCATION: FASCIA TO ℄ OF GIRDER. BOTTOM.

QUANTITY:

MAX OVERHANG (LEFT OFFSET) = 3.0417'
((3.0417') - (3" CLR))/6" = 5.58 BARS +1 = SAY 7 BARS * 4 = 28 BARS

MAX OVERHANG (RIGHT OFFSET) = 3.177'
((3.18') - (3" CLR))/6" = 5.68 BARS +1 = SAY 7 BARS * 4 = 28 BARS

TOTAL = 28 BARS * 2 OVERHANGS = 56 BARS

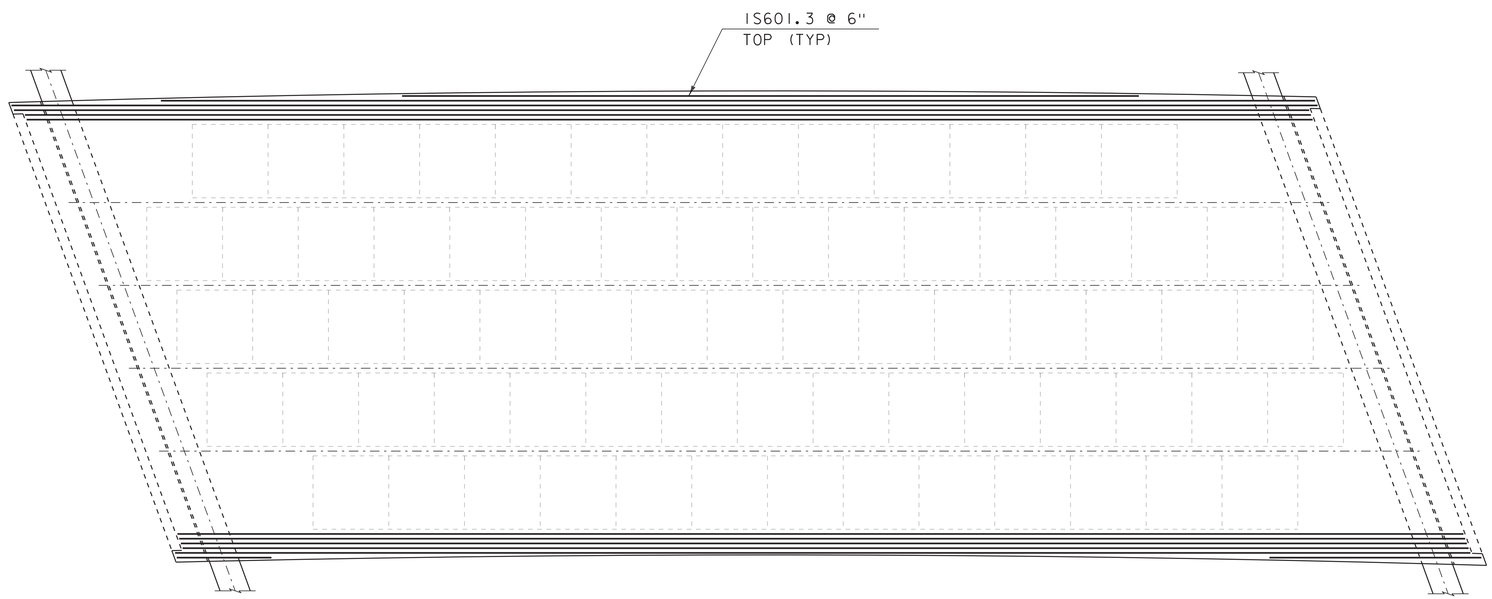

1S601.3 @ 12"
TOP

NOT TO SCALE

PROJECT NAME: HARTFORD	
PROJECT NUMBER: IM 091-2 (79)	
FILE NAME: s12a132sup43S_RSQuant.dgn	PLOT DATE: 05-JAN-2015
PROJECT LEADER: K. HIGGINS	DRAWN BY: K. FRIEDLAND
DESIGNED BY: R. KLINEFELTER	CHECKED BY: R. KLINEFELTER
SUP 43S REINFORCING QUANTITY 6	SHEET 6 OF 21

Back Checked by: JDG 01/06/15

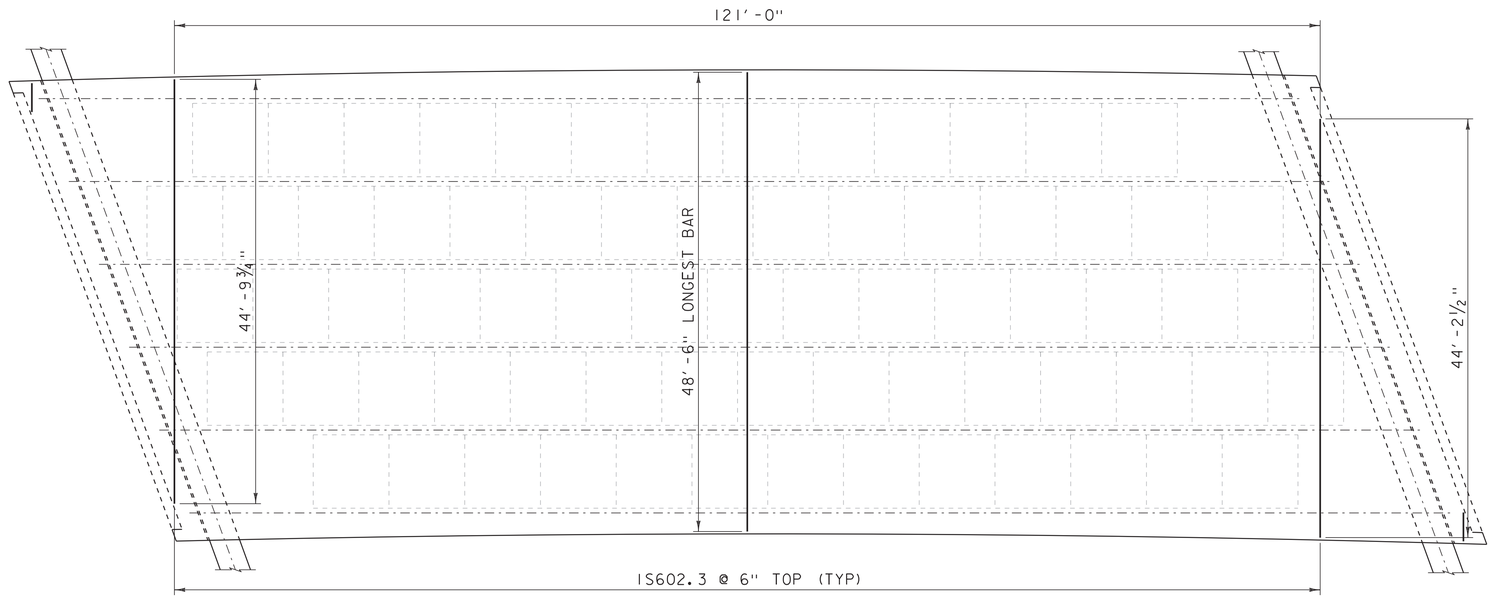

LONGEST BAR LENGTH = 48'-6" + (1 SPLICE @ 2'-7") = 51'-1"
= 51'-1" / 2 = 25'-6½"
= 2 BARS @ 25'-6½"

QUANTITY:

(120'-6")/.5' = 241 BARS +1 = 242 BARS * 2 = 484

SAY = 484 BARS

IS602.3 @ 6"
TOP

NOT TO SCALE

PROJECT NAME: HARTFORD	
PROJECT NUMBER: IM 091-2 (79)	
FILE NAME: sl2al32sup43S_RSQuant.dgn	PLOT DATE: 05-JAN-2015
PROJECT LEADER: K. HIGGINS	DRAWN BY: K. FRIEDLAND
DESIGNED BY: R. KLINEFELTER	CHECKED BY: R. KLINEFELTER
SUP 43S REINFORCING QUANTITY 7	SHEET 7 OF 21

Back Checked by: JDG 01/06/15

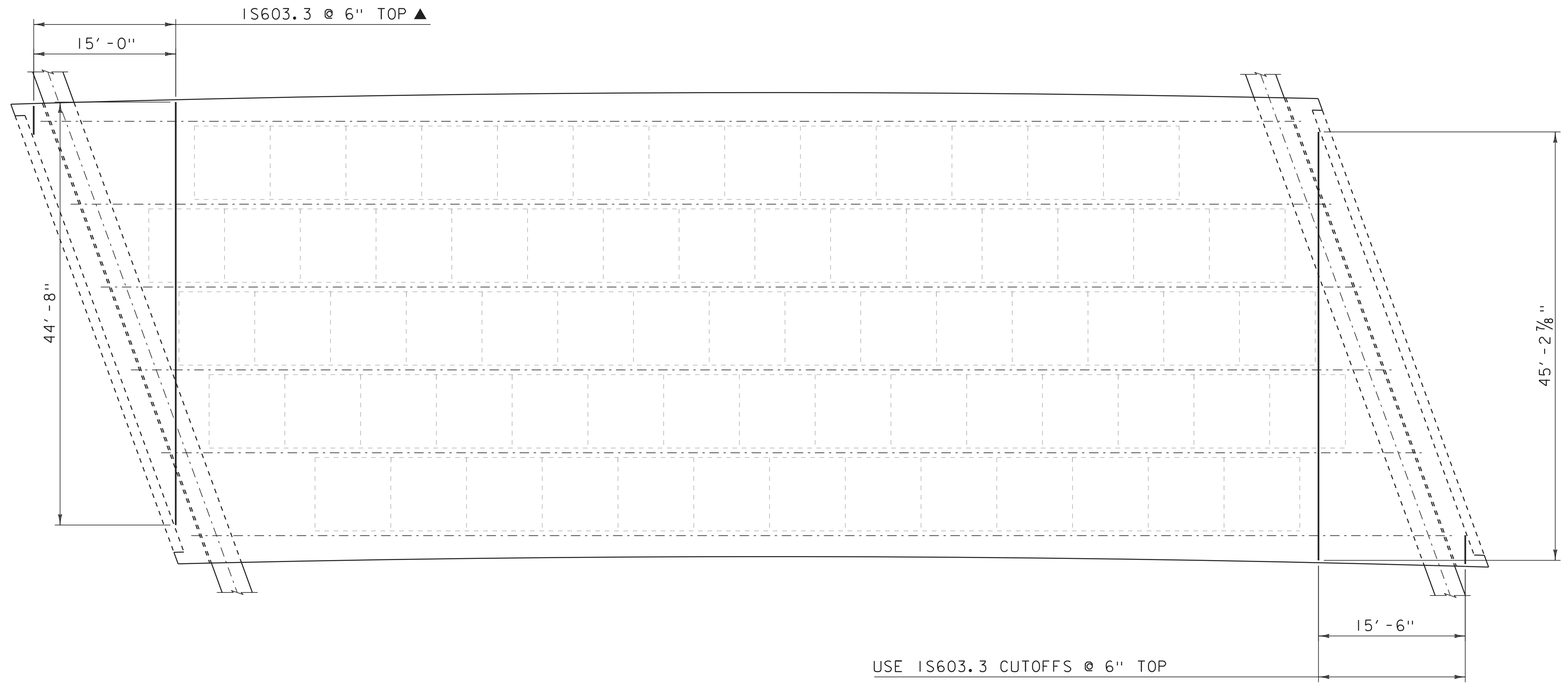

LONGEST BAR LENGTH = 45'-3" + (1 SPLICE @ 2'-7") = 47'-10"
= 47'-10" / 2 = 2 BARS @ 23'-11" EACH

QUANTITY:

(15'-6")/.5' = 31 BARS +1 = 32 BARS * 2 = 64 BARS

SAY = 64 BARS (USE CUTOFFS OTHER END)

IS603.3 @ 6" TOP
(CUT TO FIT)

NOT TO SCALE

PROJECT NAME: HARTFORD	
PROJECT NUMBER: IM 091-2 (79)	
FILE NAME: s12a132sup43S_RSQuant.dgn	PLOT DATE: 05-JAN-2015
PROJECT LEADER: K. HIGGINS	DRAWN BY: K. FRIEDLAND
DESIGNED BY: R. KLINEFELTER	CHECKED BY: R. KLINEFELTER
SUP 43S REINFORCING QUANTITY 8	SHEET 8 OF 21

Back Checked by: JDG 01/06/15

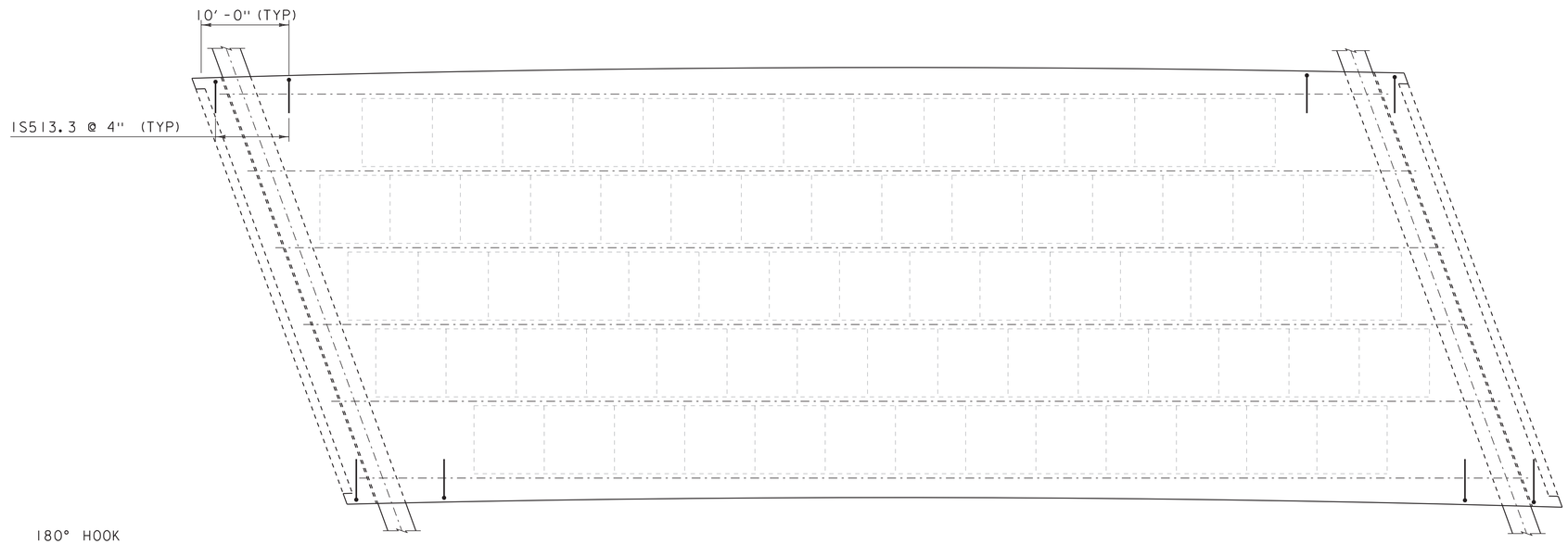

A = 7"
B = 5'-1"
J = 5"

180° HOOK
LONGEST BAR

LOCATION: OVERHANG

QUANTITY:

(10'-2")/4" = 29.5 BARS +1 = 30.5 BARS
SAY = 31 BARS

TOTAL = 31 BARS * 4 CORNERS = SAY = 124

1S513.3 @ 4"

NOT TO SCALE

PROJECT NAME: HARTFORD	
PROJECT NUMBER: IM 091-2 (79)	
FILE NAME: s12a132sup43S_RSQuant.dgn	PLOT DATE: 05-JAN-2015
PROJECT LEADER: K. HIGGINS	DRAWN BY: K. FRIEDLAND
DESIGNED BY: R. KLINEFELTER	CHECKED BY: R. KLINEFELTER
SUP 43S REINFORCING QUANTITY 9	SHEET 9 OF 21

Back Checked by: JDG 01/06/15

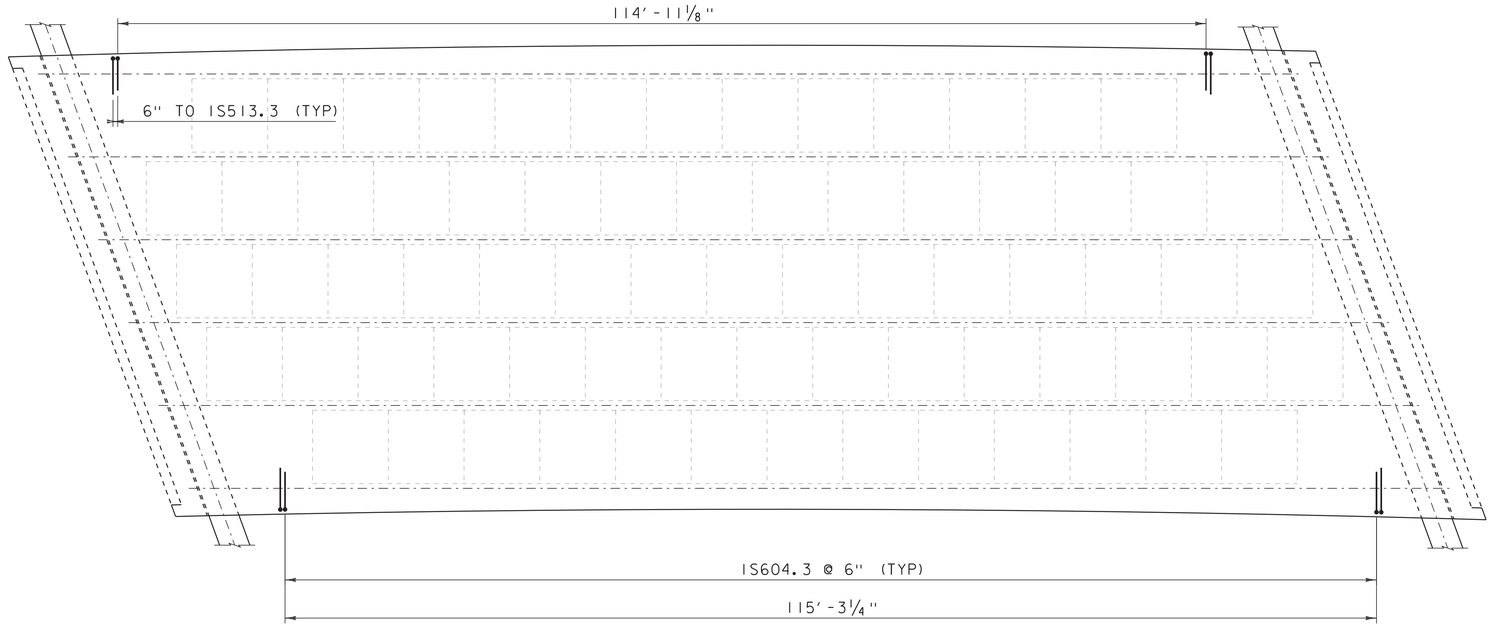

TYPE 1
A = 6″
B = 4′-6″
J = 4″
G = ---

180° HOOK

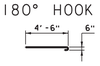

LONGEST BAR

LOCATION: OVERHANG

QUANTITY:

(115′-3¼″)/.5′ = 230.5 BARS +1 = 232 BARS

SAY = 232 BARS * 2 OVERHANGS = 464 BARS

1S401.3 @ 6″

NOT TO SCALE

PROJECT NAME: HARTFORD	
PROJECT NUMBER: IM 091-2 (79)	
FILE NAME: s12a132sup43S_RSQuant.dgn	PLOT DATE: 05-JAN-2015
PROJECT LEADER: K. HIGGINS	DRAWN BY: K. FRIEDLAND
DESIGNED BY: R. KLINEFELTER	CHECKED BY: R. KLINEFELTER
SUP 43S REINFORCING QUANTITY 10	SHEET 10 OF 21

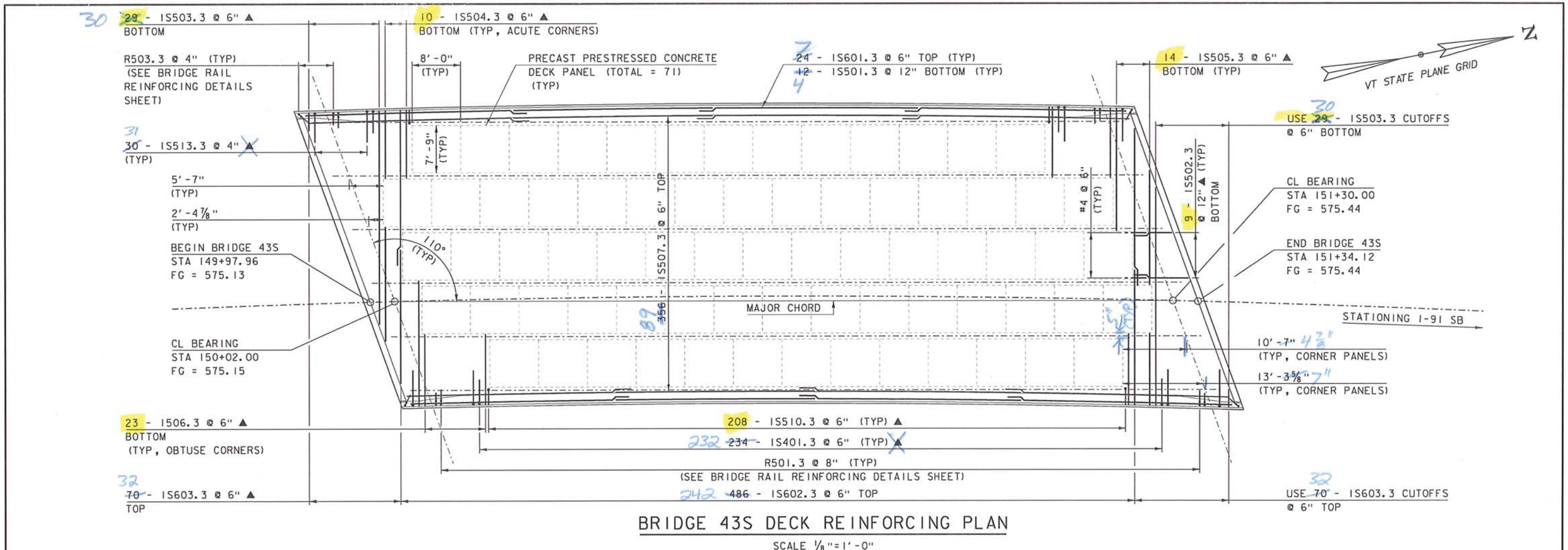

BRIDGE 43S DECK REINFORCING PLAN

SCALE 1/8" = 1'-0"

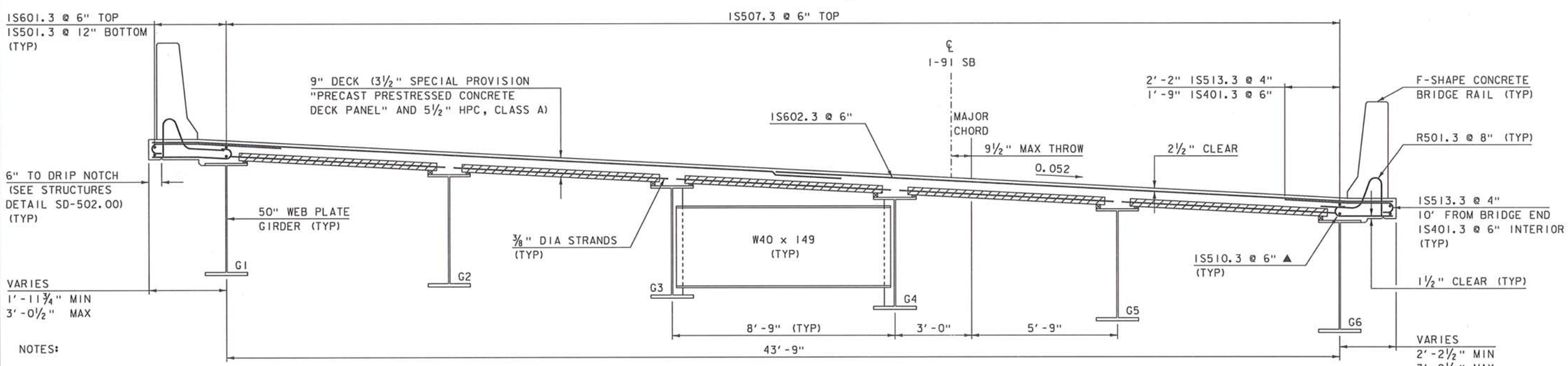

NOTES:

1) SPLICES FOR TOP TRANSVERSE AND LONGITUDINAL DECK REINFORCING STEEL SHALL NOT BE LOCATED OVER PANEL JOINTS.

2) PRIOR TO PLACING THE DECK CONCRETE, LAITANCE OR OTHER CONTAMINATES THAT WOULD INTERFERE WITH FULL BOND TO THE PANELS SHALL BE REMOVED BY AN APPROVED METHOD PER SECTION 510.12 (b) (4).

3) PRIOR TO PLACING THE DECK CONCRETE, THE PRECAST PRESTRESSED CONCRETE DECK PANELS SHALL BE WETTED IN ACCORDANCE WITH SECTION 501.10 (d).

BRIDGE 43S TYPICAL DECK REINFORCEMENT

SCALE 1/2" = 1'-0"

NOTE:
NF = NEAR FACE
FF = FAR FACE
EF = EACH FACE
▲ = CUT TO FIT IN FIELD
3" CLEAR, UNLESS OTHERWISE SPECIFIED ON THE PLANS.
2'-2" BAR LAP FOR #5 REINFORCING
2'-7" BAR LAP FOR #6 REINFORCING

RMK 12/23/14

PROJECT NAME: HARTFORD	
PROJECT NUMBER: IM 091-2(79)	
FILE NAME: s12a132sup43S.dgn	PLOT DATE: 15-DEC-2014
PROJECT LEADER: K. HIGGINS	DRAWN BY: K. FRIEDLAND
DESIGNED BY: R. KLINEFELTER	CHECKED BY: R. KLINEFELTER
43S DECK REINFORCING PLAN	SHEET 90 OF 166

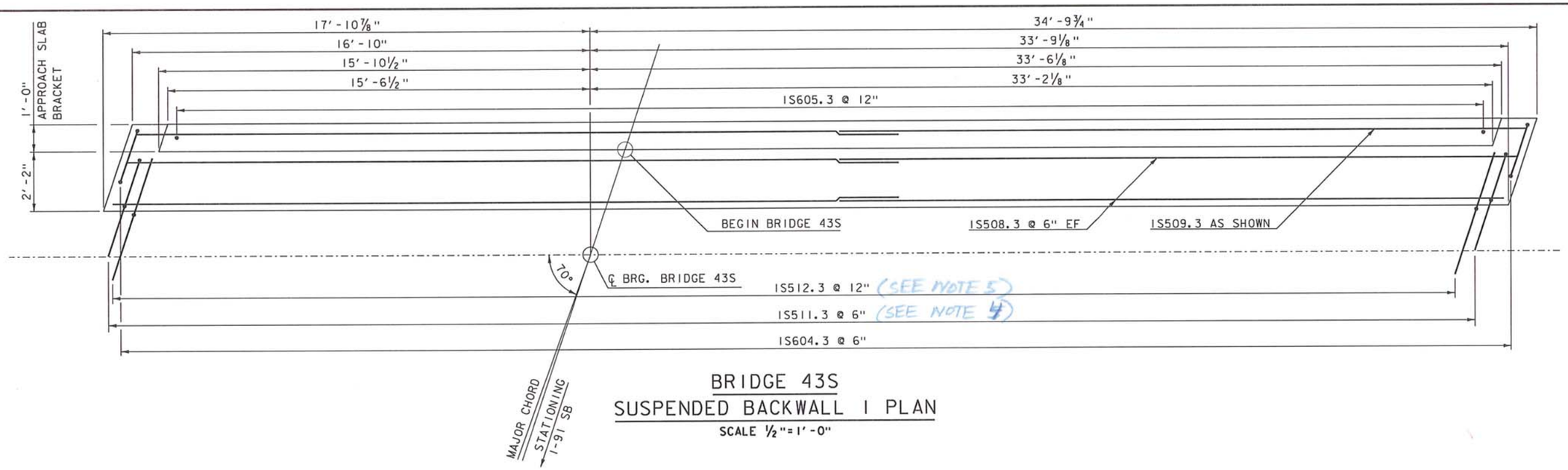

BRIDGE 43S
SUSPENDED BACKWALL 1 PLAN

SCALE ½" = 1'-0"

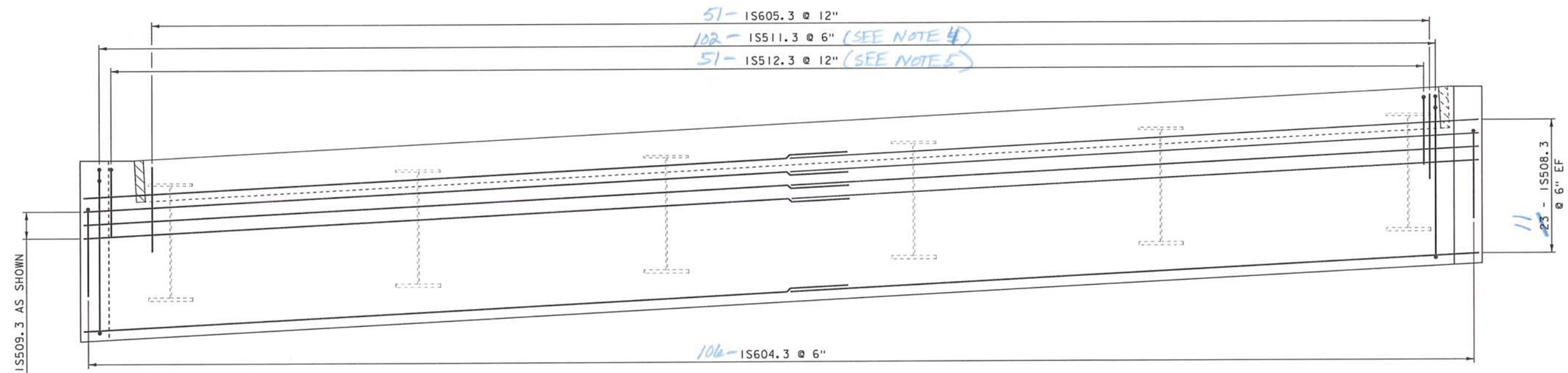

BRIDGE 43S
SUSPENDED BACKWALL 1 ELEVATION

SCALE ½" = 1'-0"

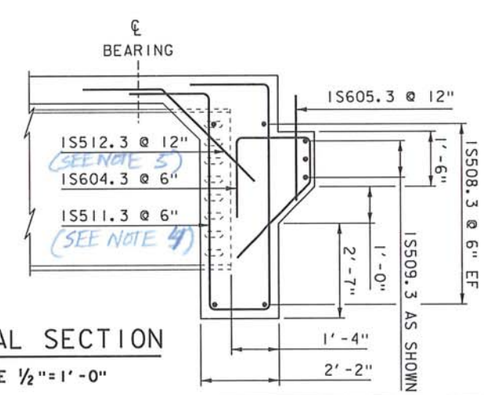

TYPICAL SECTION

SCALE ½" = 1'-0"

NOTE:

NF = NEAR FACE
FF = FAR FACE
EF = EACH FACE
▲ = CUT TO FIT IN FIELD
3" CLEAR, UNLESS OTHERWISE SPECIFIED ON THE PLANS.
2'-2" BAR LAP FOR #5 REINFORCING

RMK 12/23/14

NOTES:

1) BACKWALL 1 SHOWN. BACKWALL 2 SIMILAR.

2) BRIDGE DECK REINFORCING NOT SHOWN FOR CLARITY.

3) A TEMPLATE SHALL BE USED TO LAYOUT 1S605.3 BARS TO ENSURE PROPER ALIGNMENT WITH DUCTS IN APPROACH SLABS.

4) At each girder location, Bundle (2) 1S511.3 bars on each side of the girder flange and omit the (3) 1S511.3 bars that fall within the width of the flange.

5) At each girder location, omit (1) 1S512.3 bar that falls within the width of the flange.

PROJECT NAME: HARTFORD	
PROJECT NUMBER: IM 091-2(79)	
FILE NAME: s12a132Backwall43S.dgn	PLOT DATE: 15-DEC-2014
PROJECT LEADER: K. HIGGINS	DRAWN BY: K. FRIEDLAND
DESIGNED BY: R. KLINEFELTER	CHECKED BY: R. KLINEFELTER
43S SUSPENDED BACKWALL DETAILS	SHEET 93 OF 166

STATE OF VERMONT
AGENCY OF TRANSPORTATION

REINFORCING STEEL SCHEDULE

ITEM	EACH	SIZE	LENGTH	MARK	TYPE	A	B	C	D	E	F	G	H	J	K	R	O
	468	4	5'- 0"	1S501.3	STR	6"	4'- 6"							4"			
	24	5	35'- 11"	1S501.3	STR												
▲	90	5	17'- 1"	1S502.3	STR												
▲	29	5	36'- 4"	1S503.3	STR												
▲	22	5	11'- 2"	1S504.3	STR												
▲	28	5	27'- 11"	1S505.3	STR												
▲	46	5	11'- 10"	1S506.3	STR												
	356	5	35'- 7"	1S507.3	STR												
	92	5	28'- 7"	1S508.3	STR												
	12	5	28'- 7"	1S509.3	STR												
▲	416	5	3'- 8"	1S510.3	1	7"	3'- 1"							5"			
	146	5	7'- 11"	1S511.3		2'- 2"	1'- 11"	1'- 2"	2'- 8"				1'- 11"		1'- 11"		
	146	5	14'- 4"	1S512.3			5'- 11"	1'- 8"	4'- 7"			2'- 2"					
	146	5	5'- 11"	1S513.3		2'- 2"	3'- 9"										
	146	5	6'- 7"	1S514.3				2'- 2"	4'- 5"				3'- 2"		3'- 2"		
	48	6	36'- 4"	1S601.3	STR												
	486	6	25'- 7"	1S602.3	STR												
	70	6	23'- 0"	1S603.3	STR												
	78	7	7'- 6"	1S701.3		1'- 2"	6'- 4"							0'- 7"			

~ NOTES ~

1. UNLESS OTHERWISE DESIGNATED, ALL BAR REINFORCEMENT FOR CONCRETE IN SIZES UP TO AND INCLUDING NO. 18 SHALL CONFORM TO THE REQUIREMENTS OF THE "SPECIFICATIONS FOR DEFORMED BILLET-STEEL BARS FOR CONCRETE REINFORCEMENT", AASHTO M 31 (ASTM A 615-SI). ALL BARS SHALL BE GRADE 60, UNLESS OTHERWISE DESIGNATED.
2. FOR TYPICAL BENDING DETAILS, RECOMMENDED PIN DIAMETER "D" OF BENDS AND HOOKS, AND OTHER STANDARD PRACTICE, SEE CURRENT CONCRETE REINFORCING STEEL INSTITUTE "MANUAL OF STANDARD PRACTICE".
3. BARS WHICH REQUIRE MORE ACCURATE BENDING THAN STANDARD PRACTICES SHOULD HAVE LIMITS INDICATED.
4. ALL DIMENSIONS ARE OUT TO OUT OF BAR EXCEPT "A" AND "G" ON STANDARD 180 DEGREE AND 135 DEGREE HOOKS.
5. "J" DIMENSION ON 180 DEGREE HOOKS TO BE SHOWN ONLY WHERE NECESSARY TO RESTRICT HOOK SIZE. OTHERWISE, STANDARD HOOKS ARE TO BE USED.
6. "H" DIMENSION ON STIRRUPS TO BE SHOWN ONLY WHEN NECESSARY TO MAINTAIN CLEARANCES.
7. WHERE SLOPE DIFFERS FROM 45 DEGREES, DIMENSIONS "H" AND "K" MUST BE SHOWN.
8. ▲ DENOTES BARS TO BE CUT IN FIELD.
9. ✳ DENOTES ONE EXTRA BAR ADDED FOR TESTING PURPOSES.
10. △ DENOTES TWO EXTRA BARS ADDED FOR TESTING PURPOSES.
11. E IN BAR MARK PREFIX DENOTES EPOXY COATED REINFORCING STEEL.

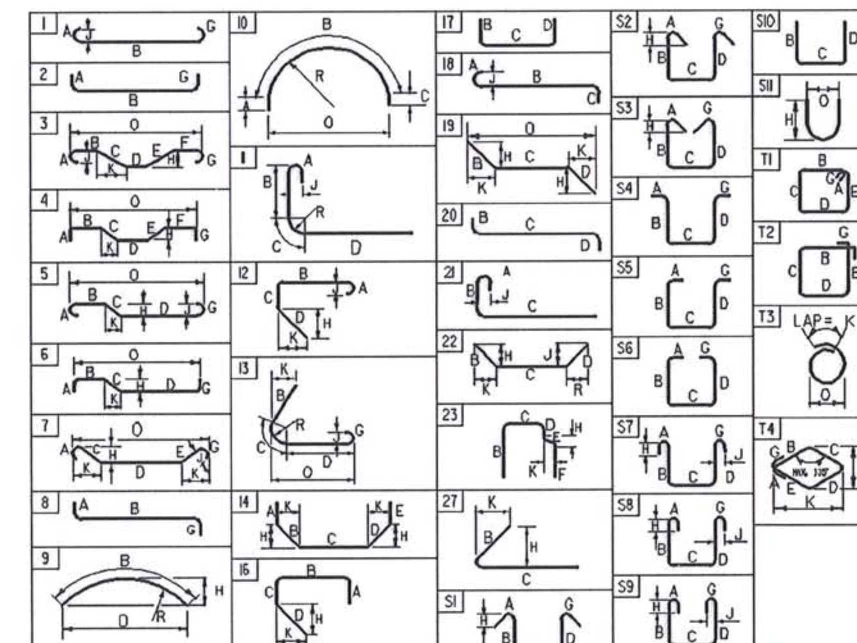

ASTM STANDARD REINFORCING BARS				
[illegible]	[illegible]	[illegible]	[illegible]	[illegible]
#3	0.376	0.375	0.11	1.178
#4	0.668	0.500	0.20	1.571
#5	1.043	0.625	0.31	1.963
#6	1.502	0.750	0.44	2.356
#7	2.04	0.875	0.60	2.749
#8	2.670	1.000	0.79	3.14
#9	3.400	1.13	1.00	3.54
#10	4.3	1.270	1.27	3.990
#11	5.31	1.410	1.56	4.430
#14	7.65	1.69	2.25	5.32
#18	13.60	2.26	4.00	7.09

~ REINFORCING STEEL CORROSION RESISTANCE LEVEL ~

THE REINFORCING STEEL MARKS IN THIS SCHEDULE INDICATE THE REQUIRED BAR CORROSION RESISTANCE LEVEL. CORROSION RESISTANCE LEVEL IS DENOTED WITH A .2 FOR LEVEL TWO SUFFIX OR .3 FOR LEVEL THREE SUFFIX, .1 FOR LEVEL ONE IS TO BE OMITTED. THE BAR MATERIAL TYPE AND BAR STEEL GRADE PROVIDED FOR EACH CORROSION LEVEL WILL BE RECORDED ON THE PLAN SET PI SHEET FOR AS-BUILT RECORD PLAN ARCHIVES.

RMK 12/29/14

PROJECT NAME: HARTFORD
PROJECT NUMBER: IM 091-2 (79)
FILE NAME: s12a132_Sup43S_RSS.dgn
PROJECT MANAGER: K. HIGGINS
DESIGNED BY: W. LAMMER
REINFORCING STEEL SCHEDULE SUPER 43S
PLOT DATE: 11/26/2014
DRAWN BY: K. FRIEDLAND
CHECKED BY: W. LAMMER
SHEET OF

PDF is somewhat out dated. Changes were made after this PDF was made and the Back-wall geometry changed as well.

L = 137'-2½"-(2*2") = 137'-½" + (3 SPLICES @ 2'-2") = 143'-6½"

138.2741 0.33' + 3*(2'-2") = 144'-6"

agree, maybe the wrong L, but I cant come up with your L. But I get 138.2914' along the Alignment. So close enough to your number.

= SAY 143'-6½" / 4 = 35'-10½"

36'-2"

L = 4 BARS @ 35'-5" EACH

36'-2"

LOCATION: FASCIA TO ℄ OF GIRDER. BOTTOM.

QUANTITY:

MAX OVERHANG (LEFT OFFSET) = 3.0417'

3.0417' - (3" CLR) = 2.79'/1' = 2.79 BARS = SAY 3 BARS * 4 = 12 BARS

16 Bars

2.79/12" + 1 = 4 Bars

MAX OVERHANG (RIGHT OFFSET) = 3.177'

3.18' - (3" CLR) = 2.93'/1' = 2.93 BARS = SAY 3 BARS * 4 = 12 BARS

16 Bars

TOTAL = ~~24~~ 32 BARS

2.93/12"+1

4 Bars

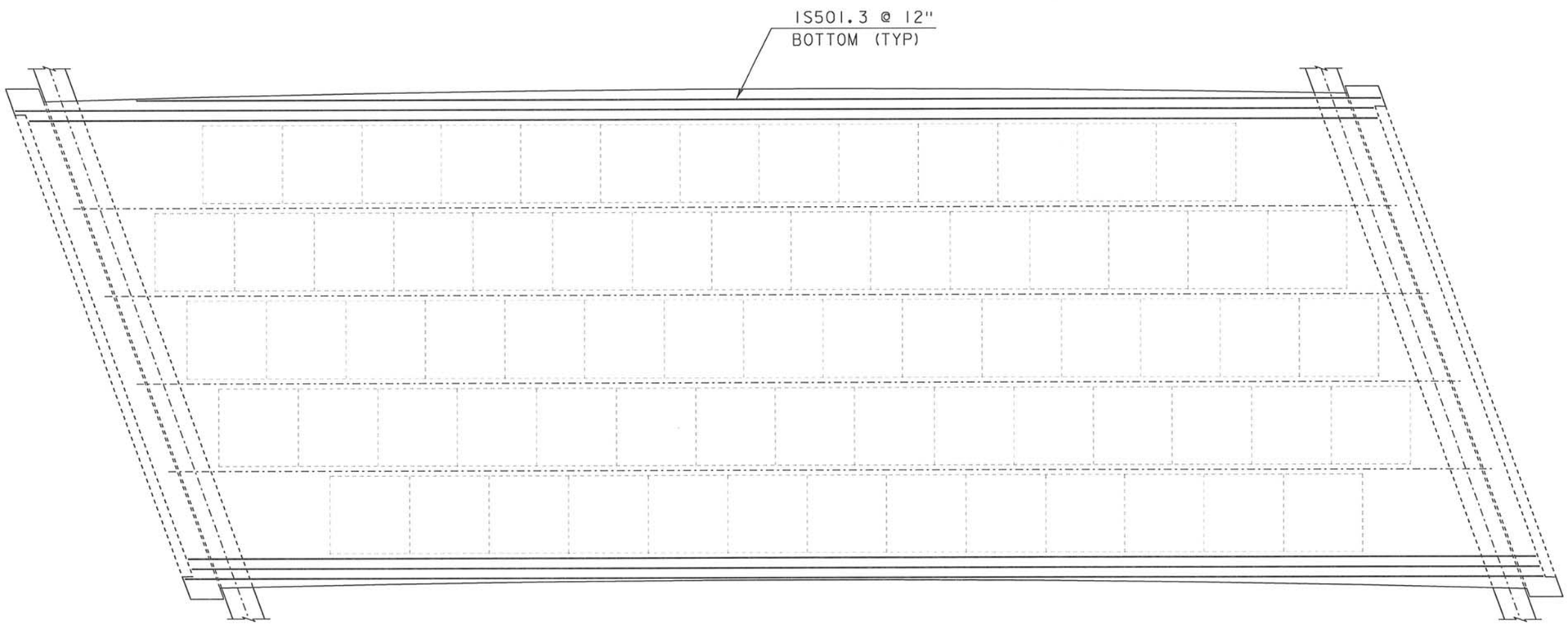

IS501.3 @ 12" BOTTOM

NOT TO SCALE

RMK 12/23/14

PROJECT NAME: HARTFORD	
PROJECT NUMBER: IM 091-2 (79)	
FILE NAME: sl2al32sup43S_RSQuant.dgn	PLOT DATE: 01-DEC-2014
PROJECT LEADER: K. HIGGINS	DRAWN BY: K. FRIEDLAND
DESIGNED BY: R. KLINEFELTER	CHECKED BY: JDG 12/5/14
SUP 43S REINFORCING QUANTITY 1	SHEET 1 OF 21

IS502.3 @ 12" BOTTOM
(cut to fit)

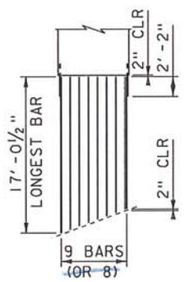

LONGEST BAR = 17.0417'

QUANTITY:

((7.75') - (2*2"))/1' = 7.42 BARS +1 = 8.42 BARS

SAY = 9 BARS * 10 END PANELS = 90 BARS

IS503.3 @ 6" BOTTOM
(cut to fit)

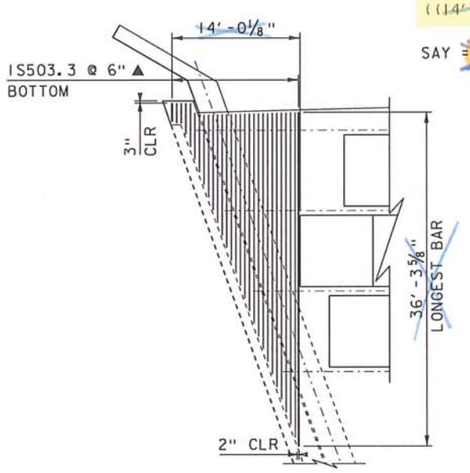

LONGEST BAR = ~~36'-3⅝"~~ 37'-1¾" ← Abut #2 end, measured @ 1.5" off from end of panel.

QUANTITY:

14'-6⅝" (Abut #2) 28.77 29.77

((14'-⅛") - (2"))/.5' = 27.68 BARS +1 = 28.68 BARS

SAY = ~~29 BARS * 2~~ = ~~58 BARS~~ 30 (Use cutoffs other end)

only 29 bars

IS504.3 @ 6" BOTTOM
(cut to fit)

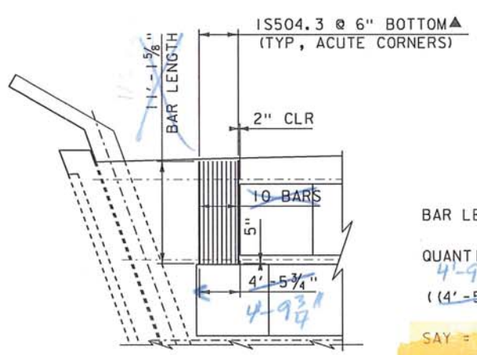

ok. makes sense.

Say 11'-9" Check opposite acute corner as it has a larger over hang (12'-2"-5" = 11'-9")

BAR LENGTH = 11'-1⅝"

QUANTITY:

4'-9¾" 4' 8.96 9.96

((4'-5¾") - (2"))/.5' = 8.62 BARS +1 = 9.62 BARS

SAY = 10 BARS * (2) = 20 BARS

IS505.3 @ 6" BOTTOM
(cut to fit)

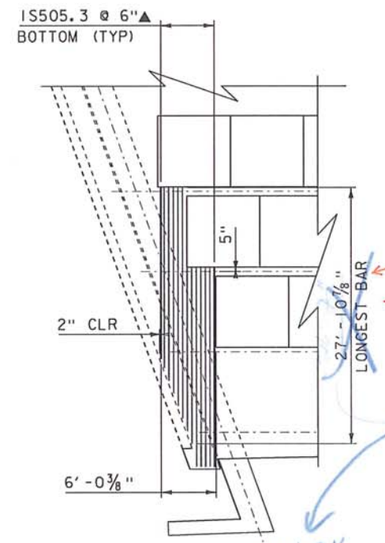

Double checked and the number should be 25'-10"

This number is wrong, but a closer / correct number should be 25'-3".

longest bar is 26'-5"

measured @ 1.5" offset from end of precast deck panel. (longest bar possible while maintaining minimum interior clear.)

LONGEST BAR LENGTH = ~~25'-1⅞"~~ 26'-2" ← ~~26'-5"~~

QUANTITY: 6.3964 12.46 13.46 ← comes out in rounding

((6'-⅜") - (2"))/.5' = 12.73 BARS +1 = 13.73 BARS

SAY = 14 BARS * (2) = 28 BARS ← O.K

IS506.3 @ 6" BOTTOM
(cut to fit)

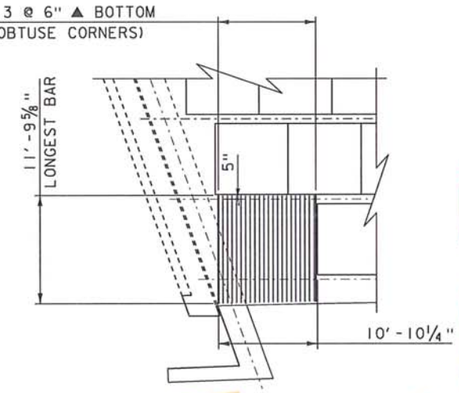

Okay since cut to fit. Still unsure where the 5" past girder web is detailed

added 5" past ℄ Girder dim to deck plan

transverse bottom mat bars extend 5" past girder web and the clear off the fascia is 3". So I believe that 11'-9 5/8" is ok.

LONGEST BAR LENGTH = 11'-9⅝"

Say 11'8" (only 1" of clear between panel and bar)

QUANTITY:

((10'-10¼") - (2"))/.5' = 21.38 BARS +1 = 22.38 BARS

SAY = 23 BARS * (2) = 46 BARS

RMK 12/23/14

NOT TO SCALE

PROJECT NAME: HARTFORD	
PROJECT NUMBER: IM 091-2 (79)	
FILE NAME: sl2al32sup43S_RSQuant.dgn	PLOT DATE: 01-DEC-2014
PROJECT LEADER: K. HIGGINS	DRAWN BY: K. FRIEDLAND
DESIGNED BY: R. KLINEFELTER	CHECKED BY: JDG 12/5/14
SUP 43S REINFORCING QUANTITY 2	SHEET 2 OF 21

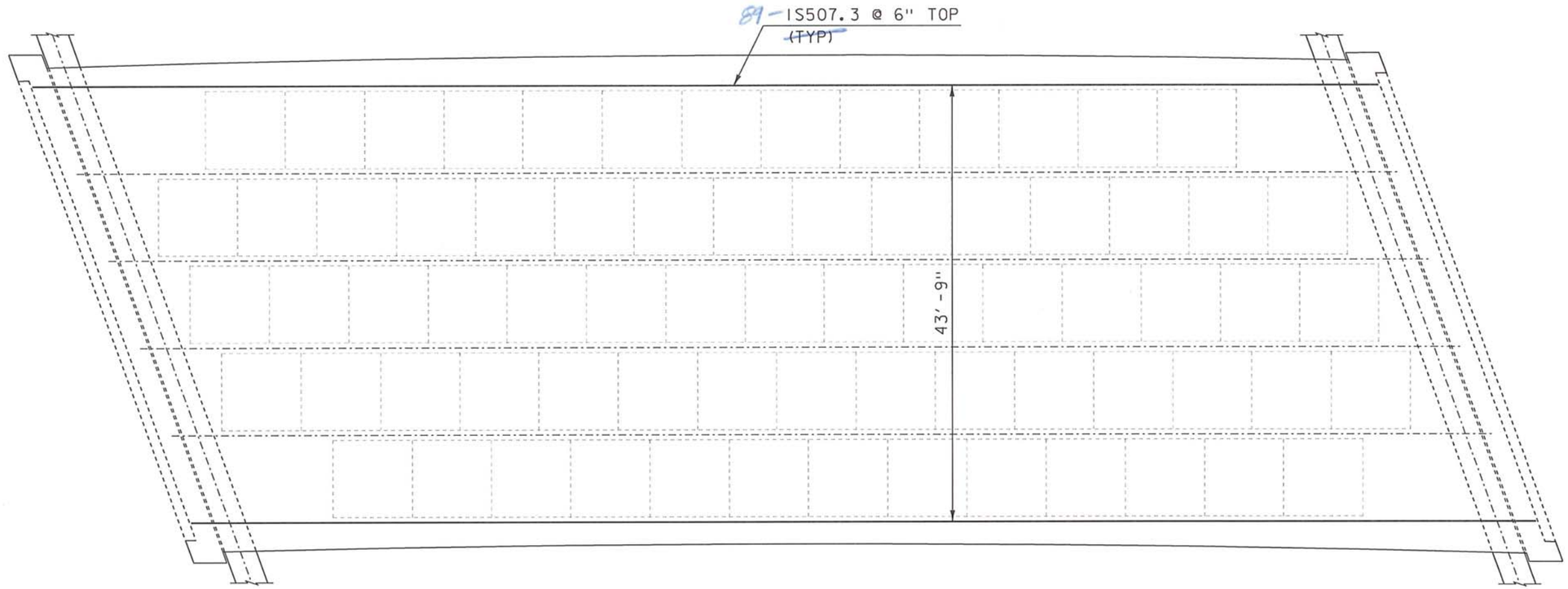

BAR LENGTH = ((136'-1¾")-(2*2")) + (3 SPLICES @ 2'-2") = 142'-2¾"
= SAY 142'-3" / 4 = 4 BARS @ 35'-6¾"
= 4 BARS @ 35'-6¾" EACH

thats what the RSS will round it to anyway.

LOCATION: BARS RUN FROM CENTER OF GIRDER 1 TO GIRDER 6.

QUANTITY:
(43'-9")/.5' = 87.5 BARS +1 = 88.5 BARS

SAY = 89 BARS * 4 = 356 BARS

IS507.3 @ 6" TOP

NOT TO SCALE

RMK 12/23/14

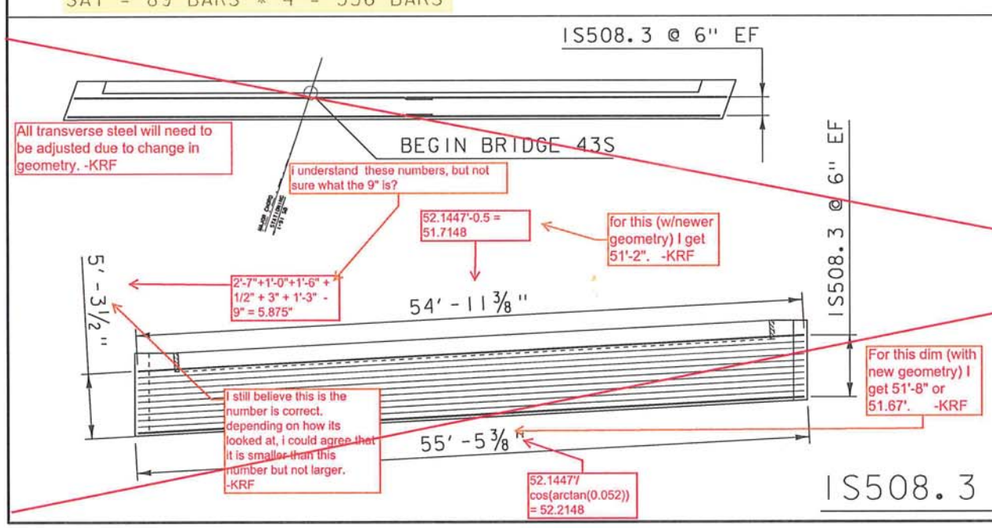

((51.67' - (2 * 3")) + (2'-2") = 53.3334' or 53'-4"
(53.3334) / 2 = 26.6667' or 26' - 8" -KRF

53'-4" -KRF

BAR LENGTH = ((55'-5⅜")-(2*3")) = 54-11⅜" + (1 SPLICES @ 2'-2") = 57'-1⅜"
= SAY = 57'-2" / 2 = 2 BARS @ 28'-7" EACH

26'-8" -KRF

Say 27'-0"

53.88'

LOCATION: BACKWALL EF

SEE BACKWALL CALCS

QUANTITY:

((5'-3½")-(3")) /.5' = 10.08 BARS +1 = 11.08 BARS * 2 = 22.16 BARS

13 Bars

SAY = 23 BARS EF * (2 FACES) = 46 BARS * 2 BACKWALLS = 92 BARS

26 Bars

52 Bars

104 Bars

IS508.3 @ 6" EF

NOT TO SCALE

PROJECT NAME: HARTFORD	
PROJECT NUMBER: IM 091-2 (79)	
FILE NAME: sl2ol32sup43S_RSQuant.dgn	PLOT DATE: 01-DEC-2014
PROJECT LEADER: K. HIGGINS	DRAWN BY: K. FRIEDLAND
DESIGNED BY: R. KLINEFELTER	CHECKED BY: JDG 12/5/14
SUP 43S REINFORCING QUANTITY 3	SHEET 3 OF 21

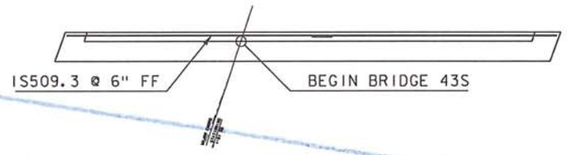

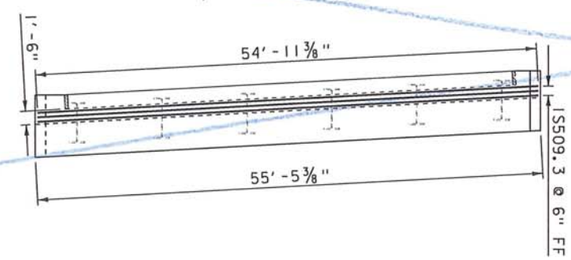

BAR LENGTH = ((55'-5⅜")-(2*3")) = 54-11⅜" + (1 SPLICES @ 2'-2") = 57'-1⅜"
= SAY = 57'-2" / 2 = 2 BARS @ 28'-7" EACH

27'-0"

See my comments for bar #1S508.3

LOCATION: BACKWALL FF

QUANTITY:

(((1'-6")-(2*3"))/.5') = 2 BARS +1 = 3 BARS * 2 = 6 BARS

SAY = 6 BARS FF * 2 BACKWALLS = 12 BARS

1S509.3 @ 6" FF

NOT TO SCALE

SEE BACKWALL CALCS

3'-2" = (3'-2 1/8") - 3" +(5/8") + 1/2(3.75")

LONGEST BAR
180° HOOK

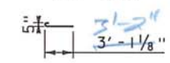

A = 7"
B = 3'-1⅛" 3'-2"
J = 5"

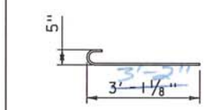

180° HOOK
LONGEST BAR

NOT TO SCALE

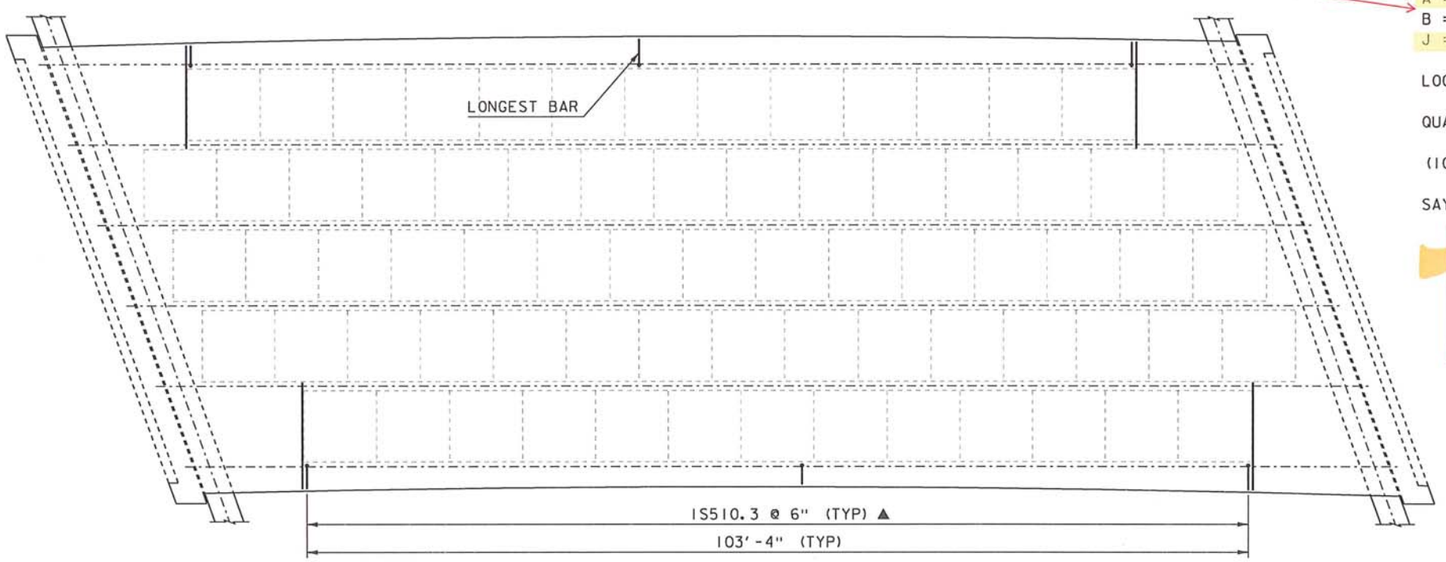

LOCATION: OVERHANG

QUANTITY:

(103'-4")/.5' = 206.67 BARS +1 = 207.67 BARS

SAY = 208 BARS * 2 OVERHANGS = 416 BARS

TYPE 1
QTY = 416
Length = 3'-9"
A = 7"
B = 3'-2"
J = 5"

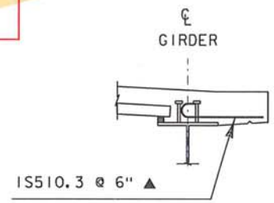

1S510.3 @ 6"
(CUT TO FIT)

NOT TO SCALE

RMK 12/23/14

PROJECT NAME: HARTFORD	
PROJECT NUMBER: IM 091-2 (79)	
FILE NAME: sl2al32sup43S_RSQuant.dgn	PLOT DATE: 01-DEC-2014
PROJECT LEADER: K. HIGGINS	DRAWN BY: K. FRIEDLAND
DESIGNED BY: R. KLINEFELTER	CHECKED BY: JDG 12/5/14
SUP 43S REINFORCING QUANTITY 4	SHEET 4 OF 21

~~IS604.3 @ 6"~~

~~IS511.3 @ 9"~~

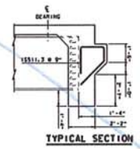

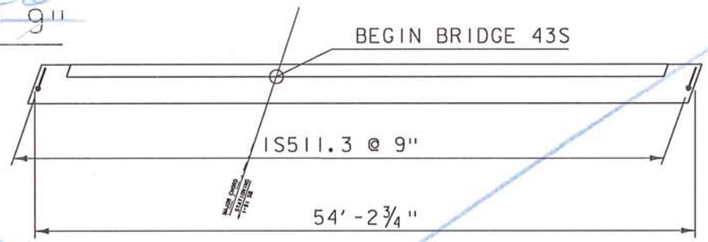

10"

A = 2'-2"
B = 1'-11"
C = 1'-2¼"
D = 2'-7¾"
H = 1'-10½"
K = 1'-11"

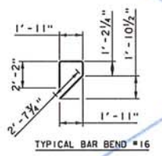

This Bar is still being designed

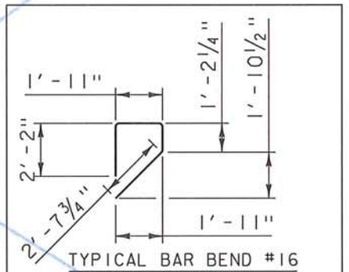

TYPICAL BAR BEND #16
NOT TO SCALE

LOCATION: BACKWALL

QUANTITY:

((54'-2¾")-(2*3"))/ 9" = 71.64 BARS +1 = 72.64 BARS

SAY = 73 BARS * 2 BACKWALLS = 146 BARS

~~DELETED~~

~~IS513.3 @ 9"~~

← this bar was combined w/IS512.3 (now IS511.3)

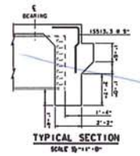

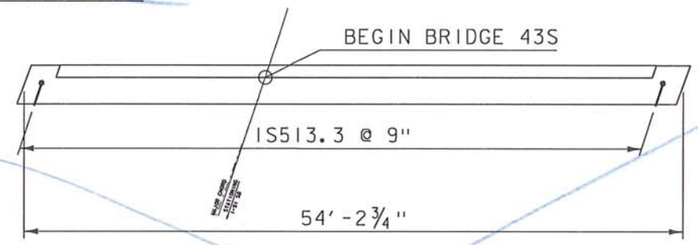

2'-4"

A = 2'-2"
B = 3'-8½"

3'-9"

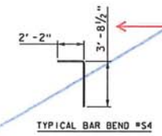

3'-9"

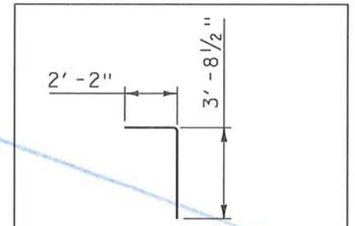

TYPICAL BAR BEND #S4
NOT TO SCALE

LOCATION: BACKWALL

QUANTITY:

((54'-2¾")-(2*3"))/ 9" = 71.64 BARS +1 = 72.64 BARS

SAY = 73 BARS * 2 BACKWALLS = 146 BARS

140 Bars

SEE BACKWALL CALCS

~~IS511.3 @ 6"~~

~~IS512.3 @ 9"~~

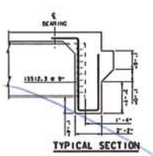

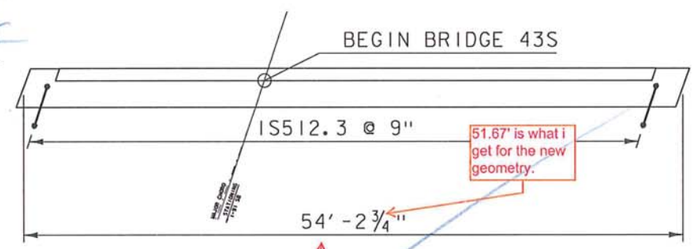

51.67' is what i get for the new geometry.

5'-11"

2'-4"

2'-2" + 2" = 2'-4"

52.1447'

G = 2'-2"
B = 5'-10½"
C = 1'-8"
D = 4'-7"

1'-10"

4'-9"

1'-10"

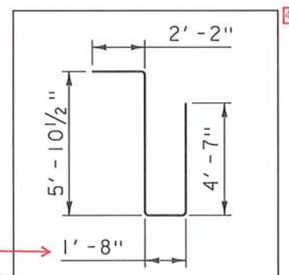

TYPICAL BAR BEND #S5
NOT TO SCALE

LOCATION: BACKWALL

QUANTITY:

(((51.67') - (2 * 3")) / 9") + 1 = 69.22 Bars
Say = 70 (* Back-Walls) = 140 Bars
-KRF

((54'-2¾")-(2*3"))/ 9" = 71.64 BARS +1 = 72.64 BARS

70 Bars

SAY = 73 BARS * 2 BACKWALLS = 146 BARS

140 Bars

~~IS512.3 @ 12"~~

~~IS514.3 @ 9"~~

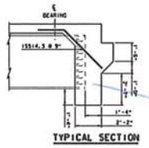

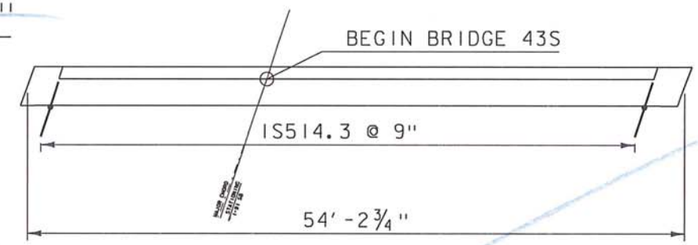

2'-4"

4'-3"

C = 2'-2"
D = 4'-5"
H = 3'-1½"
K = 3'-1½"

3'-0"

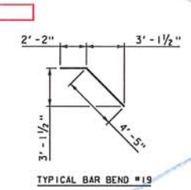

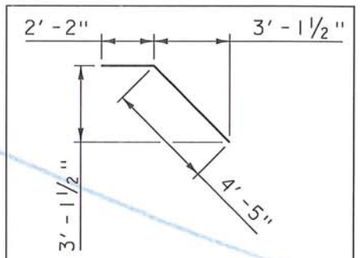

TYPICAL BAR BEND #19
NOT TO SCALE

LOCATION: BACKWALL

QUANTITY:

((54'-2¾")-(2*3"))/ 9" = 71.64 BARS +1 = 72.64 BARS

SAY = 73 BARS * 2 BACKWALLS = 146 BARS

140 Bars

RMK 12/24/14

PROJECT NAME: HARTFORD	
PROJECT NUMBER: IM 091-2 (79)	
FILE NAME: s12a132sup43S_RSQuant.dgn	PLOT DATE: 01-DEC-2014
PROJECT LEADER: K. HIGGINS	DRAWN BY: K. FRIEDLAND
DESIGNED BY: R. KLINEFELTER	CHECKED BY: JDG 12/5/14
SUP 43S REINFORCING QUANTITY 5	SHEET 5 OF 21

ok. should have been: 144' - 5 1/4"

145.69'

L = 138'-3¼" - (2*2") = 137'-11¼" + (3 SPLICES @ 2'-2") = 145'-5¼" 2'-7" 138.2741'-0.33' + 3*(2'-2") = 144'-6" 145.69'

= SAY = 145'-5" / 4 = 4 BARS @ 36'-4¼" 36'-6" 36'-2"

L = 4 BARS @ 36'-4¼" 36'-6" OK 36'-2"

LOCATION: FASCIA TO ℄ OF GIRDER. BOTTOM.

QUANTITY:

MAX OVERHANG (LEFT OFFSET) = 3.0417' +1 7 28

((3.0417') - (3" CLR))/6" = 5.58 BARS = SAY 6 BARS * 4 = 24 BARS

MAX OVERHANG (RIGHT OFFSET) = 3.177' +1 7 28

((3.18') - (3" CLR))/6" = 5.68 BARS = SAY 6 BARS * 4 = 24 BARS

oops. double counted. thanks.

TOTAL = 48 BARS * 2 OVERHANGS = 96 BARS Already accounted for. 48 Bars total

28 X 2 = 56

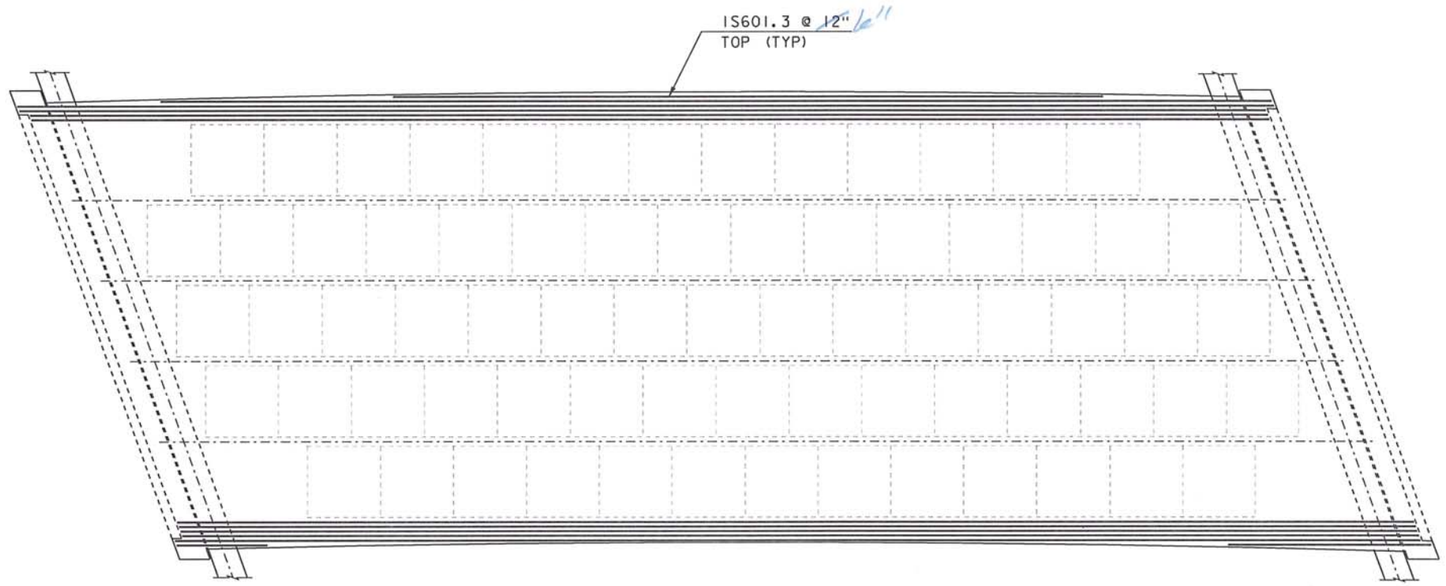

1S601.3 @ 12"
TOP

NOT TO SCALE

RMK 12/24/14

PROJECT NAME: HARTFORD	
PROJECT NUMBER: IM 091-2 (79)	
FILE NAME: s12a132sup43S_RSQuant.dgn	PLOT DATE: 01-DEC-2014
PROJECT LEADER: K. HIGGINS	DRAWN BY: K. FRIEDLAND
DESIGNED BY: R. KLINEFELTER	CHECKED BY JDG 12/5/14
SUP 43S REINFORCING QUANTITY 6	SHEET 6 OF 21

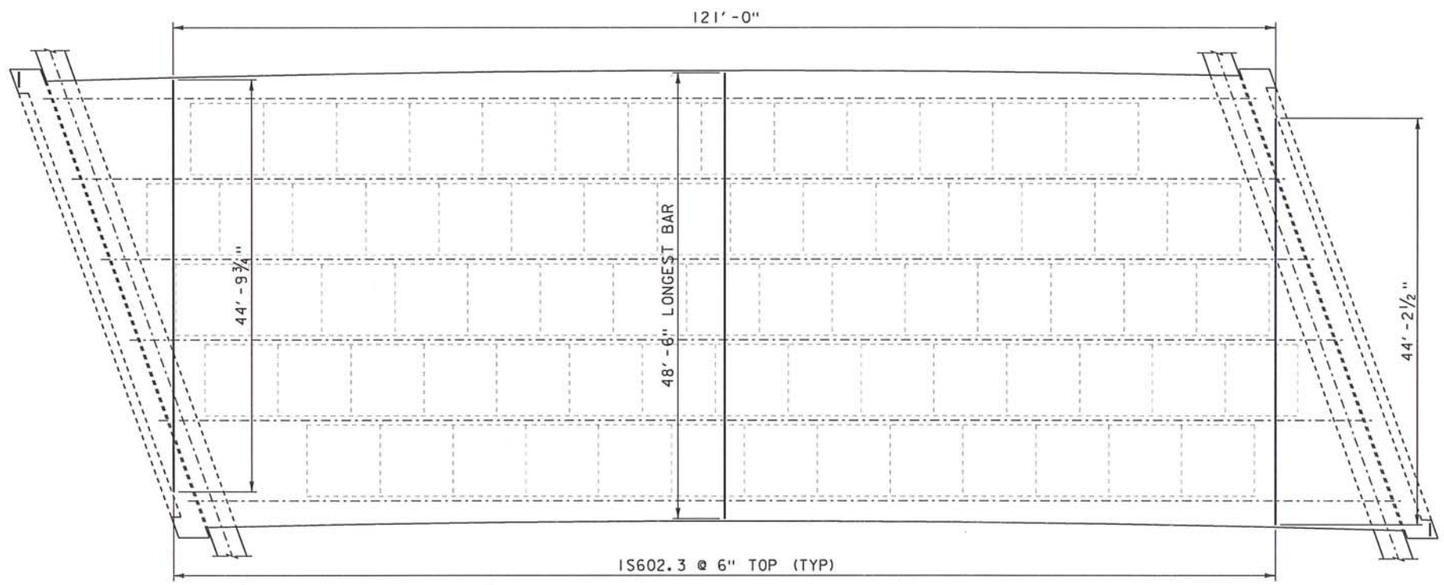

LONGEST BAR LENGTH = 48'-6" + (1 SPLICE @ 2'-7") = 51'-1"
= 51'-1" / 2 = 25'-6½"
= 2 BARS @ 25'-6½"

QUANTITY:

(120'-6")/.5' = 242 BARS +1 = 243 BARS * 2 = 486

SAY = 486 BARS

241

242

OK 484

looks like i added the 1 extra twice.
thanks.

IS602.3 @ 6"
TOP

NOT TO SCALE

RMK 12/24/14

PROJECT NAME: HARTFORD	
PROJECT NUMBER: IM 091-2 (79)	
FILE NAME: sl2al32sup43S_RSQuant.dgn	PLOT DATE: 01-DEC-2014
PROJECT LEADER: K. HIGGINS	DRAWN BY: K. FRIEDLAND
DESIGNED BY: R. KLINEFELTER	CHECKED BY: JDG 12/5/14
SUP 43S REINFORCING QUANTITY 7	SHEET 7 OF 21

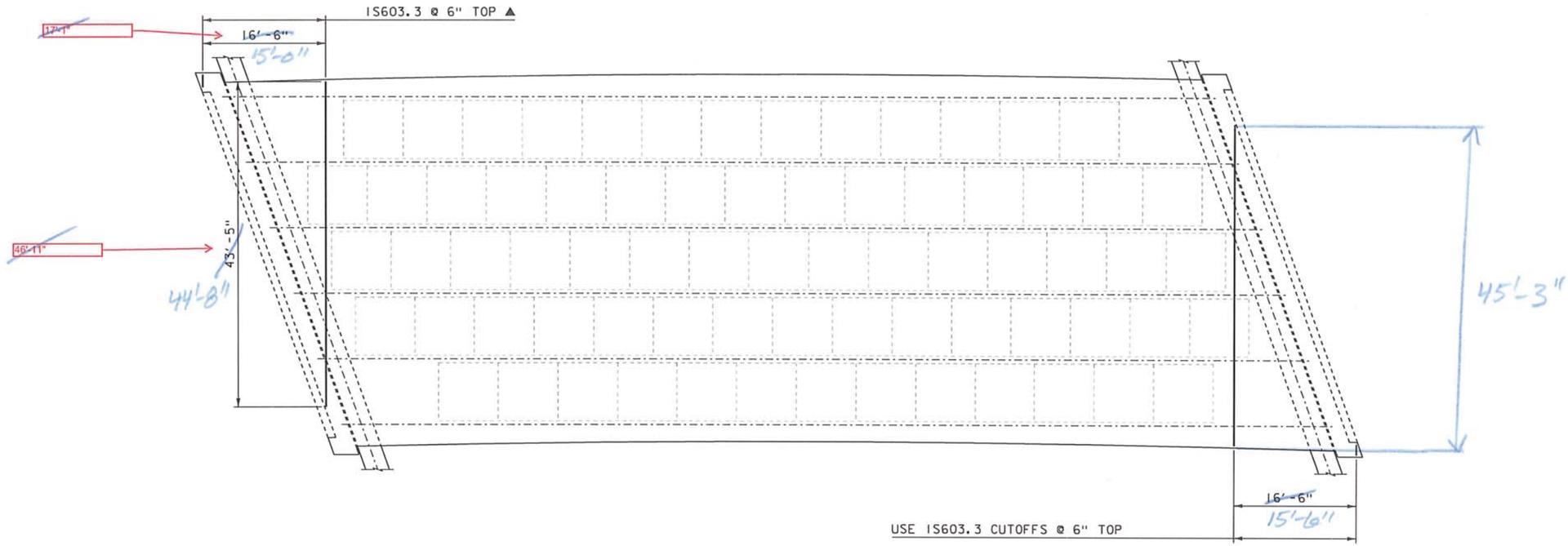

45'-3"

LONGEST BAR LENGTH = 43'-5" + (1 SPLICE @ 2'-7") = 46" 47'-10"
= 46' / 2 = 2 BARS @ 23' EACH
47'-10" 23'-11"

QUANTITY:

Actually should be 33 bars + 1 = 34 bars * 2 = 68 Bars

24'-9"

17'-1" 15'-6"

(16'-6")/.5' = 34 BARS +1 = 35 BARS * 2 = 68 Bars 64

72 bars

31 32

SAY = 70 BARS * 2 SIDES (USE CUTOFFS) = 136 Bars 64

64

72 since cutoffs are being used on other side?

We seem to be in a disagreement over the limits of this bar

Use limits shown on Contract Plans (noted above)

IS603.3 @ 6" TOP
(CUT TO FIT)

NOT TO SCALE

RMK 12/24/14

PROJECT NAME: HARTFORD	
PROJECT NUMBER: IM 091-2 (79)	
FILE NAME: sl2al32sup43S_RSQuant.dgn	PLOT DATE: 01-DEC-2014
PROJECT LEADER: K. HIGGINS	DRAWN BY: K. FRIEDLAND
DESIGNED BY: R. KLINEFELTER	CHECKED BY: JDG 12/5/14
SUP 43S REINFORCING QUANTITY 8	SHEET 8 OF 21

15513.3

This bar changed to ~~1S515.3~~ @ 4".
Needs to be re-calculated. -KRF

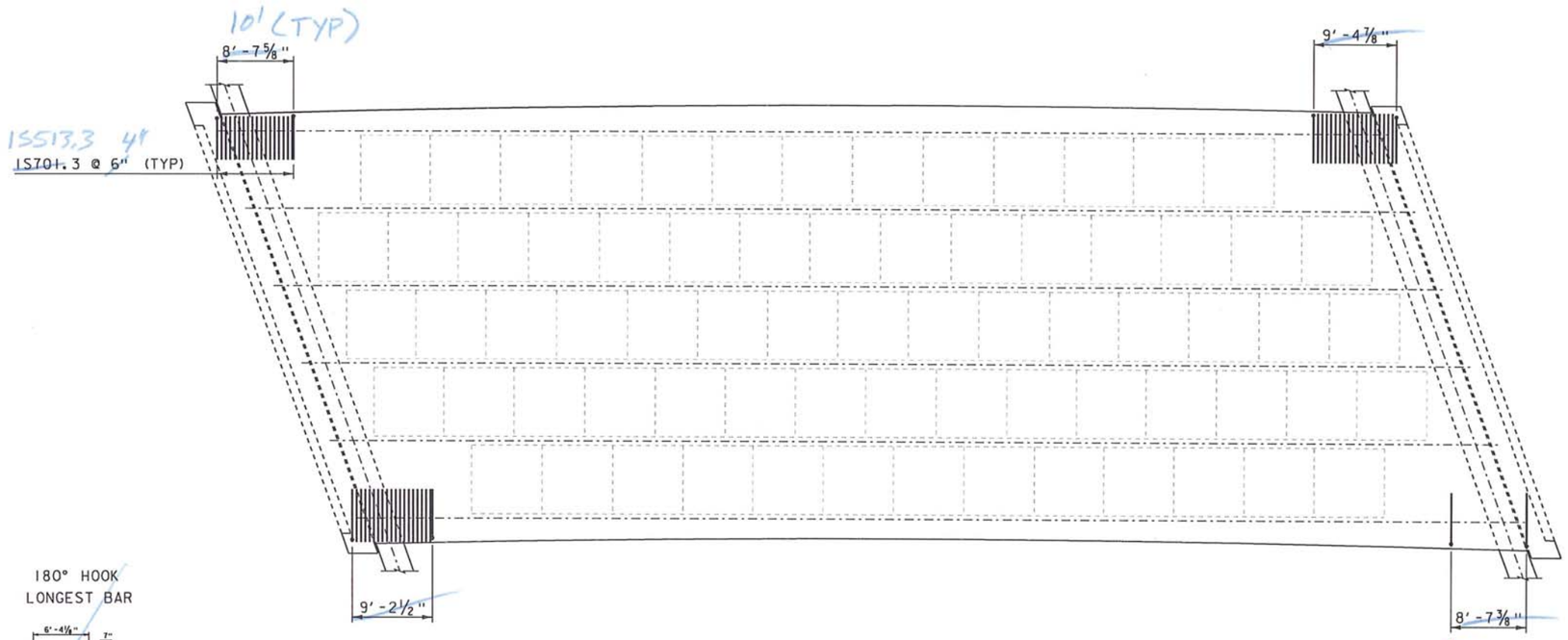

A = 1'-2"
B = 6'-4 1/8"
J = 7"

180° HOOK
LONGEST BAR

LOCATION: OVERHANG

QUANTITY:

@ WW1:
(8'-7 5/8")/.5' = 17.27 BARS +1 = 18.27 BARS
SAY = 19 BARS

@ WW2:
(9'-2 1/2")/.5' = 18.42 BARS +1 = 19.42 BARS
SAY = 20 BARS

@ WW3:
(9'-4 7/8")/.5' = 18.81 BARS +1 = 19.81 BARS
SAY = 20 BARS

@ WW4:
(8'-7 3/8")/.5' = 17.23 BARS +1 = 18.23 BARS
SAY = 19 BARS

TOTAL = 78 BARS

180° HOOK
LONGEST BAR

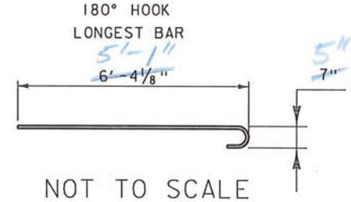

NOT TO SCALE

15513.3
~~1S515.3~~@4"
Level III
TYPE I
A = 7"
B = 3' 2 1/8" + 2'-2" -3" = 5'-1"
J = 5"
Total = 6'-2"
QTY = (10 - 2")/4" + 1 = 31 Bars x 4 = 124 Bars

To simplify call each length of use 10'

G = - - -

15513.3 4"
~~1S701.3~~ @ ~~6"~~

NOT TO SCALE

Bar changed to ~~1S515.3~~@4"
15513.3

RMK 12/29/14

PROJECT NAME: HARTFORD	
PROJECT NUMBER: IM 091-2 (79)	
FILE NAME: sl2ol32sup43S_RSOuant.dgn	PLOT DATE: 01-DEC-2014
PROJECT LEADER: K. HIGGINS	DRAWN BY: K. FRIEDLAND
DESIGNED BY: R. KLINEFELTER	CHECKED BY: JDG 12/5/14
SUP 43S REINFORCING QUANTITY 9	SHEET 9 OF 21

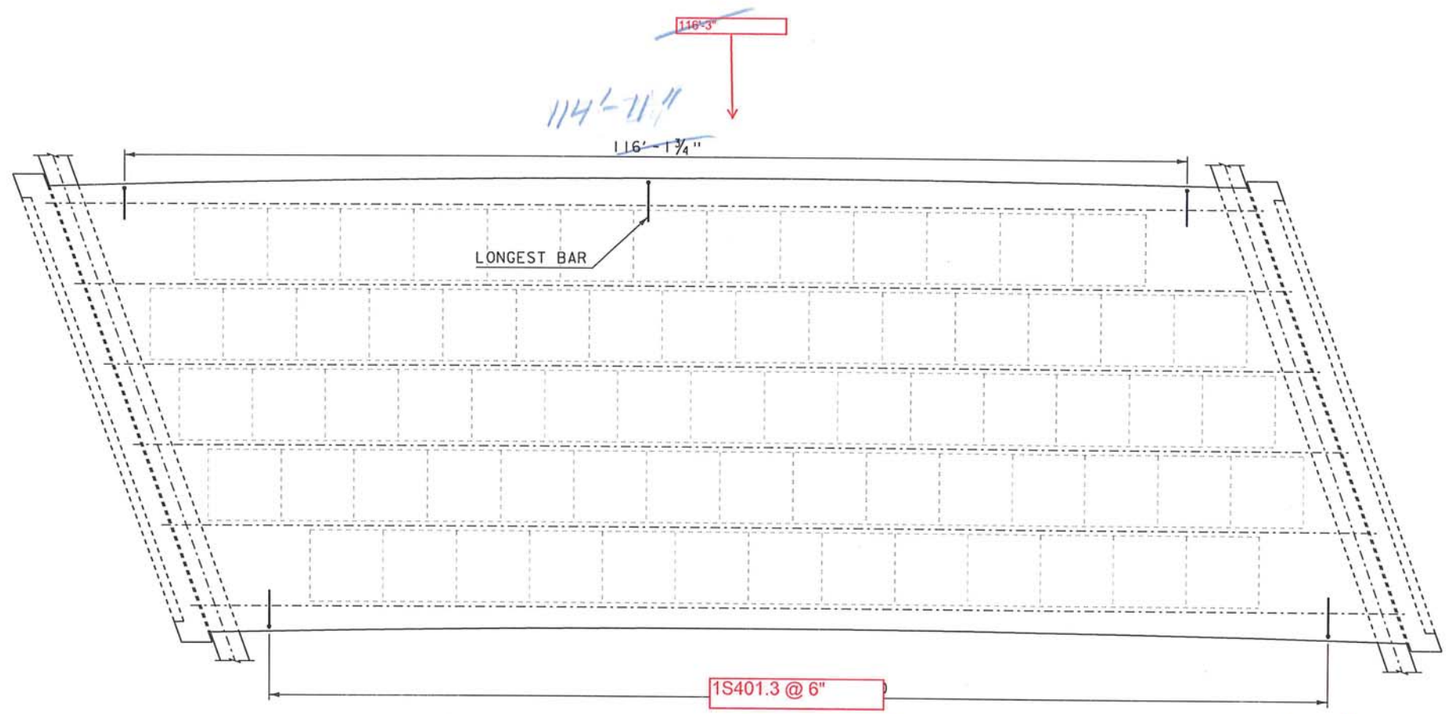

115'-3 1/4" ← 1S513.3 extends 10' from begin/end bridge
6" space between 1S513.3 and start of 1S401.3.

Type 1

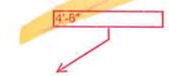

A = 6"
B = 4'-6 1/8"
J = 4"
G = ---
LOCATION: OVERHANG

180° HOOK

LONGEST BAR

QUANTITY:
115'-3 1/4" 230.5 232
(~~116'-1 3/4"~~)/.5' = ~~232.29~~ BARS +1 = ~~233.29~~ BARS

SAY = ~~234~~ BARS * 2 OVERHANGS = ~~468~~ BARS
232 464

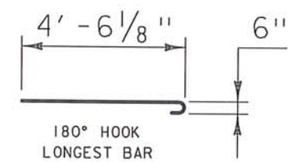

NOT TO SCALE

1S401.3 @ 6"

NOT TO SCALE

RMK 12/29/14

PROJECT NAME: HARTFORD	
PROJECT NUMBER: IM 091-2 (79)	
FILE NAME: sl2al32sup43S_RSQuant.dgn	PLOT DATE: 01-DEC-2014
PROJECT LEADER: K. HIGGINS	DRAWN BY: K. FRIEDLAND
DESIGNED BY: R. KLINEFELTER	CHECKED BY: JDG 12/5/14
SUP 43S REINFORCING QUANTITY 10	SHEET 10 OF 21

Back Checked by: JDG 01/06/15

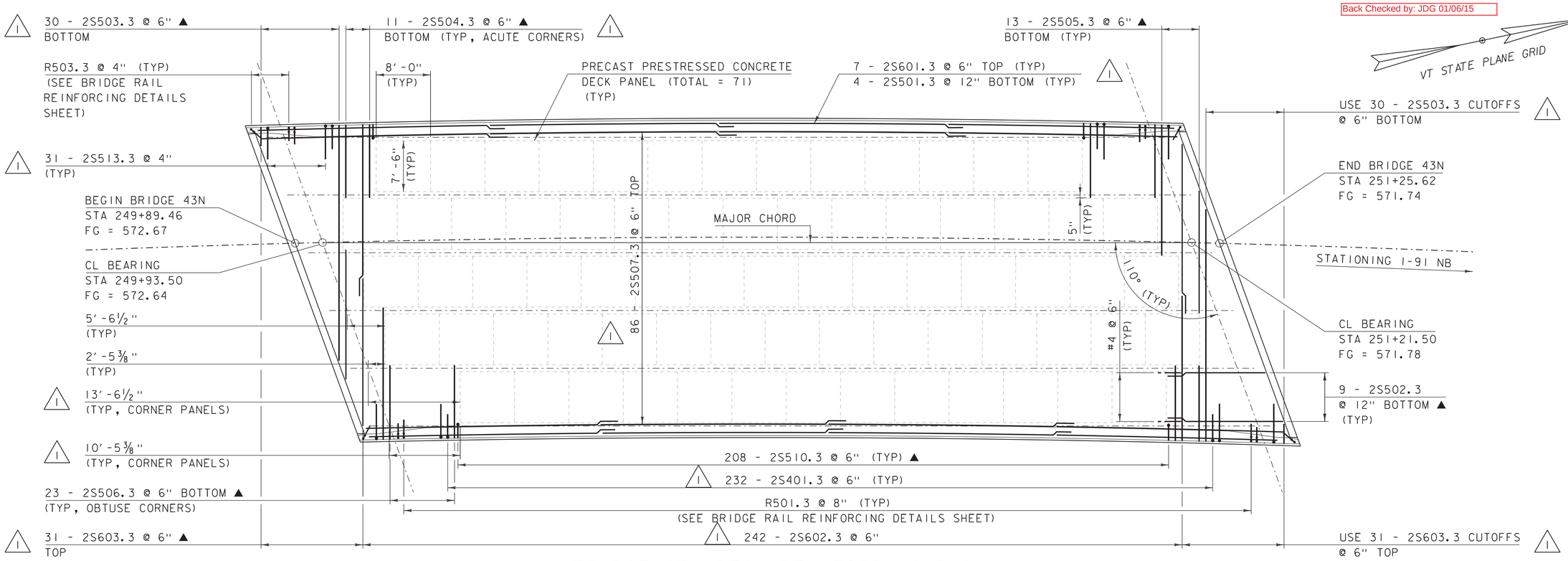

BRIDGE 43N DECK REINFORCING PLAN

SCALE ⅛" = 1'-0"

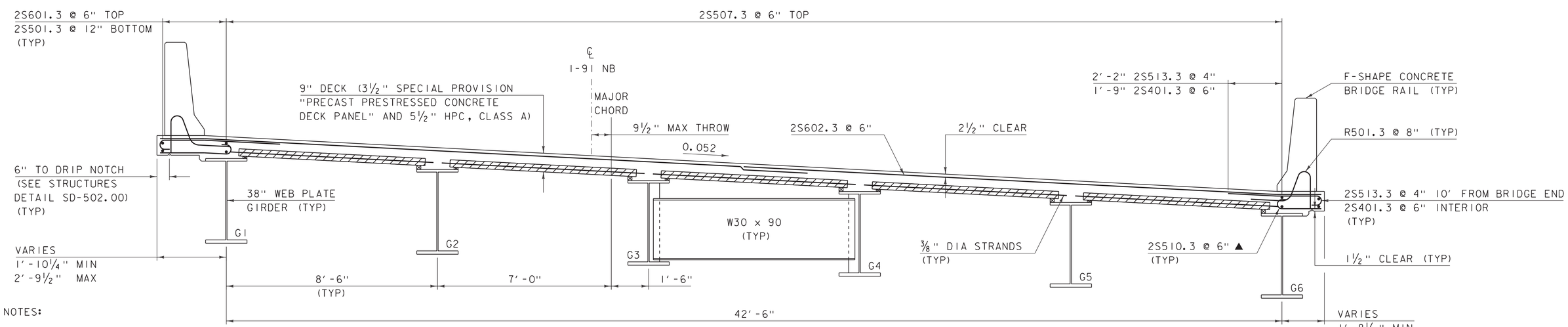

BRIDGE 43N TYPICAL DECK REINFORCEMENT

SCALE ½" = 1'-0"

NOTES:

1) SPLICES FOR TOP TRANSVERSE AND LONGITUDINAL DECK REINFORCING STEEL SHALL NOT BE LOCATED OVER PANEL JOINTS.

2) PRIOR TO PLACING THE DECK CONCRETE, LAITANCE OR OTHER CONTAMINATES THAT WOULD INTERFERE WITH FULL BOND TO THE PANELS SHALL BE REMOVED BY AN APPROVED METHOD PER SECTION 510.12(b)(4).

3) PRIOR TO PLACING THE DECK CONCRETE, THE PRECAST PRESTRESSED CONCRETE DECK PANELS SHALL BE WETTED IN ACCORDANCE WITH SECTION 501.10(d).

REVISION	DATE	DESCRIPTION	BY
1	01-05-2015	REINFORCING STEEL BAR COUNTS AND DIMENSIONS TO DECK PANELS	RK

NOTE:
NF = NEAR FACE
FF = FAR FACE
EF = EACH FACE
▲ = CUT TO FIT IN FIELD
3" CLEAR, UNLESS OTHERWISE SPECIFIED ON THE PLANS.
2'-2" BAR LAP FOR #5 REINFORCING
2'-7" BAR LAP FOR #6 REINFORCING

PROJECT NAME: HARTFORD
PROJECT NUMBER: IM 091-2(79)

FILE NAME: s12a132sup43N.dgn
PROJECT LEADER: K. HIGGINS
DESIGNED BY: R. KLINEFELTER
43N DECK REINFORCING PLAN

PLOT DATE: 05-JAN-2015
DRAWN BY: K. FRIEDLAND
CHECKED BY: R. KLINEFELTER
SHEET 91 OF 166

Back Checked by: JDG 01/06/15

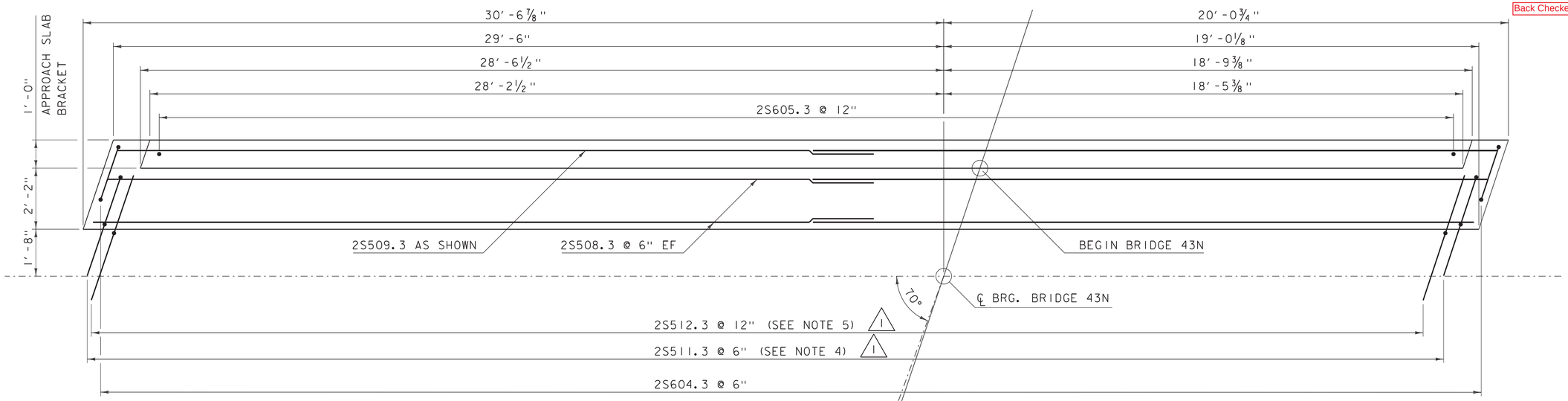

BRIDGE 43N
SUSPENDED BACKWALL 3 PLAN

SCALE 1/2"=1'-0"

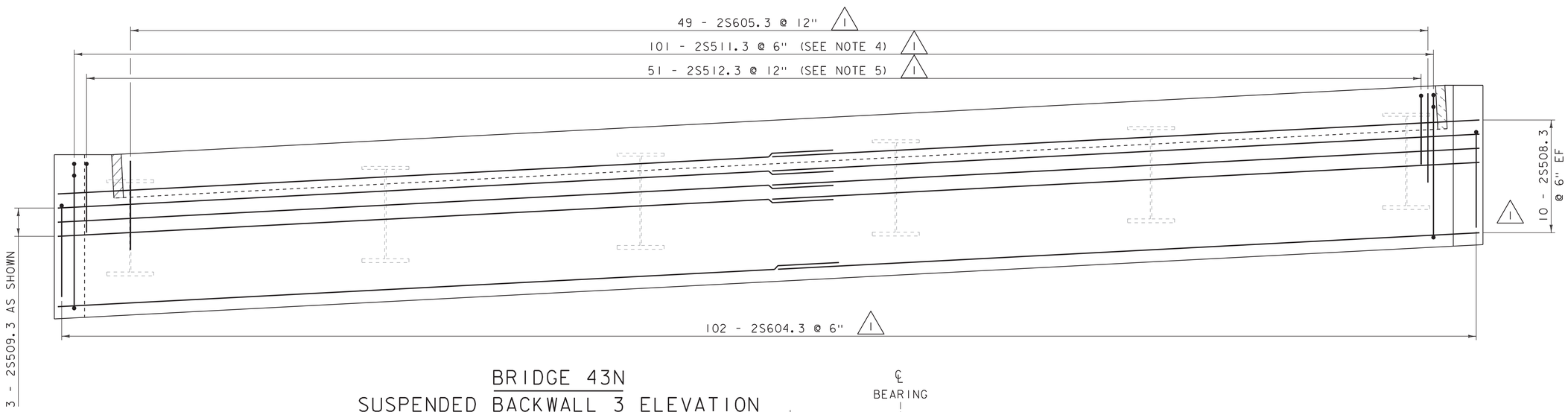

BRIDGE 43N
SUSPENDED BACKWALL 3 ELEVATION

SCALE 1/2"=1'-0"

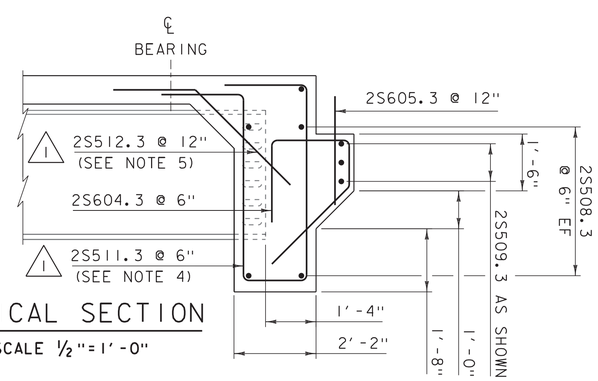

TYPICAL SECTION

SCALE 1/2"=1'-0"

NOTES:

1) BACKWALL 3 SHOWN. BACKWALL 4 SIMILAR.

2) BRIDGE DECK REINFORCING NOT SHOWN FOR CLARITY.

3) A TEMPLATE SHALL BE USED TO LAYOUT 2S605.3 BARS TO ENSURE PROPER ALIGNMENT WITH DUCTS IN APPROACH SLABS.

1 4) AT EACH GIRDER LOCATION, BUNDLE (2) 2S511.3 BARS ON EACH SIDE OF THE GIRDER FLANGE AND OMIT THE (3) 2S511.3 BARS THAT FALL WITHIN THE WIDTH OF THE FLANGE.

1 5) AT EACH GIRDER LOCATION, OMIT (1) 2S512.3 BAR THAT FALLS WITHIN THE WIDTH OF THE FLANGE.

REVISION	DATE	DESCRIPTION	BY
1	01-05-2015	REINFORCING STEEL BAR COUNTS AND NOTES	RK

NOTE:

NF = NEAR FACE
FF = FAR FACE
EF = EACH FACE
▲ = CUT TO FIT IN FIELD
3" CLEAR, UNLESS OTHERWISE SPECIFIED ON THE PLANS.
2'-2" BAR LAP FOR #5 REINFORCING

PROJECT NAME: HARTFORD
PROJECT NUMBER: IM 091-2(79)

FILE NAME: s12a132Backwall43N.dgn
PROJECT LEADER: K. HIGGINS
DESIGNED BY: R. KLINEFELTER
43N SUSPENDED BACKWALL DETAILS

PLOT DATE: 05-JAN-2015
DRAWN BY: K. FRIEDLAND
CHECKED BY: R. KLINEFELTER
SHEET 94 OF 166

STATE OF VERMONT
AGENCY OF TRANSPORTATION

△1 REINFORCING STEEL SCHEDULE

Back Checked by: JDG 01/06/15

ITEM	EACH	SIZE	LENGTH	MARK	TYPE	A	B	C	D	E	F	G	H	J	K	R	O
	32	5	36'- 2"	2S501.3	STR												
▲	90	5	17'- 1"	2S502.3	STR												
▲	30	5	36'- 5"	2S503.3	STR												
✳ ▲	23	5	11'- 1"	2S504.3	STR												
▲	26	5	26'- 0"	2S505.3	STR												
▲	46	5	10'- 11"	2S506.3	STR												
	344	5	35'- 7"	2S507.3	STR												
	80	5	26'- 2"	2S508.3	STR												
	12	5	26'- 2"	2S509.3	STR												
	56	6	36'- 6"	2S601.3	STR												
	484	6	24'- 7"	2S602.3	STR												
✳	63	6	23'- 6"	2S603.3	STR												
	98	6	2'- 10"	2S605.3	STR												
△	466	4	4'- 10"	2S401.3	1	0'- 6"	4'- 4"					---		0'- 4"			
▲	416	5	3'- 4"	2S510.3	1	0'- 7"	2'- 9"					---		0'- 5"			
	202	5	16'- 9"	2S511.3	S5	2'- 5"	5'- 2"	1'- 10"	4'- 11"			2'- 5"					
	102	5	5'- 6"	2S512.3	22		2'- 5"	3'- 1"	---				1'- 9"	---	1'- 9"	---	
	124	5	5'- 4"	2S513.3	1	0'- 7"	4'- 9"					---		0'- 5"			
	204	6	7'- 3"	2S604.3	16	1'- 0"	2'- 1"	1'- 2"	3'- 0"				2'- 1"		2'- 1"		

~ NOTES ~

1. UNLESS OTHERWISE DESIGNATED, ALL BAR REINFORCEMENT FOR CONCRETE IN SIZES UP TO AND INCLUDING NO. 18 SHALL CONFORM TO THE REQUIREMENTS OF THE "SPECIFICATIONS FOR DEFORMED BILLET-STEEL BARS FOR CONCRETE REINFORCEMENT", AASHTO M 31 (ASTM A 615-SI). ALL BARS SHALL BE GRADE 60, UNLESS OTHERWISE DESIGNATED.
2. FOR TYPICAL BENDING DETAILS, RECOMMENDED PIN DIAMETER "D" OF BENDS AND HOOKS, AND OTHER STANDARD PRACTICE, SEE CURRENT CONCRETE REINFORCING STEEL INSTITUTE "MANUAL OF STANDARD PRACTICE".
3. BARS WHICH REQUIRE MORE ACCURATE BENDING THAN STANDARD PRACTICES SHOULD HAVE LIMITS INDICATED.
4. ALL DIMENSIONS ARE OUT TO OUT OF BAR EXCEPT "A" AND "G" ON STANDARD 180 DEGREE AND 135 DEGREE HOOKS.
5. "J" DIMENSION ON 180 DEGREE HOOKS TO BE SHOWN ONLY WHERE NECESSARY TO RESTRICT HOOK SIZE. OTHERWISE, STANDARD HOOKS ARE TO BE USED.
6. "H" DIMENSION ON STIRRUPS TO BE SHOWN ONLY WHEN NECESSARY TO MAINTAIN CLEARANCES.
7. WHERE SLOPE DIFFERS FROM 45 DEGREES, DIMENSIONS "H" AND "K" MUST BE SHOWN.
8. ▲ DENOTES BARS TO BE CUT IN FIELD.
9. ✳ DENOTES ONE EXTRA BAR ADDED FOR TESTING PURPOSES.
10. △ DENOTES TWO EXTRA BARS ADDED FOR TESTING PURPOSES.
11. E IN BAR MARK PREFIX DENOTES EPOXY COATED REINFORCING STEEL.

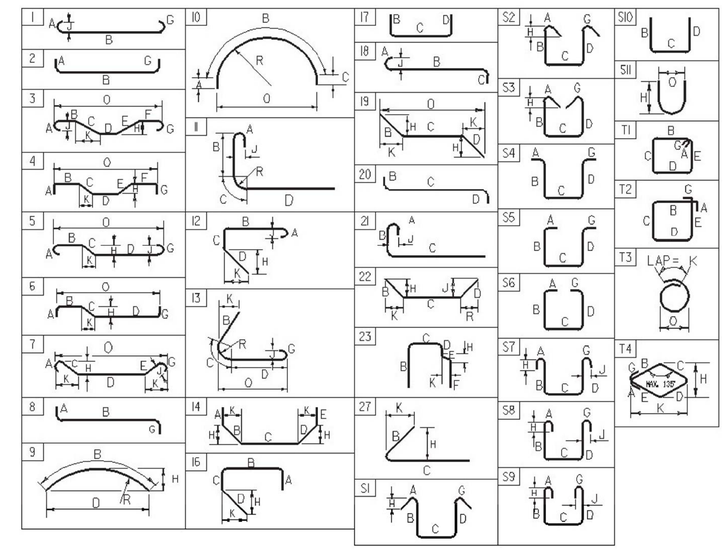

ASTM STANDARD REINFORCING BARS

BAR SIZE DESIGNATION	WEIGHT POUNDS PER FOOT	NOMINAL DIMENSIONS ROUND SECTION		
		DIAMETER INCHES	AREA (INCHES2)	PERIMETER INCHES
#3	0.376	0.375	0.11	1.178
#4	0.668	0.500	0.20	1.571
#5	1.043	0.625	0.31	1.963
#6	1.502	0.750	0.44	2.356
#7	2.04	0.875	0.60	2.749
#8	2.670	1.000	0.79	3.14
#9	3.400	1.13	1.00	3.54
#10	4.3	1.270	1.27	3.990
#11	5.31	1.410	1.56	4.430
#14	7.65	1.69	2.25	5.32
#18	13.60	2.26	4.00	7.09

~ REINFORCING STEEL CORROSION RESISTANCE LEVEL ~

THE REINFORCING STEEL MARKS IN THIS SCHEDULE INDICATE THE REQUIRED BAR CORROSION RESISTANCE LEVEL. CORROSION RESISTANCE LEVEL IS DENOTED WITH A .2 FOR LEVEL TWO SUFFIX OR .3 FOR LEVEL THREE SUFFIX, .1 FOR LEVEL ONE IS TO BE OMITTED. THE BAR MATERIAL TYPE AND BAR STEEL GRADE PROVIDED FOR EACH CORROSION LEVEL WILL BE RECORDED ON THE PLAN SET PI SHEET FOR AS-BUILT RECORD PLAN ARCHIVES.

REVISION	DATE	DESCRIPTION	BY
△1	01-05-2015	REINFORCING STEEL SCHEDULE UPDATE, ADDED TEST BARS	RK

PROJECT NAME: **HARTFORD**
PROJECT NUMBER: **IM 091-2 (79)**

FILE NAME: **s12a132RSS_43N.dgn**
PROJECT MANAGER: **K. HIGGINS**
DESIGNED BY: **R. KLINEFELTER**
RSS SUPERSTRUCTURE 43N

PLOT DATE: **1/5/2015**
DRAWN BY: **K. FRIEDLAND**
CHECKED BY: **J. GRIGAS**
SHEET **126** OF **166**

Back Checked by: JDG 01/06/15

2S501.3 @ 12" BOTTOM

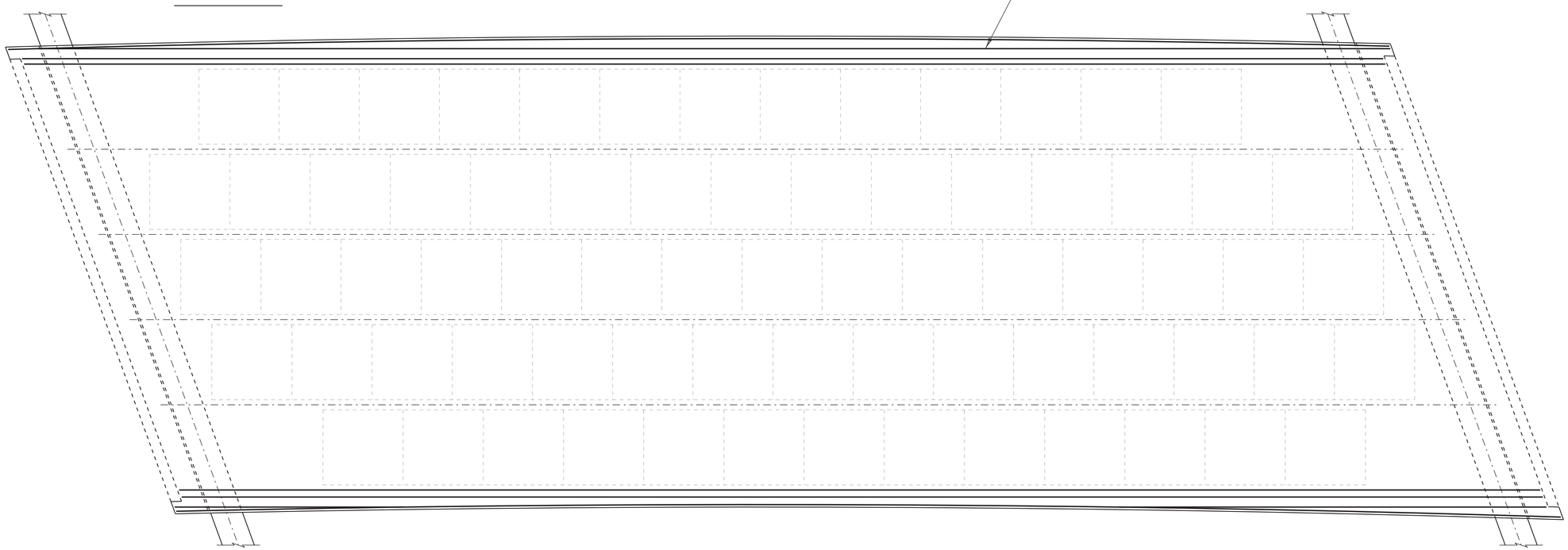

L = 138'-6"-(2*2") = 138'-2" + (3 SPLICES @ 2'-2") = 144'-8"
= SAY = 144'-8" / 4 = 36'- 2"
= 4 BARS @ 36'- 2" EACH

LOCATION: FASCIA TO ℄ OF GIRDER. BOTTOM.

QUANTITY:

MAX OVERHANG (LEFT OFFSET) = 2'-9½"
2.79' -(3" CLR) = (2.54'/1')+1= 3.54 BARS = SAY 4 BARS * 4 = 16 BARS

MAX OVERHANG (RIGHT OFFSET) = 2'-9⅝"
2.80'-(3" CLR) = (2.55'/1')+1= 3.55 BARS = SAY 4 BARS * 4 = 16 BARS

TOTAL = 32 BARS

2S501.3 @ 12" BOTTOM

NOT TO SCALE

PROJECT NAME: HARTFORD	
PROJECT NUMBER: IM 091-2 (79)	
FILE NAME: s12al32sup43N_RSQuant.dgn	PLOT DATE: 05-JAN-2015
PROJECT LEADER: K. HIGGINS	DRAWN BY: K. FRIEDLAND
DESIGNED BY: R. KLINEFELTER	CHECKED BY: R. KLINEFELTER
SUP 43N REINFORCING QUANTITY 1	SHEET 11 OF 21

Back Checked by: JDG 01/06/15

2S502.3 @ 12" BOTTOM
(cut to fit)

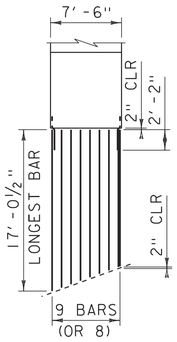

LONGEST BAR = 17.0417'

QUANTITY:

((7.50') - (2*2"))/1' = 7.17 BARS +1 = 8.17 BARS

SAY = 9 BARS * 10 END PANELS = 90 BARS

2S503.3 @ 6" BOTTOM
(cut to fit)

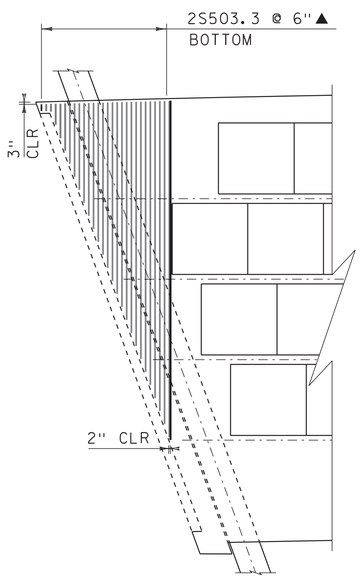

LONGEST BAR = 36'-4¾" (ABUTMENT 2 END)

QUANTITY:

((14'-7") - (2"))/.5' = 28.83 BARS +1 = 29.83 BARS

SAY = 30 BARS (USE CUTOFFS OTHER END)

2S504.3 @ 6" BOTTOM
(CUT TO FIT)

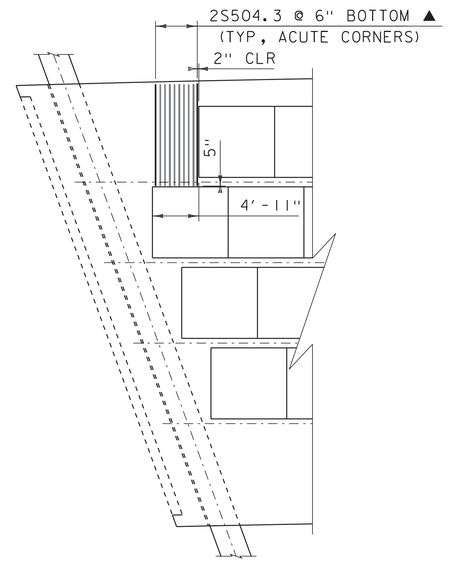

BAR LENGTH = 11'-1" (MAX ABUT#2 END ACUTE CORNER)

QUANTITY:

((4'-11") - (2"))/.5' = 9.16 BARS +1 = 10.16 BARS

SAY = 11 BARS *(2) = 22 BARS

2S505.3 @ 6" BOTTOM
(CUT TO FIT)

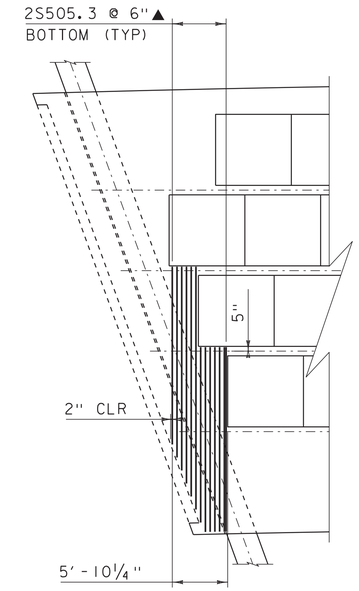

LONGEST BAR LENGTH = 26'-¼"

QUANTITY:

((6'-2¼") - (4"))/.5' = 11.75 BARS +1 = 12.75 BARS

SAY = 13 BARS *(2) = 26 BARS

2S506.3 @ 6" BOTTOM
(CUT TO FIT)

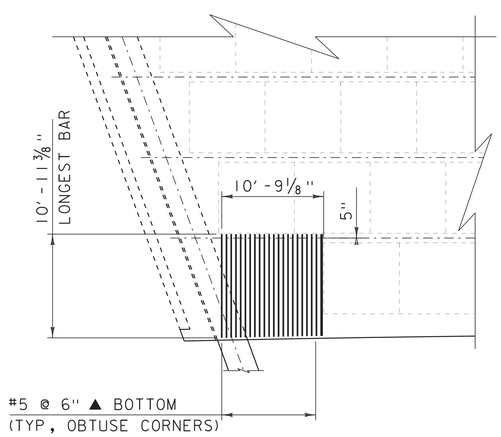

LONGEST BAR LENGTH = 10'-11⅜"

QUANTITY:

((11'-1⅛") - (4"))/.5' = 21.52 BARS +1 = 22.52 BARS

SAY = 23 BARS *(2) = 46 BARS

NOT TO SCALE

PROJECT NAME: HARTFORD	
PROJECT NUMBER: IM 091-2 (79)	
FILE NAME: s12a132sup43N_RSQuant.dgn	PLOT DATE: 05-JAN-2015
PROJECT LEADER: K. HIGGINS	DRAWN BY: K. FRIEDLAND
DESIGNED BY: R. KLINEFELTER	CHECKED BY: R. KLINEFELTER
SUP 43N REINFORCING QUANTITY 2	SHEET 12 OF 21

Back Checked by: JDG 01/06/15

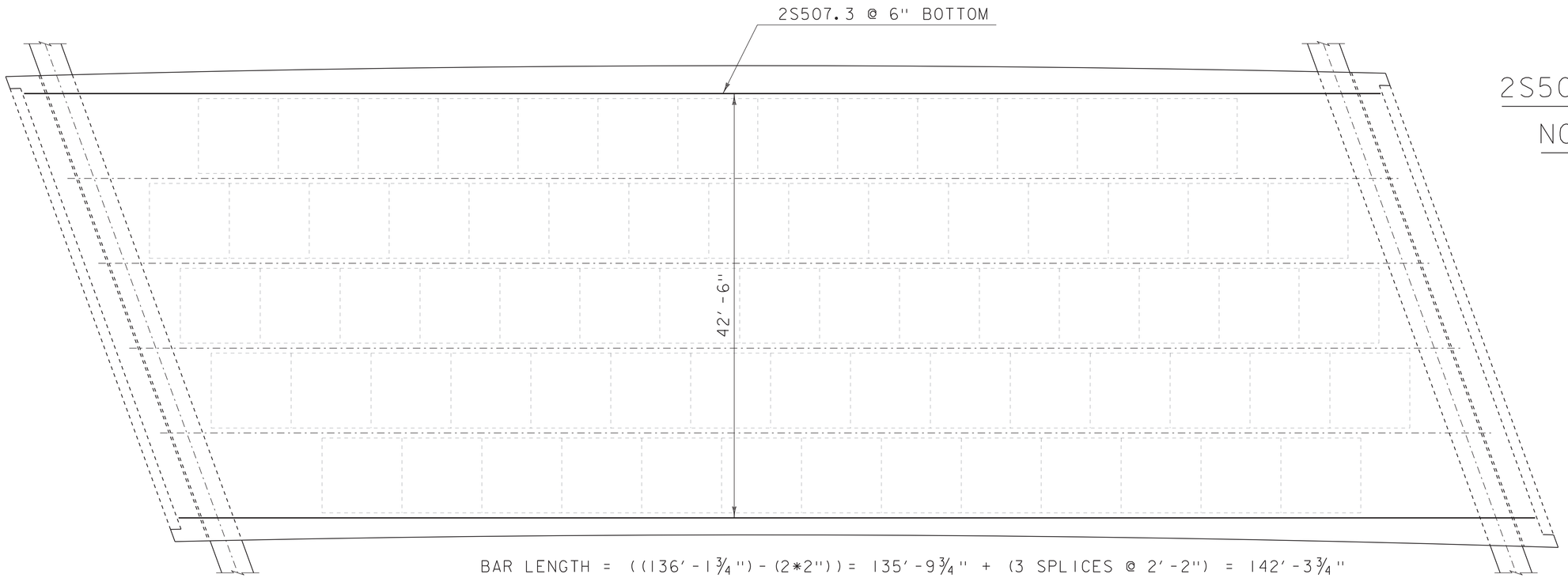

2S507.3 @ 6" TOP

NOT TO SCALE

BAR LENGTH = ((136'-1¾")-(2*2")) = 135'-9¾" + (3 SPLICES @ 2'-2") = 142'-3¾"
= SAY = 142'-4" / 4 = 35'-7"
= 4 BARS @ 35'-7" EACH

LOCATION: BARS RUN FROM CENTER OF GIRDER 1 TO GIRDER 6.

QUANTITY:

(42'-6")/.5' = 85.0 BARS +1 = 86.0 BARS * 4 = 344 BARS

SAY = 344 BARS

SEE BACKWALL CALCS

2S508.3 @ 6" EF

NOT TO SCALE

PROJECT NAME: HARTFORD	
PROJECT NUMBER: IM 091-2 (79)	
FILE NAME: s12a132sup43N_RSQuant.dgn	PLOT DATE: 05-JAN-2015
PROJECT LEADER: K. HIGGINS	DRAWN BY: K. FRIEDLAND
DESIGNED BY: R. KLINEFELTER	CHECKED BY: R. KLINEFELTER
SUP 43N REINFORCING QUANTITY 3	SHEET 13 OF 21

Back Checked by: JDG 01/06/15

2S509.3 @ 6" EF

NOT TO SCALE

SEE BACKWALL CALCS

2S510.3 @ 6" (TYP)

CUT TO FIT

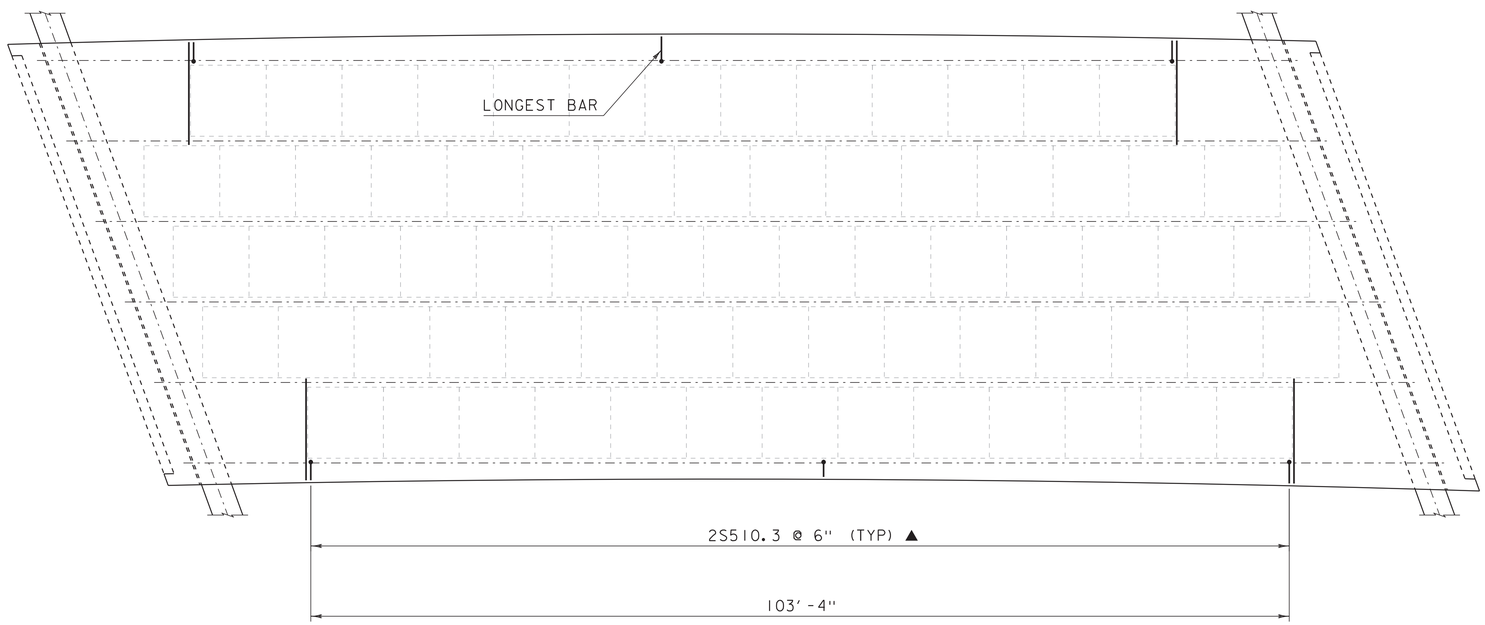

A = 7"
B = 2'-9"
J = 5"

180° HOOK

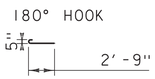

LONGEST BAR

LOCATION: OVERHANG

QUANTITY:

(103'-4")/.5' = 206.67 BARS +1 = 207.67 BARS

SAY = 208 BARS * 2 OVERHANGS = 416 BARS

NOT TO SCALE

PROJECT NAME: HARTFORD	
PROJECT NUMBER: IM 091-2 (79)	
FILE NAME: s12a132sup43N_RSQuant.dgn	PLOT DATE: 05-JAN-2015
PROJECT LEADER: K. HIGGINS	DRAWN BY: K. FRIEDLAND
DESIGNED BY: R. KLINEFELTER	CHECKED BY: R. KLINEFELTER
SUP 43N REINFORCING QUANTITY 4	SHEET 14 OF 21

Back Checked by: JDG 01/06/15

2S604.3 @ 6"

SEE BACKWALL CALCS

2S511.3 @ 6"

SEE BACKWALL CALCS

PROJECT NAME: HARTFORD	
PROJECT NUMBER: IM 091-2 (79)	
FILE NAME: sl2al32sup43N_RSQuant.dgn	PLOT DATE: 05-JAN-2015
PROJECT LEADER: K. HIGGINS	DRAWN BY: K. FRIEDLAND
DESIGNED BY: R. KLINEFELTER	CHECKED BY: R. KLINEFELTER
SUP 43N REINFORCING QUANTITY 5	SHEET 15 OF 21

Back Checked by: JDG 01/06/15

DELETED

2S512.3 @ 12"

SEE BACKWALL CALCS

PROJECT NAME: HARTFORD	
PROJECT NUMBER: IM 091-2 (79)	
FILE NAME: s12a132sup43N_RSQuant.dgn	PLOT DATE: 05-JAN-2015
PROJECT LEADER: K. HIGGINS	DRAWN BY: K. FRIEDLAND
DESIGNED BY: R. KLINEFELTER	CHECKED BY: R. KLINEFELTER
SUP 43N REINFORCING QUANTITY 6	SHEET 16 OF 21

Back Checked by: JDG 01/06/15

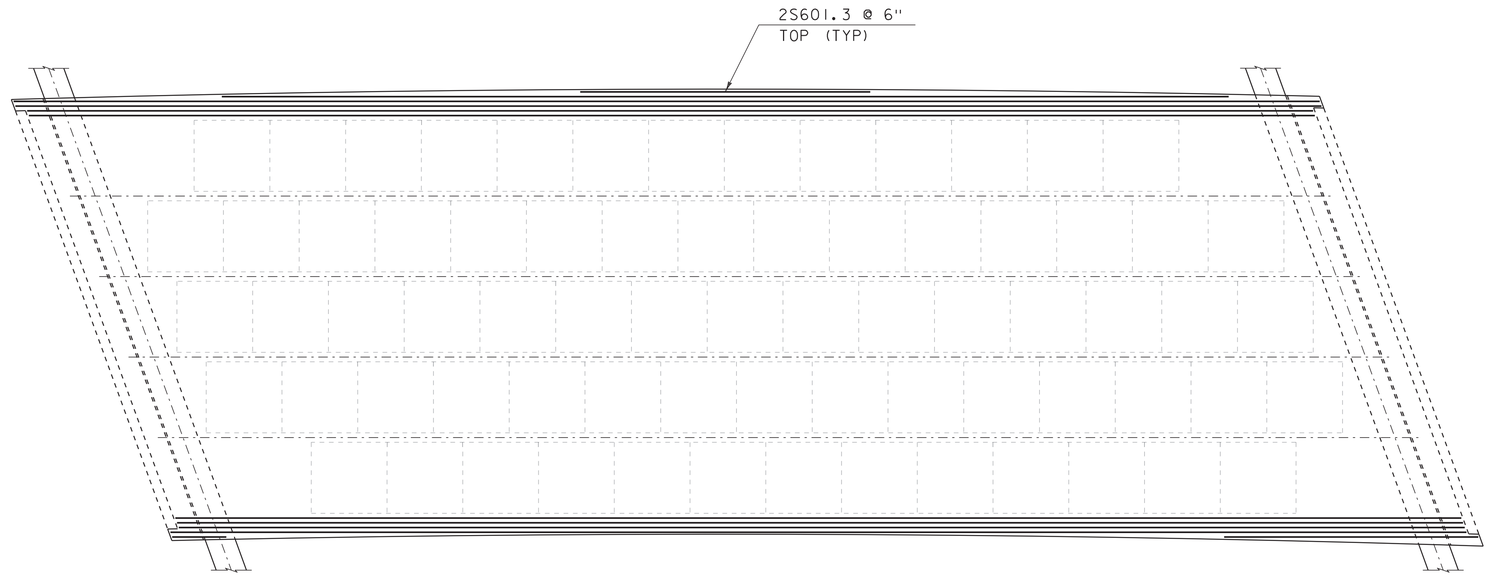

L = 138'-3¼"-(2*2") = 137'-11¼" + (3 SPLICES @ 2'-7") = 145.69'
= SAY = 145.69' / 4 = 36'-6"
= 4 BARS @ 36'-6" EACH

LOCATION: FASCIA TO ℄ OF GIRDER. BOTTOM.

QUANTITY:

MAX OVERHANG (LEFT OFFSET) = 2'-9½"
((2.7917')-(3" CLR))/6" = 5.08 BARS +1 = SAY 7 BARS * 4 = 28 BARS

MAX OVERHANG (RIGHT OFFSET) = 2'-9⅝"
((2.8021')-(3" CLR))/6" = 5.10 BARS +1 = SAY 7 BARS * 4 = 28 BARS

TOTAL = 28 BARS * 2 OVERHANGS = 56 BARS

2S601.3 @ 6" (TOP)

NOT TO SCALE

PROJECT NAME: HARTFORD	
PROJECT NUMBER: IM 091-2 (79)	
FILE NAME: sl2al32sup43N_RSQuant.dgn	PLOT DATE: 05-JAN-2015
PROJECT LEADER: K. HIGGINS	DRAWN BY: K. FRIEDLAND
DESIGNED BY: R. KLINEFELTER	CHECKED BY: R. KLINEFELTER
SUP 43N REINFORCING QUANTITY 7	SHEET 17 OF 21

Back Checked by: JDG 01/06/15

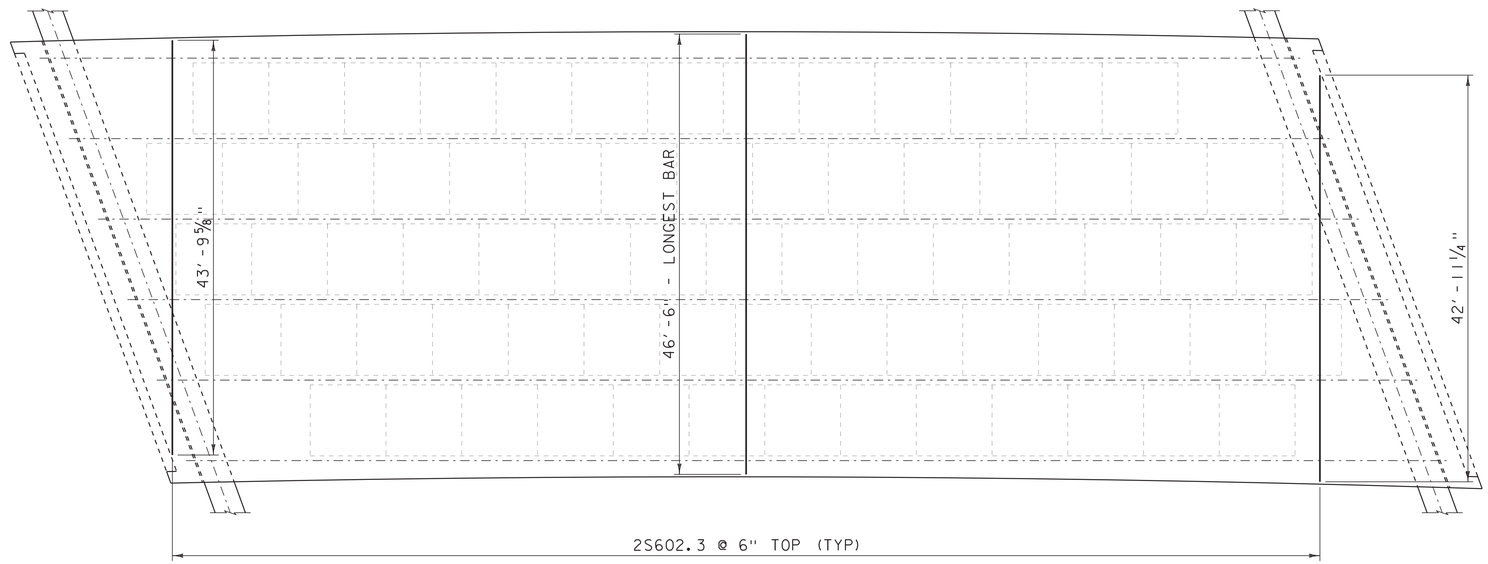

LONGEST BAR LENGTH = 46'-6" + (1 SPLICE @ 2'-7") = 49'-1"
= 49'-1" / 2 = 24'-6½"
= 2 BARS @ 24'-6½" EACH

QUANTITY:

(120'-6")/.5' = 241 BARS +1 = 242 BARS * 2 = 484 BARS

SAY = 484 BARS

2S602.3 @ 6" (TOP)

NOT TO SCALE

PROJECT NAME: HARTFORD	
PROJECT NUMBER: IM 091-2 (79)	
FILE NAME: s12a132sup43N_RSQuant.dgn	PLOT DATE: 05-JAN-2015
PROJECT LEADER: K. HIGGINS	DRAWN BY: K. FRIEDLAND
DESIGNED BY: R. KLINEFELTER	CHECKED BY: R. KLINEFELTER
SUP 43N REINFORCING QUANTITY 8	SHEET 18 OF 21

Back Checked by: JDG 01/06/15

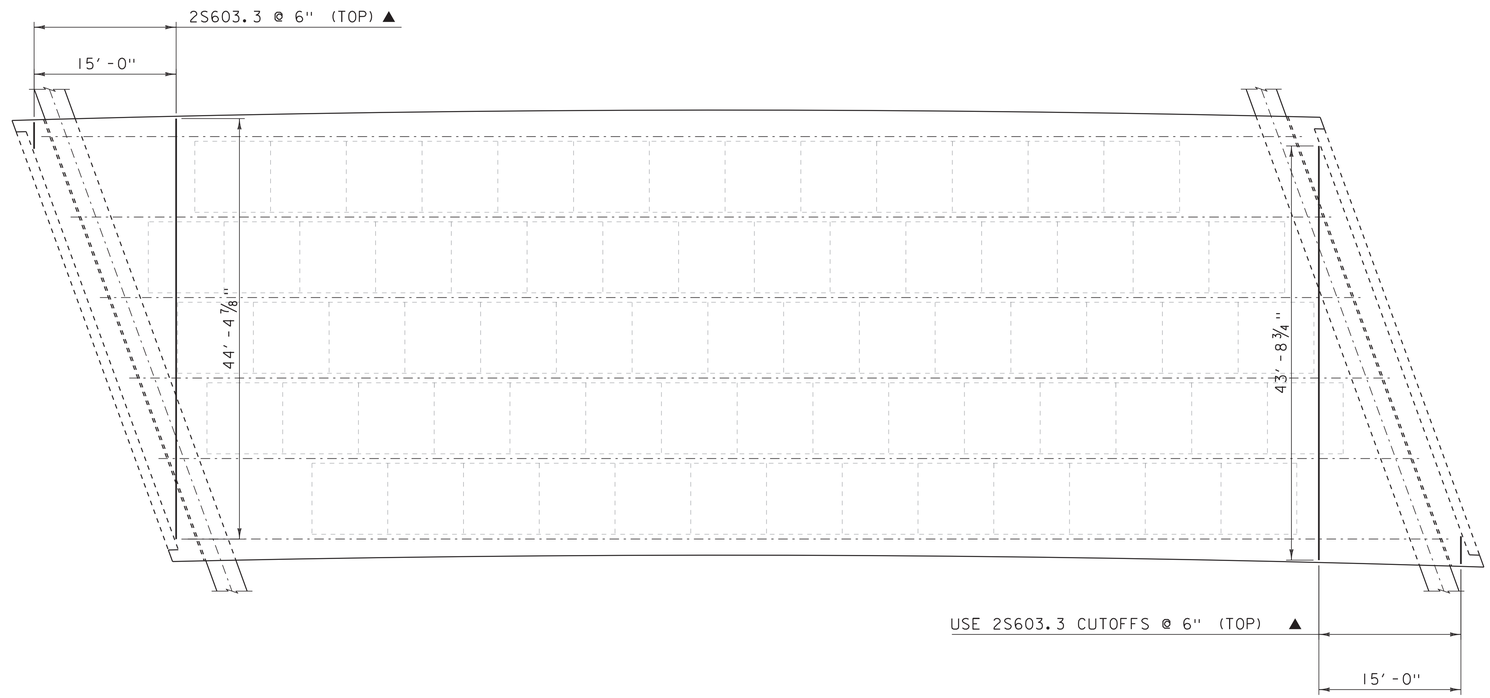

LONGEST BAR LENGTH = 44'-4 7/8" + (1 SPLICE @ 2'-7") = 47'-0"
= SAY = 47'-0" / 2 = 23'-6"
= 2 BARS @ 23'-6" EACH

QUANTITY:

(15'-0")/.5' = 30 BARS +1 = 31 BARS * 2 = 62

SAY = 62 BARS (USE CUTOFFS OTHER END)

2S603.3 @ 6" (TOP)
(CUT TO FIT)
NOT TO SCALE

PROJECT NAME: HARTFORD	
PROJECT NUMBER: IM 091-2 (79)	
FILE NAME: s12a132sup43N_RSQuant.dgn	PLOT DATE: 05-JAN-2015
PROJECT LEADER: K. HIGGINS	DRAWN BY: K. FRIEDLAND
DESIGNED BY: R. KLINEFELTER	CHECKED BY: R. KLINEFELTER
SUP 43N REINFORCING QUANTITY 9	SHEET 19 OF 21

Back Checked by: JDG 01/06/15

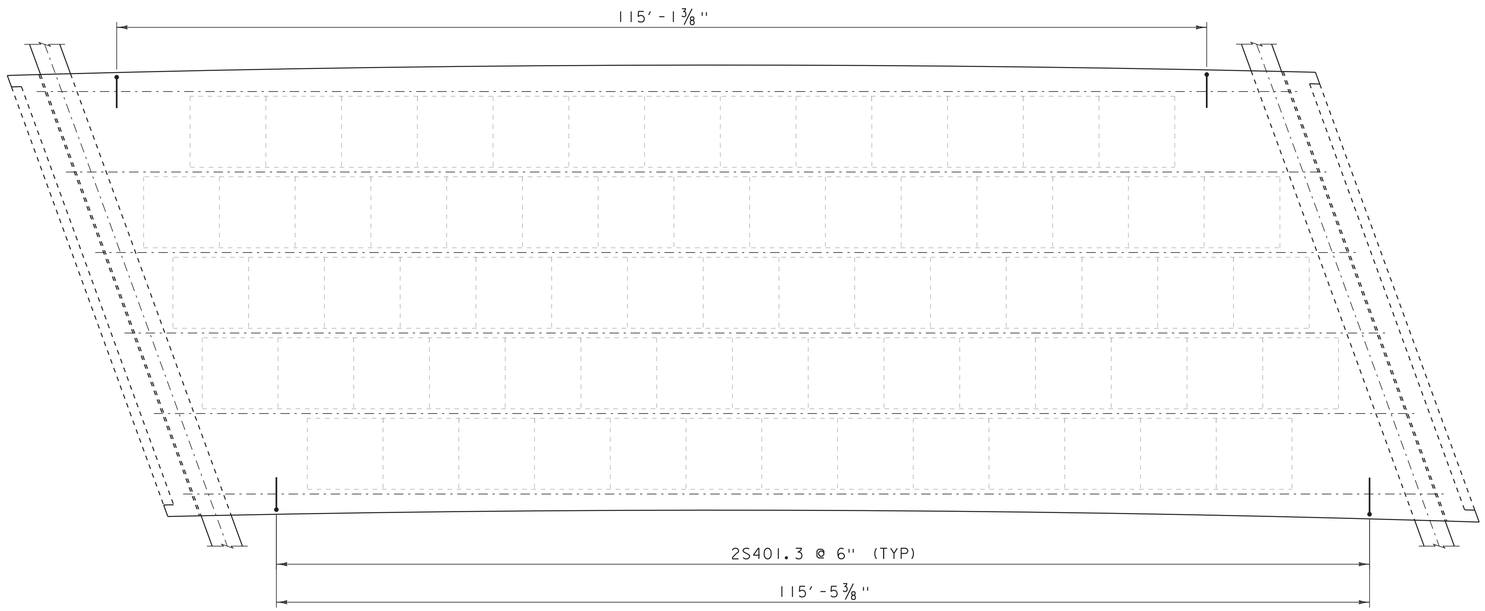

TYPE 1
A = 6″
B = 4′ -3 1/2 ″
J = 4″
G = ---

180° HOOK
LONGEST BAR

LOCATION: OVERHANG

QUANTITY:

(115′ -5 3/8 ″) /.5′ = 230.90 BARS +1 = 231.90 BARS

SAY = 232 BARS * 2 OVERHANGS = 464 BARS

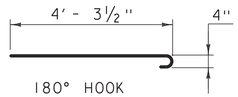

180° HOOK
LONGEST BAR

NOT TO SCALE

2S401.3 @ 6″

NOT TO SCALE

PROJECT NAME: HARTFORD	
PROJECT NUMBER: IM 091-2 (79)	
FILE NAME: s12a132sup43N_RSQuant.dgn	PLOT DATE: 05-JAN-2015
PROJECT LEADER: K. HIGGINS	DRAWN BY: K. FRIEDLAND
DESIGNED BY: R. KLINEFELTER	CHECKED BY: R. KLINEFELTER
SUP 43N REINFORCING QUANTITY 10	SHEET 20 OF 21

Back Checked by: JDG 01/06/15

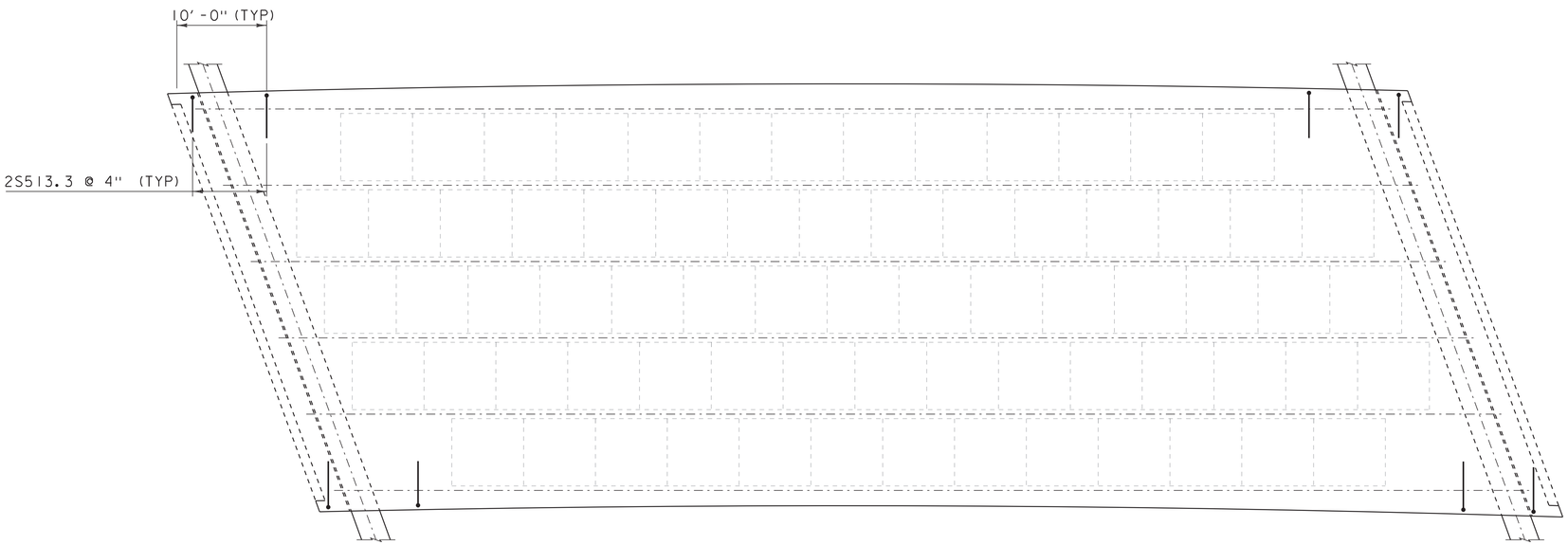

A = 7"
B = 4'- 9"
J = 5"

LONGEST BAR
180° HOOK

LOCATION: OVERHANG

QUANTITY:

(10'-2")/4" = 29.5 BARS +1 = 30.5 BARS
SAY = 31 BARS

TOTAL = 31 BARS * 4 CORNERS = SAY = 124

2S513.3 @ 4"

NOT TO SCALE

PROJECT NAME: HARTFORD	
PROJECT NUMBER: IM 091-2 (79)	
FILE NAME: s12a132sup43N_RSQuant.dgn	PLOT DATE: 05-JAN-2015
PROJECT LEADER: K. HIGGINS	DRAWN BY: K. FRIEDLAND
DESIGNED BY: R. KLINEFELTER	CHECKED BY: R. KLINEFELTER
SUP 43N REINFORCING QUANTITY II	SHEET 21 OF 21

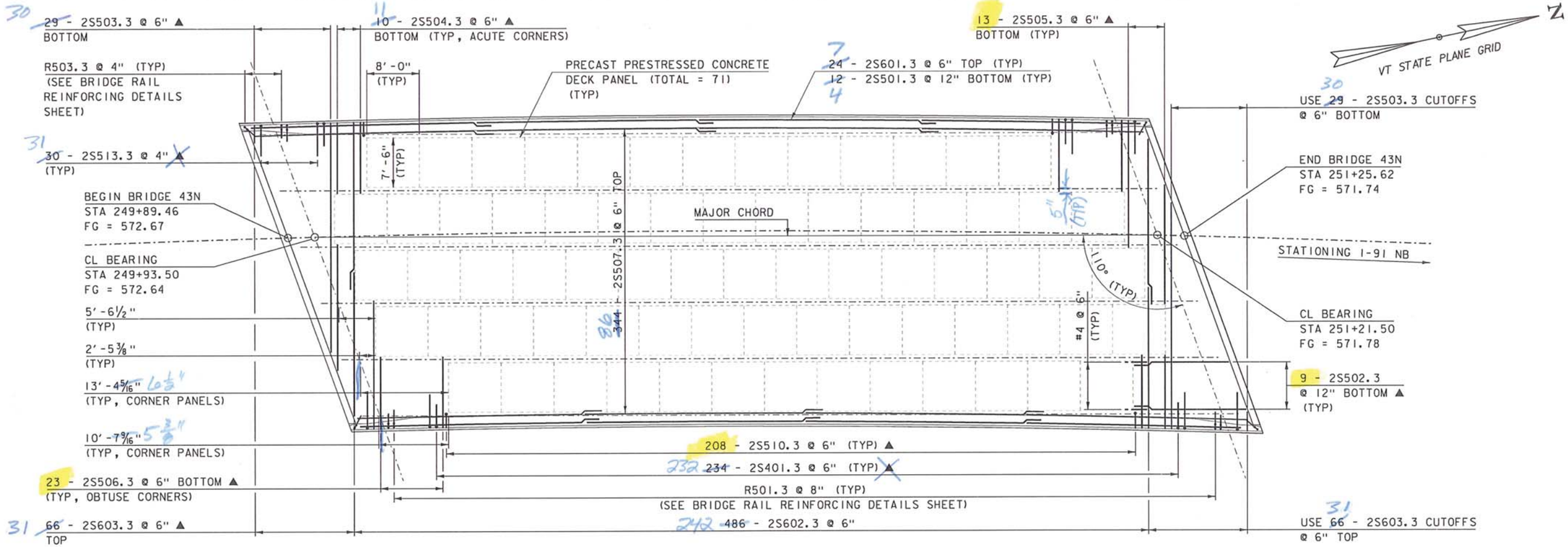

BRIDGE 43N DECK REINFORCING PLAN

SCALE ⅛" = 1'-0"

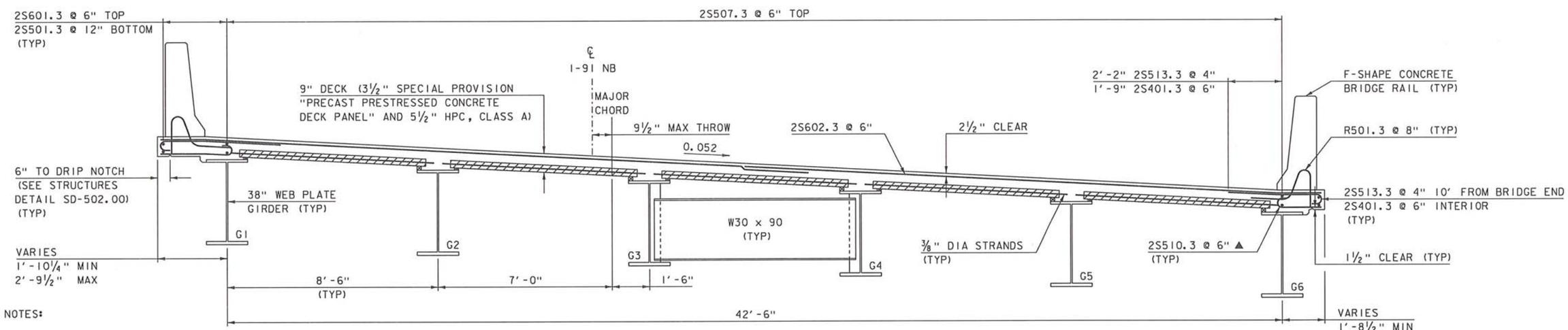

NOTES:

1) SPLICES FOR TOP TRANSVERSE AND LONGITUDINAL DECK REINFORCING STEEL SHALL NOT BE LOCATED OVER PANEL JOINTS.

2) PRIOR TO PLACING THE DECK CONCRETE, LAITANCE OR OTHER CONTAMINATES THAT WOULD INTERFERE WITH FULL BOND TO THE PANELS SHALL BE REMOVED BY AN APPROVED METHOD PER SECTION 510.12 (b) (4).

3) PRIOR TO PLACING THE DECK CONCRETE, THE PRECAST PRESTRESSED CONCRETE DECK PANELS SHALL BE WETTED IN ACCORDANCE WITH SECTION 501.10 (d).

BRIDGE 43N TYPICAL DECK REINFORCEMENT

SCALE ½" = 1'-0"

NOTE:
NF = NEAR FACE
FF = FAR FACE
EF = EACH FACE
▲ = CUT TO FIT IN FIELD
3" CLEAR, UNLESS OTHERWISE SPECIFIED ON THE PLANS.
2'-2" BAR LAP FOR #5 REINFORCING
2'-7" BAR LAP FOR #6 REINFORCING

RMK 12/24/14

PROJECT NAME: HARTFORD	
PROJECT NUMBER: IM 091-2(79)	
FILE NAME: sl2al32sup43N.dgn	PLOT DATE: 15-DEC-2014
PROJECT LEADER: K. HIGGINS	DRAWN BY: K. FRIEDLAND
DESIGNED BY: R. KLINEFELTER	CHECKED BY: R. KLINEFELTER
43N DECK REINFORCING PLAN	SHEET 91 OF 166

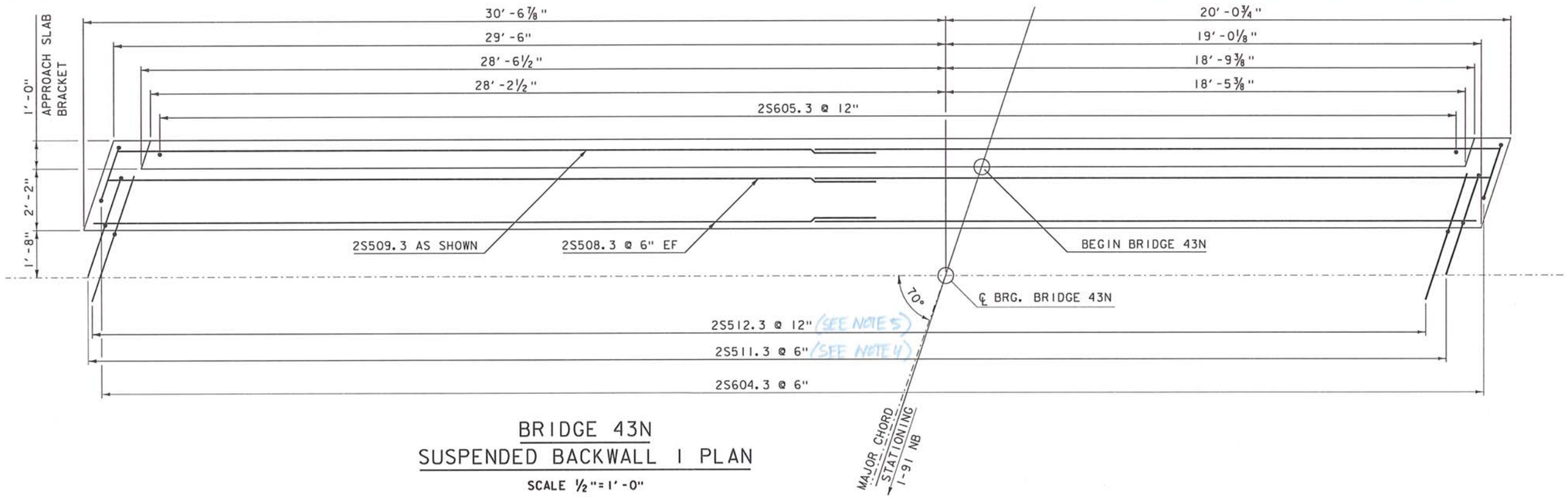

BRIDGE 43N
SUSPENDED BACKWALL 1 PLAN

SCALE 1/2" = 1'-0"

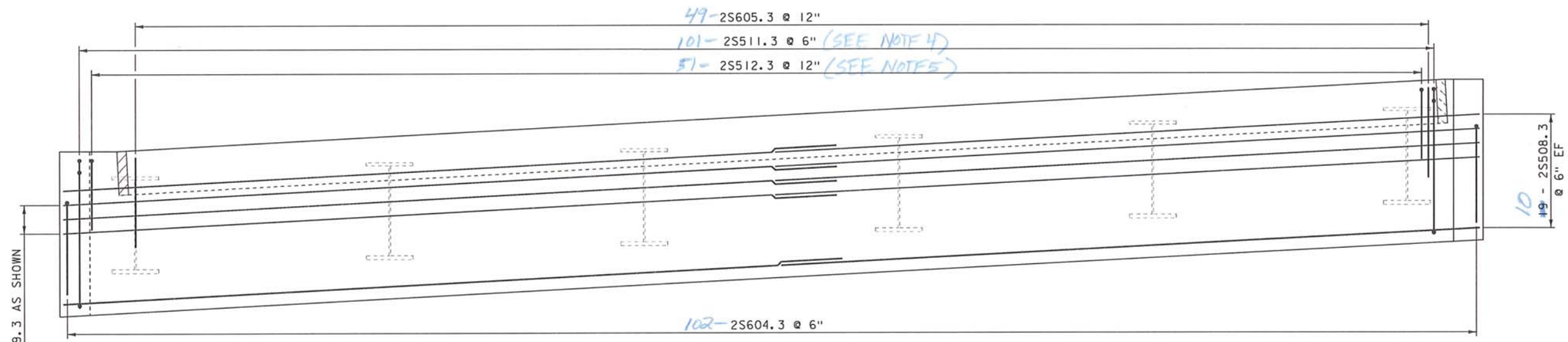

BRIDGE 43N
SUSPENDED BACKWALL 1 ELEVATION

SCALE 1/2" = 1'-0"

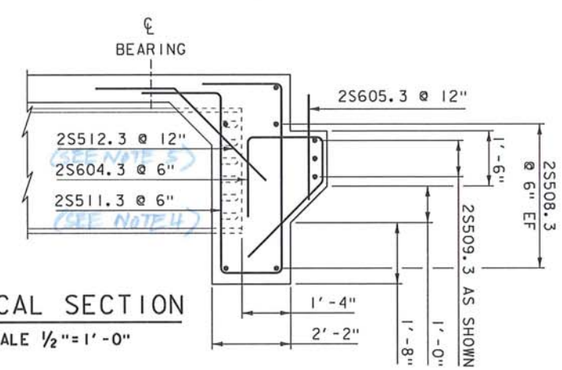

TYPICAL SECTION

SCALE 1/2" = 1'-0"

NOTE:

NF = NEAR FACE
FF = FAR FACE
EF = EACH FACE
▲ = CUT TO FIT IN FIELD
3" CLEAR, UNLESS OTHERWISE SPECIFIED ON THE PLANS.
2'-2" BAR LAP FOR #5 REINFORCING

RMK 12/24/14

NOTES:

1) BACKWALL 1 SHOWN. BACKWALL 2 SIMILAR.

2) BRIDGE DECK REINFORCING NOT SHOWN FOR CLARITY.

3) A TEMPLATE SHALL BE USED TO LAYOUT 2S605.3 BARS TO ENSURE PROPER ALIGNMENT WITH DUCTS IN APPROACH SLABS.

4) " SB w/ 25 bar #

5) " SB w/ 25 bar #

PROJECT NAME: HARTFORD	
PROJECT NUMBER: IM 091-2(79)	
FILE NAME: s12a132Backwall43N.dgn	PLOT DATE: 15-DEC-2014
PROJECT LEADER: K. HIGGINS	DRAWN BY: K. FRIEDLAND
DESIGNED BY: R. KLINEFELTER	CHECKED BY: R. KLINEFELTER
43N SUSPENDED BACKWALL DETAILS	SHEET 94 OF 166

STATE OF VERMONT
AGENCY OF TRANSPORTATION

REINFORCING STEEL SCHEDULE

ITEM	EACH	SIZE	LENGTH	MARK	TYPE	A	B	C	D	E	F	G	H	J	K	R	O
	468	4	5'- 0"	2S401.3	STR	0'- 8"	4'- 4"							6"			
	24	5	36'- 5"	2S501.3	STR												
▲	90	5	17'- 1"	2S502.3	STR												
▲	29	5	36'- 4"	2S503.3	STR												
▲	20	5	10'- 9"	2S504.3	STR												
▲	26	5	27'- 0"	2S505.3	STR												
▲	46	5	10'- 11"	2S506.3	STR												
	356	5	35'- 7"	2S507.3	STR	2'-9"											
	76	5	27'- 8"	2S508.3	STR												
	12	5	27'- 6"	2S509.3	STR												
▲	416	5	3'- 5"	2S510.3	1	7"	2'- 10"							5"			
	140	5	7'- 11"	2S511.3	55	2'- 2"	1'- 11"	1'- 2"	2'- 8"				1'- 11"		1'- 11"		
	140	5	13'- 4"	2S512.3	22		5'- 11"	1'- 8"	3'- 7"			2'- 2"					
	140	5	5'- 11"	2S513.3		2'- 2"	3'- 9"										
	140	5	5'- 9"	2S514.3				2'- 2"	4'- 7"				3'- 3"		3'- 3"		
	48	6	36'- 4"	2S601.3	STR												
	486	6	24'- 7"	2S602.3	STR												
	66	6	22'- 7"	2S603.3	STR												
▲	78	7	6'- 8"	2S701.3		10"	5'- 10"							7"			
	124	5	5'-4"	2S515.3	1	7"	4'-9"							5"			
				2S513.3													
	204	6		2S604.3	11a	1'-0"	2'-7"	1'-2"	3'-6"				2'-1"		2'-1"		
	48	6	2'-10"	2S605.3	STR												

ITEM	EACH	SIZE	LENGTH	MARK	TYPE	A	B	C	D	E	F	G	H	J	K	R	O
						2'-5"	5'-3"	1'-10"	4'-11"			2'-5"					
							2'-5"	3'-1"	---					1'-9"	---	1'-9"	---

Add Test Bars

~ NOTES ~

1. UNLESS OTHERWISE DESIGNATED, ALL BAR REINFORCEMENT FOR CONCRETE IN SIZES UP TO AND INCLUDING NO. 18 SHALL CONFORM TO THE REQUIREMENTS OF THE "SPECIFICATIONS FOR DEFORMED BILLET-STEEL BARS FOR CONCRETE REINFORCEMENT", AASHTO M 31 (ASTM A 615-SI). ALL BARS SHALL BE GRADE 60, UNLESS OTHERWISE DESIGNATED.
2. FOR TYPICAL BENDING DETAILS, RECOMMENDED PIN DIAMETER "D" OF BENDS AND HOOKS, AND OTHER STANDARD PRACTICE, SEE CURRENT CONCRETE REINFORCING STEEL INSTITUTE "MANUAL OF STANDARD PRACTICE".
3. BARS WHICH REQUIRE MORE ACCURATE BENDING THAN STANDARD PRACTICES SHOULD HAVE LIMITS INDICATED.
4. ALL DIMENSIONS ARE OUT TO OUT OF BAR EXCEPT "A" AND "G" ON STANDARD 180 DEGREE AND 135 DEGREE HOOKS.
5. "J" DIMENSION ON 180 DEGREE HOOKS TO BE SHOWN ONLY WHERE NECESSARY TO RESTRICT HOOK SIZE. OTHERWISE, STANDARD HOOKS ARE TO BE USED.
6. "H" DIMENSION ON STIRRUPS TO BE SHOWN ONLY WHEN NECESSARY TO MAINTAIN CLEARANCES.
7. WHERE SLOPE DIFFERS FROM 45 DEGREES, DIMENSIONS "H" AND "K" MUST BE SHOWN.
8. ▲ DENOTES BARS TO BE CUT IN FIELD.
9. ✳ DENOTES ONE EXTRA BAR ADDED FOR TESTING PURPOSES.
10. △ DENOTES TWO EXTRA BARS ADDED FOR TESTING PURPOSES.
11. E IN BAR MARK PREFIX DENOTES EPOXY COATED REINFORCING STEEL.

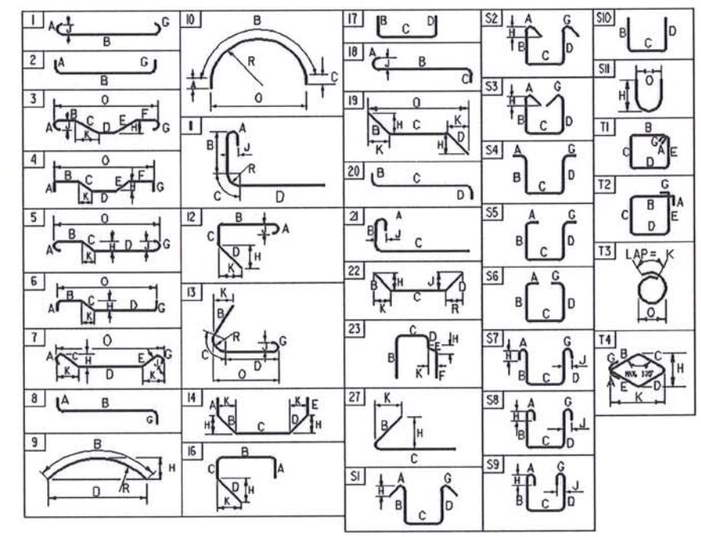

ASTM STANDARD REINFORCING BARS

BAR SIZE designation	NOMINAL weight pounds per foot	NOMINAL DIMENSIONS round sections diameter inches	area square inches	perimeter inches
#3	0.376	0.375	0.11	1.178
#4	0.668	0.500	0.20	1.571
#5	1.043	0.625	0.31	1.963
#6	1.502	0.750	0.44	2.356
#7	2.04	0.875	0.60	2.749
#8	2.670	1.000	0.79	3.14
#9	3.400	1.13	1.00	3.54
#10	4.3	1.270	1.27	3.990
#11	5.31	1.410	1.56	4.430
#14	7.65	1.69	2.25	5.32
#18	13.60	2.26	4.00	7.09

~ REINFORCING STEEL CORROSION RESISTANCE LEVEL ~

THE REINFORCING STEEL MARKS IN THIS SCHEDULE INDICATE THE REQUIRED BAR CORROSION RESISTANCE LEVEL. CORROSION RESISTANCE LEVEL IS DENOTED WITH A .2 FOR LEVEL TWO SUFFIX OR .3 FOR LEVEL THREE SUFFIX, .1 FOR LEVEL ONE IS TO BE OMITTED. THE BAR MATERIAL TYPE AND BAR STEEL GRADE PROVIDED FOR EACH CORROSION LEVEL WILL BE RECORDED ON THE PLAN SET PI SHEET FOR AS-BUILT RECORD PLAN ARCHIVES.

RMK 12/31/14

PROJECT NAME: HARTFORD
PROJECT NUMBER: IM 091-2 (79)

FILE NAME: s12a132_Sup43S_RSS.dgn
PROJECT MANAGER: K. HIGGINS
DESIGNED BY: W. LAMMER
REINFORCING STEEL SCHEDULE SUPER 43N

PLOT DATE: 11/26/2014
DRAWN BY: K. FRIEDLAND
CHECKED BY: W. LAMMER
SHEET OF

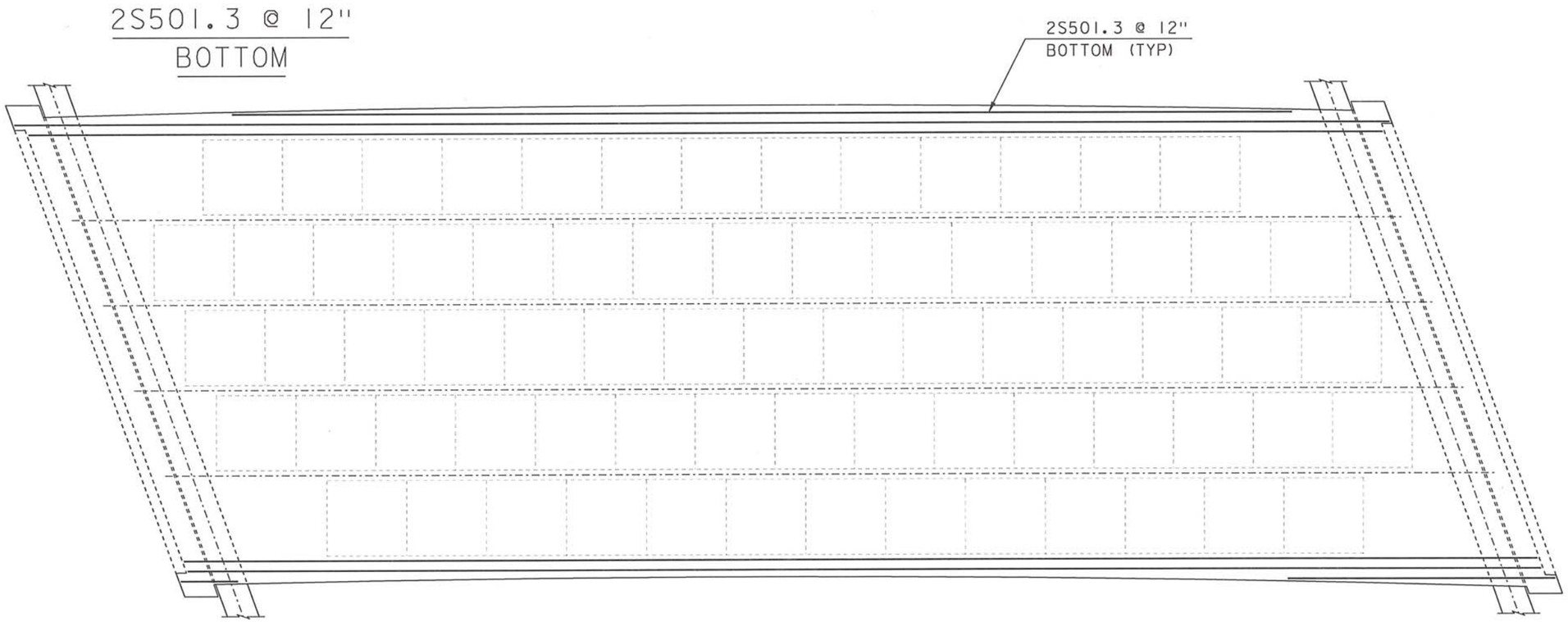

138.2741'-0.33' + 3*(2'-2") = 144'-6"

L = 138'-3¼"-(2*2") = 138'-1¼" + (3 SPLICES @ 2'-2") = 145'-7¼"
= SAY = 145'-7" / 4 = 36'-4¾"
= 4 BARS @ 36'-4¾" EACH

36'-2"

LOCATION: FASCIA TO ℄ OF GIRDER. BOTTOM.

QUANTITY:

+1=4

MAX OVERHANG (LEFT OFFSET) = 2'-9½"
2.79' -(3" CLR) = 2.54'/1' = 2.54 BARS = SAY 3 BARS * 4 = 12 BARS

16

MAX OVERHANG (RIGHT OFFSET) = 2'-9⅝"
2.80'-(3" CLR) = 2.55'/1' = 2.55 BARS = SAY 3 BARS * 4 = 12 BARS

16 Bars

TOTAL = 24 BARS

32 Bars

2S501.3 @ 12" BOTTOM

NOT TO SCALE

RMK 12/31/14

PROJECT NAME: HARTFORD	
PROJECT NUMBER: IM 091-2 (79)	
FILE NAME: sl2al32sup43N_RSQuant.dgn	PLOT DATE: 01-DEC-2014
PROJECT LEADER: K. HIGGINS	DRAWN BY: K. FRIEDLAND
DESIGNED BY: R. KLINEFELTER	CHECKED BY: JDG 12/5/14
SUP 43N REINFORCING QUANTITY I	SHEET 11 OF 21

2S502.3 @ 12" BOTTOM
(cut to fit)

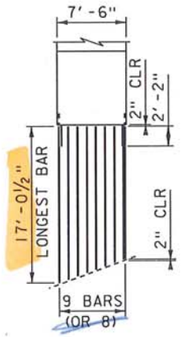

Not sure where 19'-9" comes from. I measure 17'-4½" from begin/end bridge to panel @ longest bar.
∴ I agree w/ 17'-0½"

19'-9" - 4" = 19'-5"

LONGEST BAR = 17.0417'

QUANTITY:

((7.50') - (2*2"))/1' = 7.17 BARS +1 = 8.17 BARS

SAY = 9 BARS * 10 END PANELS = 90 BARS

2S503.3 @ 6" BOTTOM
(cut to fit)

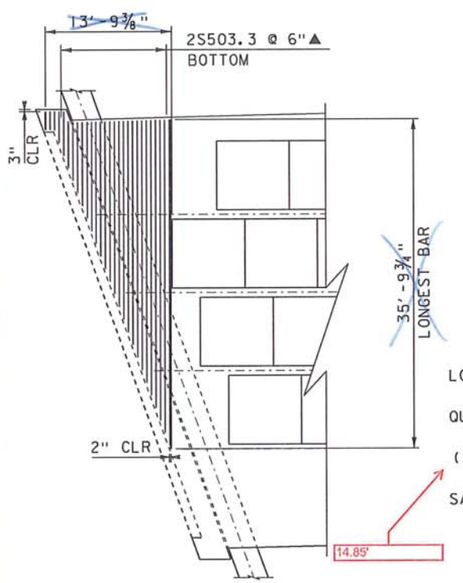

I measure 36'-4¾" on Abut 2 end @ 1.5" off from end of panel.

36'-9"

LONGEST BAR = ~~35'-9¾"~~ 36'-4¾"

30 Bars

QUANTITY:

((13'-9⅜") - (2"))/.5' = 27.23 BARS +1 = 28.23 BARS

SAY = ~~29~~ 30 BARS ~~*2 = 58 BARS~~ (USE cutoffs other end)

2S504.3 @ 6" BOTTOM
(CUT TO FIT)

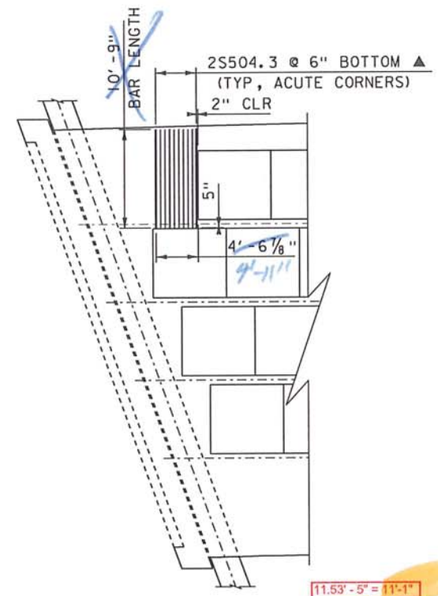

11.53' - 5" = 11'-1"

BAR LENGTH = 10'-9 1/16"

QUANTITY:

4.9063 - 4/12

((4'-6⅞") - (2"))/.5' = 8.81 BARS +1 = 9.81 BARS

SAY = 10 BARS * (2) = 20 BARS

22 Bars

11 Bars

2S505.3 @ 6" BOTTOM
(CUT TO FIT)

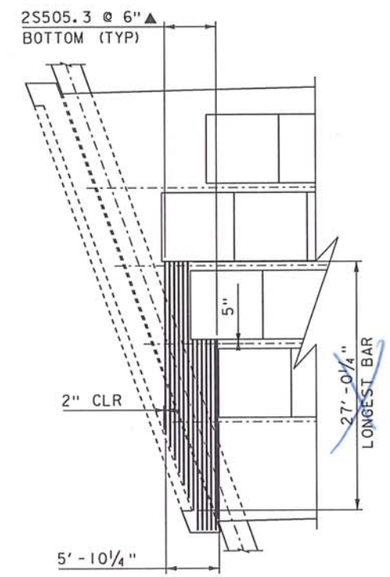

LONGEST BAR LENGTH = ~~27'-¼"~~ 26'-¼"

QUANTITY:

6.1875' - 4/12 / .5 +1 =

((5'-10¼") - (2"))/.5' = 11.38 BARS +1 = 12.38 BARS

SAY = 13 BARS * (2) = 28 BARS

26 bARS

2S506.3 @ 6" BOTTOM
(CUT TO FIT)

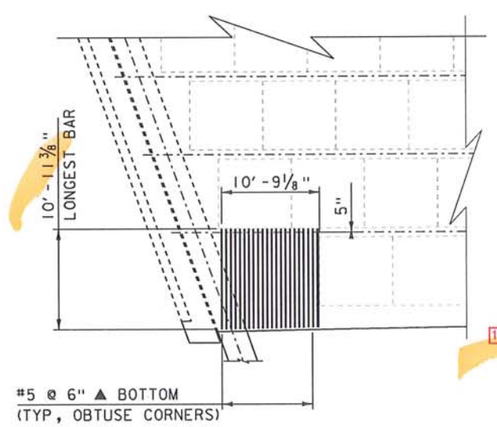

LONGEST BAR LENGTH = 10'-11⅜"

QUANTITY:

((10'-9⅛") - (2"))/.5' = 21.19 BARS +1 = 22.19 BARS

SAY = 23 BARS * (2) = 46 BARS

11.0937 - 4/12

RMK 12/31/14

NOT TO SCALE

PROJECT NAME: HARTFORD	
PROJECT NUMBER: IM 091-2 (79)	
FILE NAME: sl2al32sup43N_RSQuant.dgn	PLOT DATE: 01-DEC-2014
PROJECT LEADER: K. HIGGINS	DRAWN BY: K. FRIEDLAND
DESIGNED BY: R. KLINEFELTER	CHECKED BY: JDG 12/5/14
SUP 43N REINFORCING QUANTITY 2	SHEET 12 OF 21

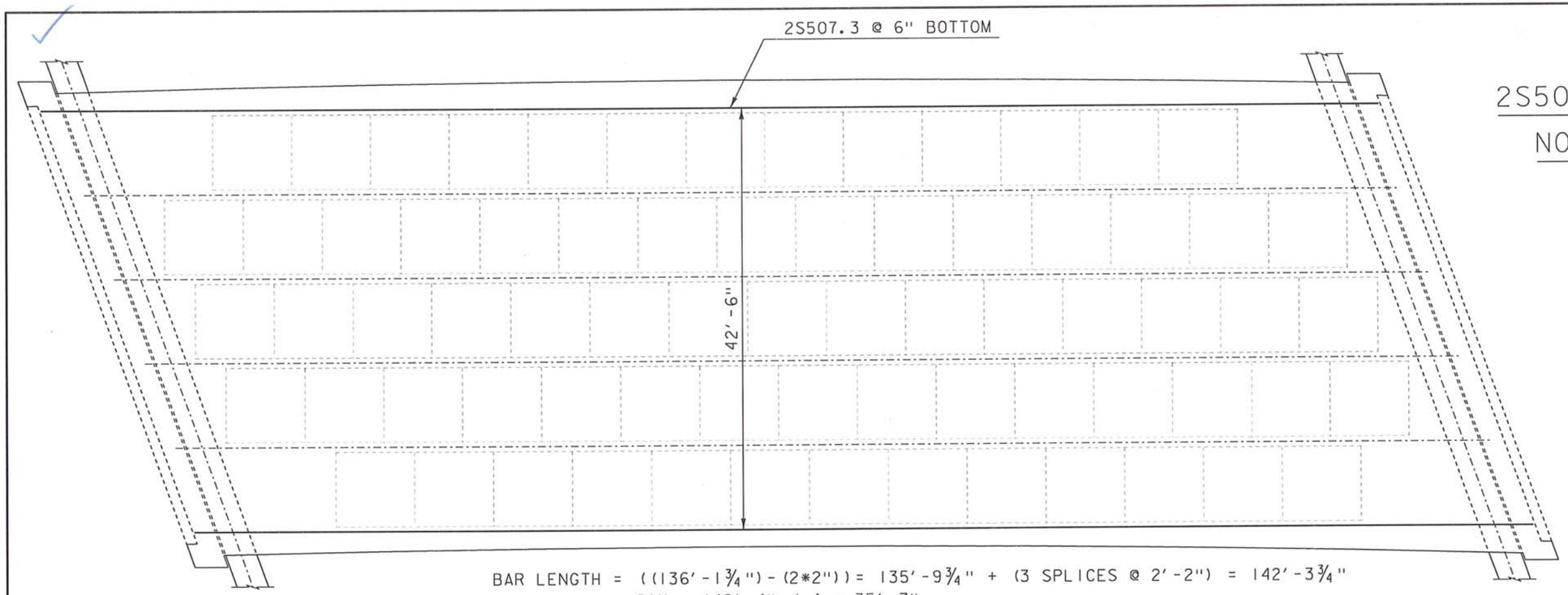

2S507.3 @ 6" TOP

NOT TO SCALE

BAR LENGTH = ((136'-1¾")-(2*2")) = 135'-9¾" + (3 SPLICES @ 2'-2") = 142'-3¾"
= SAY = 142'-4" / 4 = 35'-7"
= 4 BARS @ 35'-7" EACH

LOCATION: BARS RUN FROM CENTER OF GIRDER 1 TO GIRDER 6.

QUANTITY:

(42'-6")/.5' = 85.0 BARS +1 = 86.0 BARS * 4 = 344 BARS

SAY = 344 BARS

50'-7" 50'-1"

BAR LENGTH = ((53'-3⅝")-(2*3")) = 52'-9⅝" + (1 SPLICE @ 2'-2") = 54'-11⅝" 52'-3"
= SAY = 55' / 2 = 27'-6" 26'-1"
= 2 BARS @ 27'-6" EACH

SEE BACKWALL CALCS

LOCATION: BACKWALL EF

24 Bars

5.7

QUANTITY:
((4'-4¼")-(3"))/.5' = 8.21 BARS +1 = 9.21 BARS * 2 = 18.42 BARS

SAY = 19 BARS EF * (2 FACES) = 38 BARS * 2 BACKWALLS = 76 BARS

96 Bars

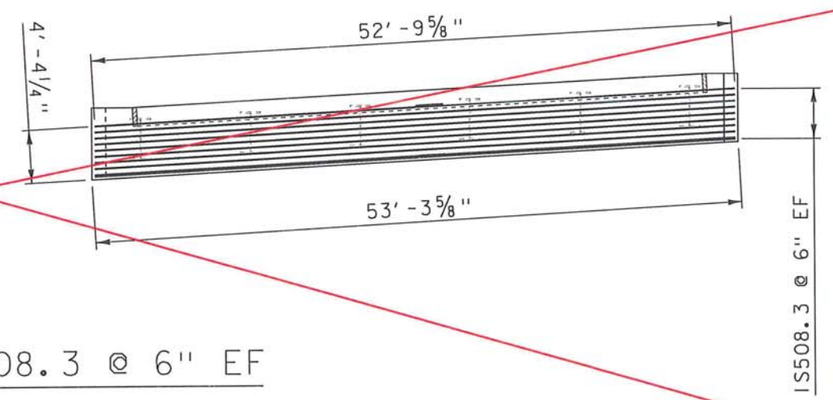

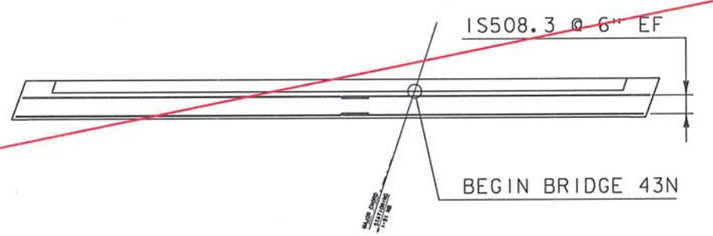

2S508.3 @ 6" EF

RMK 12/3/14

NOT TO SCALE

PROJECT NAME: HARTFORD	
PROJECT NUMBER: IM 091-2 (79)	
FILE NAME: s12a132sup43N_RSQuant.dgn	PLOT DATE: 01-DEC-2014
PROJECT LEADER: K. HIGGINS	DRAWN BY: K. FRIEDLAND
DESIGNED BY: R. KLINEFELTER	CHECKED BY: JDG 12/5/14
SUP 43N REINFORCING QUANTITY 3	SHEET 13 OF 21

SEE BACKWALL CALCS

2S509.3 @ 6" EF

NOT TO SCALE

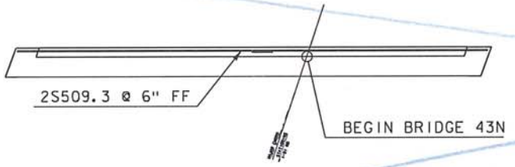

BAR LENGTH = ((53'-3⅝")-(2*3")) = 52-9⅝" + (1 SPLICE @ 2'-2") = 54'-11⅝"
= SAY 55' / 2 = 27'-6"
= 2 BARS @ 27'-6" EACH ← 26'-1"

LOCATION: BACKWALL EF

QUANTITY:

((1'-6")-(2*3"))/.5' = 2 BARS +1 = 3 BARS * 2 = 6 BARS

SAY = 6 BARS FF * 2 BACKWALLS = 12 BARS

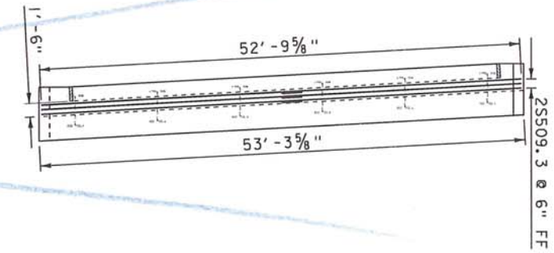

2S510.3 @ 6" (TYP)

CUT TO FIT

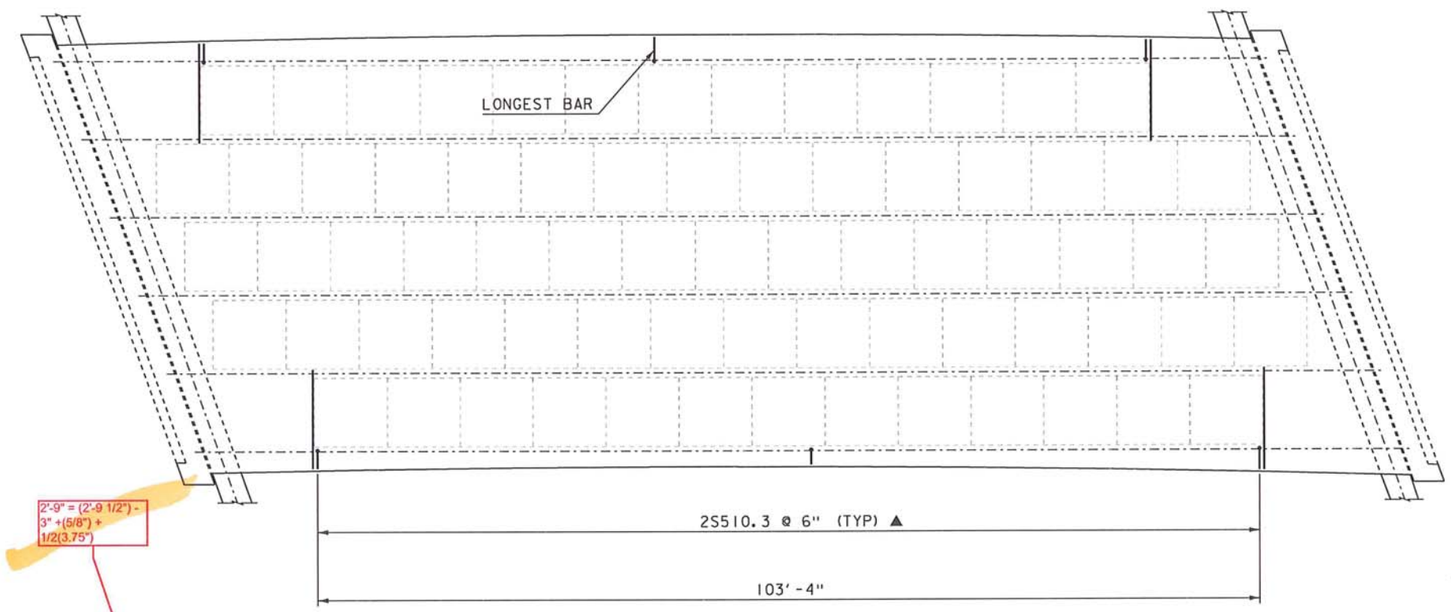

2'-9" = (2'-9 1/2") - 3" +(5/8") + 1/2(3.75")

A = 7"
B = 2'-10⅜"
J = 5"

LOCATION: OVERHANG

QUANTITY:

(103'-4")/.5' = 206.67 BARS +1 = 207.67 BARS

SAY = 208 BARS * 2 OVERHANGS = 416 BARS

180° HOOK

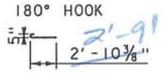

LONGEST BAR

LONGEST BAR
180° HOOK

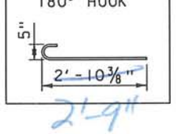

RMK 12/31/14

NOT TO SCALE

PROJECT NAME: HARTFORD	
PROJECT NUMBER: IM 091-2 (79)	
FILE NAME: sl2al32sup43N_RSQuant.dgn	PLOT DATE: 01-DEC-2014
PROJECT LEADER: K. HIGGINS	DRAWN BY: K. FRIEDLAND
DESIGNED BY: R. KLINEFELTER	CHECKED BY: JDG 12/5/14
SUP 43N REINFORCING QUANTITY 4	SHEET 14 OF 21

2S604.3 @ 6"
~~2S511.3 @ 9"~~

10"

A = 2'-2"
B = 1'-11"
C = 1'-2¼"
D = 2'-7¾"
H = 1'-10½"
K = 1'-11"

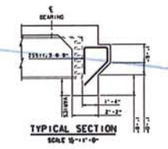

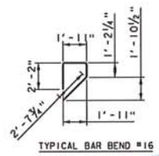

LOCATION: BACKWALL

QUANTITY:

((52'-1⅝")-(2*3"))/ 9" = 68.85 BARS +1 = 69.85 BARS

SAY = 70 BARS * 2 BACKWALLS = 140 BARS

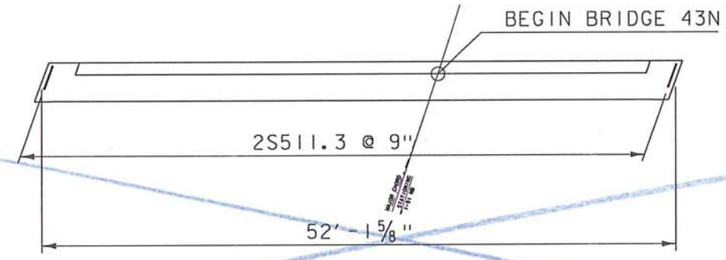

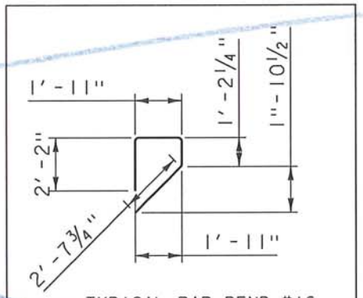

TYPICAL BAR BEND #16

NOT TO SCALE

SEE BACKWALL CALCS

2S511.3 @ 6"
~~2S512.3 @ 9"~~

G = 2'-2"
B = 4'-10⅞"
C = 1'-8"
D = 3'-7⅜"

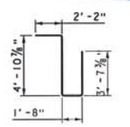

TYPICAL BAR BEND #S5

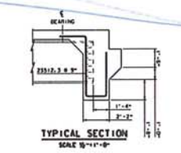

LOCATION: BACKWALL

QUANTITY:

((52'-1⅝")-(2*3"))/ 9" = 68.85 BARS +1 = 69.85 BARS

SAY = 70 BARS * 2 BACKWALLS = 140 BARS

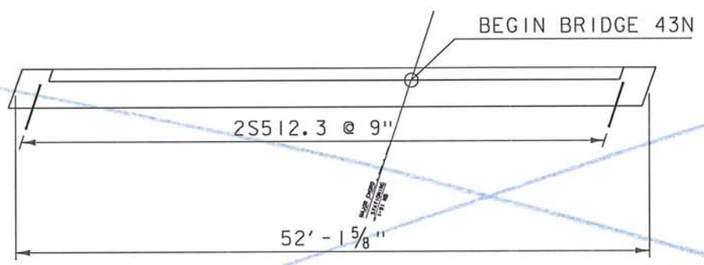

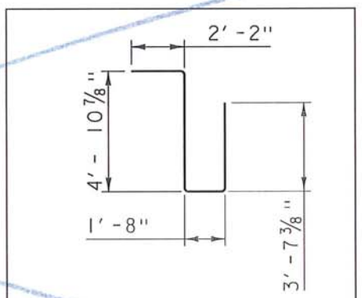

TYPICAL BAR BEND #S5

NOT TO SCALE

RMK 12/31/14

PROJECT NAME: HARTFORD	
PROJECT NUMBER: IM 091-2 (79)	
FILE NAME: sl2al32sup43N_RSQuant.dgn	PLOT DATE: 01-DEC-2014
PROJECT LEADER: K. HIGGINS	DRAWN BY: K. FRIEDLAND
DESIGNED BY: R. KLINEFELTER	CHECKED BY: JDG 12/5/14
SUP 43N REINFORCING QUANTITY 5	SHEET 15 OF 21

DELETED ← this bar was combined w/ 2S512.3 (now 2S511.3)

~~2S513.3 @ 9"~~

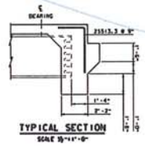

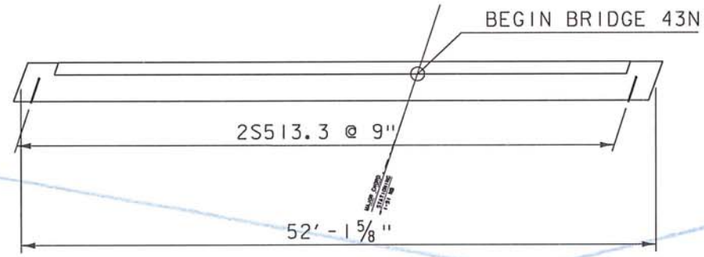

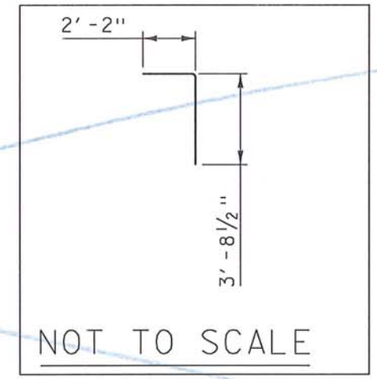

A = 2'-2"
B = 3'-8 1/2"

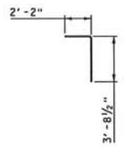

LOCATION: BACKWALL

QUANTITY:

((52'-1 5/8")-(2*3"))/ 9" = 68.85 BARS +1 = 69.85 BARS

SAY = 70 BARS * 2 BACKWALLS = 140 BARS

SEE BACKWALL CALCS

2S512.3 @ 12"

~~2S514.3 @ 9"~~

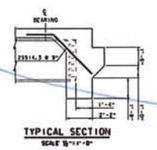

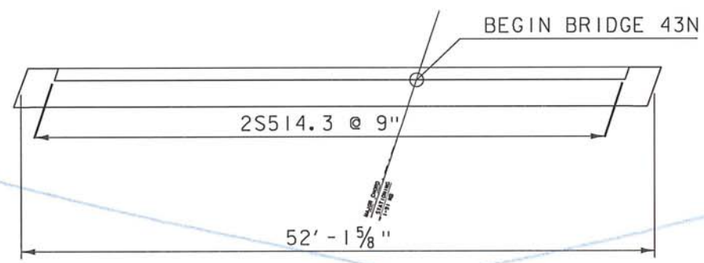

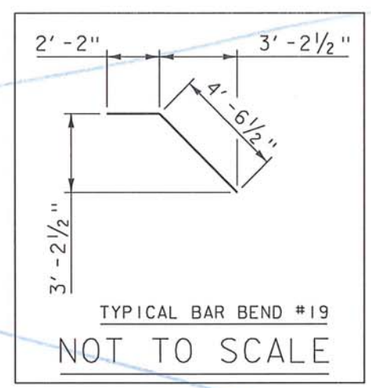

C = 2'-2"
D = 4'-6 1/2"
H = 3'-2 1/2"
K = 3'-2 1/2"

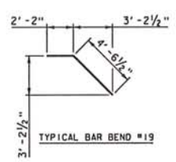

LOCATION: BACKWALL

QUANTITY:

((52'-1 5/8")-(2*3"))/ 9" = 68.85 BARS +1 = 69.85 BARS

SAY = 70 BARS * 2 BACKWALLS = 140 BARS

RMK 12/31/14

PROJECT NAME: HARTFORD	
PROJECT NUMBER: IM 091-2 (79)	
FILE NAME: sl2al32sup43N_RSQuant.dgn	PLOT DATE: 01-DEC-2014
PROJECT LEADER: K. HIGGINS	DRAWN BY: K. FRIEDLAND
DESIGNED BY: R. KLINEFELTER	CHECKED BY: JDG 12/5/14
SUP 43N REINFORCING QUANTITY 6	SHEET 16 OF 21

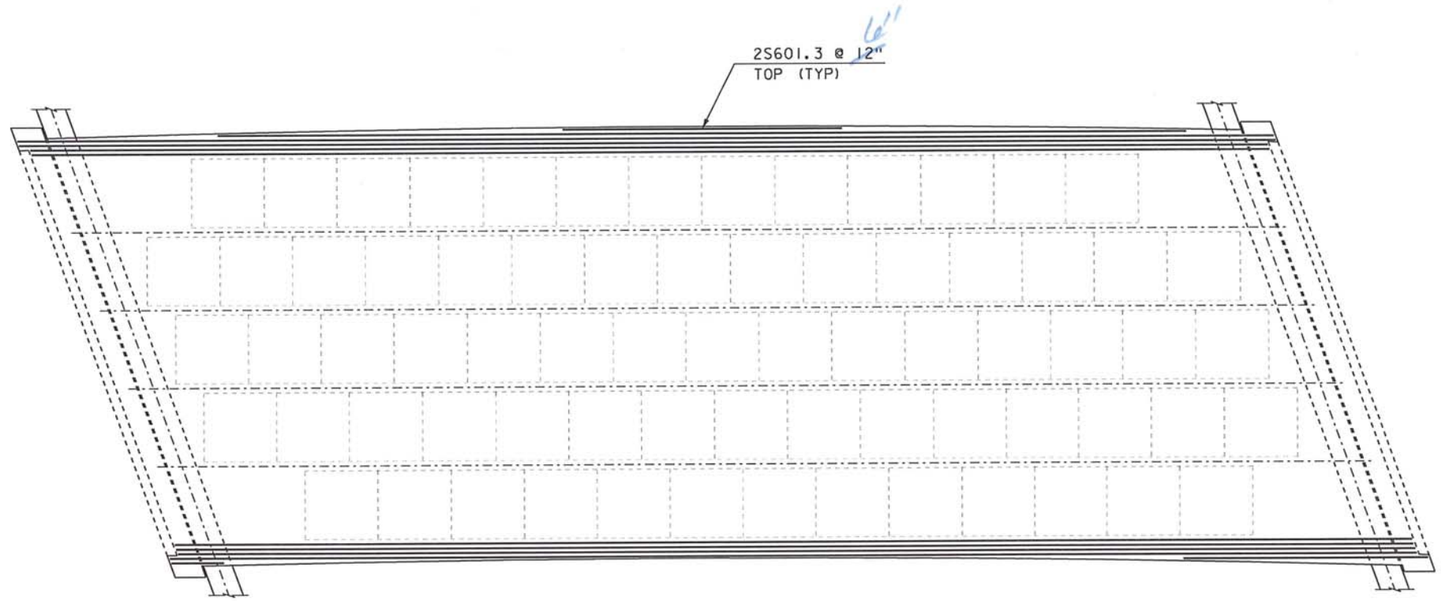

145.69'

L = 138'-3¼" - (2*2") = 137'-11¼" + (3 SPLICES @ ~~2'-2"~~ 2'-7") = ~~143'-5¼"~~ 145.69' ← ~~144.4375'~~

= SAY = ~~143'-5¼"~~ 145.69' / 4 = ~~35'-10⅜"~~ 36'-6" ← ~~36'-2"~~

= 4 BARS @ ~~35'-10⅜"~~ 36'-6" EACH

LOCATION: FASCIA TO ℄ OF GIRDER. BOTTOM.

QUANTITY:

MAX OVERHANG (LEFT OFFSET) = 2'-9½"
((2.7917') - (3" CLR))/6" = 5.08 BARS = SAY 6 BARS * 4 = 24 BARS

7 Bars → 28

MAX OVERHANG (RIGHT OFFSET) = 2'-9⅝"
((2.8021') - (3" CLR))/6" = 5.10 BARS = SAY 6 BARS * 4 = 24 BARS

TOTAL = ~~48~~ 28 BARS * 2 OVERHANGS = ~~96~~ 56 BARS

48 Bars → 7 Bars → 28

2S601.3 @ 6" (TOP)

NOT TO SCALE

RMK 12/31/14

PROJECT NAME: HARTFORD	
PROJECT NUMBER: IM 091-2 (79)	
FILE NAME: sl2al32sup43N_RSQuant.dgn	PLOT DATE: 01-DEC-2014
PROJECT LEADER: K. HIGGINS	DRAWN BY: K. FRIEDLAND
DESIGNED BY: R. KLINEFELTER	CHECKED BY: JDG 12/5/14
SUP 43N REINFORCING QUANTITY 7	SHEET 17 OF 21

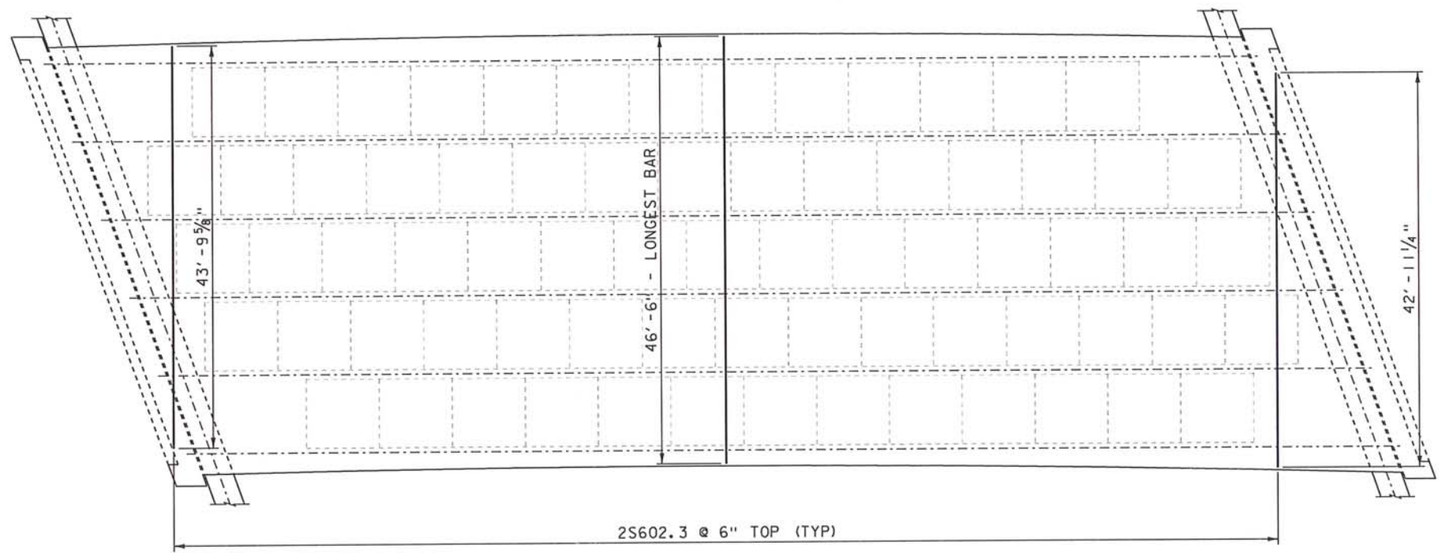

LONGEST BAR LENGTH = 46'-6" + (1 SPLICE @ 2'-7") = 49'-1"
= 49'-1" / 2 = 24'-6½"
= 2 BARS @ 24'-6½" EACH ← 24'-7"

QUANTITY:

(120'-6") / .5' = ~~242~~ 241 BARS +1 = ~~243~~ 242 BARS * 2 = ~~486~~ 484 BARS

SAY = ~~486~~ 484 BARS

2S602.3 @ 6" (TOP)

NOT TO SCALE

RMK 12/31/14

PROJECT NAME: HARTFORD	
PROJECT NUMBER: IM 091-2 (79)	
FILE NAME: s12a132sup43N_RSQuant.dgn	PLOT DATE: 01-DEC-2014
PROJECT LEADER: K. HIGGINS	DRAWN BY: K. FRIEDLAND
DESIGNED BY: R. KLINEFELTER	CHECKED BY: JDG 12/5/14
SUP 43N REINFORCING QUANTITY 8	SHEET 18 OF 21

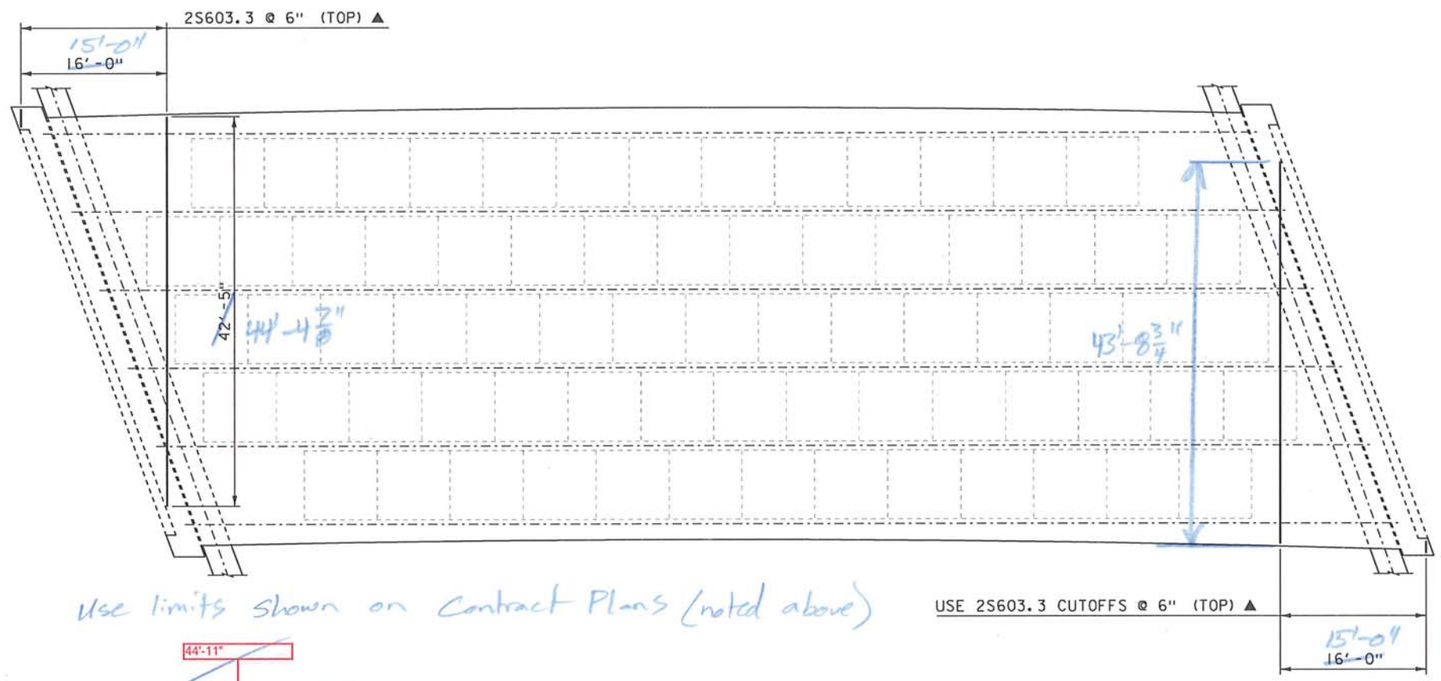

44'-11"

44'-4 7/8"

47'-0"

LONGEST BAR LENGTH = 42'-6" + (1 SPLICE @ 2'-7") = 45'-1" 47'-6"
= SAY = 45'-1" / 2 = 22'-6½" 23'-9"
= 2 BARS @ 22'-6½" EACH 23'-6"

47'-0"

23'-6"

16'-4"

QUANTITY:

15'-0" 30 31 62 68 Bars

(16'-0")/.5' = 32 BARS +1 = 33 BARS * 2 = 66

SAY = 66 BARS * 2 SIDES (USE CUTOFFS) = 132 BARS

62

only 68

2S603.3 @ 6" (TOP)

(CUT TO FIT)

NOT TO SCALE

RMK 12/31/14

PROJECT NAME: HARTFORD	
PROJECT NUMBER: IM 091-2 (79)	
FILE NAME: sl2al32sup43N_RSQuant.dgn	PLOT DATE: 01-DEC-2014
PROJECT LEADER: K. HIGGINS	DRAWN BY: K. FRIEDLAND
DESIGNED BY: R. KLINEFELTER	CHECKED BY: JDG 12/5/14
SUP 43N REINFORCING QUANTITY 9	SHEET 19 OF 21

~~2S401.3 @ 6"~~

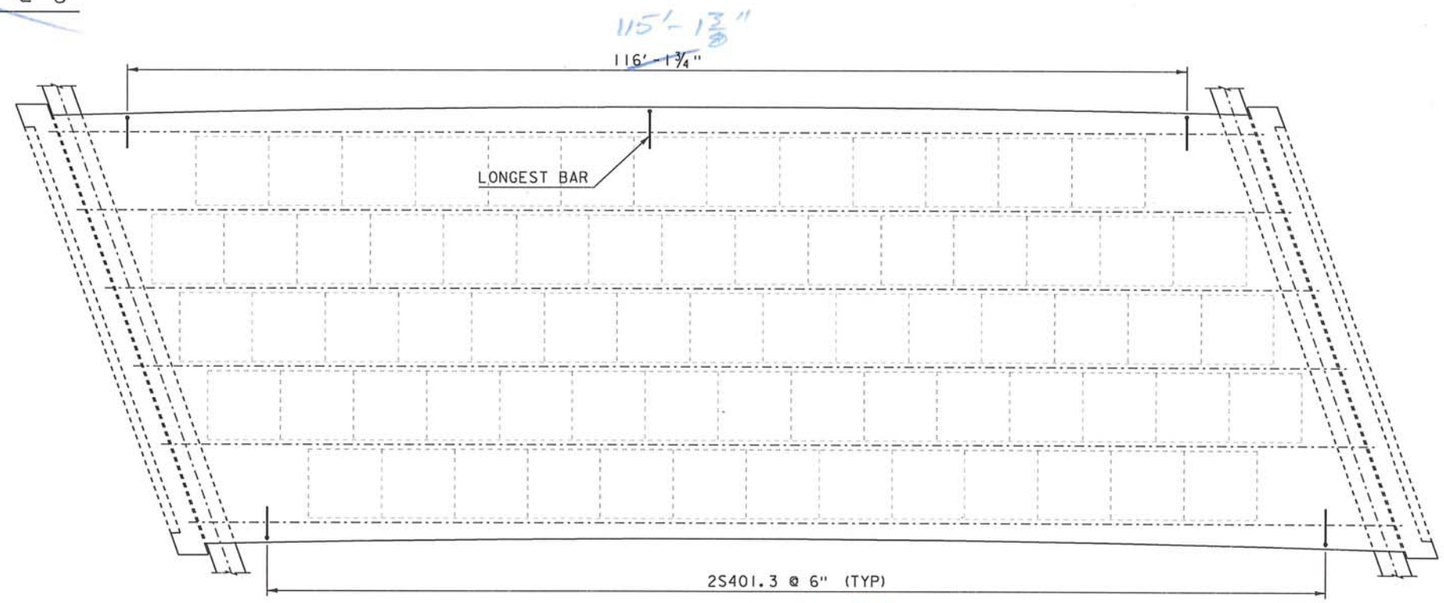

115'-5 7/8" ← 2S513.3 extends from begin/end bridge, 6" space between 2S513.3 and start of 2S401.3.

Type 1

6"

4"

A = 8"
B = 4'-3½"
J = 6"
G = - - -
LOCATION: OVERHANG

180° HOOK
LONGEST BAR

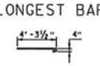

QUANTITY:

115'-5 7/8' 230.90 231.90
(~~116'-1 3/4"~~)/.5' = ~~232.29~~ BARS +1 = ~~233.29~~ BARS

SAY = ~~234~~ BARS * 2 OVERHANGS = ~~468~~ BARS
232 464

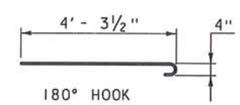

180° HOOK
LONGEST BAR

NOT TO SCALE

2S401.3 @ 6"

NOT TO SCALE

RMK 12/31/14

PROJECT NAME: HARTFORD	
PROJECT NUMBER: IM 091-2 (79)	
FILE NAME: s12a132sup43N_RSQuant.dgn	PLOT DATE: 01-DEC-2014
PROJECT LEADER: K. HIGGINS	DRAWN BY: K. FRIEDLAND
DESIGNED BY: R. KLINEFELTER	CHECKED BY: JDG 12/5/14
SUP 43N REINFORCING QUANTITY 10	SHEET 20 OF 21

~~2S701.3 @ 6"~~

10' (TYP)

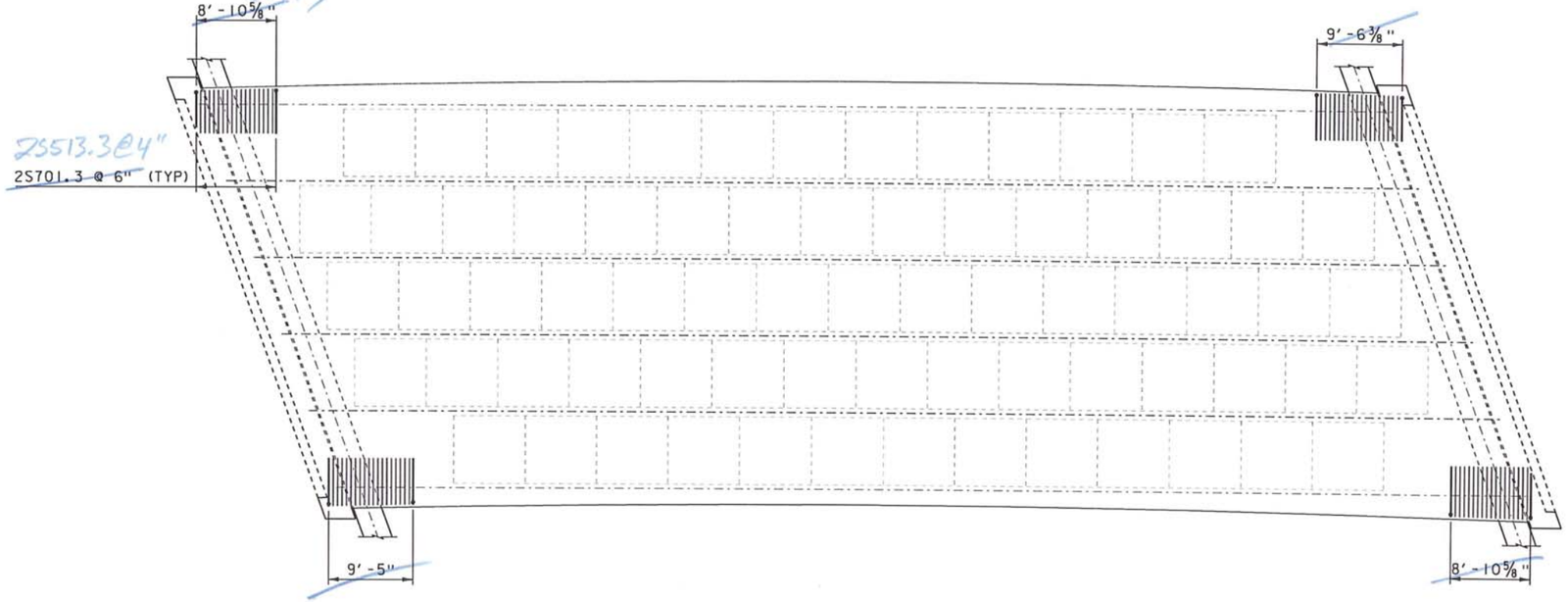

2S513.3

~~2S615.3@4"~~
Level III
TYPE I
A = 7"
B = 2' 9 5/8" + 2'-2" -3" = 4'-9"
J = 5"
Total = 5'-4"
QTY = (10' - 2")/4" + 1 = 31 Bars x 4 = 124 Bars

A = 10"
B = 5' - 10¼"
J = 7"

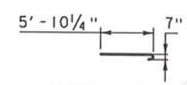

LONGEST BAR
180° HOOK

LOCATION: OVERHANG

QUANTITY:

@ WW1:
(8' - 10⅝") / .5' = 17.77 BARS +1 = 18.77 BARS
SAY = 18 BARS

@ WW2:
(9' - 5") / .5' = 18.8 BARS +1 = 19.8 BARS
SAY = 20 BARS

@ WW3:
(9' - 6⅜") / .5' = 19.06 BARS +1 = 20.06 BARS
SAY = 21 BARS

@ WW4:
(8' - 10⅝") / .5' = 17.77 BARS +1 = 18.77 BARS
SAY = 19 BARS

TOTAL = 78 BARS

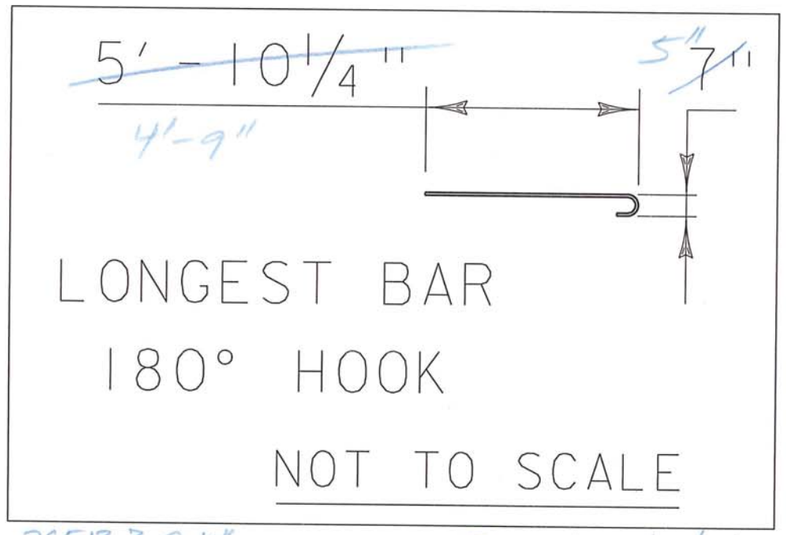

2S513.3 @ 4"
~~2S701.3 @ 6"~~

NOT TO SCALE

RMK 12/31/14

PROJECT NAME: HARTFORD	
PROJECT NUMBER: IM 091-2 (79)	
FILE NAME: sl2al32sup43N_RSQuant.dgn	PLOT DATE: 01-DEC-2014
PROJECT LEADER: K. HIGGINS	DRAWN BY: K. FRIEDLAND
DESIGNED BY: R. KLINEFELTER	CHECKED BY: JDG 12/5/14
SUP 43N REINFORCING QUANTITY II	SHEET 21 OF 21

RMK 12/23/14

1S508.3 @ 6" EF Back Checked by: JDG 01/06/15

Note: Backwall 1 is shorter (51.67'), additional length can be added to splice so bars do not need to be cut.

Backwall 2 Length =	52.625	ft	
-	0.5	ft	2xClear
	52.125	ft	
+	2.17	ft	Splice
	54.29	ft	
÷	2		1 splice
	27.15	ft	
Say	27.17	ft	

Backwall Typical Section Height

	2.58	ft		Bottom
	1.00	ft		Slope
	1.50	ft		Corbel
	~~0.04~~	ft		~~1/2" shim~~
	0.25	ft		Pave
+	1.25	ft		Approach Slab
	~~6.63~~	ft	6.58	
-	0.75	ft		deck
	~~5.88~~	ft	5.83	
-	~~0.33~~	ft	0.25	Clear (2" Bottom ~~and Top~~) 3"
	~~5.54~~	ft	4.96	
÷	0.5	ft		Spacing
	~~11.08333~~		9.92	
+	1			Plus One
	~~12.08333~~		10.92	
	~~13~~		11	Round
x	2			splices
x	2			Each Face
x	2			2 Backwalls
Say	~~104~~	Bars	88	

This should be recessed in bracket per typical precast approach slab detail, drawing revised.

5.58 ft
− 0.20 ft (min haunch, ℄ Bearing ↳ See Br. Seat Elev Calcs)
− 0.42 ft (Dim from top of girder to center of first hole ↳ See Framing Plan)

Agreed - JDG 01/06/15

1S509.3 ~~@ 6" EF~~ AS SHOWN

Same Length as 1S508.3

Say	27.17	ft

3 Bars in spacing, 6 per backwall, 12 total for bridge

Say	12	Bars

Calculated by: JDG 12/15/14 Backwall Reinforcing Steel Hartford IM 091-2(79)

RMK 12/23/14

Back Checked by: JDG 01/06/15

1S511.3 @ 6" ~~EF~~

TYPE S5

A = Splice Length + Bend Radius + Bar Thickness

A = 2'-2" + 3.75"/2 + 5/8"

A = 2.42 ft

B = Full Backwall Height - Clear deck (2.5") - Clear Bottom (~~2"~~ 3") - Top Transverse Steel in Deck (0.75")

B = ~~6.63'~~ 6.58' - 2.5" - ~~2"~~ 3" - 0.75"

B = ~~6.25~~ ft 6.08

Backwall height = 6.58' without ½" gap between ap-slab + bracket (drawing revised)

C = (Backwall Width- Clear Back face (2") - Clear Front Face (3"))/cos(skew)

C = (2'+2" -2" - 3")/cos(20*pi()/180))

C = 1.83 ft

D = Full Backwall Height - Deck Thickness + Clear Bottom Deck (1.5") - clear bottom (~~2"~~ 3") + Bottom Transverse Steel in Deck (0.625") + Leg of Bar Diameter (0.625")

D = (~~6.63'~~ 6.58' - 9" + 1.5" - ~~2"~~ 3") + 0.625" + 0.625"

D = ~~5.84~~ ft 5.83

G = A

G = 2.42 ft

Total = 18.76 ft

Quantity

Backwall 2 Length =	52.625	ft	
-	0.5	ft	2xClear
	52.125	ft	
÷	0.5	ft	Spacing
	104.25		
+	1		Plus One
	105.25		
	106		Round
x	2		Backwalls
Say	~~212~~ Bars		

Bars must be omitted at girder locations. Note added to backwall drawing.

Interior:

7.54 ft Dist between flanges along skew
÷ 0.5 ft spacing
15.08
+ 1
Say 16 with bundled bars, 6" spacing can be met w/ 16 bars.
+ 2 bundled bars
18 per bay
x 5 bays
90 interior

Backwall 2 OH Right:

2.49 ft Flange to fascia along skew
-0.25 ft clear
2.24 ft
÷ 0.5 ft spacing
4.48
+ 1
Say 6
+ 1 bundled
7

Backwall 2 OH Left:

1.79 ft Flange to fascia along skew
-0.25 ft clear
1.54 ft
÷ 0.5 ft spacing
3.08
+ 1
Say 4+1 bundled
5

Total:
90+5+7 = 102
x2 backwalls
204

Agreed - JDG 01/06/15

Calculated by: JDG 12/15/14 | Backwall Reinforcing Steel | Hartford IM 091-2(79)

RMK 12/24/14

1S512.3 @ 12" ~~EF~~ Back Checked by: JDG 01/06/15

TYPE ~~19~~ 22 ← use 22 instead since dim O on 19 could lead to confusion with 1 leg omitted

B = Splice Length + Bend Radius + Bar Thickness

B = 2'-2" + 3.75"/2 + 5/8"

B =	2.42	ft

C = (Fillet Width + Backwall Width - Clear Back Face(2 in))/cos(skew)

C = (1'-0" + 2'-2" -2")/cos(20 degrees)

C =	3.17	ft

This calc is for plan view length if bar extended to back of backwall. Since the bar bends down @ 45° and only needs to be developed in backwall, the calc is:

Length in deck:
bar splices w/ deck top longitudinal bars

$$\frac{9" - 2.5"(\text{top clr}) - 0.75"(\text{top trans bar dia})}{\cos 45°} = 8.13"$$

Length in fillet:
3" clr ∴ bar is @
$12" - \frac{3"}{\cos 45} = 7\frac{3}{4}"$ from root of fillet
∴ length $= \frac{7.75"}{\cos 45} = 10.97"$

Length in backwall:
development length = 1'-3"

Total C $= \frac{2.84'}{\cos 20° (\text{skew})} = 3.02'$

3.08'

D = ------

H = B*cos(45 degrees)

H = 2.42*cos(45*pi()/180)

H =	1.75	ft

K = B*sin(45 degrees)

K = 2.42*sin(45*pi()/180)

K =	1.75	ft

~~O = K +C~~

J = ---

R = ---

~~O = 1.75+3.17~~

~~O =~~	~~4.92~~	~~ft~~

Total =	5.58	ft

Quantity

Omit bars @ girders similar to 1S511.3 but no bundling needed.

Backwall 2 Length =	52.625	ft		
-	0.5	ft	2xClear	Interior:
	52.125	ft		7.54 ft between flanges
÷	1	ft	Spacing	÷ 1 ft spacing
	52.125			7.54
+	1		Plus One	+1
	53.125			9 per bay
	54		Round	x5 bays
x	2		Backwalls	45 interior
Say	~~108~~	Bars		

Backwall 2 OH Left:
1.79 ft flange to fascia skew
−0.25 ft clear
1.54 ft
÷ 1 ft spacing
1.54
+1
3

Backwall 2 OH Right:
2.49 ft flange to fascia skew
−0.25 ft clear
2.24
÷ 1 ft spacing
2.24
+1
3

Total:
45+3+3 = 51
x 2 backwalls
102

Agreed - JDG 01/06/15

Calculated by: JDG 12/15/14 Backwall Reinforcing Steel Hartford IM 091-2(79)

RMK 12/24/14

1S604.3 @ ~~12"~~ 6" EF

Back Checked by: JDG 01/06/15

TYPE 16

A = Hook Length

A =	1.00	ft

B = (1'-4" + Slope - 2* Clear Back Face (2"))/cos(skew)

B = (1'-4" + 1'-0" - 4")/cos(20 degrees)

B =	2.08	ft

C = Corbel Depth - 2*Clear Back Face (2")

C = 1'-6" - 4"

C =	1.17	ft

D = (Slope + 1'-4" - 2*Clear Back Face (2"))/(cos(45 degrees)*cos(skew))

D = (1'-0" + 1'-4" - 2*2")/(cos(45)*cos(20))

D =	3	ft

H = D*cos(45 degrees)

H = 3.00*cos(45*pi()/180)

H =	2.083	ft

K = D*sin(45 degrees)

K = 3.00*sin(45*pi()/180)

K =	2.083	ft

Total	7.25	ft

Quantity

Backwall 2 Length =		52.625	ft	
	-	0.5	ft	2xClear
		52.125	ft	
	÷	0.5	ft	Spacing
		104.25		
	+	1		Plus One
		105.25		
		106		Round
	x	2		Backwalls
Say		212	Bars	

RMK 12/24/14

Back Checked by: JDG 01/06/15

1S605.3 @ 12" ~~EF~~

2'-0" corbel depth @ dowel → extend dowel bar to 1S604.3 to tie to

Length = ~~1'-6"~~ + 1'-3" - Clear Top - Clear Back Face

2'

L = ~~1'-6"~~ + 1'-3" ~~-3"~~ - 2"

L = ~~3.167 ft~~ 2.83

Quantity

Backwall 2 Length =		~~49~~ 50	ft	~~49~~ 50 foot long approach slab bracket
	-	0.5	ft	2xClear
		~~48.5~~ 49.5	ft	
	÷	1	ft	Spacing
		~~48.5~~ 49.5		
	+	1		Plus One
		~~49.5~~ 50.5		
		~~50~~ 51		Round
	x	2		Backwalls
Say		~~100~~ 102	Bars	

Agreed - JDG 01/06/15

RMK 12/24/14

Back Checked by: JDG 01/06/15

Note: Backwall 1 is shorter (49.59'), additional length can be added to splice so bars do not need to be cut.

2S508.3 @ 6" EF

Backwall 2 Length =	50.55	ft	
-	0.5	ft	2xClear
	50.05	ft	
+	2.17	ft	Splice
	52.22	ft	
÷	2		1 splice
	26.11	ft	
Say	26.17	ft	

Backwall Typical Section Height

	1.67	ft	Bottom
	1.00	ft	Slope
	1.50	ft	Corbel
	~~0.04~~	~~ft~~	~~1/2" shim~~ recessed in bracket, drawing revised
	0.25	ft	Pave
+	1.25	ft	Approach Slab
	~~5.71~~	~~ft~~ 5.67	
-	0.75	ft	deck
	~~4.96~~	~~ft~~ 4.92	
-	~~0.33~~	~~ft~~ 0.25	Clear ~~(2" Bottom and Top)~~ 3"
	~~4.63~~	~~ft~~ 4.08	
÷	0.5	ft	Spacing
	~~9.25~~	8.16	
+	1		Plus One
	~~10.25~~	9.16	
	~~11~~	10	Round
x	2		splices
x	2		Each Face
x	2		2 Backwalls
Say	~~88~~	Bars	80

4.67 ft
- 0.16 ft (Min haunch, & Bearing ↳ See Br. Seat Elev Calcs)
- 0.44 ft (Dim from top of girder to center of first hole ↳ See Framing Plan)

Agreed - JDG 01/06/15

2S509.3 ~~@ 6" EF~~ AS SHOWN

Same Length as ~~1S508.3~~ 2S508.3

Say	26.17	ft

3 Bars in spacing, 6 per backwall, 12 total for bridge

Say	12	Bars

Calculated by: JDG 12/15/14 Backwall Reinforcing Steel Hartford IM 091-2(79)

RMK 12/24/14

Back Checked by: JDG 01/06/15

2S511.3 @ 6" ~~EF~~

TYPE S5

A = Splice Length + Bend Radius + Bar Thickness

A = 2'-2" + 3.75"/2 + 5/8"

A = 2.42 ft

B = Full Backwall Height - Clear deck (2.5") - Clear Bottom (2") 3" – Top Transverse Steel in Deck (0.75")

B = ~~5.71'~~ 5.67' - 2.5" - ~~2"~~ 3" – 0.75"

B = ~~5.33~~ ft

5.17

Backwall height = 5.67' without ½" gap between ap. slab + bracket (drawing revised)

C = (Backwall Width- Clear Back face (2") - Clear Front Face (3"))/cos(skew)

C = (2'+2" -2" - 3")/cos(20*pi()/180))

C = 1.83 ft

D = Full Backwall Height - Deck Thickness + Clear Bottom Deck (1.5") - clear bottom (2") 3" + Bottom Transverse Steel in Deck (0.625") + Leg ⌀ Bar Diameter (0.625")

D = (~~5.71'~~ 5.67' - 9" + 1.5" - ~~2"~~ 3") + 0.625" + 0.625"

D = 4.92 ft

G = A

G = 2.42 ft

Total = 16.92 ft

Bars must be omitted at girder locations. Note added to backwall drawing.

Quantity

Backwall 2 Length =	50.55	ft	
-	0.5	ft	2xClear
	50.05	ft	
÷	0.5	ft	Spacing
	100.1		
+	1		Plus One
	101.1		
	102		Round
x	2		Backwalls
Say	~~204~~ Bars		

Interior:
7.27 ft Dist between flanges along skew
÷ 0.5 ft spacing
14.54
+ 1
16
+ 2 bundled bars
18 per bay
x 5 bays
90 interior

Backwall 2 OH Left:
1.41 ft Flange to fascia along skew
-0.25 ft clear
1.16 ft
÷ 0.5 ft spacing
2.32
+ 1
4
+ 1 bundled
5

Backwall 2 OH Right:
2.10 ft Flange to fascia along skew
-0.25 ft clear
1.85
÷ 0.5 spacing
3.7
+ 1
5
+ 1 bundled 6

Total:
90 + 5 + 6 = 101
x2 backwalls
202

Agreed - JDG 01/06/15

Calculated by: JDG 12/15/14 Backwall Reinforcing Steel Hartford IM 091-2(79)

RMK 12/24/14

2S512.3 @ 12" ~~EF~~ Back Checked by: JDG 01/06/15

TYPE ~~19~~ 22

B = Splice Length + Bend Radius + Bar Thickness

B = 2'-2" + 3.75"/2 + 5/8"

B =	2.42	ft

C = (Fillet Width + Backwall Width - Clear Back Face(2 in))/cos(skew)

See 1S512.3
C = 3.08'

C = (1'-0" + 2'-2" -2")/cos(20 degrees)

C =	3.17	ft

D = ------

H = B*cos(45 degrees)

H = 2.42*cos(45*pi()/180)

H =	1.75	ft

K = B*sin(45 degrees)

K = 2.42*sin(45*pi()/180)

K =	1.75	ft

~~O = K +C~~

O = 1.75+3.17

O =	4.92	ft

J = ---
R = ---

Total =	5.58	ft

Quantity

Omit bars @ girders similar to 2S511.3 but no bundling needed.

Backwall 2 Length =	50.55	ft	
-	0.5	ft	2xClear
	50.05	ft	
÷	1	ft	Spacing
	50.05		
+	1		Plus One
	51.05		
	52		Round
x	2		Backwalls
Say	104	Bars	

Interior:
7.27 ft between flanges
÷ 1 ft spacing
7.27
+1
9 per bay
x 5 bays
45 interior

Backwall 2 OH Left:
1.41 ft flange to fascia skew
-0.25 ft clear
÷ 1.16 ft spacing
1.16
+1 — 3

Backwall 2 OH Right:
2.10 ft flange to fascia skew
-0.25 ft clear
÷ 1.85 ft spacing
1.85
+1 — 3

Total:
45+3+3 = 51
x 2 backwalls
102

Agreed - JDG 01/06/15

Calculated by: JDG 12/15/14 Backwall Reinforcing Steel Hartford IM 091-2(79)

RMK 12/24/14

2S604.3 @ ~~12" EF~~ 6" Back Checked by: JDG 01/06/15

TYPE 16

A = Hook Length

A =	1.00	ft

B = (1'-4" + Slope - 2* Clear Back Face (2"))/cos(skew)

B = (1'-4" + 1'-0" - 4")/cos(20 degrees)

B =	2.08	ft

C = Corbel Depth - 2*Clear Back Face (2")

C = 1'-6" - 4"

C =	1.17	ft

D = (Slope + 1'-4" - 2*Clear Back Face (2"))/(cos(45 degrees)*cos(skew))

D = (1'-0" + 1'-4" - 2*2")/(cos(45)*cos(20))

D =	3	ft

H = D*cos(45 degrees)

H = 3.00*cos(45*pi()/180)

H =	2.083	ft

K = D*sin(45 degrees)

K = 3.00*sin(45*pi()/180)

K =	2.083	ft

Total	7.25	ft

Quantity

Backwall 2 Length =		50.55	ft	
	-	0.5	ft	2xClear
		50.05	ft	
	÷	0.5	ft	Spacing
		100.1		
	+	1		Plus One
		101.1		
		102		Round
	x	2		Backwalls
Say		204	Bars	

Calculated by: JDG 12/15/14 Backwall Reinforcing Steel Hartford IM 091-2(79)

RMK 12/24/14 Back Checked by: JDG 01/06/15

2S605.3 @ 12" ~~EF~~

2'-0" corbel depth @ dowel → extend dowel bar to 2S604.3 to tie to.

Length = ~~1'-6"~~ + 1'-3" - Clear Top - Clear Back Face

2'

L = ~~1'-6"~~ + 1'-3" -3" - 2"

L = ~~3.167~~ ft 2.83

Quantity:

Backwall 2 Length = 47.88 ft 47.88 foot long approach slab bracket

- 0.5 ft 2x Clear

47.38 ft

÷ 1 ft spacing

47.38

+ 1 Plus one

48.38

49 Round

x 2 Backwalls

98

Agreed - JDG 01/06/15