CONSTRUCTION LEADERS

LETTER OF TRANSMITTAL			
DATE:	**July 30, 2015**	PCL JOB NO:	**5515002**
ATTN:	**Chris Barker**	TRANSMITTAL NO:	**084**

To: **State of Vermont Agency of Transportation**
One National Life Drive
Montpelier, VT 05633-5001
(802) 828-0053

Re: Hartford Lateral Slide
Project No.: IM 091-2(79)
Contract ID.: 12A132 County: Windsor PCL FILE NO: 5515002-051.1

WE ARE SENDING X Attached ____ Under separate cover via **Email & SP** the following:
____ Shop drawings ____ Prints X Plans ____ Samples ____ Specifications
____ Copy of Letter ____ Change Order ____ Other

COPIES	SPEC.	REVISION	DESCRIPTION
1	**529**	**1**	**Removal of Existing Structures**

TRANSMITTED for as checked below:

____ For approval ____ Approved as submitted ____ Resubmit ____ Copies for approval
X For your use ____ Approved as noted ____ Submit X Copies for distribution
____ As requested ____ Returned for corrections ____ Return ____ Corrected prints
____ For review and comment

Remarks:

The included calculations and drawings have been revised per comments from the Agency dated 7/15/2015.

Please return an email of this approved submittal to Erich Heymann (ewheymann@pcl.com) and Jeremy Mackling (jmackling@pcl.com).

We request the review and return of this submittal within 5 days. Please advise if this request cannot be met so we can plan accordingly.

By: **Erich Heymann,** Project Engineer

COPY TO: Project Files

CONSTRUCTION LEADERS

SUBMITTAL NO. : 51.1
Removal of Existing Structures

Item No.	Specification	Description
1	529	Removal of Existing Structures

PROJECT:
HARTFORD LATERAL SLIDE
PROJECT NO.: IM 091-2(79)
CONTRACT ID.: 12A132

OWNER:
STATE OF VERMONT AGENCY OF TRANSPORTATION

ENGINEER OF RECORD:
STATE OF VERMONT AGENCY OF TRANSPORTATION

CONTRACTOR:
PCL CIVIL CONSTRUCTORS, INC.

JULY 30, 2015

3810 Northdale Blvd., Suite 200; Tampa, FL • (813) 264-9500 • (813) 264-6689 (fax)

Vermont Agency of Transportation
I-91
Windsor County
Project Number: IM 091-2(79)

Hartford Lateral Slide

Calculations for Temporary Structures including:

Existing Bridge Demolition
Revision 01

Submitted By,

Tim Davis, P.E.
VT P.E. 97183

André Tousignant, P.E.
VT P.E. # 100162

STATE OF VERMONT
TIMOTHY DAVIS
NO. 97183
CIVIL
LICENSED
PROFESSIONAL ENGINEER

Tim Davis, P.E.
Jul 30 2015 12:44 PM

July 30th, 2015

PCL Civil Constructors Inc.
3810 Northdale Blvd. Suite 200
Tampa, Florida 33624
813-264-9500

TABLE OF CONTENTS

COVER PAGE 1
TABLE OF CONTENTS 2
RIGGING DESIGN 4
GIRDER STABILITY 13
CRANE CAPACITIES 18
REFERENCES 25

Introduction

The purpose of this calculation is the demolition of the existing I-91 bridges above US-5.

Design Criteria

Loads:

- Dead Load
  - Asphalt / Concrete Weight = 150 lb/ft^3
  - Steel Weight = 490 lb/ft^3
- Live Load
  - 25 psf

Materials:

- Steel
  - W Shapes / HP's / Channels, F_y = 50 ksi or better
  - Misc plates / shims, F_y = 36 ksi or better
  - Existing Steel, F_y = 36 ksi

Design Aids:

- AASHTO Guide Design Specification for Bridge Temporary Works
- AISC ASD 9th Edition

Revision Summary
Rev 1 - Added Rigging sheets per Submittal comments, updated crane lift analysis forms, Column lift changed to full column weight

Demo Calcs - Lifting Slabs

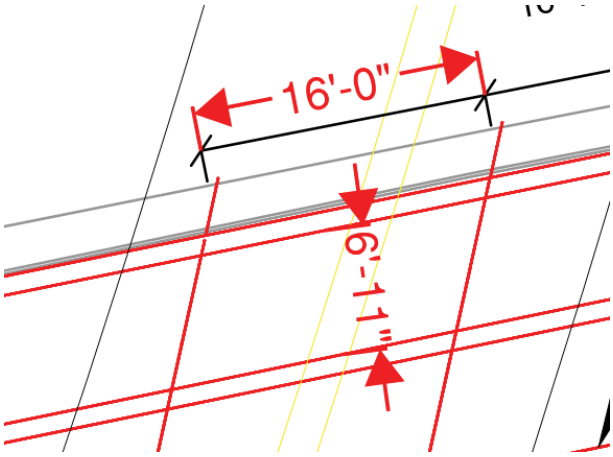

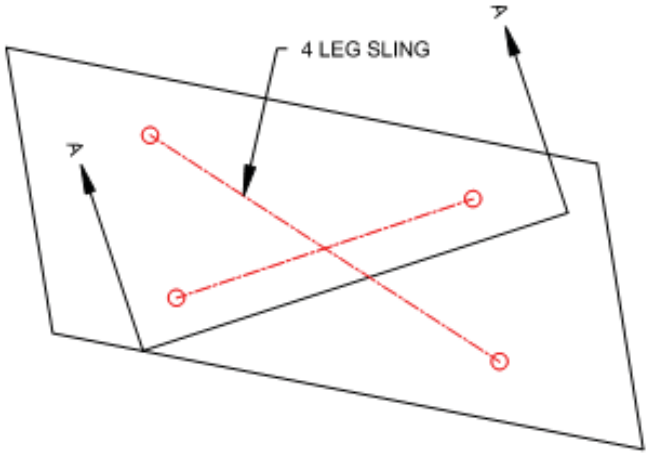

CONCRETE SLAB RIGGING - PLAN

Max Slab is on NB, suspended span. 16' x 7'-3" x 7.5". Holes are offset 3' from transverse sawcut, and 1'-4" from longitudinal sawcut.

Max calculated piece weight = 16' x 7.25' x .625' x 150pcf = 10.9 kips

12 kips used conservatively in calc's and drawings.

Three legs of rigging detailed to hold entire slab, four provided--> OK by inspection

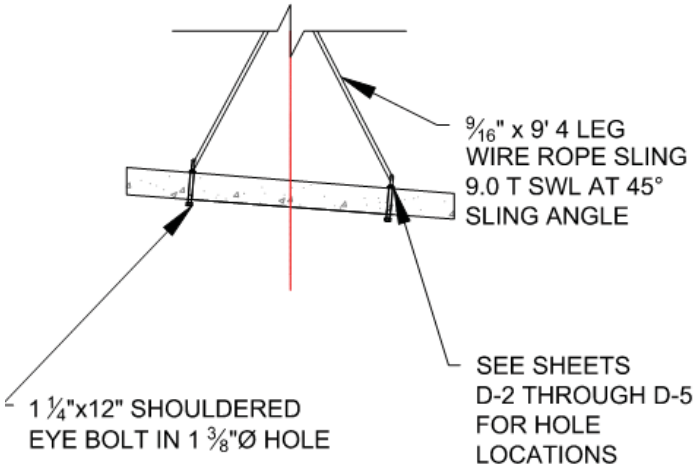

CONCRETE SLAB RIGGING - ELEVATION

Demo Calcs - Lifting Slabs - Cont.

Check Slab Bending and Shear:

Longitudinal Shear/moment diagram

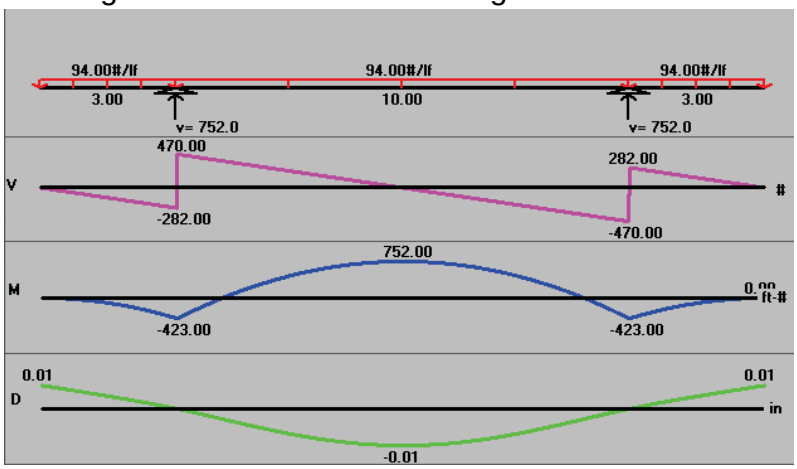

Transverse Shear/moment diagram

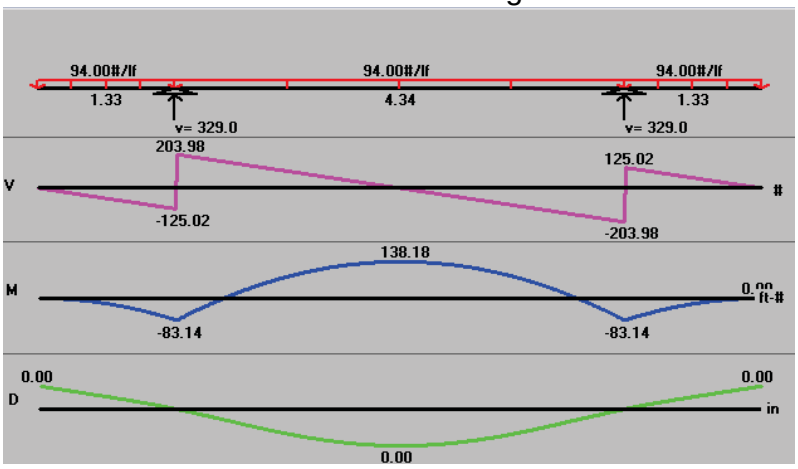

Check Slab Bending and Shear:

For Bending # 5 at 37" required, #5 at 9" provided --> OK
No shear reinforcing Required
see following sheets

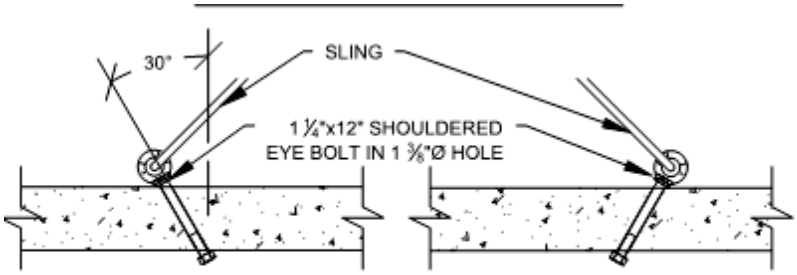

SECTION A-A

Check Eyebolts:

21k > 12k ---> OK
Oversize chosen so that nuts could be installed if necessary

G-277 Shoulder Nut Eye Bolts

Shank Dia. & Length (in.)	G-277 Stock No.	Working Load Limit (lbs.)*	Weight Each Per 100 (lbs.)	Dimensions (in.)								
				A	B	C	D	E	F	G	H	J
1/4 x 2	1045014	650	6.60	.25	.50	.88	.19	1.50	2.00	2.94	.50	.47
1/4 x 4	1045032	650	9.10	.25	.50	.88	.19	2.50	4.00	4.94	.50	.47
5/16 x 2-1/4	1045050	1200	12.50	.31	.62	1.12	.25	1.50	2.25	3.50	.69	.56
5/16 x 4-1/4	1045078	1200	18.80	.31	.62	1.12	.25	2.50	4.25	5.50	.69	.56
3/8 x 2-1/2	1045096	1550	21.40	.38	.75	1.38	.31	1.50	2.50	3.97	.78	.66
3/8 x 4-1/2	1045112	1550	25.30	.38	.75	1.38	.31	2.50	4.50	5.97	.78	.66
1/2 x 3-1/4	1045130	2600	42.60	.50	1.00	1.75	.38	1.50	3.25	5.12	1.00	.91
1/2 x 6	1045158	2600	56.80	.50	1.00	1.75	.38	3.00	6.00	7.88	1.00	.91
5/8 x 4	1045176	5200	68.60	.62	1.25	2.25	.50	2.00	4.00	6.44	1.31	1.12
5/8 x 6	1045194	5200	102.40	.62	1.25	2.25	.50	3.00	6.00	8.44	1.31	1.12
3/4 x 4-1/2	1045210	7200	144.50	.75	1.50	2.75	.62	2.00	4.50	7.44	1.56	1.38
3/4 x 6	1045238	7200	167.50	.75	1.50	2.75	.62	3.00	6.00	8.94	1.56	1.38
7/8 x 5	1045256	10600	225.00	.88	1.75	3.25	.75	2.50	5.00	8.46	1.84	1.56
1 x 6	1045292	13300	366.30	1.00	2.00	3.75	.88	3.00	6.00	9.97	2.09	1.81
1 x 9	1045318	13300	422.50	1.00	2.00	3.75	.88	4.00	9.00	12.97	2.09	1.81
1-1/4 x 8	1045336	21000	650.00	1.25	2.50	4.50	1.00	4.00	8.00	12.72	2.47	2.28
1-1/4 x 12	1045354	21000	795.00	1.25	2.50	4.50	1.00	4.00	12.00	16.72	2.47	2.28
1-1/2 x 15	1045372	24000	1425.00	1.50	3.00	5.50	1.25	6.00	15.00	20.75	3.00	2.75

*Ultimate Load is 5 times the Working Load Limit. Maximum Proof Load is 2 times the Working Load Limit.

Moment Design

Project No:	5515002	**By:** TMD	**Date:**
Project:	Hartford	**Checked By:**	**Date:**

Calculation Of Required Reinforcing Rebars

Subject:

Calculation For:

Input

M (DL)=	0	FT.KIPS	Factor DL=	1.4	
M (LL)=	0.752	FT.KIPS	Factor LL=	2	
Mu=		FT.KIPS	f'c=	4	KSI
d=	4.5	IN	fy=	60	KSI
b=	12	IN	As(prov)=	0.44	IN^2

Output

Moment (Mu)=	1.5	FT.KIPS			
A=	39.71		X=	6.044804	
B=	-243.0		Y=	0.075196	
C=	18.0				
Δ=	56183				
β_1=	0.85	ACI (10.2.7.3)	(**A**) As^2 +(**B**) As + (**C**) =0		
ρ Min=	0.0033	ACI (10.5.1)			
ρ Max=	0.0214	ACI (10.3.3)	As=	0.075196	IN^2
ρ Actual=	0.0014		a=	0.11	IN
			Cc=	5	KIPS
Required As=	0.08	IN^2	T=	5	KIPS
Min As=	0.18	IN^2	**Use the minimum of 1.33 Req'd As or As min**		
Max As=	1.15	IN^2	ϕMn=	8.3	FT.KIPS

Final As (IN^2)= **0.10**

% of ρ Max= **8.66244** %

Bar Selection:

1	#3	0.11	or	#3 @	13.20	o.c.
1	#4	0.20	or	#4 @	24.00	o.c.
1	#5	0.31	or	#5 @	37.20	o.c.
1	#6	0.44	or	#6 @	52.79	o.c.
1	#7	0.60	or	#7 @	71.99	o.c.
1	#8	0.79	or	#8 @	94.79	o.c.
1	#9	1.00	or	#9 @	119.99	o.c.
1	#10	1.27	or	#10 @	152.38	o.c.
1	#11	1.56	or	#11 @	187.18	o.c.

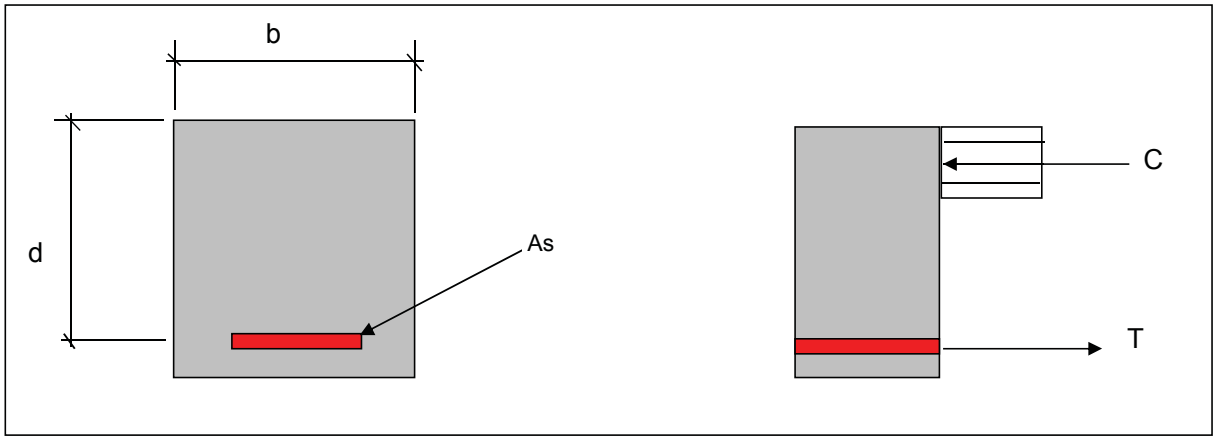

Shear Design

Project No:		**By:**	TMD	**Date:**	5/18/2015
Project:		**Checked By:**		**Date:**	

Calculation Of Required Shear Reinforcement

Subject:
Calculation For:

Input

V(DL)=		KIPS	Factor DL=	1.4	
V(LL)=	0.47	KIPS	Factor LL=	2	
Vu=		KIPS	f'c=	4	KSI
d=	4.5	IN	fy=	60	KSI
b_w=	12	IN	Av(prov)=		IN^2

Output

Shear (Vu)=	0.94	KIPS				
ϕVc_{min}=	5.81	KIPS	ϕVs_{max} =	23.22	KIPS	(ACI 11.5.6.8)
ϕVs =		KIPS	S_{max} =	2.25	IN	(ACI 11.5.4.1)
Comments:	No shear reinf. req'd		S =	2.25	IN	(ACI 11-15)
						(ACI 11.5.4.3)

Area of Shear Reinforcement=		IN^2
Spacing of Shear Reinforcement=	N/A	IN

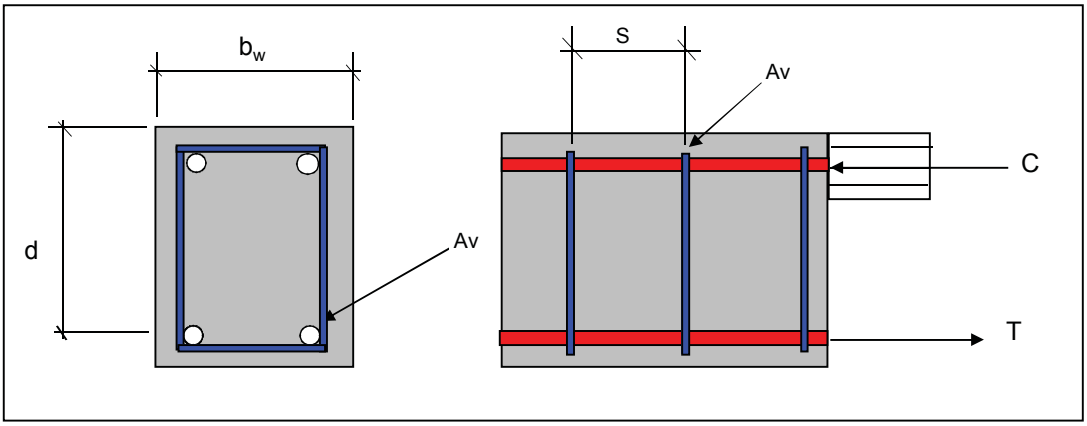

Demo Calcs - Lifting Slabs - Cont.

Check Curb Section:

Concrete is deeper with same reinforcement as Deck,
OK by inspection.

Piece weight =

2'-2" x 19.5" x 16' x 150pcf = 8.4 kip
(thickened)
1'-8" x 7.5" x 16' x 150pcf = 2.5 kips
(deck)
8.4 k + 2.5 k = 10.9 k. 14 kips usec
conservatively, to include railing

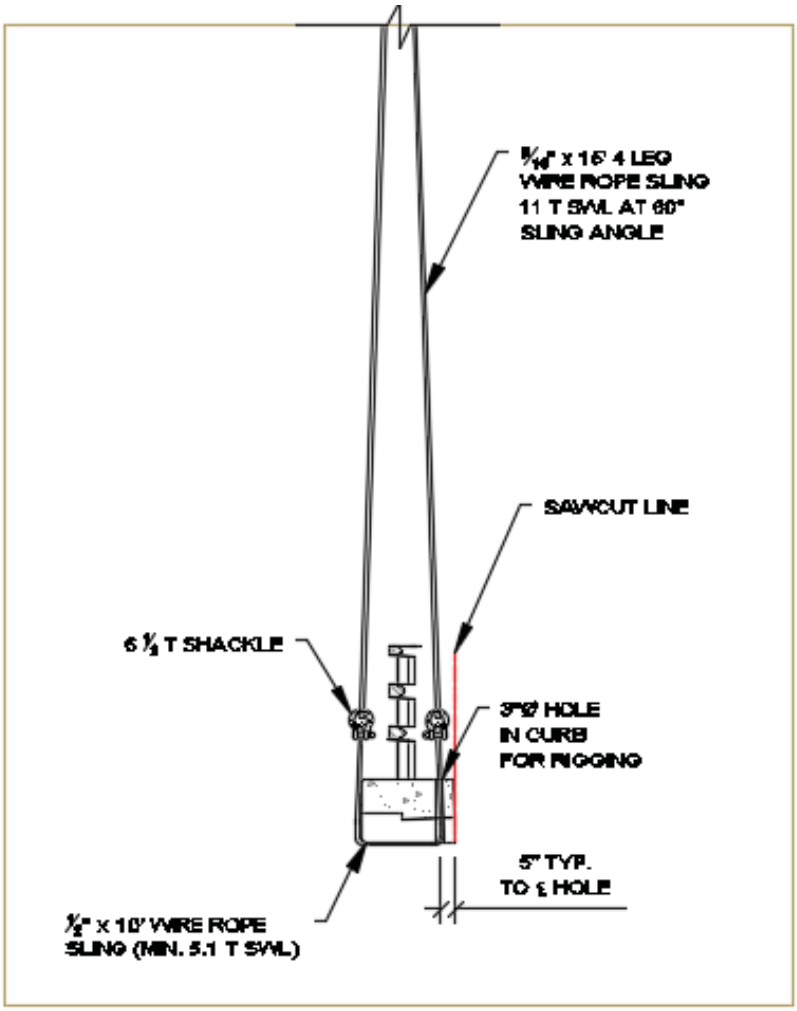

OVERHANG CURB RIGGING

Rigging Check:

14k total / 2 sides in a basket.

Rigging shall be 4.7k/leg min,
rigging shown OK.

Demo Calcs - Cap Removal

Piece weight =

3'-0" x 4'-0" x 12'-0" x 150pcf
= 21.6 kips
23 kips used conservatively

Rigging Check:

23k total / 2 sides in a basket.

Rigging shall be 6k/leg min,
rigging shown OK.

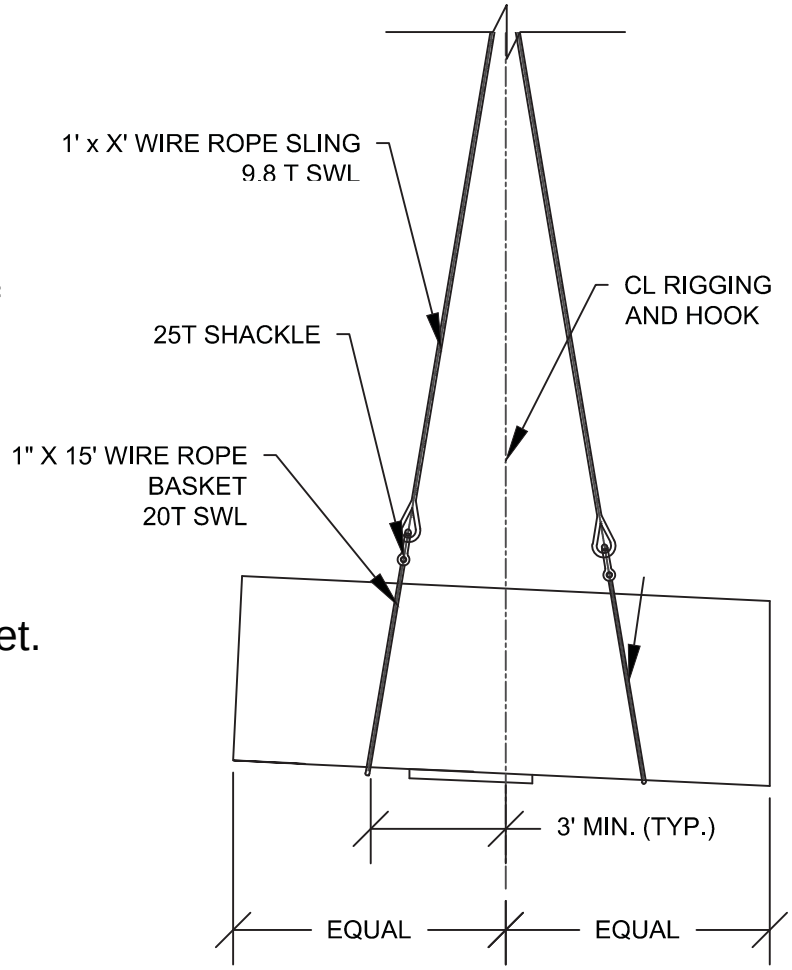

PIER CAP RIGGING

Demo Calcs - Column Removal

Piece weight =

(3.14*1'-4"^2) x 17'-0" x 150pcf = 14.2 kips
16 kips used conservatively

Rigging Check:

Rigging shall be minimum 9.1 T rigging shown OK.

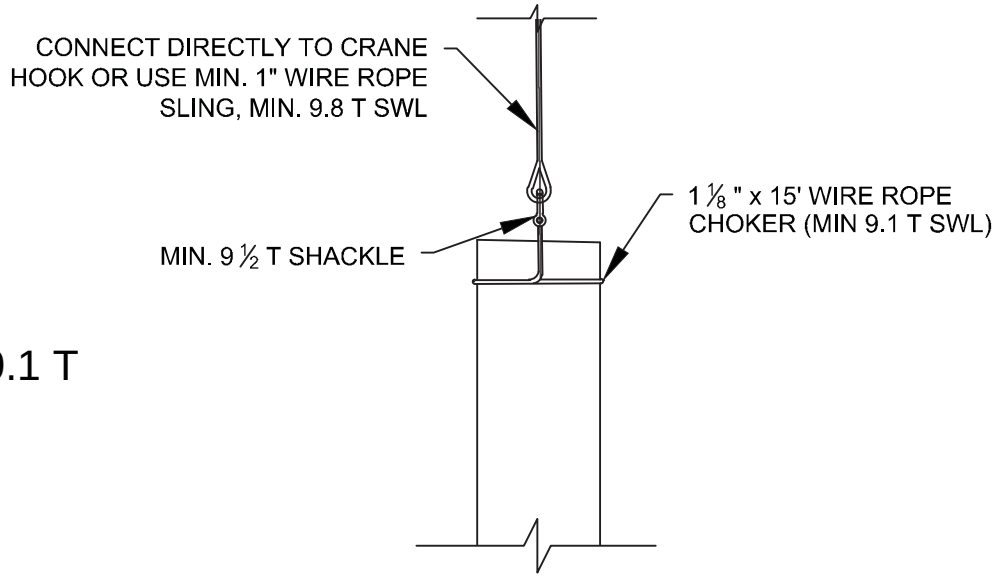

COLUMN RIGGING

1

Single Crane Rigging Check

Center Spans (composite):

Steel Weight = 182 x 80' = 14.6 kips (beams)
Steel Weight = 53' x 10" x 1 1/4" = 2.3 kips (Cover Plates)
Steel Weight = 42.7 x 7' x 10 ea = 3.0 kips (diaphragms)
Concrete Weight = 7.5" x 8" x 80' x 150pcf = 5k

Total = 14.6k + 2.3 k+ 3.0 k+ 5.0 k = 24.9 kips.

for stability, L/B = 80' / 1' = 80' = OK. 1/4 point diaphragms may be removed prior to rigging to girder.

End Spans:

Steel Weight = 135 x 60' = 8.1 kips (beams)
Steel Weight = 42.7 x 7' x 8 ea = 2.4 kips (diaphragms)
Steel Weight = (17.25' x 10" x 1/2") + (17.25' x 13" x 3/8") = 1.2 kips (Cover plates)

Total = 8.1k + 1.2k +2.4 k= 11.7 kips.

for stability, L/B = 60' / 1' = 60' = OK.

Rigging capacity = (24.9 k / sin60) / 2 legs = 14.4 kips (7.2tons)

Rigging shown is adequate

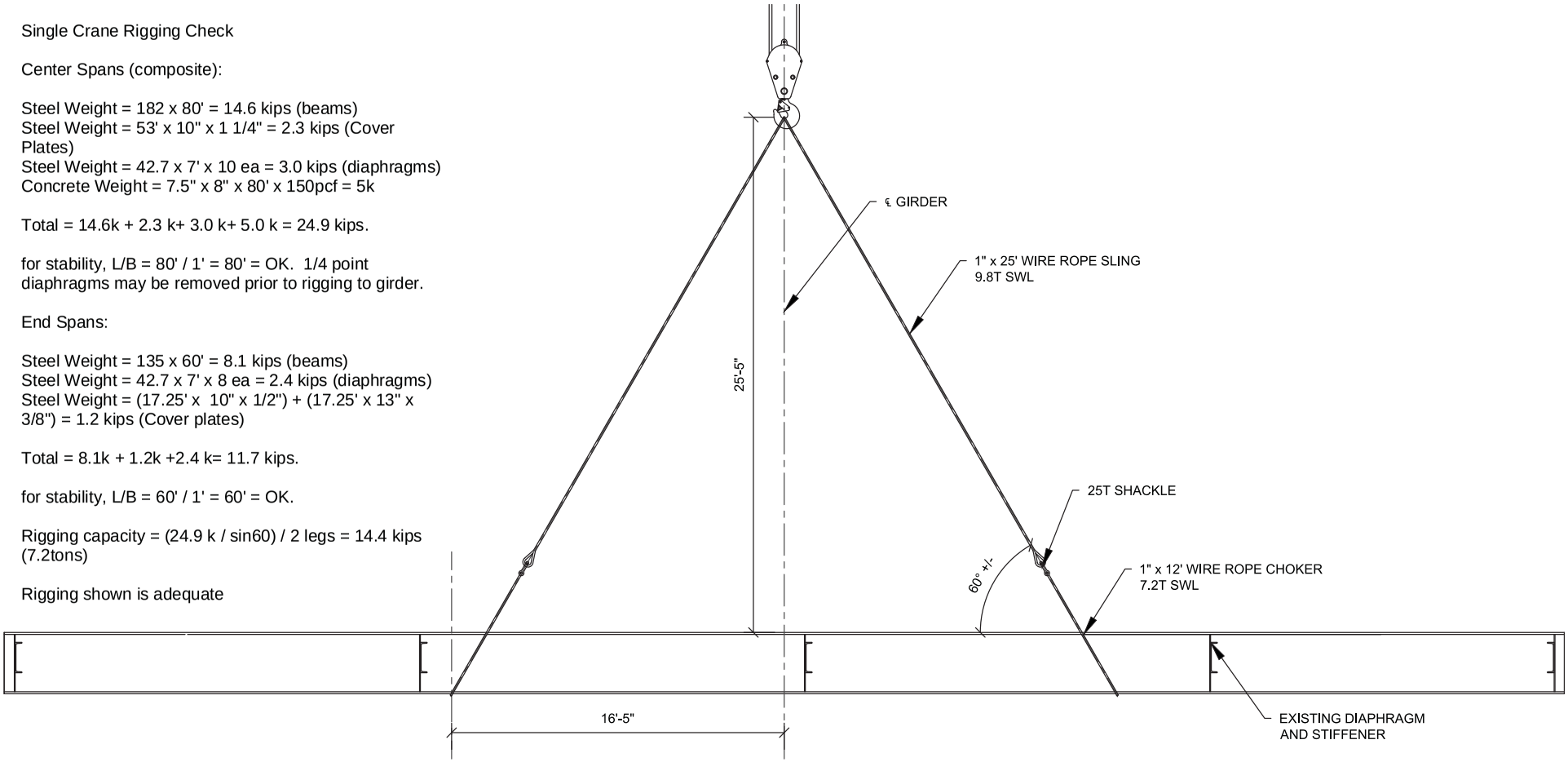

GIRDER DEMOLITION RIGGING - SINGLE CRANE LIFT

Revision No. & Date	Vermont Agency of Transportation			Engineer's Seal	Drawing Status		Name	Date	PCL Civil Constructors, Inc. 3810 Northdale Blvd. Suite 200, Tampa Florida 33624 (813)-264-9500 ; Fax: (813)-264-6689	
						Drawn By	AJT	04/01/15		
	Road No.	County / City	Financial Project ID No.		PRELIMINARY	Design By	AJT	04/01/15	Submittal DEMOLITION PLAN	PCL Project / Job No. I-91 Windsor / Hartford / 5514001
	I-91	Windsor / Hartford	IM 091-2(79)			Check By	TMD	04/07/15	Drawing Title RIGGING DETAILS (1)	Sheet No. D-6

N:\District Office\Engineering\06 TM Tampa Active Projects\5514001 - I-91 Hartford\05 Drawings\01 Demolition\06 CAD Files\Demo_Plan_P.dwg 5/21/2015 5:12 PM

2 Crane Rigging Check

Center Spans (composite):

Steel Weight = 182 x 80' = 14.6 kips (beams)
Steel Weight = 42.7 x 7' x 10 ea = 3.0 kips (diaphragms)
Steel Weight = 53' x 10" x 1 1/4" = 2.3 kips (Cover Plates)
Concrete Weight = 7.5" x 8" x 80' x 150pcf = 5k

Total = 14.6k + 3.0 k+ 2.3k +5.0 k = 24.9 kips.

Rigging capacity = (24.9 k)/ 2 legs = 12.5 kips (6.3 tons)

Rigging shown is adequate

2 Crane Rigging Check

Center Spans (NB Exterior Beam):

Steel Weight = 182 x 80' = 14.6 kips (beams)
Steel Weight = 42.7 x 7' x 10 ea = 3.0 kips (diaphragms)
Steel Weight = 53' x 10" x 1 1/4" = 2.3 kips (Cover Plates)
Concrete Weight = 1'-8" x 1'-6" x 80' x 150pcf = 30k

Total = 14.6k + 3.0 k+ 2.3k +30 k = 50 kips.

Rigging capacity = (50 k)/ 2 legs = 25 kips (12.5 tons)

1" Wire Rope Choker is good for 20T in vertical Basket. 1" Wire Rope OK.

1

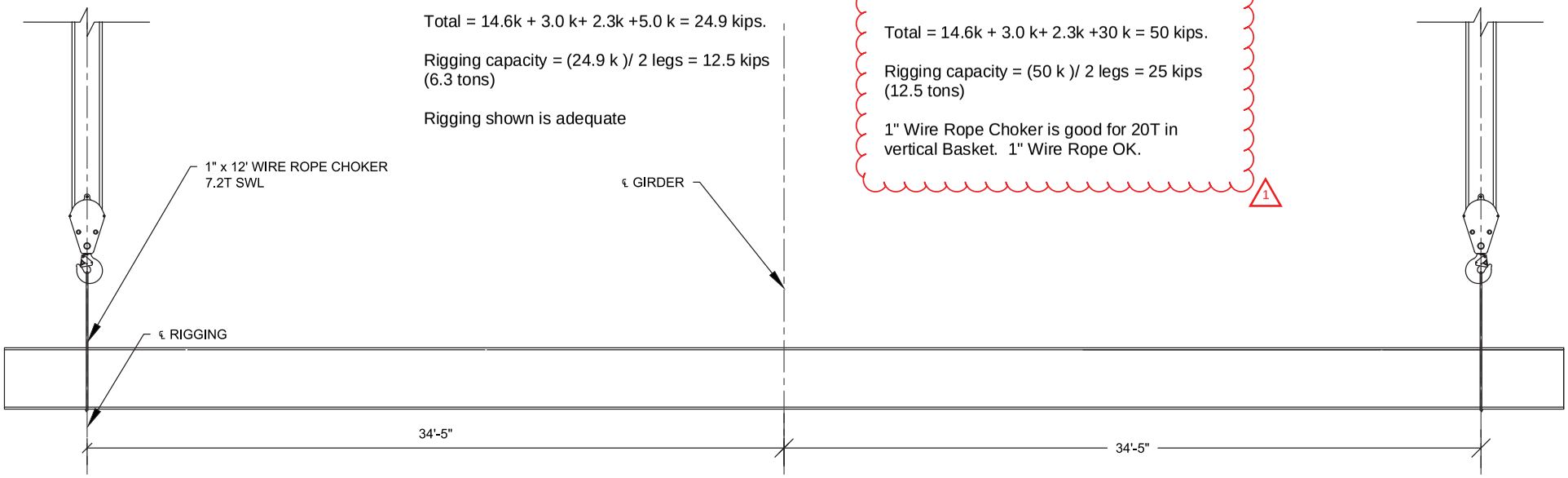

DEMOLITION RIGGING - TWO CRANE LIFT

Revision No. & Date	Vermont Agency of Transportation			Engineer's Seal	Drawing Status		Name	Date	PCL Civil Constructors, Inc. 3810 Northdale Blvd. Suite 200, Tampa Florida 33624 (813)-264-9500 ; Fax: (813)-264-6689	
						Drawn By	AJT	04/01/15		
	Road No.	County / City	Financial Project ID No.		PRELIMINARY	Design By	AJT	04/01/15	Submittal DEMOLITION PLAN	PCL Project / Job No. I-91 Windsor / Hartford / 5514001
	I-91	Windsor / Hartford	IM 091-2(79)			Check By	TMD	04/07/15	Drawing Title RIGGING DETAILS (2)	Sheet No. D-7

M:\District Office\Engineering\06 TIG Tampa Active Projects\5514001 - I-91 Hartford\05 Drawings\01 Demolition\06 CAD Files\Demo_Plan_P.dwg 5/21/2015 5:14 PM

Demo Calcs - Temporary Tie Downs

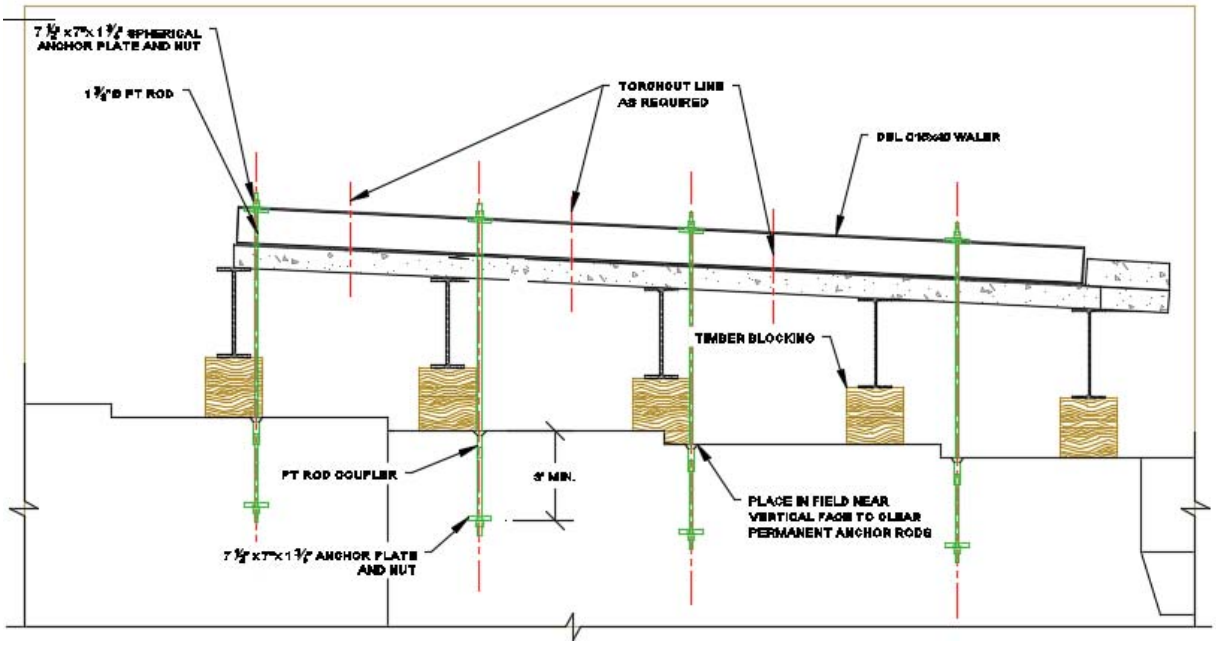

Weights

From existing plans, concrete cross sectional area = 39' = 5.9 KLF
Steel weight = 7 beams x 182 plf x 1.2 (stiff/x-frames) = 1.5 KLF

total weight = 7.4 KLF

40' of suspended span goes to each side, sitting at hinge = 40' x 7.4 = 296 kips
10' of backspan overhangs existing pier, and a minimum of 10' restrains.

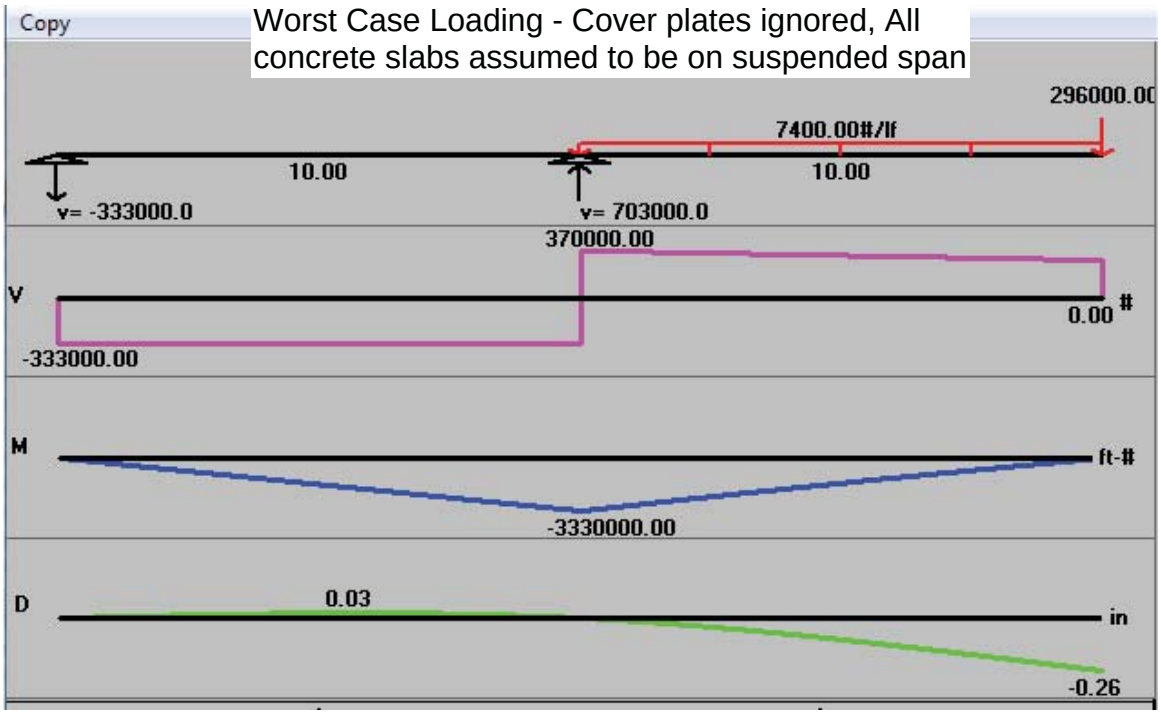

Project:		By:	TMD	Date:	5/18/2015
Project #:		Check By:		Date	
Title:	ASD STEEL DESIGN (AISC 9TH EDITION)				

M_x	475	ft-kip	L_b	15	ft	C_B	1
M_y	9.5	ft-kip	L_x	15	ft	K_x	1
V	53	kip	L_y	15	ft	K_y	1
R	101	kip	a	6	in	C_{mx}	1
P	2.02	kip	T	0	kip	C_{my}	1
N	6	in	F	0	kip	Load	Interior
$t_{stiffener}$	1/2	in					

Section:	W36x135	F_y =	36	ksi	F_u =	65	ksi	
A	39.7	in^2	k	1.6875	in	X_2*10^6	38000	1/ksi
d	35.55	in	$b_f/2t_f$	7.6		I_x	7800	in^4
t_w	0.6	in	h/t_w	54.1		S_x	439	in^3
b_f	11.95	in	r_T	2.93	in	r_x	14	in
t_f	0.79	in	X_1	1520	ksi	I_y	225	in^4
S_y	37.7	in^3	d_c	32.175	in	Z_y	59.7	in^3
r_y	2.38	in	Z_x	509	in^3	E	29000	ksi

Section Classification

Webs	Compact	Flange	Compact

Flexure

L_c	12.29423868	ft					
F_{bx}	21.6	ksi	M_x	790.2	ft-kip	OK	60.1%
F_{by}	27	ksi	M_y	84.825	ft-kip	OK	11.2%

Shear

F_v	14.4	ksi	V_{allow}	307.152	kip	OK	17.3%

Axial

(Kl/r)	75.6302521		C_c	126.0992836			
F_a	15.83441443	ksi	P_{allow}	628.6262528	kips	OK	0.3%

Combined Stresses

f_a	0.050881612	ksi		f_{bx}	12.98405467	ksi	
f_{by}	3.023872679	ksi		f_t	0	ksi	
F_t	21.6	ksi		F'_{ex}	903.3628247	ksi	
F'_{ey}	26.10718563	ksi					
Axial Compression and Bending:				0.716322283		OK	71.6%
AxialTension and Bending:				0.713108927		OK	71.3%

Special Design Considerations (Concentrated Loads) ***Stiffeners required***

Local Flange Bending *Stiffeners required*

P_{bf}	168.3333333	kips	t_{min}	0.864955576	in	NG	109.5%

OK, existing Stiffener at Bearing

Local Web Yielding *Bearing Stiffeners NOT required*

F_{allow}	11.65945166	ksi				OK	49.1%

Web Crippling *Bearing Stiffeners NOT required*

R_{allow}	223.3677466	kips				OK	45.2%

Sidesway Web Buckling *Bearing Stiffeners NOT required*

$(d_c/t_w)/(l/b_f)$	3.560104167		R_{allow}	N/A	kips	OK	0.00%

Compression Buckling of the Web *Stiffeners required*

$(4100t_{wc}^3\sqrt{(F_{yc})})/P_{bf}$	31.56594059	in				NG	101.93%

OK, existing Stiffener at Bearing

Stiffener Design

$h_{stiffener}$	25.4775	in	$w_{stiffener}$	11.95	in	$Cont_{web}$	15	in

Stiffener Axial

(Kl/r)	11.69213951		C_c	126.0353566			
F_a	21.0685532	ksi	P_{allow}	315.5015842	kips	OK	32.01%

Weld Design

l_{weld}	135.88	in	R_w	0.743302914	kip/in	t_{weld}	0.050064182	in

Demo Calcs - Temporary Tie Downs - Cont.

Weights

Per Girder analysis:

Bending Moment = 3330k-ft/ 7 girders = 475 k-ft
Shear = 370 k / 7 girders = 53 kips
Bearing = 703 k / 7 girders = 101 kips
tie down = 333 k / 7 girders = 48 kips each

In Bending, Girders have 40% reserve capacity, cover plates ignored
In Shear, Girders have 80% reserve capacity
In Bearing, Stiffeners are required, the 1/2" stiffeners provided have 50% reserve capacity,

---> no detailed extra analysis required. see analysis following page

Check Tie Down System:

Max Load in Tie down is 2 beam lines, however extremely unlikely that deck is remaining on girders at this time.

Load = 48k x 2 = 96 kips.

Nominal Bar Diameter (in.)(mm)	Ultimate Stress fpu (ksi)(Mpa)	Cross Section Area Aps (in.²)(mm²)	Ultimate Strength fpu Aps (kips)(KN)	Prestressing Force—kips KN			Weight (lbs./ft.) (kg/m)	Minimum* Elastic Bending Radius (ft.)(m)
				0.8fpu Aps	0.7fpu Aps	0.6fpu Aps		
1 in. 26 mm	150 1030	0.85 548	127.5 567	102.0 454	89.3 397	76.5 340	3.01 4.48	52 15.9
1 in. 26 mm	160** 1100	0.85 548	136.0 605	108.8 485	95.2 423	81.6 363	3.01 4.48	49 14.9
1¼ in. 32 mm	150 1030	1.25 806	187.5 834	150.0 662	131.3 584	112.5 500	4.39 6.54	64 19.5
1¼ in. 32 mm	160** 1100	1.25 806	200.0 890	160.0 707	140.0 623	120.0 534	4.39 6.54	60 18.3
1⅜ in. 36 mm	150 1030	1.58 1018	237.0 1055	189.6 839	165.9 738	142.2 633	5.56 8.28	72 22.0
1⅜ in. 36 mm	160** 1100	1.58 1018	252.8 1125	202.3 899	177.0 787	151.7 675	5.56 8.28	67 20.4
1¾ in.	150	2.62	400	320	280	240	9.23	92

PT Bar good for 237 kips ultimate. 237k / 97k = FOS 2.4 ---> Bars and Hardware are adequate

For a Double C15x40, Max spacing between supports = 97 k X spacing/4 / 93in^3 = (0.6 x 50ksi), (M/S = .6Fy)

max spacing = 9.58'. this assumes zero contribution from the deck, which is conservative.

PCL CIVIL CONSTRUCTORS INC.
COPYRIGHT DATE _____

DATE: 3/5/15
SHEET ____ OF ____

CHECK CAPACITY OF EMBEDDED PT ROD PER ACI 318

STEEL STRENGTH

$N_{sa} = n A_{se,N} f_{uta}$ ACI 318-08 D-3

$n = 1$

$A_{se,N} = 1.58 in^2$

$f_{uta} = 237 ksi$

$N_{sa} = 374.46 k$

$\phi N_{steel} = (0.75)(374.46k)$ ACI 318-08 D-1

$= 280.85 k$

PULLOUT STRENGTH

$N_{pn} = \psi_{c,p} N_p$ ACI 318-08 D-14

$\psi_{c,p} = 1.4$

$N_p = 8 A_{brg} f'_c$ ACI 318-08 D-15

$A_{brg} = 7" \times 7"$ ANCHOR PL, $49 in^2$

$f'_c = 3.5 ksi$

$N_{pn} = (1.4)(8)(3.5 ksi)(49 in^2)$

$= 1,920.8 k$

$\phi N_{pn} = (0.7)(1920.8)$ ACI 318-08 D-1

$= 1344.56 k$

CONCRETE BREAKOUT

$h_{ef} = 36\ in$

$e_{c1} = 0$

$e_{c2} = 0$

$C_a\ Min = 18\ in$

$\psi_{c,N} = 1.25$

$C_{ac} = 0$

$k_c = 24$

$\lambda = 1$

$f'_c = 3.5\ ksi$

$A_{Nc} = (18+18)[(1.5)(36)(2)]$ ACI 318-08 D.5.2.1

$= 3888\ in^2$, $A_{Nco} = 11{,}664\ in^2$

$N_b = 24\lambda\sqrt{f'_c}\,h_{ef}^{5/3}$

$= 557.3\ k$

$\psi_{ec1} = 1.0$

$\psi_{ec2} = 1.0$

$\psi_{cp} = 1.0$

$\psi_{ed} = 0.7 + 0.3\left(\frac{C_{a,min}}{1.5h_{ef}}\right) \leq 1.0$ ACI 318-08 D-11

$= 0.8$

$N_{cb} = \left(\frac{A_{Nc}}{A_{Nco}}\right)\psi_{ed}\psi_c\psi_{cd}N_b$

$= 148.6k$

$\phi N_{cb} = (0.7)(148.6k)$

$= 104.02\ k$ ⇐ LIMITING VALUE

CRANE INFO:		GROVE RTC-8080	TADANO GR-750XL	LINK BELT LS-248H II	LINK BELT 298 HSL
BOOM LENGTH:	ft	90	88.6, TELE MODE I	120	120
PIECE TYPE		DECK OVERHANG	DECK OVERHANG	DECK OVERHANG	DECK OVERHANG
MAX. PIECE WEIGHT	lbs	14,000	14,000	14,000	14,000
PICK WEIGHT + RIGGING:	lbs	16,330	16,330	22,913	22,913
MAX. CRANE RADIUS:	ft	55	45	100	110
CRANE CAPACITY:	ft	20,400	22,200	31,400	31,700
% OF CHART:		80%	74%	73%	72%

CRANE INFO:		GROVE RTC-8080	TADANO GR-750XL	LINK BELT LS-248H II	LINK BELT 298 HSL
BOOM LENGTH:	ft	90	88.6, TELE MODE I	120	120
PIECE TYPE		DECK SECTION	DECK SECTION	DECK SECTION	DECK SECTION
MAX. PIECE WEIGHT	lbs	12,000	12,000	12,000	12,000
PICK WEIGHT + RIGGING:	lbs	14,330	14,330	20,913	20,913
MAX. CRANE RADIUS:	ft	55	50	110	117
CRANE CAPACITY:	ft	20,400	18,100	27,500	28,900
% OF CHART:		70%	79%	76%	72%

CRANE INFO:		GROVE RTC-8080	TADANO GR-750XL
BOOM LENGTH:	ft	90	88.6, TELE MODE I
PIECE TYPE		SUSPENDED GIRDER	SUSPENDED GIRDER
MAX. PIECE WEIGHT	lbs	25,000	25,000
PICK WEIGHT + RIGGING:	lbs	14,830	14,830
MAX. CRANE RADIUS:	ft	55	45
CRANE CAPACITY:	ft	20,400	22,200
% OF CHART:		73%	67%

CRANE INFO:		LINK BELT LS-248H II	LINK BELT 298 HSL
BOOM LENGTH:	ft	120	120
PIECE TYPE		END SPAN GIRDER	END SPAN GIRDER
MAX. PIECE WEIGHT	lbs	11,700	11,700
PICK WEIGHT + RIGGING:	lbs	20,613	20,613
MAX. CRANE RADIUS:	ft	110	117
CRANE CAPACITY:	ft	27,500	28,900
% OF CHART:		75%	71%

CRANE INFO:		GROVE RTC-8080	TADANO GR-750XL	LINK BELT LS-248H II	LINK BELT 298 HSL
BOOM LENGTH:	ft	90	88.6, TELE MODE I	120	120
PIECE TYPE		CAP SECTION	CAP SECTION	CAP SECTION	CAP SECTION
MAX. PIECE WEIGHT	lbs	23,000	23,000	23,000	23,000
PICK WEIGHT + RIGGING:	lbs	25,330	25,330	31,913	31,913
MAX. CRANE RADIUS:	ft	40	35	100	70
CRANE CAPACITY:	ft	35,800	34,700	31,400	58,800
% OF CHART:		71%	73%	102%	54%

CRANE INFO:		GROVE RTC-8080	TADANO GR-750XL
BOOM LENGTH:	ft	90	88.6, TELE MODE I
PIECE TYPE		COLUMN	COLUMN
MAX. PIECE WEIGHT	lbs	16,000	16,000
PICK WEIGHT + RIGGING:	lbs	18,330	18,330
MAX. CRANE RADIUS:	ft	55	40
CRANE CAPACITY:	ft	20,400	27,700
% OF CHART:		90%	66%

CRANE INFO:		GROVE RTC-8080	TADANO GR-750XL
BOOM LENGTH:	ft	90	88.6, TELE MODE I
PIECE TYPE		SUSP. GIRDER NB G6	SUSP. GIRDER NB G6
MAX. PIECE WEIGHT	lbs	25,000	25,000
PICK WEIGHT + RIGGING:	lbs	12,500	12,500
MAX. CRANE RADIUS:	ft	55	45
CRANE CAPACITY:	ft	20,400	22,200
% OF CHART:		61%	56%

1

PCL CONSTRUCTION LEADERS

CRANE LIFT STUDY ANALYSIS - LONG FORM

(All weights in lbs. unless noted otherswise)

I-91 NB/SB Bridges - 5515002 Date: _____

LOAD INFORMATION:

What is to be lifted: Existing Beam/Girder More than one crane ☐ Yes ☑ No

Initial location: Attach Lift Diagram (plan view) if required

Final set location: Attach Lift Diagram (plan view) if required

Verified Weight (weight of load, lbs.) 15,000 How was weight verified: Shop Drawings

Lift Points: ☐ Per Manufactuer

☐ Other, attach details and calculations

Maximum radius of lift: 55 Quadrants All

Maximum elevation of lift: Attach lift diagram (elevation view) if required

Maximum allowable wind speed for lift Per Manitowoc, 30 mph (Attach calculations)

GROUND CONDITIONS: Nature of soil Compated Fill Safe Bearing Capacity 2 (tpsf)

Is the use of crane mats or compacted fill required: ☑ Yes ☐ No

CRANE CONFIGURATION: Model/SN Grove RT 880E Boom Length/Type 100 ft., LATTICE

Maximum Capacity 160,000 Jib Length/Type N/A

Boom Point Elevation at Maximum Working Radius 71.1

Cable Diameter 3/4" Block Capacity RT 80 Ton No. of Parts 4

Anti-two block device ☑ Yes ☐ No Barge/Crane List N/A

CALCULATIONS

Weight of Load 15,000

+ Crane Capacity Deduction 1,656

+ Plus Rigging Weight 674

= Gross Weight 17,330 Maximum Lift Capacity for Radius 22,450

% of Crane Chart 77% (Gross weight/Crane capacity) See District Policy

RESPONSIBLE PERSONNEL (Print Name & Sign)

Project Manager _____

Level 1 Lift Specialist _____

Level 2 Lift Specialist (If Critical Lift) _____

Level 3 Lift Specialist (If Engineered Lift) _____

Superintendent _____

Lift Supervior _____

Operator _____

WORKSHEET

RIGGING

Sling Length		Vertical Length		Max. Sling Load	Tons
Sling Angle		Sling Load Angle Factor	N/A		

	Type	Size	Capacity	Qty	Weight	Capacity > Load?
Slings	5/8" 6-Part Wire 38 ft.- Vertical	38 ft.	17 Ton	4	556.0	OK
Slings	None	0	0	0	0.0	
Slings	None	0	0	0	0.0	
Shackles	Forged Screw Pin	25	25 Ton	4	117.8	
Shackles	None	None	0	0	0.0	
Eye Bolts						
Picking Device	None	N/A	N/A	0	0.0	
Addititional Items	None	0	0	0	0.0	

CONSERVATIVE RIGGING WEIGHTS USED FOR EXISTING GIRDER AND COLUMN

1

TOTAL WEIGHT OF RIGGING 673.8

CRANE CAPACITY DEDUCTIONS	Type	Gross Weight
Block	RT 80 Ton	1,319
Effective Jib Weight		
Boom Extension		
Hook and Overhaul Ball	None	0
Whip Line below boom tip		42
Main Load Cable below tip		296
Stowed Jib or Boom Extension		
TOTAL DEDUCTIONS		1,656

Final checks prior to lift

	Verify gross weight and load chart capacities (de-rated if crane on barge)
	Inspected crane and verified components (Daily logs & annual certification checked)
	Inspected rigging for condition and size
	Inspect load line and drum wrap configuration
	Ground stability. Outrigger pads/blocking sized correctly? Barge/crane list (de-rated chart)
	Distance to nearest utility_____ (above and below ground)
	Weather and wind load consideration, checked & verified at time of lift
	Pre-lift meeting with rigging crew, operator, and signal person (attached sign in sheet
	Rigging drawings attached
	Method of communication (radios, hand signals, etc.) checked & verified
	Lift abort procedures checked and verified. JHA/PSI conducted

PCL CONSTRUCTION LEADERS

CRANE LIFT STUDY ANALYSIS - LONG FORM

(All weights in lbs. unless noted otherwise)

I-91 NB/SB Bridges - 5515002 Date: _____

LOAD INFORMATION:

What is to be lifted: Existing Beam/Girder More than one crane ☐ Yes ☑ No

Initial location: Attach Lift Diagram (plan view) if required

Final set location: Attach Lift Diagram (plan view) if required

Verified Weight (weight of load, lbs.) 14,000 How was weight verified: Shop Drawings

Lift Points: ☐ Per Manufactuer

☐ Other, attach details and calculations

Maximum radius of lift: 110 Quadrants All

Maximum elevation of lift: Attach lift diagram (elevation view) if required

Maximum allowable wind speed for lift Per Manitowoc, 30 mph (Attach calculations)

GROUND CONDITIONS: Nature of soil Compacted Fill Safe Bearing Capacity 2 (tpsf)

Is the use of crane mats or compacted fill required: ☑ Yes ☐ No

CRANE CONFIGURATION: Model/SN Link-Belt 298 HSL Boom Length/Type 150 ft., LATTICE

Maximum Capacity 171,400 Jib Length/Type N/A

Boom Point Elevation at Maximum Working Radius 47.8

Cable Diameter 1 1/8" Block Capacity 250 No. of Parts 8

Anti-two block device ☑ Yes ☐ No Barge/Crane List N/A

CALCULATIONS

Weight of Load	14,000		
+ Crane Capacity Deduction	7,965		
+ Plus Rigging Weight	948		
= Gross Weight	22,913	Maximum Lift Capacity for Radius	31,700
% of Crane Chart	72%	(Gross weight/Crane capacity) See District Policy	

RESPONSIBLE PERSONNEL (Print Name & Sign)

Project Manager _____

Level 1 Lift Specialist _____

Level 2 Lift Specialist (If Critical Lift) _____

Level 3 Lift Specialist (If Engineered Lift) _____

Superintendent _____

Lift Supervior _____

Operator _____

1

WORKSHEET

RIGGING

Sling Length		Vertical Length		Max. Sling Load	Tons
Sling Angle		Sling Load Angle Factor	N/A		

	Type	Size	Capacity	Qty	Weight	Capacity > Load?
Slings	5/8" 6-Part Wire 38 ft.- Vertical	38 ft.	17 Ton	4	556.0	OK
Slings	7/8" 6-Part Wire Rope Choker	16 ft.	29 Ton	2	274.0	CONSERVATIVE RIGGING WEIGHTS USED
Slings	None	0	0	0	0.0	
Shackles	None	None	0	0	0.0	
Shackles	Forged Screw Pin	25	25 Ton	4	117.8	
Eye Bolts						
Picking Device	None	N/A	N/A	0	0.0	
Addititional Items	None	0	0	0	0.0	

TOTAL WEIGHT OF RIGGING 947.8

CRANE CAPACITY DEDUCTIONS	Type	Gross Weight
Block	250 Ton	5,721
Effective Jib Weight		
Boom Extension		
Hook and Overhaul Ball	20 Ton	1,255
Whip Line below boom tip		94
Main Load Cable below tip		896
Stowed Jib or Boom Extension		
TOTAL DEDUCTIONS		7,965

Final checks prior to lift

	Verify gross weight and load chart capacities (de-rated if crane on barge)
	Inspected crane and verified components (Daily logs & annual certification checked)
	Inspected rigging for condition and size
	Inspect load line and drum wrap configuration
	Ground stability. Outrigger pads/blocking sized correctly? Barge/crane list (de-rated chart)
	Distance to nearest utility_____ (above and below ground)
	Weather and wind load consideration, checked & verified at time of lift
	Pre-lift meeting with rigging crew, operator, and signal person (attached sign in sheet
	Rigging drawings attached
	Method of communication (radios, hand signals, etc.) checked & verified
	Lift abort procedures checked and verified. JHA/PSI conducted

PCL CONSTRUCTION LEADERS

CRANE LIFT STUDY ANALYSIS - LONG FORM

(All weights in lbs. unless noted otherwise)

I-91 NB/SB Bridges - 5515002 Date: _____

LOAD INFORMATION:

What is to be lifted: Existing Beam/Girder More than one crane ☐ Yes ☑ No

Initial location: Attach Lift Diagram (plan view) if required

Final set location: Attach Lift Diagram (plan view) if required

Verified Weight (weight of load, lbs.) 14,000 How was weight verified: Shop Drawings

Lift Points: ☐ Per Manufactuer

☐ Other, attach details and calculations

Maximum radius of lift: 100 Quadrants All

Maximum elevation of lift: Attach lift diagram (elevation view) if required

Maximum allowable wind speed for lift Per Manitowoc, 30 mph (Attach calculations)

GROUND CONDITIONS: Nature of soil Compacted Fill Safe Bearing Capacity 2 (tpsf)

Is the use of crane mats or compacted fill required: ☑ Yes ☐ No

CRANE CONFIGURATION: Model/SN Link-Belt LS-248H II Boom Length/Type 150 ft., LATTICE

Maximum Capacity 171,400 Jib Length/Type N/A

Boom Point Elevation at Maximum Working Radius 66.2

Cable Diameter 1 1/8" Block Capacity 200 No. of Parts 8

Anti-two block device ☑ Yes ☐ No Barge/Crane List N/A

CALCULATIONS

Weight of Load 14,000

+ Crane Capacity Deduction 8,309

+ Plus Rigging Weight 948

= Gross Weight 23,256 Maximum Lift Capacity for Radius 31,400

% of Crane Chart 74% (Gross weight/Crane capacity) See District Policy

RESPONSIBLE PERSONNEL (Print Name & Sign)

Project Manager _____

Level 1 Lift Specialist _____

Level 2 Lift Specialist (If Critical Lift) _____

Level 3 Lift Specialist (If Engineered Lift) _____

Superintendent _____

Lift Supervior _____

Operator _____

WORKSHEET

RIGGING

Sling Length		Vertical Length		Max. Sling Load	Tons
Sling Angle		Sling Load Angle Factor	N/A		

	Type	Size	Capacity	Qty	Weight	Capacity > Load?
Slings	5/8" 6-Part Wire 38 ft.- Vertical	38 ft.	17 Ton	4	556.0	OK
Slings	7/8" 6-Part Wire Rope Choker	16 ft.	29 Ton	2	274.0	CONSERVATIVE RIGGING WEIGHTS USED
Slings	None	0	0	0	0.0	
Shackles	None	None	0	0	0.0	
Shackles	Forged Screw Pin	25	25 Ton	4	117.8	
Eye Bolts						
Picking Device	None	N/A	N/A	0	0.0	
Addititional Items	None	0	0	0	0.0	

TOTAL WEIGHT OF RIGGING 947.8

CRANE CAPACITY DEDUCTIONS	Type	Gross Weight
Block	250 Ton	5,721
Effective Jib Weight		
Boom Extension		
Hook and Overhaul Ball	20 Ton	1,255
Whip Line below boom tip		94
Main Load Cable below tip		1,239
Stowed Jib or Boom Extension		
TOTAL DEDUCTIONS		8,309

Final checks prior to lift

	Verify gross weight and load chart capacities (de-rated if crane on barge)
	Inspected crane and verified components (Daily logs & annual certification checked)
	Inspected rigging for condition and size
	Inspect load line and drum wrap configuration
	Ground stability. Outrigger pads/blocking sized correctly? Barge/crane list (de-rated chart)
	Distance to nearest utility_____ (above and below ground)
	Weather and wind load consideration, checked & verified at time of lift
	Pre-lift meeting with rigging crew, operator, and signal person (attached sign in sheet
	Rigging drawings attached
	Method of communication (radios, hand signals, etc.) checked & verified
	Lift abort procedures checked and verified. JHA/PSI conducted

SERIAL NUMBER: XXXX-XXXX

CRANE RATING MANUAL

FOR REFERENCE ONLY

298 HSL

250 TON LATTICE BOOM CRAWLER CRANE

- 68” x 80” TUBE BOOM WITH 30’ PEAK SECTION
- 1.25” DIAMETER DUAL PENDANTS
- WITH 25’ LIVE MAST
- 30” X 36” TUBULAR JIB
- LBCE CRAWLER LOWER 19’ 3” GAUGE AND 27’ 9” OVERALL LENGTH

For Replacement, Order Part Number: P3P0029
(061812)

Link-Belt®
CONSTRUCTION EQUIPMENT

® Link-Belt is a registered trademark.

General Dimensions

A	Centerline Sprocket To Centerline Idler (Nominal)	24’ (*7.32m*)
B	Overall Length (Lower)	27’–9” (*8.46m*)
C	Tailswing (Upper Counterweight)	19’–5.0” (*5.92m*)
D	Working Height	14’–4” (*4.37m*)
E	Ground Clearance (Upper Counterweight)	61.6” (*1.56m*)
F	Centerline Of Rotation To Centerline Of Boom Foot	53.5” (*1.36m*)
G	Boom Angle (Maximum)	82°
H	Operator’s Cab Height	12’–10.5” (*3.92m*)
J	Boom Foot Pin Height	97” (*2.46m*)

K	Track Shoe Width	48” (*1.22m*) Std. 60” (*1.52m*) Opt.
L	Ground Clearance (Frame)	17.8” (*0.45m*)
M	Overall Width – Lower [48” *(1.22m)* Shoes]	23’–3” (*7.08m*)
	Overall Width – Lower [60” *(1.52m)* Shoes]	24’–3” (*7.39m*)
N	Overall Width – Lower With Steps [48” *(1.22m)* Shoes]	25’–3.5” (*7.71m*)
	Overall Width – Lower With Steps [60” *(1.52m)* Shoes]	26’–3.5” (*8.01m*)
P	Distance Between Tracks [48” *(1.22m)* Shoes]	15’–3” (*4.64m*)
	Distance Between Tracks [60” *1.52m)* Shoes]	14’–3” (*4.27m*)
R	Upper Width (Over Catwalks)	14’–1” (*4.29m*)
S	Upper Width (Catwalks Removed)	10’–6” (*3.20m*)
T	Track Height	57.3” (*1.46m*)

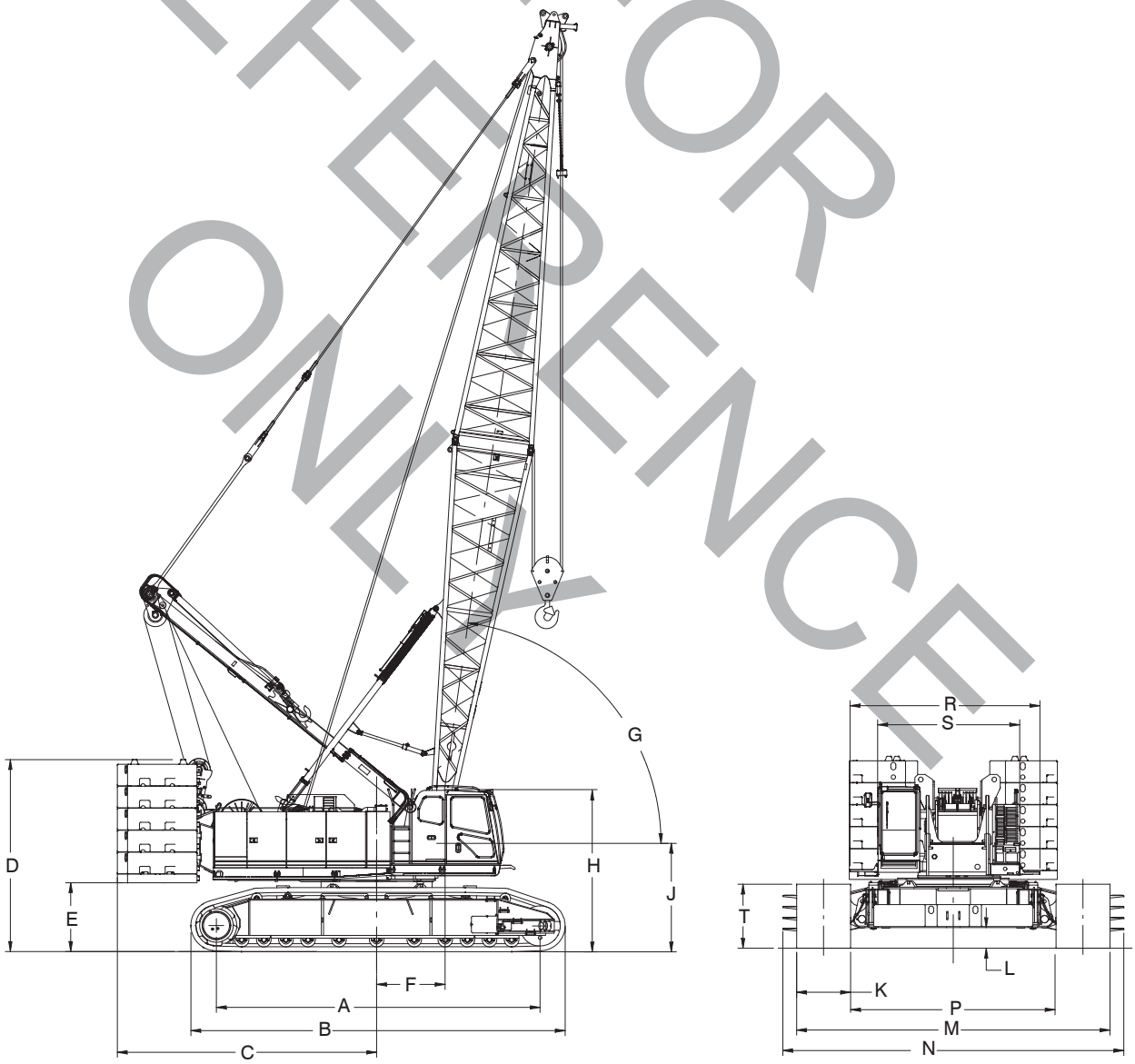

FOR REFERENCE ONLY

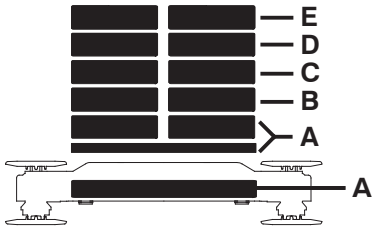

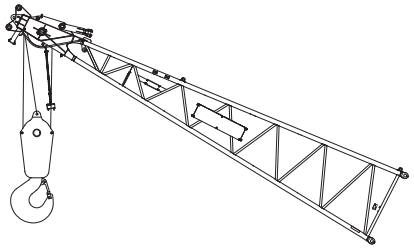

Main Boom Capacities – 120’

Load Radius (ft)	Boom Angle (deg)	Over End Blocked	360° Rotation				Load Radius (ft)
		ABCDE+A CTWT (lb)	ABCDE+A CTWT (lb)	ABCD+A CTWT (lb)	ABC+A CTWT (lb)	AB+A CTWT (lb)	
		Curve 1	Curve 2	Curve 3	Curve 4	Curve 5	
21.16	82.0	326,800	326,800	317,700	305,000	292,200	21.16
25	80.1	282,000	282,000	271,000	257,600	225,600	25
30	77.7	231,300	231,300	215,800	191,800	167,700	30
35	75.3	190,400	190,400	171,400	152,100	132,700	35
40	72.8	162,900	157,700	141,600	125,500	109,400	40
50	67.7	125,300	116,400	104,300	92,200	80,100	50
60	62.4	100,100	91,600	81,900	72,200	62,500	60
70	56.9	84,100	74,900	66,900	58,800	50,700	70
80	51.0	70,900	63,000	56,100	49,200	42,300	80
90	44.5	60,800	54,100	48,000	42,000	35,900	90
100	37.2	52,700	47,100	41,700	36,300	30,900	100
110	28.4	47,000	41,400	36,600	31,700	26,900	110
117.22	20.0	42,200	38,000	33,500	28,900	24,400	117.22

Note: Refer To Page 21 For “Capacity Deductions”.

FOR REFERENCE ONLY

Link-Belt®
CONSTRUCTION EQUIPMENT

FOR REFERENCE ONLY

LS - 248H II

CRANE RATING MANUAL

- 68” x 80” TUBULAR BOOM
- 30’ OPEN THROAT PEAK SECTION
- 15’ HAMMERHEAD PEAK SECTION
- 1.0” DIAMETER PENDANTS
- WITH LIVE MAST
- LBCE CRAWLER LOWER, 18’10” GAGE AND 28’6” OVERALL LENGTH

SERIAL NUMBER **XXXX-XXXX**

For Replacement, Order Part Number H3P0038.
(010802)

® Link-Belt is a registered trademark.

GENERAL DIMENSIONS

GENERAL DESCRIPTION		DIMENSION
A	OPERATOR'S CAB HEIGHT	12' – 0.00"
B	TREADMEMBER HEIGHT	53.50"
C	TREADMEMBER LENGTH	28'– 6.0"
D	TAIL SWING – CTWT	18'– 10.62"
D1	MAX. LIVE MAST SWING	25' – 0.0"
D2	MAX. BALANCE ARM SWING	24' – 6.0"
E	GROUND CLEARANCE – CTWT	63.81"
F	OVERALL HEIGHT – CTWT	11' – 5.55"
G	WIDTH OVER CATWALKS	13'– 7.78"
H	UPPER WIDTH	10'– 11.50"
J	HEIGHT OF BOOM FOOT PIN	90.5"
K	TRACK SHOE WIDTH	44.0"
M	OVERALL TRACK WIDTH	22' – 4.0"
N	MIN. GROUND CLEARANCE	21.62"
P	TRACK WIDTH W/ LWR CTWT	23' – 6.0"

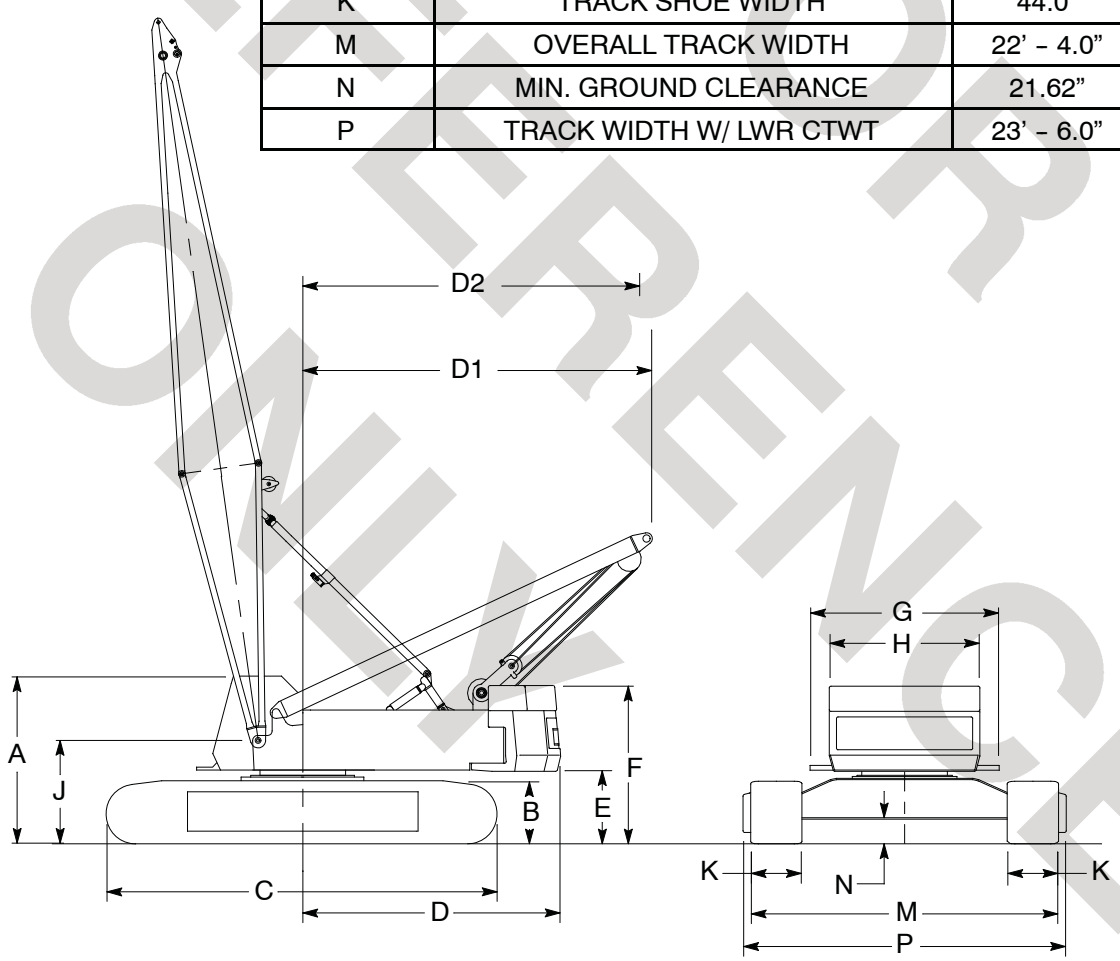

REFERENCE ONLY

NOTES:

1. Dimensions D1 and D2 are approximate and should be considered as reference only. Dimension D2 is applicable to luffing attachment applications only.
2. Individual job site obstacles must be considered and ample clearance given for all hazards near the crane working range.

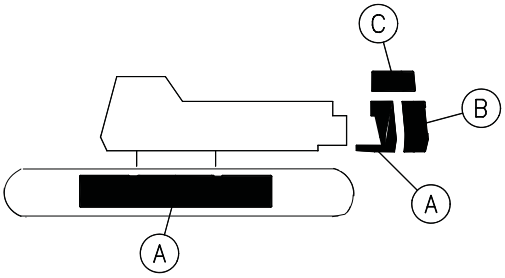

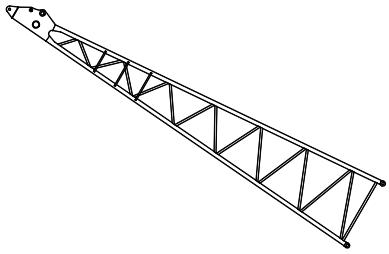

MAIN BOOM CAPACITIES - 120 FT OPEN THROAT TUBE BOOM

Load Radius (ft)	Boom Angle (deg)	360° Rotation					Over End Blocked	Load Radius (ft)
		ABC + A CTWT (lb)	ABC CTWT (lb)	AB CTWT (lb)	A CTWT (lb)	0 CTWT (lb)	ABC + A CTWT (lb)	
20.0	82.0	186,200	186,200	186,200	148,900	106,900	186,200	20.0
25	79.6	173,900	173,900	157,300	97,900	69,800	173,900	25
30	77.1	156,900	144,900	117,000	72,200	51,000	156,900	30
35	74.7	128,900	115,000	92,600	56,700	39,700	131,100	35
40	72.2	106,500	94,900	76,300	46,300	32,100	112,600	40
50	67.1	78,500	69,800	55,800	33,200	22,600	86,900	50
60	61.8	61,600	54,600	43,400	25,400	16,800	69,300	60
70	56.2	50,300	44,500	35,100	20,100	13,000	58,300	70
80	50.3	42,200	37,200	29,200	16,300	10,200	49,000	80
90	43.7	36,100	31,800	24,700	13,400	8,100	41,800	90
100	36.3	31,400	27,500	21,200	11,200	6,400	36,100	100
110	27.2	27,500	24,000	18,400	9,400	5,100	31,400	110
120	13.4	24,300	21,100	16,000	7,800	3,900	27,500	120

Note: Refer To Page 13 For "Capacity Deductions" Caused By Any Jib Attachment Or Tip Extension.

REFERENCE ONLY

Hook Balls

20 Ton *(18.1mt)* Swivel Hook Ball* ❶

Width	21.75 in	*(0.55m)*
Height	41.75 in	*(1.06m)*
Weight	1,255 lb	*(569kg)*

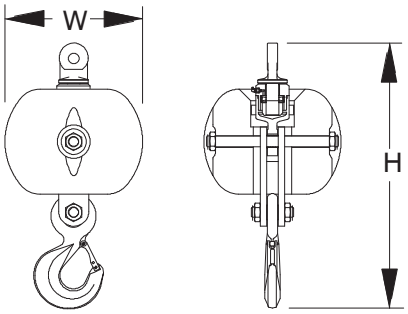

20 Ton *(18.1mt)* Non–Swivel Hook Ball* ❶

Width	21.75 in	*(0.55m)*
Height	39 in	*(0.99m)*
Weight	1,211 lb	*(549kg)*

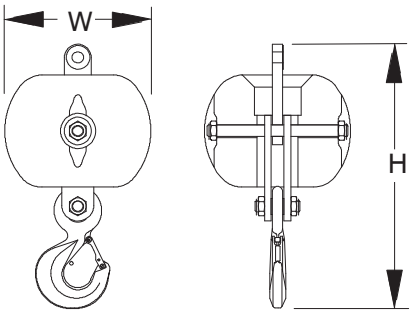

Hook Blocks

40 Ton *(36.3mt)* 1–Sheave Hook Block* ❶

Width1	25.50 in	*(0.65m)*
Width2	28.75 in	*(0.73m)*
Width3	15 in	*(0.38m)*
Height	60.75 in	*(1.54m)*
Weight	2,293 lb	*(1 040kg)*

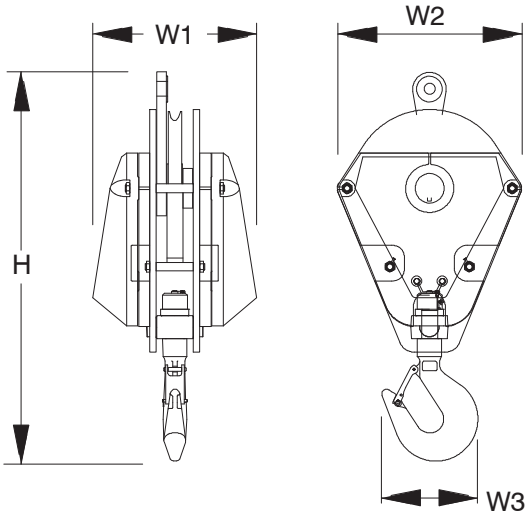

Number inside black circle "❶" = # of components
* – Optional equipment

165 Ton *(150mt)*
5–Sheave Hook Block* ❶

Width1	22 in	*(0.56m)*
Width2	28.75 in	*(0.73m)*
Width3	28.25 in	*(0.72m)*
Height	81.50 in	*(2.07m)*
Weight	3,392 lb	*(1 539kg)*

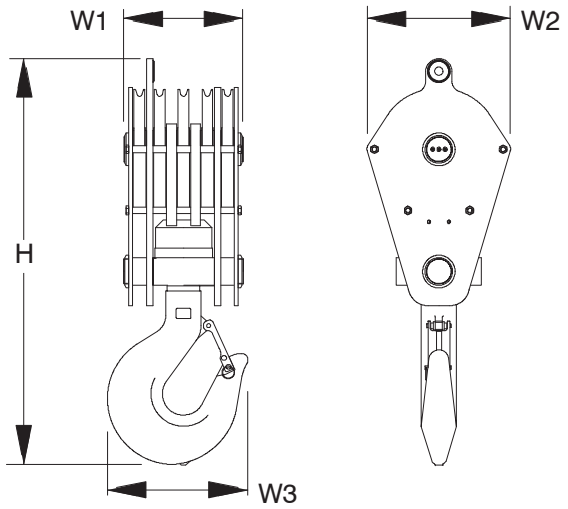

200 Ton *(181.4mt)*
5–Sheave Hook Block* ❶

Width1	25 in	*(0.63m)*
Width2	28.75 in	*(0.73m)*
Width3	35 in	*(0.89m)*
Height	58 in	*(1.47m)*
Weight	4,300 lb	*(1 950kg)*

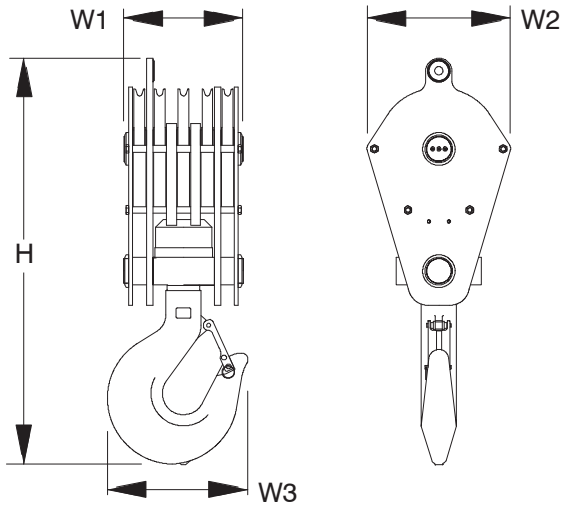

250 Ton *(226.8mt)*
6–Sheave Hook Block* ❶

Width1	27 in	*(0.69m)*
Width2	35.25 in	*(0.90m)*
Width3	34.75 in	*(0.88m)*
Height	95.50 in	*(2.43m)*
Weight	5,721 lb	*(2 595kg)*

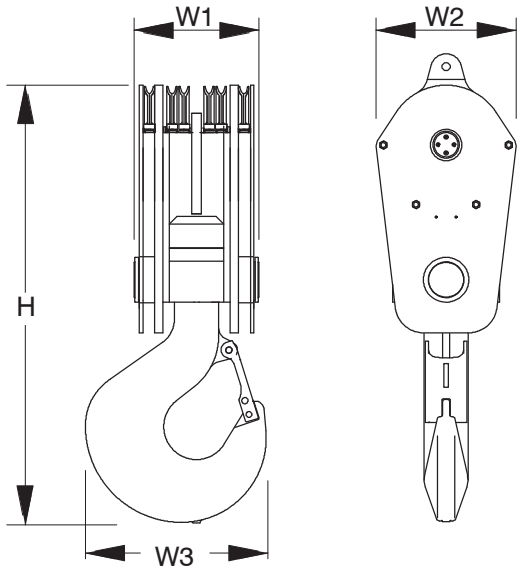

Number inside black circle "❶" = # of components
* – Optional equipment

Load Hoist Performance

Front & Rear Drums – 28mm Wire Rope

Rope Layer	Maximum Line Pull		No Load Line Speed		Full Load Line Speed		Pitch Diameter		Layer		Total	
	lb	*kg*	ft/min	*m/min*	ft/min	*m/min*	in	*mm*	ft	*m*	ft	*m*
1	59,234	*26 869*	383.7	*116.9*	191.8	*58.5*	24.6	*624.0*	192.9	*58.8*	192.9	*58.8*
2	54,356	*24 656*	413.0	*125.9*	206.5	*62.9*	26.4	*671.7*	278.5	*84.9*	400.6	*122.1*
3	50,220	*22 780*	442.3	*134.8*	221.1	*67.4*	28.3	*719.3*	222.5	*67.8*	623.1	*189.9*
4	46,669	*21 169*	471.6	*143.7*	235.8	*71.9*	30.2	*767.0*	237.1	*72.3*	860.2	*262.2*
5	43,587	*19 771*	500.9	*152.7*	250.4	*76.3*	32.1	*814.6*	251.9	*76.8*	1,112.1	*339.0*
6	40,887	*18 546*	530.2	*161.6*	265.1	*80.8*	33.9	*862.3*	266.7	*81.3*	1,378.8	*420.2*
7	38,502	*17 465*	559.5	*170.5*	279.7	*85.3*	35.8	*910.0*	281.3	*85.7*	1,660.1	*506.0*

Boom Hoist Drums – 22mm Wire Rope

Rope Layer	Maximum Line Pull		No Load Line Speed		Full Load Line Speed		Pitch Diameter		Layer		Total	
	lb	*kg*	ft/min	*m/min*	ft/min	*m/min*	in	*mm*	ft	*m*	ft	*m*
1	103,657	*47 019*	99.9	*30.4*	54.8	*16.7*	26.1	*663.0*	150.3	*45.8*	150.3	*45.8*
2	97,096	*44 043*	105.6	*32.2*	57.9	*17.7*	27.6	*701.1*	159.0	*48.5*	309.3	*94.3*
3	91,316	*41 421*	111.3	*33.9*	61.1	*18.6*	29.1	*739.3*	167.7	*51.1*	477.0	*145.4*
4	86,186	*39 094*	117.1	*35.7*	64.2	*19.6*	30.6	*777.4*	176.2	*53.7*	653.2	*199.1*
5	81,601	*37 014*	122.8	*37.4*	67.4	*20.5*	32.1	*815.6*	185.0	*56.4*	838.2	*255.5*
6	77,480	*35 145*	128.6	*39.2*	70.5	*21.5*	33.6	*853.7*	193.6	*59.0*	1,031.8	*314.5*
7	73,755	*33 455*	134.3	*40.9*	73.7	*22.5*	35.1	*891.9*	202.2	*61.6*	1,234.0	*376.1*

Third Hoist Drum – 1.0 in *(25.4mm)* Wire Rope

Rope Layer	Maximum Line Pull		No Load Line Speed		Full Load Line Speed		Pitch Diameter		Layer		Total	
	lb	*kg*	ft/min	*m/min*	ft/min	*m/min*	in	*mm*	ft	*m*	ft	*m*
1	29,090	*13 195*	271	*82.6*	230	*70.1*	21	*533.4*	131	*39.9*	131	*39.9*
2	26,560	*12 048*	297	*90.5*	251	*76.5*	23	*584.2*	143	*43.6*	274	*83.5*
3	24,440	*11 086*	322	*98.1*	273	*83.2*	25	*635.0*	156	*47.5*	430	*131.1*
4	22,630	*10 265*	348	*106.1*	295	*89.9*	27	*685.8*	168	*51.2*	598	*182.3*
5	21,070	*9 557*	374	*114.0*	317	*96.6*	29	*736.6*	181	*55.2*	779	*237.4*
6	– – –	– – –	– – –	– – –	– – –	– – –	– – –	– – –	193	*58.8*	972	*296.3*

Wire Rope Application	Diameter		Type	Max. Permissible Load		Wire Rope Descriptions
	in	*mm*		lb	*kg*	
Front Hoist	– –	*28*	ZB	33,900	*15 377*	4 strand, low torque, right regular lay
Rear Hoist	– –	*28*	ZB	33,900	*15 377*	4 strand, low torque, right regular lay
Boom Hoist	– –	*22*	LB	25,000	*11 340*	6 x 25 (6 x19 Class) – Filler Wire – Preformed – I.W.R.C – Right Lay – Regular Lay Compacted Strands
Third Drum	1.0	*25.4*	RB	22,760	*10 324*	18 x 19 Rotation Resistant Compacted Strand – High Strength – Preformed, Right Regular Lay

Technical Data

Specifications & Capacities

RTC 8080

Series II
80 US ton
80 metric ton

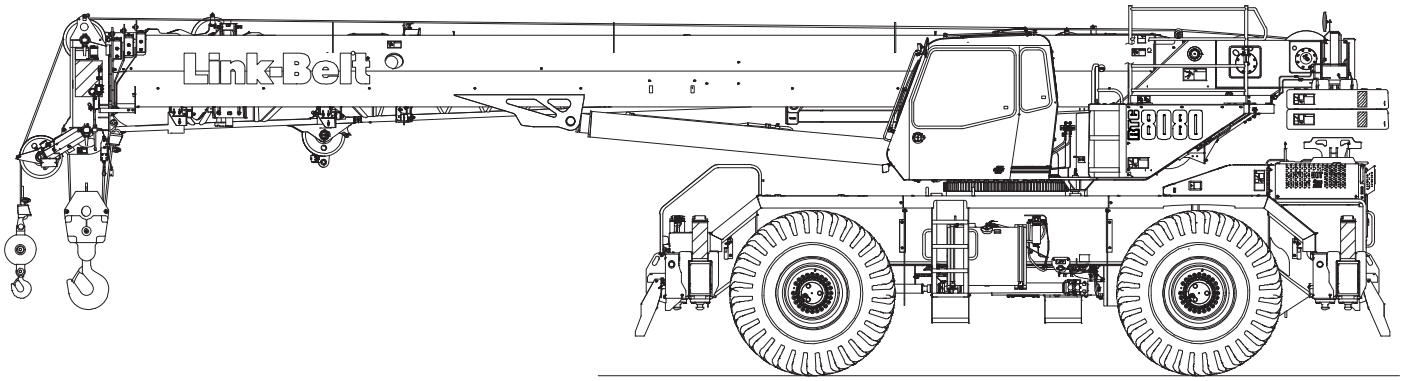

CAUTION: This material is supplied for reference use only. Operator must refer to in−cab Crane Rating Manual and Operator's Manual to determine allowable crane lifting capacities and assembly and operating procedures.

General Dimensions

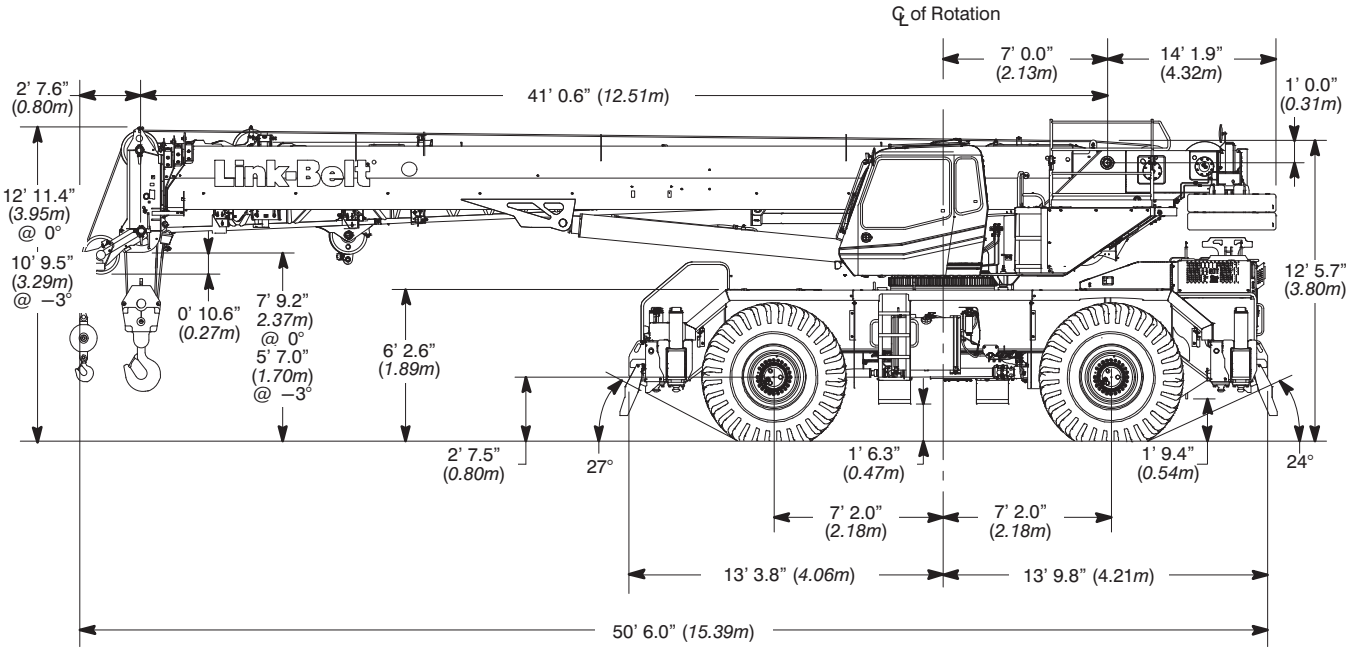

Turning Radius – Front Wheel (4x2) Steering	English	*Metric*
Wall to wall over carrier	48' 3"	*14.71m*
Wall to wall over boom attachment	60' 1"	*18.31m*
Curb to curb	46' 8"	*14.22m*
Centerline of tire	45' 3"	*13.79m*

Turning Radius – All Wheel (4x4) Steering	English	*Metric*
Wall to wall over carrier	27' 10"	*8.48m*
Wall to wall over boom attachment	38' 11"	*11.86m*
Curb to curb	26' 0"	*7.92m*
Centerline of tire	24' 6"	*7.47m*

Tail Swing	English	*Metric*
With counterweight	14' 2"	*4.32m*
Without counterweight	13' 2"	*4.01m*

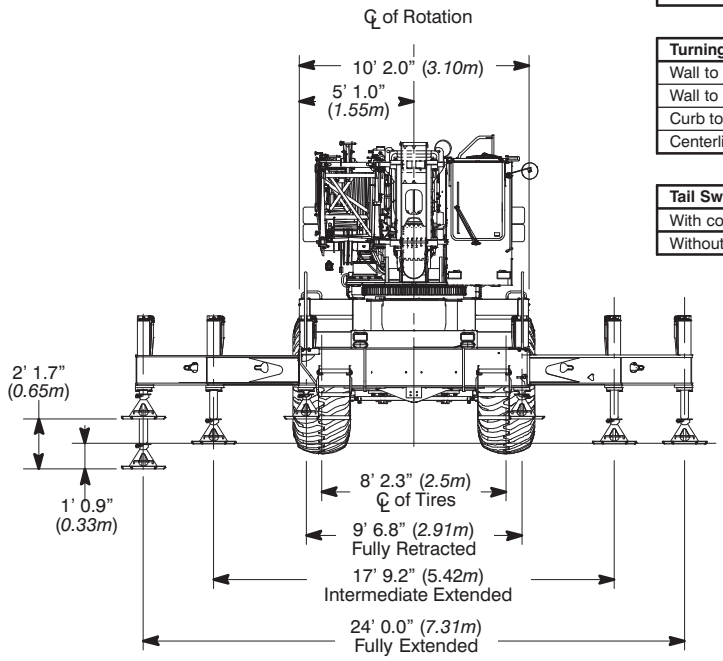

Not To Scale

■ Load Hoist System

Load Hoist Performance

Main (Front) and Auxiliary (Rear) Winches — 3/4 in (*19mm*) Rope										
	Maximum Line Pull		Normal Line Speed		High Line Speed		Layer		Total	
Layer	lb	*kN*	ft/min	*m/min*	ft/min	*m/min*	ft	*m*	ft	*m*
1	18,500	*82.29*	172	*52.4*	341	*103.9*	114	*34.7*	114	*34.7*
2	17,071	*75.94*	187	*57.0*	371	*113.1*	124	*37.8*	238	*72.5*
3	15,798	*70.27*	202	*61.6*	401	*122.2*	134	*40.8*	372	*113.4*
4	14,701	*65.39*	217	*66.1*	430	*131.1*	144	*43.9*	516	*157.3*
5	13,747	*61.15*	232	*70.7*	460	*140.2*	154	*46.9*	670	*204.2*
6	---	---	---	---	---	---	164	*50.0*	834	*254.2*

Wire Rope Application		in	*mm*	Type	lb	*kN*
Main (Rear) Winch	Standard	3/4	*19*	18x19 rotation resistant — right regular lay (Type RB)	12,920	*57.47*
	Optional	3/4	*19*	4 strand, low torque, right regular lay (Type GC)	22,400	*99.64*
	Optional	3/4	*19*	34x7 rotation resistant — right regular lay (Type ZB)	15,600	*69.39*
Auxiliary (Front) Winch	Standard	3/4	*19*	18x19 rotation resistant — right regular lay (Type RB)	12,920	*57.47*
	Optional	3/4	*19*	4 strand, low torque, right regular lay (Type GC)	22,400	*99.64*
	Optional	3/4	*19*	34x7 rotation resistant — right regular lay (Type ZB)	15,600	*69.39*

2M Main and Optional Auxiliary Winches

- Axial piston, full and half displacement (2—speed) motors driven through planetary reduction unit for positive control under all load conditions.
- Grooved lagging
- Power up/down mode of operation
- Hoist drum cable follower — optional
- Drum rotation indicator
- Drum diameter: 16 in (*40.6cm*)
- Rope length:
  - Main: 670 ft (*204.2m*)
  - Auxiliary: 500 ft (*152.4m*) or 670 ft (*204.2m*)
- Maximum rope storage: 834 ft (*254.2m*)
- Terminator style socket and wedge

■ Hydraulic System

Counterbalance Valves — All hoist motors, boom extend cylinders, and boom hoist cylinders are equipped with counterbalance valves to provide load lowering and prevents accidental load drop when hydraulic power is suddenly reduced.

Hydraulic Oil Coolers — One carrier mounted cooler removes heat from the hydraulic oil. Remote mounted on right side of the carrier.

■ Counterweight

Standard — Total of 19,200 lb (*8 709.0kg*) counterweight consisting of two counterweights pinned to the upper with capacities for:

- 0 lb (*0kg*) counterweight*
- 9,600 lb (*4 354kg*) counterweight
- 19,200 lb (*8 709.0kg*) counterweight

* Travel speed limited to 5 mph.

Optional — Hydraulic counterweight removal activated by a hand—held controller with enough cable to access the pins on each side of the counterweights.

Axle Loads

Base crane with zero counterweight and full tank of fuel		Gross Vehicle Weight (1)		Upper Facing Front				Upper Facing Rear			
				Front Axles		Rear Axles		Front Axles		Rear Axles	
		lb	*kg*	lb	*kg*	lb	*kg*	lb	*kg*	lb	*kg*
	Tier 4i/ Stage IIIB	81,125	*36 798*	52,515	*23 820*	28,610	*12 977*	21,959	*9 960*	59,166	*26 837*
	Tier 3/ Stage IIIA	80,992	*36 737*	52,573	*23 847*	28,419	*12 891*	22,017	*9 987*	58,975	*26 751*
Pintle hook, front		13	*6*	17	*8*	−5	*−2*	17	*8*	−5	*−2*
Pintle hook, rear		13	*6*	−5	*−2*	18	*8*	−5	*−2*	18	*8*
Hydro−gas suspension		56	*25*	20	*9*	36	*16*	20	*9*	36	*16*
Operator in cab		250	*113*	140	*64*	110	*50*	110	*50*	140	*64*
Hoist drum follower − main		69	*31*	−24	*−11*	93	*42*	93	*42*	−24	*−11*
Auxiliary winch with 500 ft (*152.4m*) wire rope		616	*279*	−75	*−34*	691	*313*	691	*313*	−75	*−34*
Hoist drum follower − auxiliary		69	*31*	−6	*−3*	75	*34*	75	*34*	−6	*−3*
Substitute 500 ft (*152.4m*) wire rope with 670 ft (*204.2m*) − auxiliary		213	*97*	−7	*−3*	220	*100*	220	*100*	−7	*−3*
Remove 670 ft (*202.4m*) wire rope from rear (main) winch		−856	*−388*	187	*85*	−1,043	*−473*	−1,043	*−473*	187	*85*
Remove 500 ft (*152.4m*) wire rope from front (auxiliary) winch		−643	*−292*	21	*10*	−664	*−301*	−664	*−301*	21	*10*
Counterweight removal		300	*136*	−89	*−40*	389	*176*	389	*176*	−89	*−40*
One slab of counterweight on upper		9,600	*4 355*	−3,356	*−1 522*	12,956	*5 877*	12,956	*5 877*	−3,356	*−1 522*
Two slabs of counterweight on upper		19,200	*8 709*	−6,712	*−3 045*	25,912	*11 754*	25,912	*11 754*	−6,712	*−3 045*
Emergency steering		258	*117*	40	*18*	218	*99*	218	*99*	40	*18*
360° mechanical swing lock		140	*64*	72	*33*	68	*31*	68	*31*	72	*33*
Air conditioning		128	*58*	37	*17*	91	*87*	91	*87*	37	*17*
Floodlight to front of boom base section		11	*5*	15	*7*	−4	*−2*	−4	*−2*	15	*7*
Fly mounting brackets to boom base section for fly options		225	*102*	306	*39*	−81	*−37*	−81	*−37*	306	*139*
38 ft (*11.6m*) offsettable fly − stowed		1,659	*753*	2,895	*1 313*	−1,236	*−561*	−1,236	*−561*	2,895	*1 313*
38−64 ft (*11.6−19.5m*) offsettable fly − stowed		2,401	*1 089*	3,888	*1 764*	−1,487	*−675*	−1,487	*−675*	3,888	*1 764*
10−38−64 ft (3.0−*11.6−19.5m*) offsettable fly − stowed		2,762	*1 253*	4,728	*2 145*	−1,966	*−892*	−1,966	*−892*	4,728	*2 145*
Auxiliary lifting sheave		110	*50*	327	*148*	−217	*−98*	−217	*−98*	327	*148*
80 ton (*72.5mt*) 5−sheave hook block at bumper		1,406	*638*	2,134	*968*	−728	*−330*	−728	*−330*	2,134	*968*
60 ton (*54.4mt*) 4−sheave hook block at bumper		1,109	*503*	1,683	*763*	−574	*−260*	−574	*−260*	1,683	*763*
10 ton (*9.1mt*) hook ball at bumper		583	*264*	885	*401*	−302	*−137*	−302	*−137*	885	*401*
8.5 ton (*7.7mt*) hook ball at bumper		360	*163*	546	*248*	−186	*−84*	−186	*−84*	546	*248*
80 ton (*72.5mt*) 5−sheave hook block at boom head		1,406	*638*	4,031	*1 828*	−2,625	*−1 191*	−2,625	*−1 191*	4,031	*1 828*
60 ton (*54.4mt*) 4−sheave hook block at boom head		1,109	*503*	3,180	*1 442*	−2,071	*−939*	−2,071	*−939*	3,180	*1 442*
10 ton (*9.1mt*) hook ball at boom head		583	*264*	1,672	*758*	−1,089	*−494*	−1 089	*−494*	672	*758*
8.5 ton (*7.7mt*) hook ball at boom head		360	*163*	1,032	*468*	−672	*−305*	−672	*−305*	1,032	*468*

Tire	Maximum Allowable Axle Load @ 20 mph (*32.2km/h*)
29.5 x 25 (28−PR)	55,000 lb (*24 948kg*)

(1) Adjust gross vehicle weight and axle loading according to component weight.
Note: All weights are ±3%.

USE 1,600 # 75 TON BLOCK
FOR RIGGING WEIGHT
CALCULATIONS

Main Boom Working Range Diagram — Standard

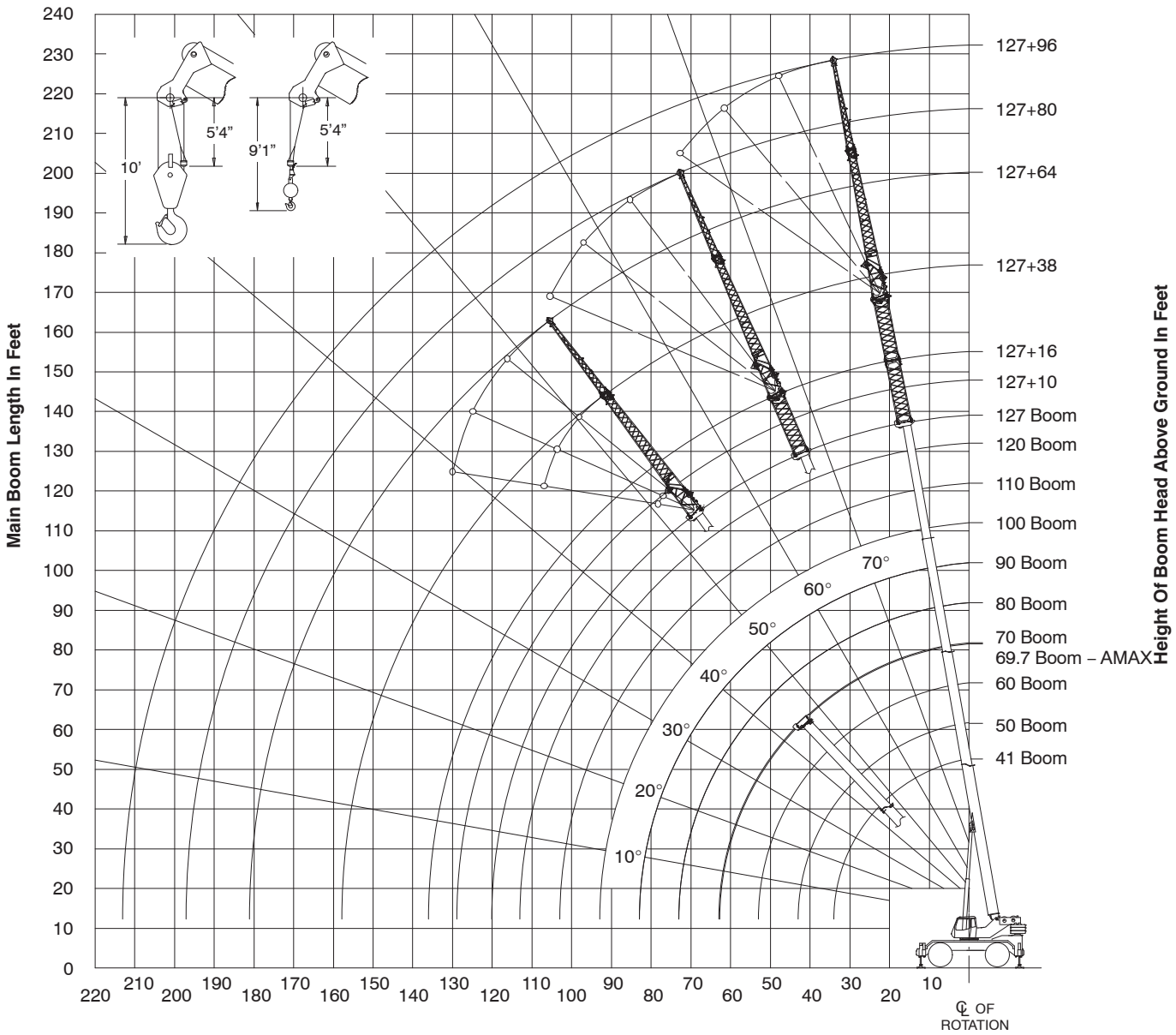

Notes:

1. **Boom geometry shown is for unloaded condition and crane standing level on firm supporting surface. Boom deflection, subsequent radius, and boom angle change must be accounted for when applying load to hook.**
2. **Maximum and minimum boom angles are equal to the values listed in the capacity charts for each boom length.**

Main Boom Lift Capacity Charts — Standard

19,200 lb Counterweight — Fully Extended Outriggers — 360° Rotation
(All Capacities Are Listed In Pounds)

Radius (ft)	Boom Length (ft)										Radius (ft)
	41	50	60	70	80	90	100	110	120	127	
10	160,000	105,600	104,100	66,700							10
12	138,200	105,600	104,100	66,700	48,000						12
15	111,100	105,600	94,200	66,700	48,000	48,600					15
20	81,500	81,200	79,100	63,600	48,000	48,600	45,900	37,300			20
25	63,400	63,100	62,800	54,600	48,000	48,600	41,400	37,300	27,100	23,200	25
30	51,000	50,800	50,600	47,600	48,000	47,100	37,700	34,100	27,100	23,200	30
35		43,100	43,700	44,100	44,400	42,800	34,400	30,900	27,100	23,200	35
40		34,200	35,000	35,400	35,600	35,800	31,300	28,200	25,900	23,200	40
45			28,200	28,700	28,900	29,100	28,500	25,800	23,700	22,600	45
50			23,200	23,800	24,000	24,200	24,400	23,700	21,800	20,700	50
55				19,900	20,300	20,400	20,600	20,700	20,100	19,100	55
60				16,900	17,200	17,400	17,600	17,700	17,700	17,700	60
65					14,700	15,000	15,100	15,200	15,300	15,300	65
70					12,700	13,000	13,100	13,200	13,300	13,300	70
75						11,300	11,500	11,600	11,700	11,800	75
80						9,800	10,000	10,200	10,300	10,300	80
85							8,700	8,900	9,000	9,100	85
90							7,600	7,800	7,900	8,000	90
95								6,800	6,900	7,000	95
100								6,000	6,100	6,200	100
105									5,300	5,400	105
110									4,600	4,700	110
115										4,100	115

This information is not for crane operation. Operator must refer to the in—cab information for crane operation. Rated lifting capacities shown on fully extended outriggers do not exceed 85% of the tipping loads and on tires do not exceed 75% of the tipping loads.

TADANO

GR-750XL

75 Ton Capacity (68 Metric Tons)

HYDRAULIC ROUGH TERRAIN CRANE

DIMENSIONS

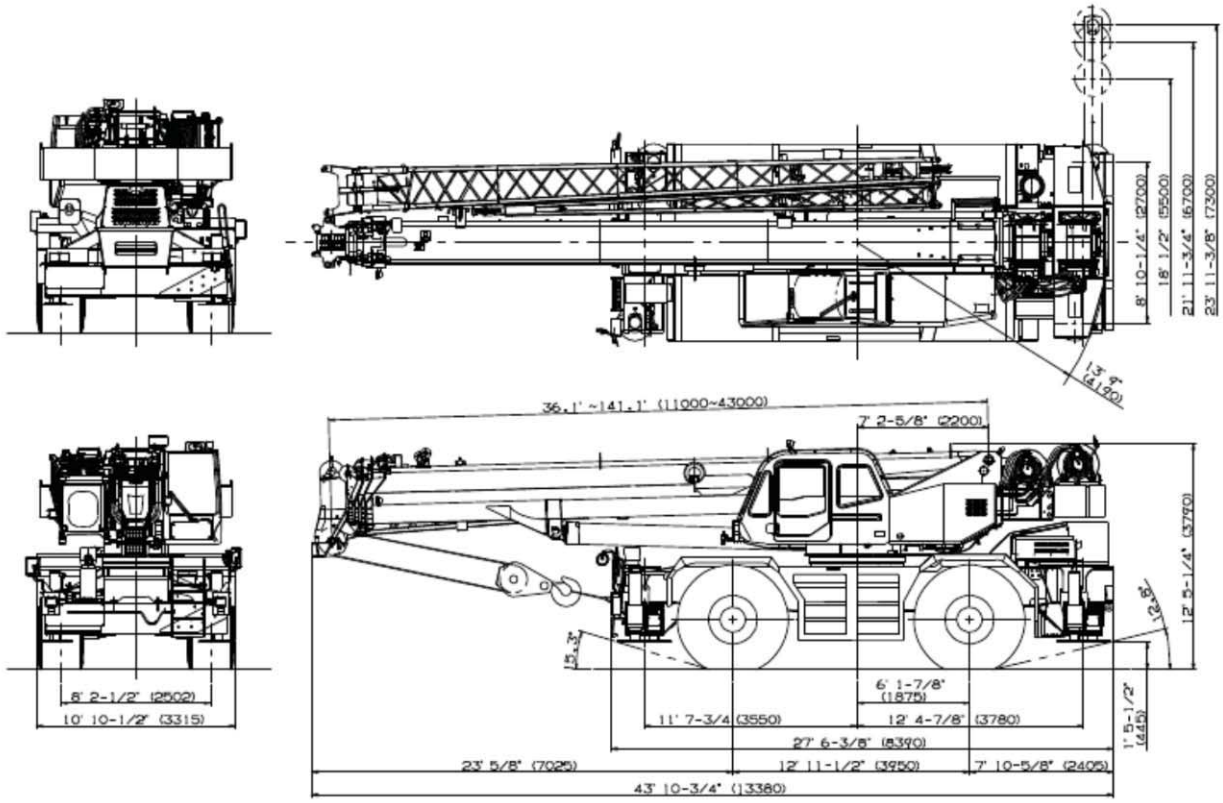

Note : Dimension is with boom angle at -1.6 degree.

GENERAL DIMENSIONS
(29.5 - 25 Tires)

	Feet	Meters
Turning radius		
4 wheel steer	22' 4"	6.8
2 wheel steer	39' 1"	11.9
Tail swing of counterweight	13' 9"	4.19

Specifications are subject to change without notice.
Specification effective with serial number 548831 and up.

STANDARD EQUIPMENT

- Five section full power partially synchronized boom 36.1'~141.1' (11.0 m~43.0 m)
- 33.2' or 58.1' (10.1 m or 17.7 m) bi-fold lattice jib (tilt type) with 3.5°, 25° or 45° pinned offsets and self storing pins.
- Auxiliary lifting sheave (single top) stowable
- Variable speed main hoist with grooved drum, cable follower and 771' of 3/4" cable.
- Variable speed auxiliary hoist with grooved drum, cable follower and 436' of 3/4" cable.
- Drum rotation indicator (audible,visible and thumper type) main and auxiliary hoist
- Anti-Two block device (overwind cutout)
- Boom angle indicator
- Tadano electronic load moment indicator system (AML-C)
- Outrigger extension length detector
- Electronic crane monitoring system
- Tadano twin slewing system and 360° positive slewing lock
- Self centering finger control levers with pilot control
- Control pedals for boom elevating and boom telescoping
- 3 way adjustable cloth seat with armrests, high back and seat belt
- Tilt-telescoping steering wheel
- Tinted safety glass and sun visor
- Front windshield wiper and washer
- Roof window wiper and washer
- Power window (cab door)
- Rear view mirrors (right and left side)
- Mirror for main and auxiliary hoists
- Cigarette lighter and ashtray
- Cab floor mat
- Pump disconnect in operator's cab
- Hydraulic oil cooler
- Hot water cab heater and air conditioner
- Positive control
- Quick reeving type bi-fold jib
- Work lights
- Independently controlled outriggers
- Four outrigger extension positions
- Self-storing outrigger pads
- Cummins QSB6.7 turbo charged after cooled engine (270HP) with exhaust brake
- Electronic controlled automatic transmission driven by torque converter
- 4 X 4 X 4 drive/steer
- Non-spin rear differential
- Automatic rear axle oscillation lockout system
- 29.5-25 22PR(OR) tires or 29.5-25 28PR(OR) tires
- Disc brakes
- Fenders
- Air dryer
- Water separator with filter(high filtration)
- Engine over-run alarm
- Back-up alarm
- Low oil pressure/high water temp. warning device (visual)
- Rear steer centering light
- Air cleaner dust indicator
- Full instrumentation package
- Complete highway light package
- Tool storage compartment
- Tire inflation kit
- 24 volt electric system
- 6.2 ton (5.6 metric ton) hook ball with swivel
- 75 ton (68 metric ton) - 7 sheaves with swivel hook block and safety latch for 3/4"(19mm) wire rope
- Towing hooks-Front and rear
- Lifting eyes
- Hook block tie down (front bumper)
- Weighted hook storage compartment
- Halogen head lamp
- Telematics (machine data logging and monitoring system) with HELLO-NET via internet
- Fuel consumption monitor
- Eco mode system

HOISTING PERFORMANCE

LINE SPEEDS AND PULLS

Layer	Main or auxiliary hoist - 14-1/4" (0.362m) drum			
	Line speeds[1]		Line pulls Available[2]	
	F.P.M.	m/min	Lbs.	kgf
1st	331	101	16,500	7,480
2nd	361	110	15,200	6,900
3rd	390	119	13,800	6,260
4th	420	128	12,700	5,760
5th	450	137	11,900	5,400
6th	479	146	11,000	4,990
7th[3]	509	155	10,300	4,670

* Maximum permissible line pull may be affected by wire rope strength.
Maximum lifting capacity per line (Main & Aux.): 12,300 lbs (5,600 kg)

[1] Line speeds based only on hook block, not loaded.
[2] Developed by machinery with each layer of wire rope, but not based on rope strength or other limitation in machinery or equipment.
[3] Seventh layer of wire rope are not recommended for hoisting operations.

DRUM WIRE ROPE CAPACITIES

Wire rope layer	Main and auxiliary drum grooved lagging 3/4" (19mm) wire rope			
	Rope per layer		Total wire rope	
	Feet	Meters	Feet	Meters
1	112.2	34.2	112.2	34.2
2	122.3	37.3	234.5	71.5
3	132.2	40.3	366.8	111.8
4	142.3	43.4	509.1	155.2
5	152.2	46.4	661.4	201.6
6	162.4	49.5	823.8	251.1
7	172.5	52.6	996.4	303.7

DRUM DIMENSIONS

	Inch	mm
Root diameter	14-1/4"	362
Length	23-5/8"	600
Flange diameter	25-7/8"	657

WARNING AND OPERATING INSTRUCTIONS FOR USING THE LOAD MOMENT INDICATOR (AML-C)

1. When operating crane on outriggers:
   - Set P.T.O. switch to "ON".
   - Press the outrigger mode select key to register for the outrigger operation. Press the register key, then the outrigger mode indicative symbol changes from flashing to a solid light.
   - Press the lift mode select key to select the lift status that corresponds to the actual boom configuration.
     Each time the lift mode select key is pressed, the status changes. Press the register key to register the lift status, then the lift indicative symbol changes from flashing to a solid light.
   - when mounting and stowing jib, select the jib set status.
     (the jib state indicative symbol will be flashing.)
2. When operating crane on rubber:
   - Set P.T.O. switch to "ON".
   - Press the outrigger mode select key. The on-tire mode indicative symbol comes on. Each time the outrigger mode select key is pressed the status changes. Select the creep operation, the on-tire mode indicative symbol flicker.
   - Press the lift mode select key to register the boom or single top lift.

   However, pay attention to the following.

   (1) For stationary operation.
   - The front capacities are attainable only when the over front position symbol comes on. When the boom is more than 2 degrees from centered over front of chassis, 360° capacities are in effect.
   - When a load is lifted in the front position and then swung to the side area, make sure the value of the LOAD MOMENT INDICATOR(AML-C) is below the 360° lifting capacity.

   (2) For creep operation.
   - The creep capacities are attainable only when boom is in the straight forward position of chassis and the over front position symbol is on. If boom is not in the straight forward position of chassis , never lift load.
3. A slewing does not automatically stop even if the crane becomes overloaded.
4. During crane operation, make sure that the displays on front panel are in accordance with actual operating conditions.
5. The displayed values of LOAD MOMENT INDICATOR (AML-C) are based on freely suspended loads and make no allowance for such factors as the effect of wind, sudden stopping of loads, supporting surface conditions, inflation of tire, operating speed, side loads, etc.
   For safe operation, it is recommended when extending and lowering boom or slewing, lifting loads shall be appropriately reduced.
6. LOAD MOMENT INDICATOR (AML-C) is intended as an aid to the operator. Under no condition should it be relied upon to replace use of capacity charts and operating instruction. Sole reliance upon LOAD MOMENT INDICATOR (AML-C) aids in place of good operating practice can cause an accident. The operator must exercise caution to assure safety.

GR-750XL Axle weight distribution chart

		Pounds			Kilograms		
		GVW	Front	Rear	GVW	Front	Rear
Base machine		97,920	50,180	47,740	44,416	22,762	21,654
	1. 6.2ton (5.6metric ton) hook ball	-330	-470	140	-150	-214	64
	2. 75ton (68metric ton) hook block (1,600lbs)	-1,600	-2,840	1,240	-726	-1,290	564
	3. Top jib	-740	-805	65	-336	-365	29
Remove:	4. Base jib	-1,910	-3,270	1,360	-867	-1,483	616
	5. Auxiliary lifting sheave	-110	-300	190	-50	-137	87
	6. Counterweight (with Auxiliary hoist & wire rope)	-12,500	5,510	-18,010	-5,670	2,498	-8,168

TADANO AMERICA CORPORATION
4242 West Greens Road
Houston, Texas, 77066 U.S.A.
PHONE: (281) 869-0030
FAX: (281) 869-0040
http://www.tadanoamerica.com

Form No. TAC-GR-750-3-00311-09022014

GR-750XL RATED LIFTING CAPACITIES (IN POUNDS)

ON OUTRIGGERS FULLY EXTENDED 23' 11-3/8"(7.3m) SPREAD
360° ROTATION

A / B	36.1'		49.2'		62.3' (19m)				75.5' (23m)				88.6' (27m)				101.7' (31m)				114.8' (35m)				128.0'		141.1'	
	C	(11m)	C	(15m)	C		C		C		C		C		C		C		C		C		C		C	(39m)	C	(43m)
8'	72	150,000	77	90,000																								
10'	68	132,300	75	90,000	79	70,500	78	44,100																				
12'	64	117,100	72	90,000	77	70,500	76	44,100	79	44,100	79	44,100																
15'	59	98,000	68	90,000	73	70,500	73	44,100	77	44,100	77	44,100	79	44,100	79	37,500												
20'	48	75,600	62	75,100	69	69,600	69	44,100	73	44,100	73	44,100	76	42,400	76	37,100	78	36,600	78	31,700								
25'	33	60,000	54	59,400	64	59,100	63	44,100	69	44,100	69	43,300	73	39,100	73	32,600	76	32,400	76	28,100	78	28,500	78	24,600	79	22,000		
30'			46	45,900	59	45,000	58	44,100	65	44,100	65	37,200	70	38,800	69	29,500	73	31,500	73	25,200	75	26,300	75	22,200	77	22,000	79	19,800
35'			36	33,900	52	32,900	52	38,300	60	34,600	60	32,400	66	34,700	66	25,900	70	30,600	70	23,500	73	25,600	73	20,100	75	20,300	77	18,500
40'			21	26,100	45	25,300	45	30,200	55	26,800	55	28,500	62	27,700	62	23,100	67	27,700	67	20,900	70	24,900	70	18,700	73	18,700	75	17,200
45'					38	19,900	38	24,600	50	21,300	50	24,800	58	22,200	58	20,900	63	22,800	63	18,800	68	22,700	67	17,400	70	17,700	74	16,900
50'					29	15,900	28	20,500	45	17,300	45	20,700	54	18,100	54	19,000	60	18,700	60	17,100	65	19,100	64	15,600	68	17,100	71	16,500
55'					13	11,100	11	14,000	38	14,200	38	17,500	49	15,000	49	17,400	56	15,500	56	15,500	62	16,000	62	14,000	66	15,600	69	16,100
60'									31	11,700	31	15,000	45	12,500	45	15,200	53	13,100	53	14,000	58	13,400	58	12,700	63	14,200	67	13,900
65'									22	9,700	22	13,000	40	10,500	40	13,200	49	11,000	49	12,800	55	11,400	55	11,600	60	12,500	65	11,900
70'													34	8,900	34	11,500	45	9,400	45	11,600	52	9,800	52	10,600	57	10,900	62	10,300
75'													26	7,500	26	10,100	40	8,000	40	10,300	48	8,400	48	9,700	54	9,500	59	8,800
80'													15	6,300	18	9,000	35	6,800	35	9,100	44	7,200	45	9,000	51	8,300	57	7,700
85'																	29	5,800	29	8,000	40	6,200	41	8,100	48	7,200	54	6,600
90'																	21	5,000	21	7,200	36	5,300	36	7,200	45	6,300	51	5,700
95'																					31	4,500	31	6,400	41	5,600	48	4,900
100'																					25	3,900	25	5,800	37	4,900	45	4,300
105'																					16	3,300	16	5,200	33	4,300	42	3,700
110'																									27	3,800	38	3,100
115'																									21	3,300	34	2,600
120'																									8	2,900	30	2,200
125'																											24	1,800
130'																											17	1,500
D	0																											
Telescoping conditions (%)																												
Tele. mode	I, II		I		I		II		I		II		I		II		I		II		I		II		II		I, II	
2nd boom	0		50		100		0		100		0		100		0		100		0		100		0		50		100	
3rd boom	0		0		0		33		16		50		33		66		50		83		66		100		100		100	
4th boom	0		0		0		33		16		50		33		66		50		83		66		100		100		100	
Top boom	0		0		0		33		16		50		33		66		50		83		66		100		100		100	

LIFTING CAPACITIES AT ZERO DEGREE BOOM ANGLE ON OUTRIGGERS FULLY EXTENDED
23' 11-3/8"(7.3m) SPREAD 360° ROTATION

A / C	36.1'		49.2'		62.3' (19m)				75.5' (23m)				88.6' (27m)				101.7' (31m)				114.8' (35m)				128.0'		141.1'	
	B	(11m)	B	(15m)	B		B		B		B		B		B		B		B		B		B		B	(39m)	B	(43m)
0	28.9'	26,000	42.0'	16,800	55.4'	10,800	55.4'	13,700	68.6'	7,900	68.6'	10,100	81.7'	6,000	81.7'	8,400	94.2'	4,400	94.5'	6,600	107.0'	3,100	107.0'	4,600	119.8'	2,900	132.5'	1,100
Tele. mode	I, II		I		I		II		I		II		I		II		I		II		I		II		II		I, II	

A :Boom length in feet
B :Load radius in feet
C :Loaded boom angle (°)
D :Minimum boom angle (°) for indicated length (no load)

NOTE: The lifting capacity data stored in the LOAD MOMENT INDICATOR (AML-C) is based on the standard number of parts of line listed in the chart.
Standard number of parts of line for each boom length should be according to the following table.

Boom length in feet (meters)	36.1' (11m)	36.1' to 49.2' (11m to 15m)	49.2' to 62.3' (15m to 19m)		62.3' to 141.1' (19m to 43m)	Single top Jib
Telescoping mode	I, II	I	I	II	I, II	I, II
Number of parts of line	14	8	6	4	4	1

The Crosby Group, Inc.

Forged Shackles

SCREW PIN

G-209 S-209

Screw pin anchor shackles meet the performance requirements of Federal Specification RR-C-271D Type IVA, Grade A, Class 2, except for those provisions required of the contractor.

ROUND PIN

G-213 S-213

Round pin anchor shackles meet the performance requirements of Federal Specification RR-C-271D Type IVA, Grade A, Class 1, except for those provisions required of the contractor.

209

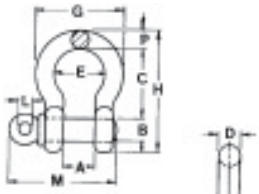

213

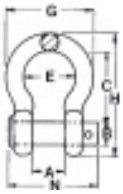

- Working Load Limit permanently shown on every shackle
- Forged — Quenched and Tempered, with alloy pins.
- Shackles can be furnished proof tested with certificates to designated standards, such as ABS, DNV, Lloyds, or other certification. Charges for proof testing and certification available when requested at the time of order.
- Hot Dip galvanized or Self Colored.

Nominal Size (in.)	Working Load Limit* (tons)	G-209 Galv.		S-209 S.C.		G-213 Galv.		S-213 S.C.		Weight Each (lbs.)	
		CERTEX Cat. Ref. No.	Crosby Stock No.	CERTEX Cat. Ref. No.	Crosby Stock No.	CERTEX Cat. Ref. No.	Crosby Stock No.	CERTEX Cat. Ref. No.	Crosby Stock No.	G-209 S-209	G-213 S-213
3/16	† 1/3	CX10-0001	1018357		—		—		—	.06	—
1/4	1/2	CX10-0002	1018375	CX10-0018	1018384	CX10-0034	1018017	CX10-0049	1018026	.10	.13
5/16	3/4	CX10-0003	1018393	CX10-0019	1018400	CX10-0035	1018035	CX10-0050	1018044	.19	.18
3/8	1	CX10-0004	1018419	CX10-0020	1018428	CX10-0036	1018053	CX10-0051	1018062	.31	.29
7/16	1 1/2	CX10-0005	1018437	CX10-0021	1018446	CX10-0037	1018071	CX10-0052	1018080	.38	.38
1/2	2	CX10-0006	1018455	CX10-0022	1018464	CX10-0038	1018099	CX10-0053	1018106	.72	.71
5/8	3 1/4	CX10-0007	1018473	CX10-0023	1018482	CX10-0039	1018115	CX10-0054	1018124	1.37	1.50
3/4	4 3/4	CX10-0008	1018491	CX10-0024	1018507	CX10-0040	1018133	CX10-0055	1018142	2.35	2.32
7/8	6 1/2	CX10-0009	1018516	CX10-0025	1018525	CX10-0041	1018151	CX10-0056	1018160	3.62	3.49
1	8 1/2	CX10-0010	1018534	CX10-0026	1018543	CX10-0042	1018179	CX10-0057	1018188	5.03	5.00
1 1/8	9 1/2	CX10-0011	1018552	CX10-0027	1018561	CX10-0043	1018197	CX10-0058	1018204	7.41	6.97
1 1/4	12	CX10-0012	1018570	CX10-0028	1018589	CX10-0044	1018213	CX10-0059	1018222	9.50	9.75
1 3/8	13 1/2	CX10-0013	1018598	CX10-0029	1018605	CX10-0045	1018231	CX10-0060	1018240	13.53	13.25
1 1/2	17	CX10-0014	1018614	CX10-0030	1018623	CX10-0046	1018259	CX10-0061	1018268	17.20	17.25
1 3/4	25	CX10-0015	1018632	CX10-0031	1018641	CX10-0047	1018277	CX10-0062	1018286	27.78	29.46
2	35	CX10-0016	1018650	CX10-0032	1018669	CX10-0048	1018295	CX10-0063	1018302	45.00	45.75
2 1/2	†55	CX10-0017	1018678	CX10-0033	1018687		—		—	85.75	—

† Furnished in screw pin only.
* NOTE: Maximum Proof Load is 2.2 times the Working Load Limit. Minimum Ultimate Strength is 6 times the Working Load Limit. For Working Load Limit reduction due to side loading applications, see beginning of chapter.

Nominal Size (in.)	Working Load Limit* (tons)	Dimensions (in.)												Tolerance	
		A	B	C	D	E	F	G	H	L	M	N	P	C	A
3/16	† 1/3	.38	.25	.88	.19	.60	.56	.98	1.47	.16	1.12	—	.19	.06	.06
1/4	1/2	.47	.31	1.13	.25	.78	.61	1.28	1.84	.19	1.38	1.34	.25	.06	.06
5/16	3/4	.53	.38	1.22	.31	.84	.75	1.47	2.09	.22	1.66	1.59	.31	.06	.06
3/8	1	.66	.44	1.44	.38	1.03	.91	1.78	2.49	.25	2.03	1.86	.38	.13	.06
7/16	1 1/2	.75	.50	1.69	.44	1.16	1.06	2.03	2.91	.31	2.38	2.13	.44	.13	.06
1/2	2	.81	.63	1.88	.50	1.31	1.19	2.31	3.28	.38	2.69	2.38	.50	.13	.06
5/8	3 1/4	1.06	.75	2.38	.63	1.69	1.50	2.94	4.19	.44	3.34	2.91	.69	.13	.06
3/4	4 3/4	1.25	.88	2.81	.75	2.00	1.81	3.50	4.97	.50	3.97	3.44	.81	.25	.06
7/8	6 1/2	1.44	1.00	3.31	.88	2.28	2.09	4.03	5.83	.50	4.50	3.81	.97	.25	.06
1	8 1/2	1.69	1.13	3.75	1.00	2.69	2.38	4.69	6.56	.56	5.07	4.53	1.06	.25	.06
1 1/8	9 1/2	1.81	1.25	4.25	1.16	2.91	2.69	5.16	7.47	.63	5.59	5.13	1.25	.25	.06
1 1/4	12	2.03	1.38	4.69	1.29	3.25	3.00	5.75	8.25	.69	6.16	5.50	1.38	.25	.06
1 3/8	13 1/2	2.25	1.50	5.25	1.42	3.63	3.31	6.38	9.16	.75	6.84	6.13	1.50	.25	.13
1 1/2	17	2.38	1.63	5.75	1.54	3.88	3.63	6.88	10.00	.81	7.35	6.50	1.62	.25	.13
1 3/4	25	2.88	2.00	7.00	1.84	5.00	4.19	8.86	12.34	1.00	9.08	7.75	2.25	.25	.13
2	35	3.25	2.25	7.75	2.08	5.75	4.81	9.97	13.68	1.22	10.34	8.75	2.40	.25	.13
2 1/2	†55	4.13	2.75	10.50	2.71	7.25	5.69	12.87	17.84	1.38	13.00	—	3.13	.25	.25

† Furnished in screw pin only.
* NOTE: Maximum Proof Load is 2.2 times the Working Load Limit. Minimum Ultimate Strength is 6 times the Working Load Limit. For Working Load Limit reduction due to side loading applications, see beginning of chapter.

The Crosby Group, Inc.

Warnings and Application Instructions

Regular Nut
Eye Bolt
G-291

Shoulder Nut
Eye Bolt
G-277

Machinery Nut
Eye Bolt
S-279

Table 1 (In-Line Load)	
Size (in.)	Working Load Limit (lbs.)
1/4	650
5/16	1200
3/8	1550
1/2	2600
5/8	5200
3/4	7200
7/8	10600
1	13300
1 1/4	21000
1 1/2	24000

IMPORTANT SAFETY INFORMATION — READ & FOLLOW

Inspection/Maintenance Safety:

- Always inspect eye bolt before use.
- Never use eye bolt that shows signs of wear or damage.
- Never use eye bolt if eye or shank is bent or elongated.
- Always be sure threads on shank and receiving holes are clean.
- Never machine, grind, or cut eye bolt.

Assembly Safety:

- Never exceed load limits specified in Table I.
- Never use regular nut eye bolts for angular lifts.
- Always use shoulder nut eye bolts (or machinery eye bolts) for angular lifts.
- For angular lifts, adjust working load as follows:

Direction of Pull	Adjusted Working Load
45 degrees	30% of rated working load
90 degrees	25% of rated working load

- Never undercut eye bolt to seat shoulder against the load.
- Always countersink receiving hole or use washers to seat shoulder.
- Always screw eye bolt down completely for proper seating.
- Always tighten nuts securely against the load.

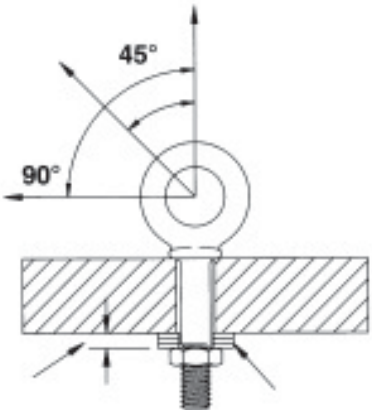

IN - LINE

Shoulder Nut Eye Bolt — Installation for Angular Loading

- The threaded shank must protrude through the load sufficiently to allow full engagement of the nut.
- If the eye bolt protrudes so far through the load that the nut cannot be tightened securely against the load, use properly sized washer to take up the excess space BETWEEN THE NUT AND THE LOAD.
- Place washers or spacers between nut and load so that when the nut is tightened securely, the shoulder is secured flush against the load surface.
- Thickness of spacers must exceed this distance between the bottom of the load and the last thread of the eye bolt.

WARNING

- Loads may slip or fall if proper eye bolt assembly and lifting procedures are not used.
- A falling load can serious injury or kill.
- Read and understand both sides of these instructions, and follow all eye bolt safety information presented here.
- Read, understand and follow all information in diagrams and charts below before using eye bolt assemblies.

WIRE ROPE SLINGS

1-PART SLINGS/MECHANICAL SPLICE

Single Leg Slings

EXTRA IMPROVED PLOW STEEL IWRC
RATED CAPACITY IN TONS

CERTEX Cat. Ref. No.	ROPE DIAMETER (INCHES)	VERTICAL	CHOKER	BASKET AT DEGREES			
				VERTICAL BASKET	30 DEGREE	45 DEGREE	60 DEGREE
CX02-0001	1/4	0.65	0.48	1.3	0.65	0.91	1.1
CX02-0002	5/16	1.0	0.74	2.0	1.0	1.4	1.7
CX02-0003	3/8	1.4	1.1	2.9	1.4	2.0	2.5
CX02-0004	7/16	1.9	1.4	3.9	1.9	2.7	3.4
CX02-0005	1/2	2.5	1.9	5.1	2.5	3.6	4.4
CX02-0006	9/16	3.2	2.4	6.4	3.2	4.5	5.5
CX02-0007	5/8	3.9	2.9	7.8	3.9	5.5	6.8
CX02-0008	3/4	5.6	4.1	11	5.6	7.9	9.7
CX02-0009	7/8	7.6	5.6	15	7.6	11	13
CX02-0010	1	9.8	7.2	20	9.8	14	17
CX02-0011	1 1/8	12	9.1	24	12	17	21
CX02-0012	1 1/4	15	11	30	15	21	26
CX02-0013	1 3/8	18	13	36	18	25	31
CX02-0014	1 1/2	21	16	42	21	30	37
CX02-0015	1 5/8	24	18	49	24	35	42
CX02-0016	1 3/4	28	21	57	28	40	49
CX02-0017	1 7/8	32	24	64	32	46	56
CX02-0018	2	37	28	73	37	52	63
CX02-0019	2 1/8	40	31	80	40	56	69
CX02-0020	2 1/4	44	35	89	44	63	77
CX02-0021	2 3/8	49	38	99	49	70	85
CX02-0022	2 1/2	54	42	109	54	77	94
CX02-0023	2 5/8	60	46	119	60	84	103
CX02-0024	2 3/4	65	51	130	65	92	113
CX02-0025	2 7/8	71	55	141	71	100	122
CX02-0026	3	77	60	153	77	108	132
CX02-0027	3 1/8	82	64	165	82	117	143
CX02-0028	3 1/4	89	69	177	89	125	153
CX02-0029	3 3/8	95	74	190	95	135	165
CX02-0030	3 1/2	102	79	203	102	144	176
CX02-0031	4	130	101	260	130	183	224
CX02-0032	4 1/2	160	124	320	160	225	276

RATED CAPACITIES BASKET HITCH BASED ON D/d RATIO OF 25
RATED CAPACITIES BASED ON PIN DIAMETER NO LARGER THAN NATURAL EYE WIDTH OR LESS THAN THE NOMINAL SLING DIAMETER
RATED CAPACITIES BASED ON DESIGN FACTOR OF 5
HORIZONTAL SLING ANGLES LESS THAN 30 DEGREES SHALL NOT BE USED
Rated Capacities shown apply only to 6x19 and 6x37 classification wire rope.

CERTEX

1-PART SLINGS/MECHANICAL SPLICE

4-Leg Bridle Slings

EXTRA IMPROVED PLOW STEEL IWRC
RATED CAPACITY IN TONS

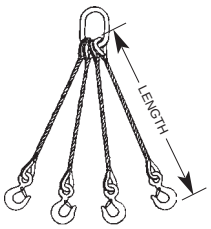

Standard Style

CERTEX Cat. Ref. No.	ROPE DIAMETER (INCHES)	4 LEG BRIDLE			
		VERTICAL	30°	45°	60°
CX02-0069	1/4	2.6	1.3	1.8	2.2
CX02-0070	5/16	4.0	2.0	2.8	3.5
CX02-0071	3/8	5.7	2.9	4.1	5.0
CX02-0072	7/16	7.8	3.9	5.5	6.7
CX02-0073	1/2	10	5.1	7.1	8.8
CX02-0074	9/16	13	6.4	9.0	11
CX02-0075	5/8	16	7.8	11	14
CX02-0076	3/4	22	11	16	19
CX02-0077	7/8	30	15	21	26
CX02-0078	1	39	20	28	34
CX02-0079	1 1/8	48	24	34	42
CX02-0080	1 1/4	59	30	42	51
CX02-0081	1 3/8	71	36	50	62
CX02-0082	1 1/2	84	42	60	73
CX02-0083	1 5/8	98	49	69	85
CX02-0084	1 3/4	113	57	80	98
CX02-0085	1 7/8	129	64	91	112
CX02-0086	2	147	73	104	127
CX02-0850	2 1/8	159	80	112	138
CX02-0851	2 1/4	178	89	126	154
CX02-0852	2 3/8	197	99	139	171
CX02-0853	2 1/2	217	109	154	188
CX02-0854	2 5/8	238	119	168	206
CX02-0855	2 3/4	260	130	184	225
CX02-0856	2 7/8	282	141	200	244
CX02-0857	3	306	153	216	265
CX02-0858	3 1/8	330	165	233	286
CX02-0859	3 1/4	354	177	250	307
CX02-0860	3 3/8	381	190	269	330
CX02-0861	3 1/2	406	203	287	352

RATED CAPACITIES BASKET HITCH BASED ON D/d RATIO OF 25
RATED CAPACITIES BASED ON PIN DIAMETER NO LARGER THAN NATURAL EYE WIDTH OR LESS THAN THE NOMINAL SLING DIAMETER
RATED CAPACITIES BASED ON DESIGN FACTOR OF 5
HORIZONTAL SLING ANGLES LESS THAN 30 DEGREES SHALL NOT BE USED
Rated Capacities shown apply only to 6x19 and 6x37 classification wire rope.

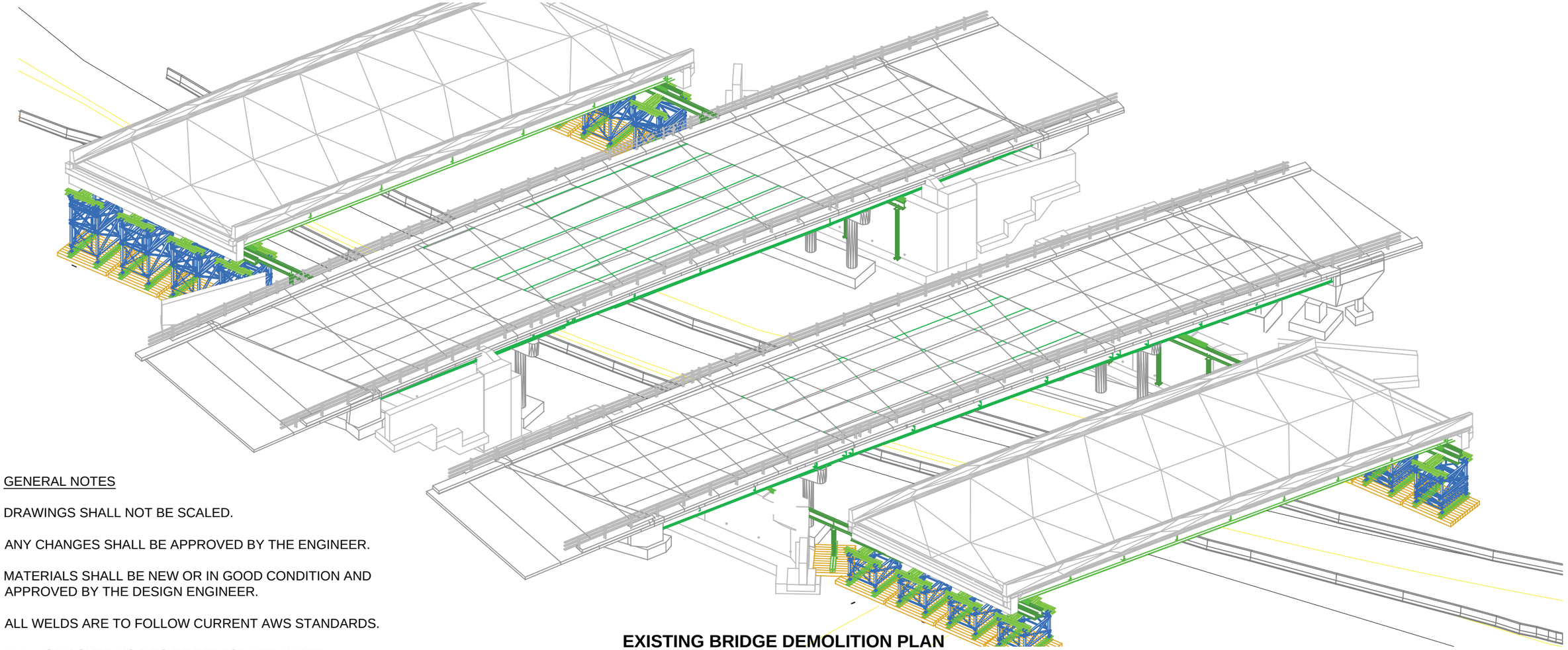

EXISTING BRIDGE DEMOLITION PLAN

GENERAL NOTES

DRAWINGS SHALL NOT BE SCALED.

ANY CHANGES SHALL BE APPROVED BY THE ENGINEER.

MATERIALS SHALL BE NEW OR IN GOOD CONDITION AND APPROVED BY THE DESIGN ENGINEER.

ALL WELDS ARE TO FOLLOW CURRENT AWS STANDARDS.

ALL WORK OVER US-5 TO BE PERFORMED UNDER FLAGGING OPERATIONS PER THE TRAFFIC CONTROL PLAN.

DEMOLITION SEQUENCE BASED ON REMOVAL OF SUSPENDED SPAN AND END SPAN DECK PRIOR TO END SPAN STEEL REMOVAL. ALTERNATE SEQUENCE REQUIRING THE USE OF TEMPORARY TIEDOWNS SHOWN WITHIN TO BE PERFORMED UNDER THE DIRECTION OF THE CONSTRUCTION ENGINEER, ONLY AS REQUIRED.

CRANE CONFIGURATIONS ARE AS FOLLOWS:

- ALL RT CRANES ON 100% OUTRIGGER EXTENSION
- LINK-BELT LS-248H I ABC+A COUNTERWEIGHT
- LINK BELT 298 HSL ABC+A COUNTERWEIGHT

DESIGN AIDS

- ASD NINTH ED. (STEEL)
- AASHTO GUIDE DESIGN SPECIFICATIONS FOR BRIDGE TEMPORARY WORKS

MATERIAL PROPERTIES

STEEL

- PLATE, MISC.
  - ASTM A36 Fy = 36 ksi MIN
- CHANNEL

ASTM A529, Gr. 50 Fy = 50 ksi MIN

- PT ROD
  - Fy = 150 ksi MIN

LIST OF DRAWINGS

TITLE SHEET ____ 01
SAWCUT LAYOUTS ____ 02
RIGGING DETAILS ____ 06
TIEDOWN DETAILS ____ 09
PIER CAP DEMO DETAIL ____ 12
NB SEQUENCE ____ 13
SB SEQUENCE ____ 22

Revision No. & Date	Vermont Agency of Transportation			Engineer's Seal	Drawing Status		Name	Date	PCL Civil Constructors, Inc. 3810 Northdale Blvd. Suite 200, Tampa Florida 33624 (813)-264-9500 ; Fax: (813)-264-6689	
				STATE OF VERMONT TIMOTHY DAVIS NO. 97183 CIVIL LICENSED PROFESSIONAL ENGINEER	Tim Davis, P.E. Jul 30 2015 12:56 PM FOR CONSTRUCTION	Drawn By	AJT	06/03/15		
	Road No.	County / City	Financial Project ID No.			Design By	TMD/ AJT	06/03/15	Submittal DEMOLITION PLAN	PCL Project / Job No. I-91 Windsor / Hartford / 5514001
	I-91	Windsor / Hartford	IM 091-2(79)			Check By	TMD	06/30/15	Drawing Title DEMOLITION TITLE SHEET	Sheet No. 01

H:\District Office\Engineering\01 TIG Tampa Active Projects\5514001 – I-91 Hartford\70 Other\71 Demolition\01 CAD Files\Demo_Plan_P.dwg 7/30/2015 9:08 AM

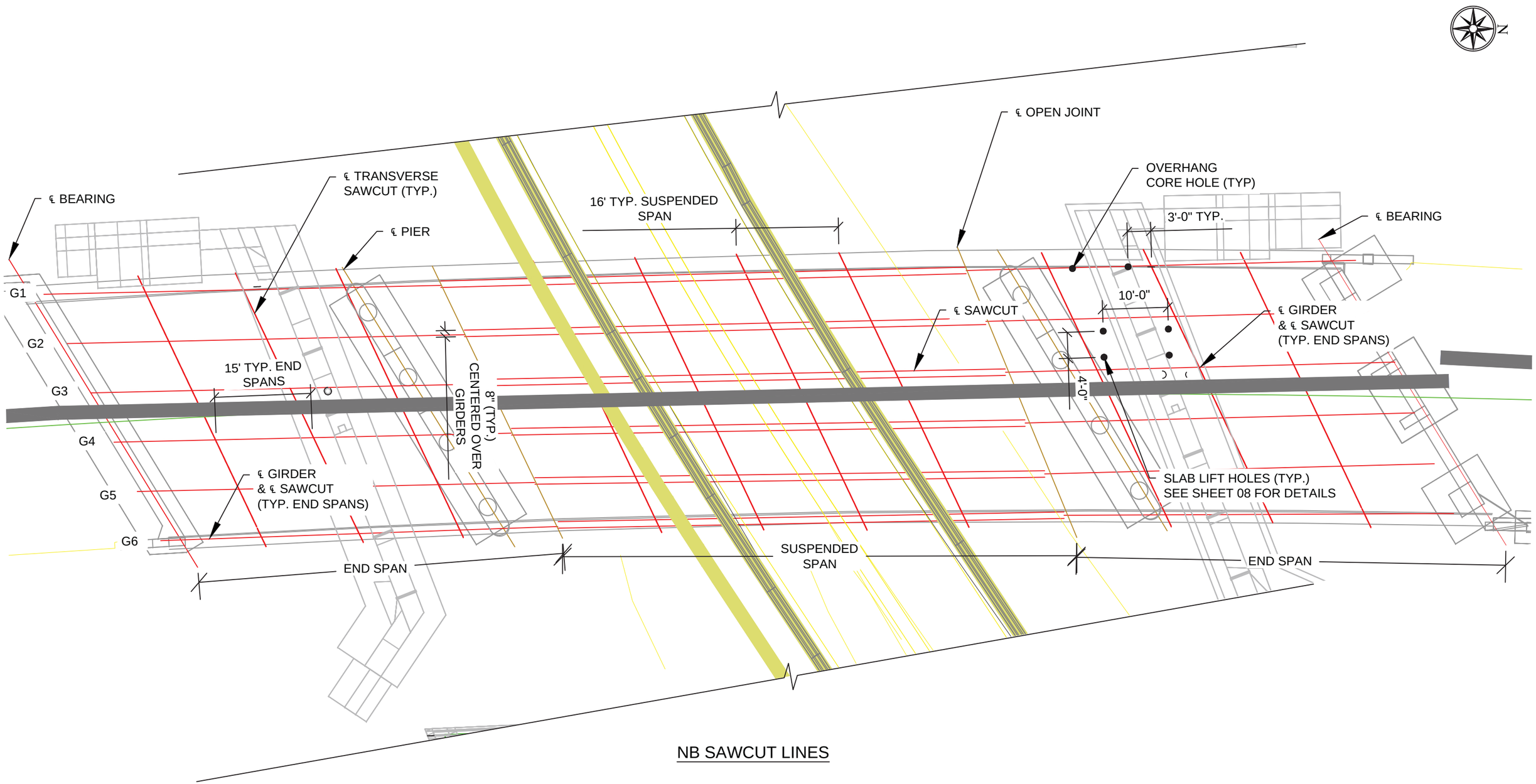

NB SAWCUT LINES

Revision No. & Date	Vermont Agency of Transportation			Engineer's Seal	Drawing Status		Name	Date	PCL Civil Constructors, Inc. 3810 Northdale Blvd. Suite 200, Tampa Florida 33624 (813)-264-9500 ; Fax: (813)-264-6689	
				STATE OF VERMONT TIMOTHY DAVIS NO. 97183 CIVIL LICENSED PROFESSIONAL ENGINEER	Jul 30 2015 12:44 PM FOR CONSTRUCTION	Drawn By	AJT	06/03/15		
	Road No.	County / City	Financial Project ID No.			Design By	TMD/ AJT	06/03/15	Submittal DEMOLITION PLAN	PCL Project / Job No. I-91 Windsor / Hartford / 5514001
	I-91	Windsor / Windsor / Hartford	IM 091-2(79)			Check By	TMD	06/30/15	Drawing Title NORTHBOUND SAWCUT LAYOUT	Sheet No. 02

H:\District Office\Engineering\01 TIG Tampa Active Projects\5514001 - I-91 Hartford\70 Other\71 Demolition\01 CAD Files\Demo_Plan_P.dwg 7/30/2015 8:09 AM

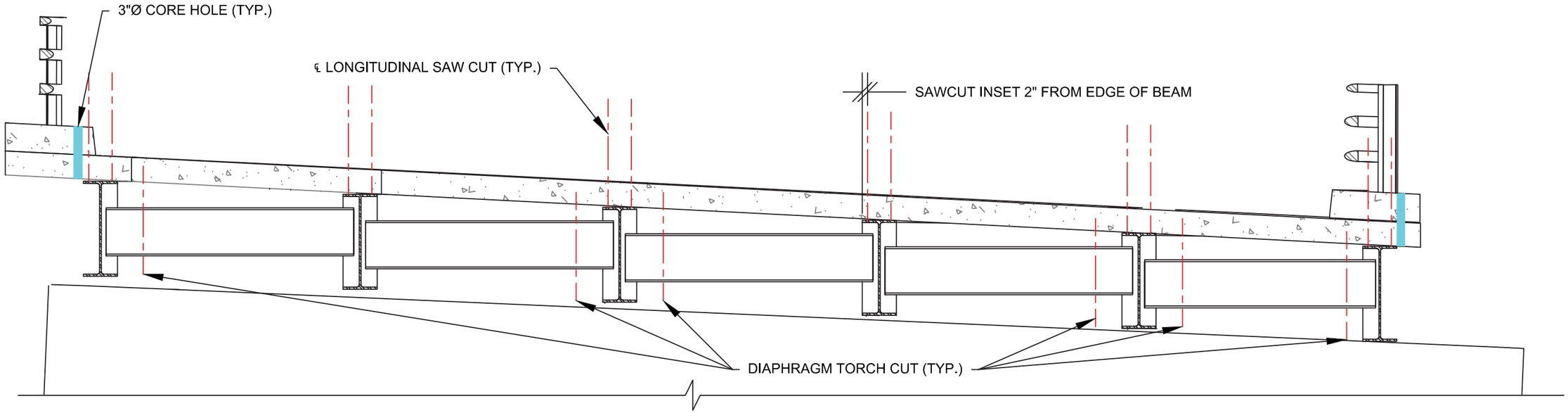

NB SAWCUT LINES - SUSPENDED SPAN
TYPICAL SECTION

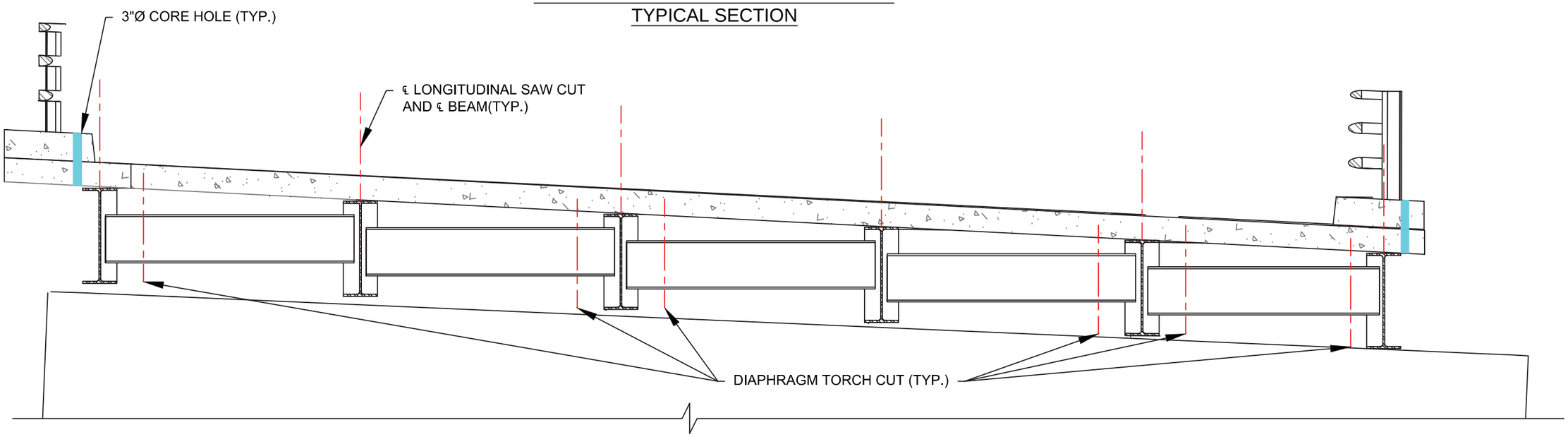

NB SAWCUT LINES - END SPAN TYPICAL
SECTION

NOTE: BOLTS MAY BE REMOVED IN LIEU
OF TORCHCUTS AT DIAPHRAGMS

Revision No. & Date	Vermont Agency of Transportation			Engineer's Seal	Drawing Status		Name	Date	PCL Civil Constructors, Inc. 3810 Northdale Blvd. Suite 200, Tampa Florida 33624 (813)-264-9500 ; Fax: (813)-264-6689	
				STATE OF VERMONT TIMOTHY DAVIS NO. 97183 CIVIL LICENSED PROFESSIONAL ENGINEER	Jul 30 2015 12:44 PM FOR CONSTRUCTION	Drawn By	AJT	06/03/15		
	Road No.	County / City	Financial Project ID No.			Design By	TMD/ AJT	06/03/15	Submittal DEMOLITION PLAN	PCL Project / Job No. I-91 Windsor / Hartford / 5514001
	I-91	Windsor / Windsor / Hartford	IM 091-2(79)			Check By	TMD	06/30/15	Drawing Title NORTHBOUND SAWCUT SECTIONS	Sheet No. 03

H:\District Office\Engineering\01 TRO Tampa Active Projects\5514001 - I-91 Hartford\70 Other\71 Demolition\01 CAD Files\Demo_Plan_P.dwg 7/30/2015 8:10 AM

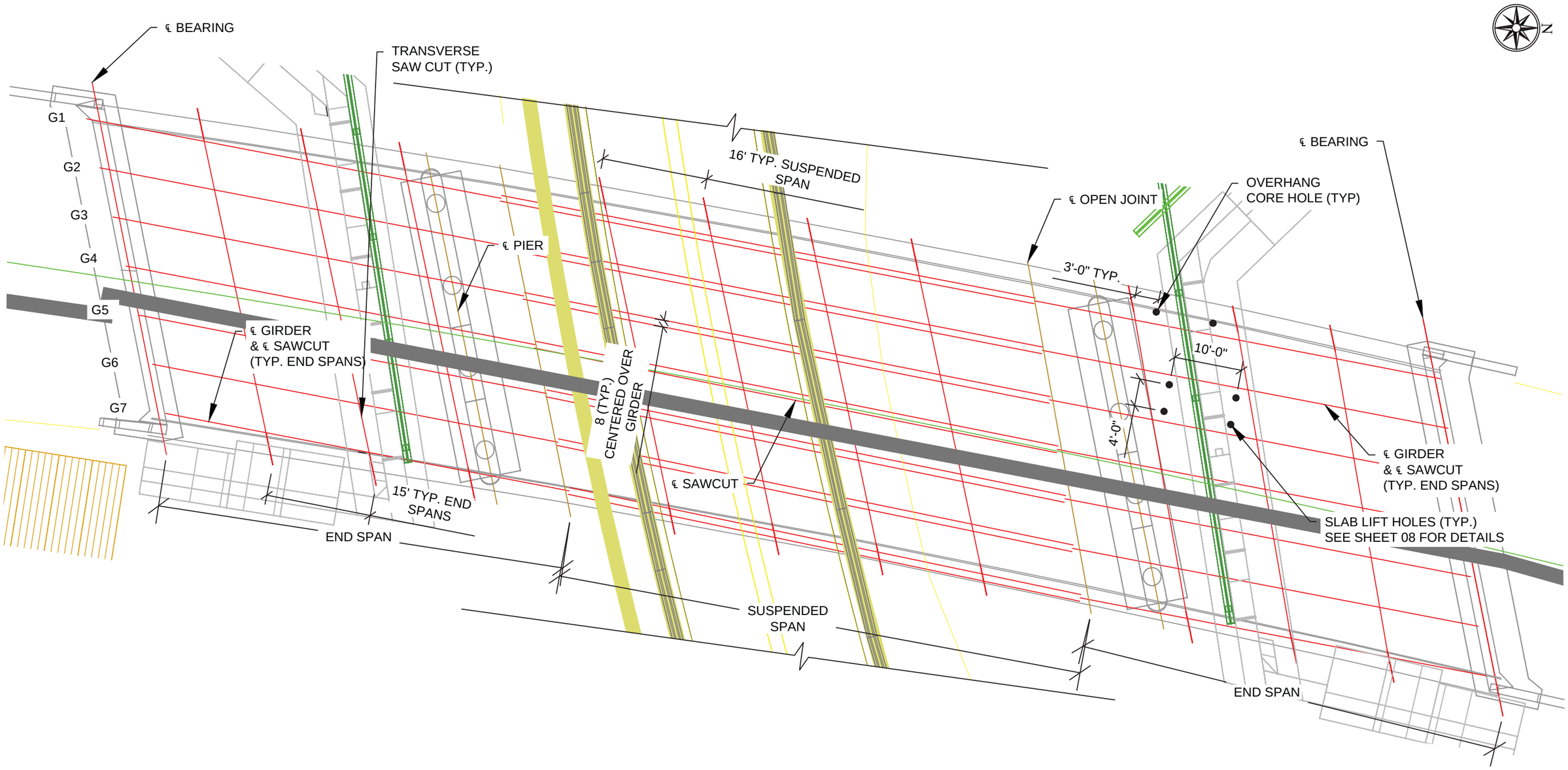

SB SAWCUT LINES

Revision No. & Date	Vermont Agency of Transportation			Engineer's Seal	Drawing Status		Name	Date	PCL Civil Constructors, Inc. 3810 Northdale Blvd. Suite 200, Tampa Florida 33624 (813)-264-9500 ; Fax: (813)-264-6689	
				STATE OF VERMONT TIMOTHY DAVIS NO. 97183 CIVIL LICENSED PROFESSIONAL ENGINEER	Jul 30 2015 12:45 PM FOR CONSTRUCTION	Drawn By	AJT	06/03/15		
	Road No.	County / City	Financial Project ID No.			Design By	TMD/ AJT	06/03/15	Submittal DEMOLITION PLAN	PCL Project / Job No. I-91 Windsor / Hartford / 5514001
	I-91	Windsor / Windsor / Hartford	IM 091-2(79)			Check By	TMD	06/30/15	Drawing Title SOUTHBOUND SAWCUT LAYOUT	Sheet No. 04

H:\District Office\Engineering\01 TIG Tampa Active Projects\5514001 - I-91 Hartford\70 Other\71 Demolition\01 CAD Files\Demo_Plan_P.dwg 7/30/2015 9:11 AM

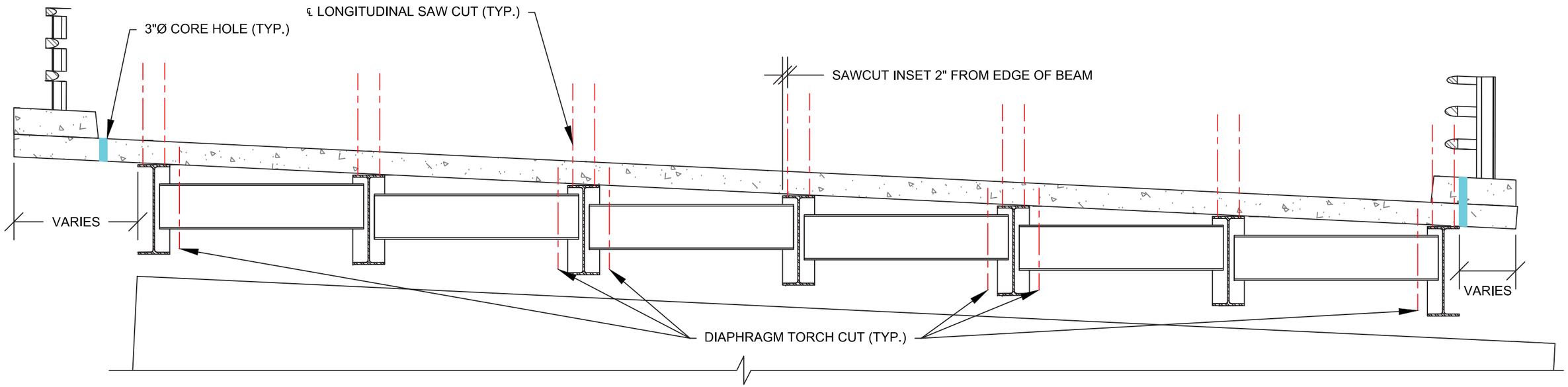

SB SAWCUT LINES - SUSPENDED SPAN
TYPICAL SECTION

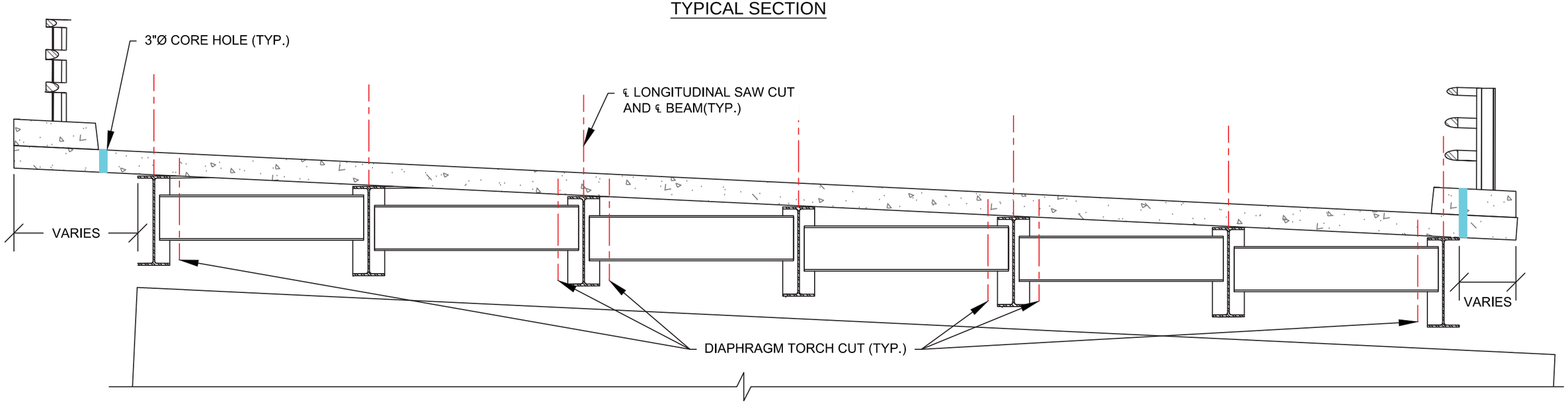

SB SAWCUT LINES - END SPAN TYPICAL
SECTION

NOTE: BOLTS MAY BE REMOVED IN LIEU
OF TORCHCUTS AT DIAPHRAGMS

Revision No. & Date	Vermont Agency of Transportation			Engineer's Seal	Drawing Status		Name	Date	PCL Civil Constructors, Inc. 3810 Northdale Blvd. Suite 200, Tampa Florida 33624 (813)-264-9500 ; Fax: (813)-264-6689	
				STATE OF VERMONT TIMOTHY DAVIS NO. 97183 CIVIL LICENSED PROFESSIONAL ENGINEER	Jul 30 2015 12:45 PM FOR CONSTRUCTION	Drawn By	AJT	06/03/15		
	Road No.	County / City	Financial Project ID No.			Design By	TMD/ AJT	06/03/15	Submittal DEMOLITION PLAN	PCL Project / Job No. I-91 Windsor / Hartford / 5514001
	I-91	Windsor / Windsor / Hartford	IM 091-2(79)			Check By	TMD	06/30/15	Drawing Title SOUTHBOUND SAWCUT SECTIONS	Sheet No. 05

N:\District Office\Engineering\01 TIG Tampa Active Projects\5514001 - I-91 Hartford\09 Other\71 Demolition\01 CAD Files\Demo_Plan_P.dwg 7/30/2015 8:12 AM

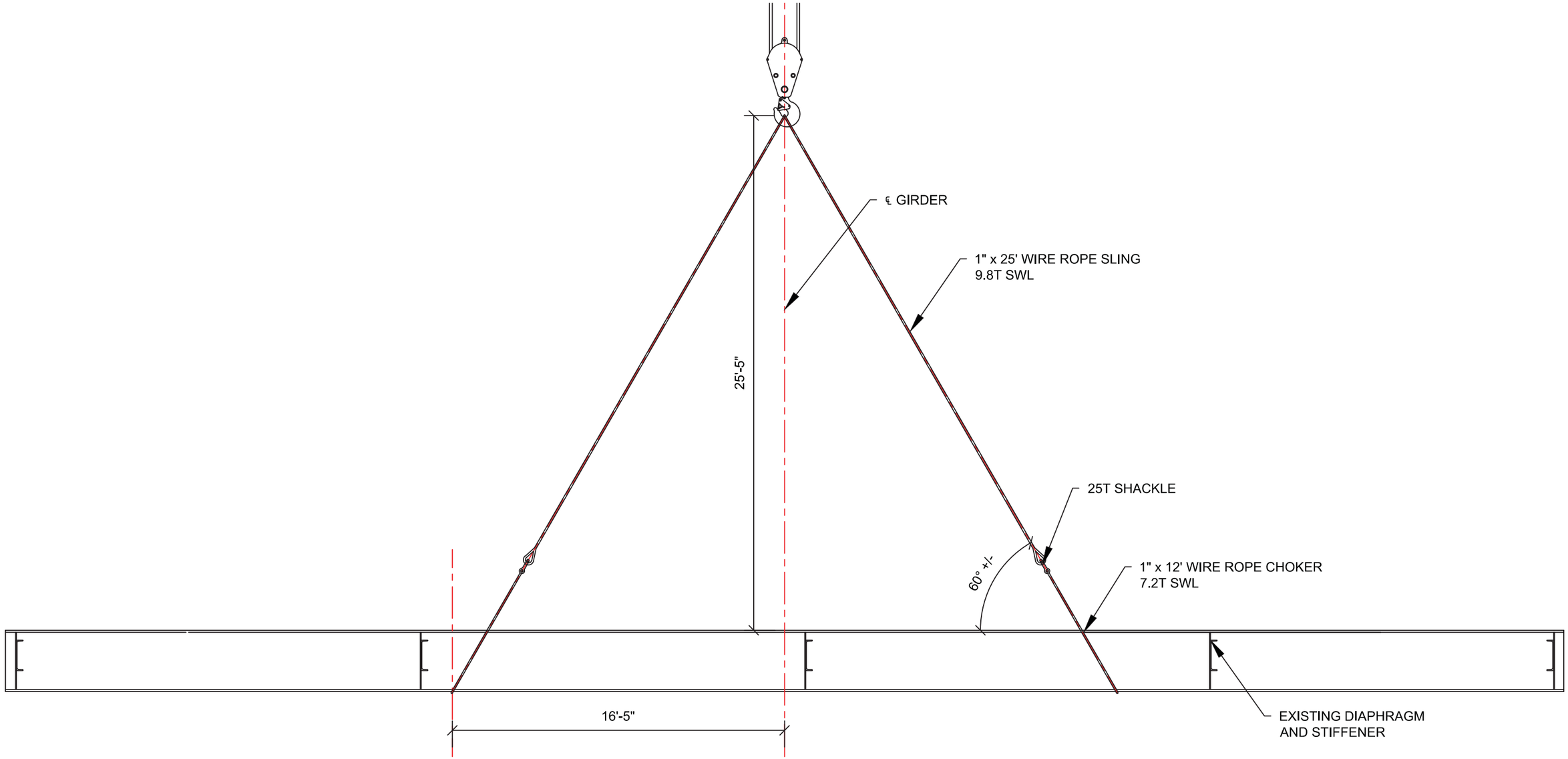

GIRDER DEMOLITION RIGGING - SINGLE
CRANE LIFT

Revision No. & Date	Vermont Agency of Transportation			Drawing Status		Name	Date	PCL Civil Constructors, Inc. 3810 Northdale Blvd. Suite 200, Tampa Florida 33624 (813)-264-9500 ; Fax: (813)-264-6689	
				Jul 30 2015 12:45 PM FOR CONSTRUCTION	Drawn By	AJT	06/03/15		
	Road No.	County / City	Financial Project ID No.		Design By	TMD/ AJT	06/03/15	Submittal DEMOLITION PLAN	PCL Project / Job No. I-91 Windsor / Hartford / 5514001
	I-91	Windsor / Hartford	IM 091-2(79)		Check By	TMD	06/30/15	Drawing Title RIGGING DETAILS (1)	Sheet No. 06

Engineer's Seal
STATE OF VERMONT
TIMOTHY DAVIS
NO. 97183
CIVIL
LICENSED
PROFESSIONAL ENGINEER

N:\District Office\Engineering\01 TIG Tampa Active Projects\5514001 - I-91 Hartford\70 Other\71 Demolition\01 CAD Files\Demo_Plan_P.dwg 7/30/2015 9:12 AM

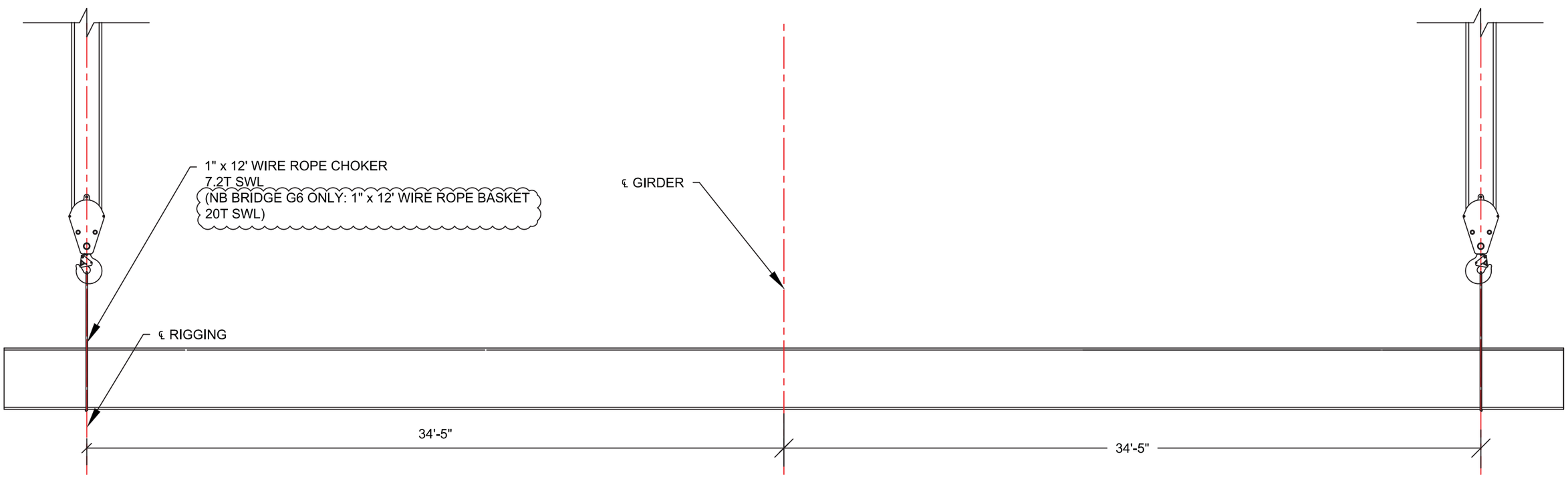

DEMOLITION RIGGING - TWO CRANE LIFT

1

Revision No. & Date	Vermont Agency of Transportation			Drawing Status		Name	Date	PCL Civil Constructors, Inc. 3810 Northdale Blvd. Suite 200, Tampa Florida 33624 (813)-264-9500 ; Fax: (813)-264-6689	
Rev. 1. 7/30/2015				Jul 30 2015 12:45 PM FOR CONSTRUCTION	Drawn By	AJT	06/03/15		
	Road No.	County / City	Financial Project ID No.		Design By	TMD/ AJT	06/03/15	Submittal DEMOLITION PLAN	PCL Project / Job No. I-91 Windsor / Hartford / 5514001
	I-91	Windsor / Hartford	IM 091-2(79)		Check By	TMD	06/30/15	Drawing Title RIGGING DETAILS (2)	Sheet No. 07

Engineer's Seal: STATE OF VERMONT TIMOTHY DAVIS NO. 97183 CIVIL LICENSED PROFESSIONAL ENGINEER

I:\District Office\Engineering\01 TB Tampa Active Projects\5514001 - I-91 Hartford\70 Other\71 Demolition\01 CAD Files\Demo_Plan_P.dwg 7/30/2015 8:13 AM

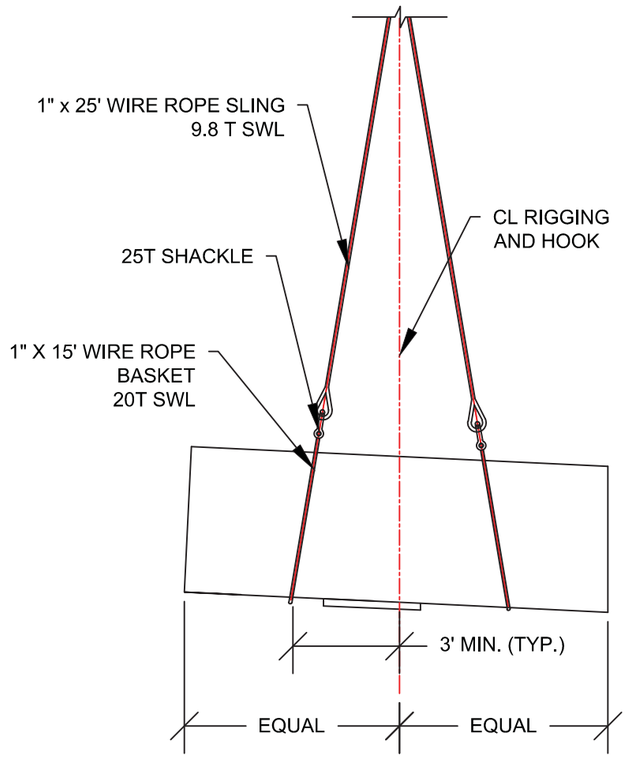

PIER CAP RIGGING

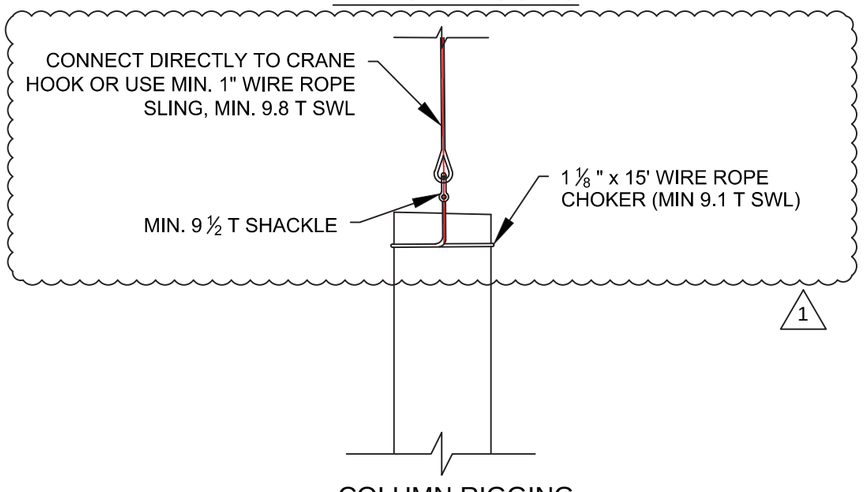

COLUMN RIGGING

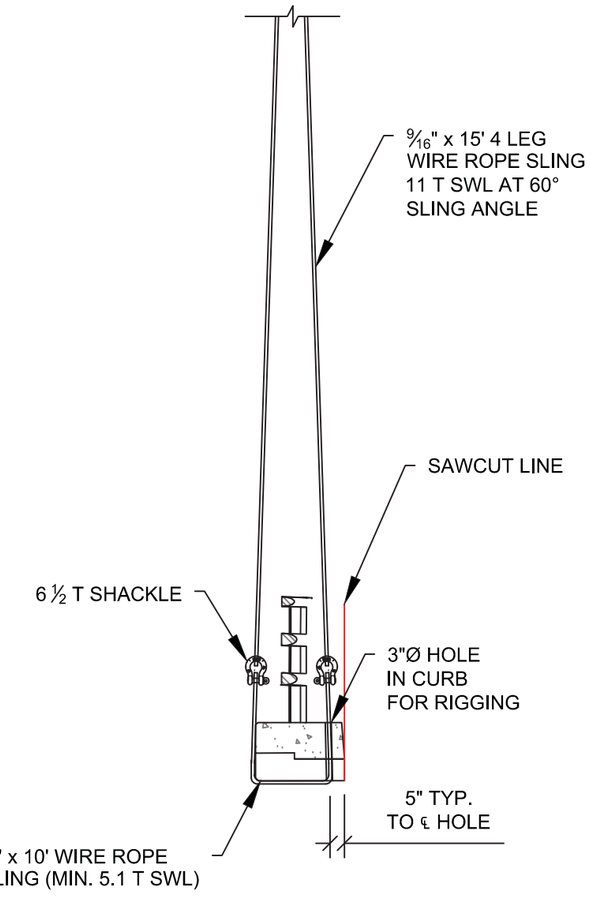

OVERHANG CURB RIGGING

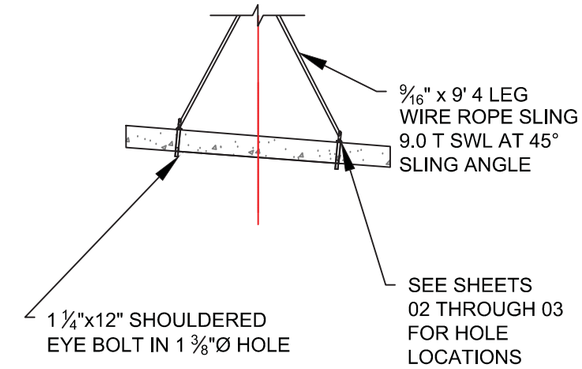

CONCRETE SLAB RIGGING - ELEVATION

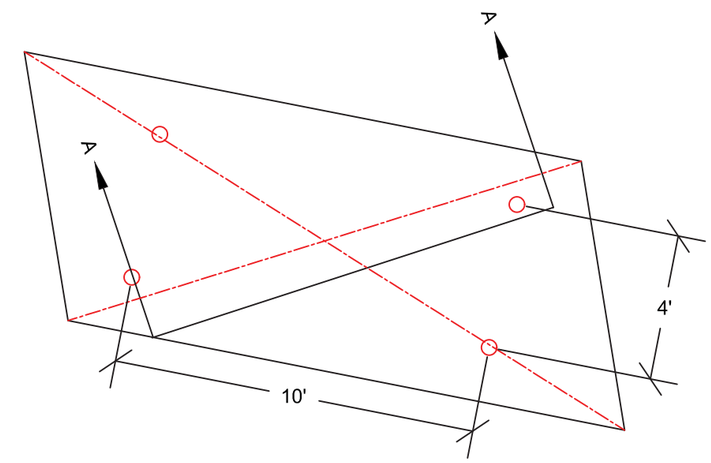

CONCRETE SLAB RIGGING - PLAN

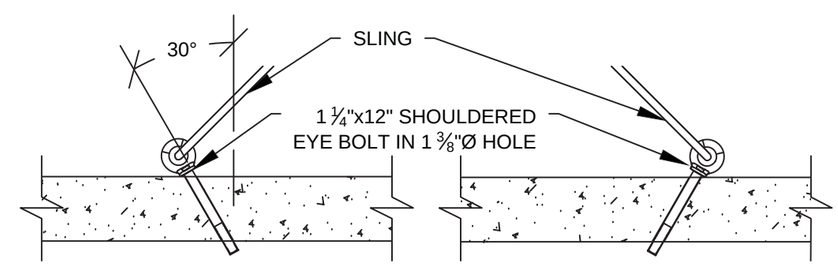

SECTION A-A

Revision No. & Date	Vermont Agency of Transportation			Engineer's Seal	Drawing Status		Name	Date	PCL Civil Constructors, Inc. 3810 Northdale Blvd. Suite 200, Tampa Florida 33624 (813)-264-9500 ; Fax: (813)-264-6689	
Rev. 1. 7/30/2015				STATE OF VERMONT TIMOTHY DAVIS NO. 97183 CIVIL LICENSED PROFESSIONAL ENGINEER	Jul 30 2015 12:47 PM FOR CONSTRUCTION	Drawn By	AJT	06/03/15		
	Road No.	County / City	Financial Project ID No.			Design By	TMD/ AJT	06/03/15	Submittal DEMOLITION PLAN	PCL Project / Job No. I-91 Windsor / Hartford / 5514001
	I-91	Windsor / Hartford	IM 091-2(79)			Check By	TMD	06/30/15	Drawing Title RIGGING DETAILS (3)	Sheet No. 08

N:\District Office\Engineering\01 TIG Tampa Active Projects\5514001 – I-91 Hartford\70 Other\71 Demolition\01 CAD Files\Demo_Plan_P.dwg 7/30/2015 11:32 AM

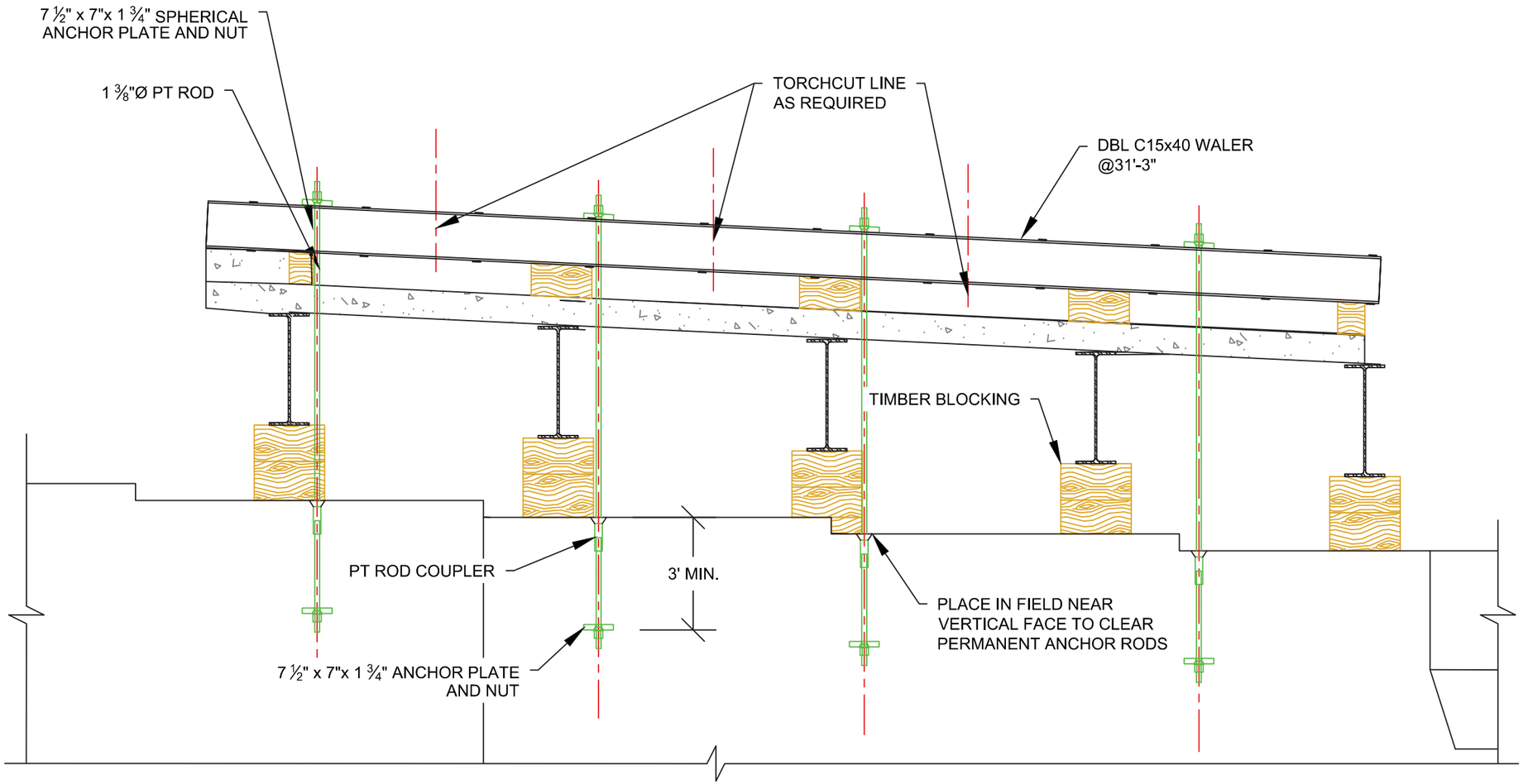

SB TEMPORARY TIEDOWN

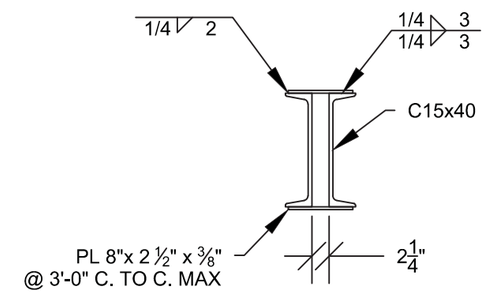

TYPICAL WALER SECTION

Revision No. & Date	Vermont Agency of Transportation			Engineer's Seal	Drawing Status		Name	Date	PCL Civil Constructors, Inc. 3810 Northdale Blvd. Suite 200, Tampa Florida 33624 (813)-264-9500 ; Fax: (813)-264-6689	
				STATE OF VERMONT TIMOTHY DAVIS NO. 97183 CIVIL LICENSED PROFESSIONAL ENGINEER	Jul 30 2015 12:47 PM FOR CONSTRUCTION	Drawn By	AJT	06/03/15		
	Road No.	County / City	Financial Project ID No.			Design By	TMD/ AJT	06/03/15	Submittal DEMOLITION PLAN	PCL Project / Job No. I-91 Windsor / Hartford / 5514001
	I-91	Windsor / Hartford	IM 091-2(79)			Check By	TMD	06/30/15	Drawing Title TIEDOWN DETAILS (1)	Sheet No. 09

N:\District Office\Engineering\01 TIG Tampa Active Projects\5514001 - I-91 Hartford\70 Other\71 Demolition\01 CAD Files\Demo_Plan_P.dwg 7/30/2015 8:18 AM

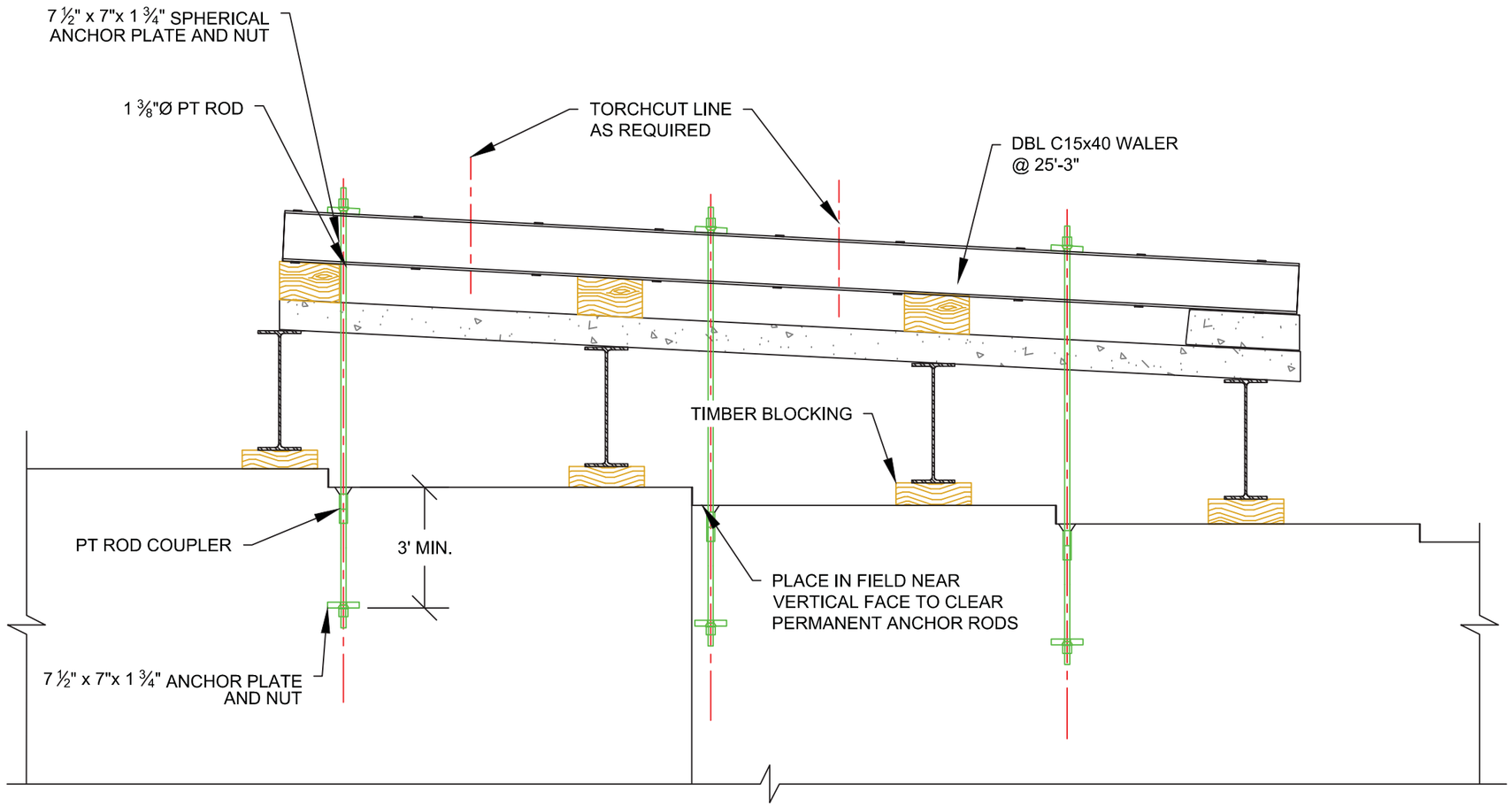

NB TEMPORARY TIEDOWNS

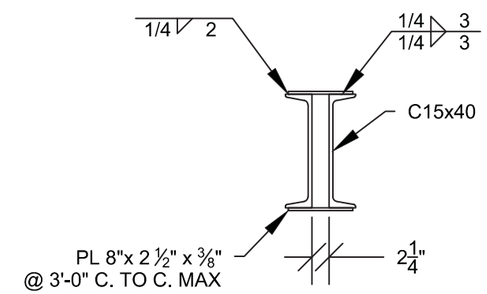

TYPICAL WALER SECTION

Revision No. & Date	Vermont Agency of Transportation			Engineer's Seal	Drawing Status		Name	Date	PCL Civil Constructors, Inc. 3810 Northdale Blvd. Suite 200, Tampa Florida 33624 (813)-264-9500 ; Fax: (813)-264-6689	
				STATE OF VERMONT TIMOTHY DAVIS NO. 97183 CIVIL LICENSED PROFESSIONAL ENGINEER	Jul 30 2015 12:47 PM FOR CONSTRUCTION	Drawn By	AJT	06/03/15		
	Road No.	County / City	Financial Project ID No.			Design By	TMD/ AJT	06/03/15	Submittal DEMOLITION PLAN	PCL Project / Job No. I-91 Windsor / Hartford / 5514001
	I-91	Windsor / Hartford	IM 091-2(79)			Check By	TMD	06/30/15	Drawing Title TIEDOWN DETAILS (2)	Sheet No. 10

N:\District Office\Engineering\01 TIG Tampa Active Projects\5514001 - I-91 Hartford\70 Other\71 Demolition\01 CAD Files\Demo_Plan_P.dwg 7/30/2015 8:19 AM

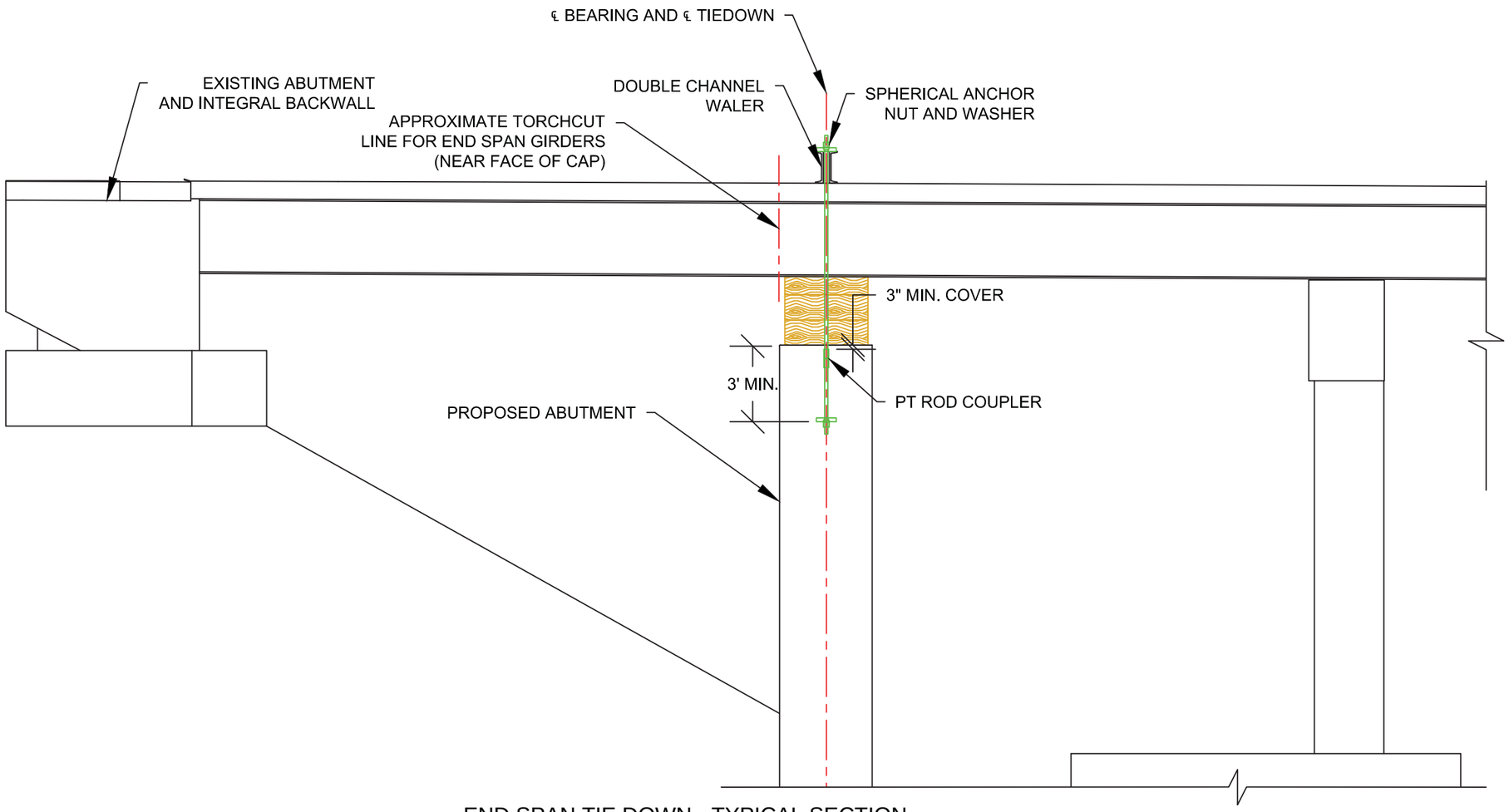

END SPAN TIE DOWN - TYPICAL SECTION

AFTER CLOSURE, REMOVE TOP ROD FROM COUPLER AND
PATCH HOLE WITH APPROVED GROUT/MORTAR

Revision No. & Date	Vermont Agency of Transportation			Engineer's Seal	Drawing Status		Name	Date	PCL Civil Constructors, Inc. 3810 Northdale Blvd. Suite 200, Tampa Florida 33624 (813)-264-9500 ; Fax: (813)-264-6689	
				STATE OF VERMONT TIMOTHY DAVIS NO. 97183 CIVIL LICENSED PROFESSIONAL ENGINEER	Jul 30 2015 12:47 PM FOR CONSTRUCTION	Drawn By	AJT	06/03/15		
	Road No.	County / City	Financial Project ID No.			Design By	TMD/ AJT	06/03/15	Submittal DEMOLITION PLAN	PCL Project / Job No. I-91 Windsor / Hartford / 5514001
	I-91	Windsor / Hartford	IM 091-2(79)			Check By	TMD	06/30/15	Drawing Title TIEDOWN DETAILS (3)	Sheet No. 11

N:\District Office\Engineering\01 TIG Tampa Active Projects\5514001 - I-91 Hartford\70 Other\71 Demolition\01 CAD Files\Demo_Plan_P.dwg 7/30/2015 8:19 AM

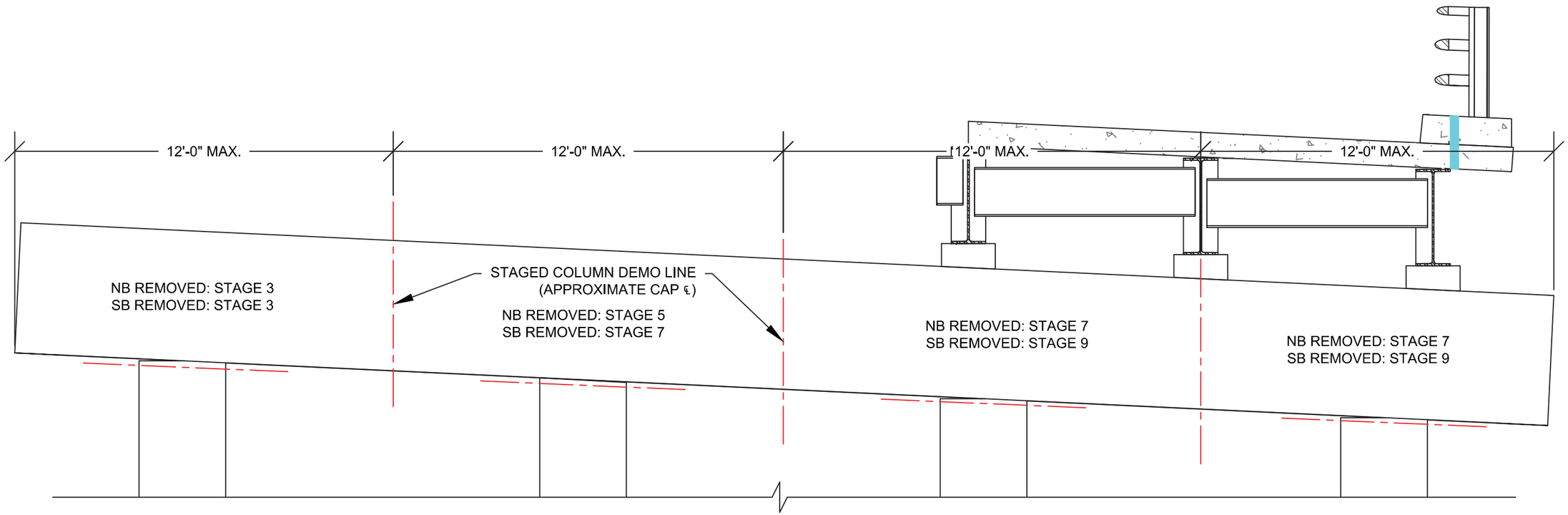

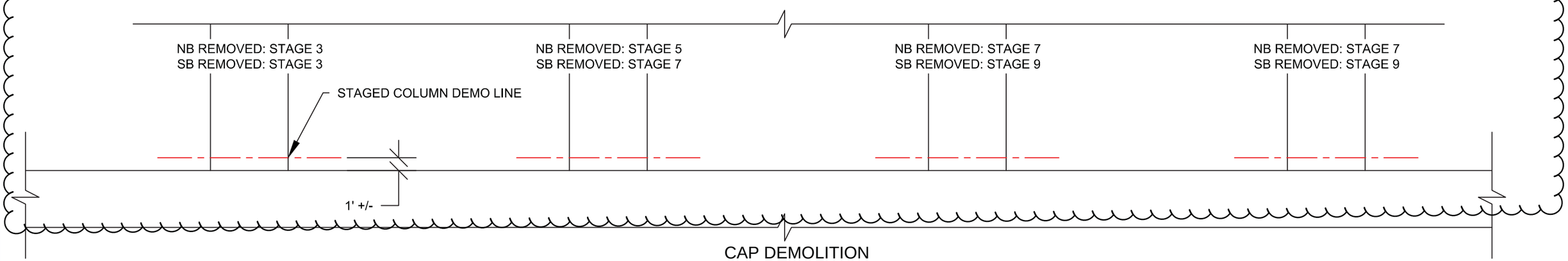

CAP DEMOLITION

NB BRIDGE SHOWN, SB MIRROR IMAGE
COLUMN STUB AND FOOTING (AS REQ'D) TO BE REMOVED
AFTER CLOSURE

1

Revision No. & Date	Vermont Agency of Transportation			Engineer's Seal	Drawing Status		Name	Date	PCL Civil Constructors, Inc. 3810 Northdale Blvd. Suite 200, Tampa Florida 33624 (813)-264-9500 ; Fax: (813)-264-6689	
Rev. 1. 7/30/2015				STATE OF VERMONT TIMOTHY DAVIS NO. 97183 CIVIL LICENSED PROFESSIONAL ENGINEER	Jul 30 2015 12:49 PM FOR CONSTRUCTION	Drawn By	AJT	06/03/15		
	Road No.	County / City	Financial Project ID No.			Design By	TMD/ AJT	06/03/15	Submittal DEMOLITION PLAN	PCL Project / Job No. I-91 Windsor / Hartford / 5514001
	I-91	Windsor / Hartford	IM 091-2(79)			Check By	TMD	06/30/15	Drawing Title CAP DEMOLITION	Sheet No. 12

N:\District Office\Engineering\01 TIG Tampa Active Projects\5514001 - I-91 Hartford\70 Other\71 Demolition\01 CAD Files\Demo_Plan_P.dwg 7/30/2015 8:20 AM

CRANE INFO:		GROVE RTC-8080	TADANO GR-750XL	LINK BELT LS-248H II	LINK BELT 298 HSL
BOOM LENGTH:	ft	90	88.6, TELE MODE I	120	120
PIECE TYPE		DECK OVERHANG	DECK OVERHANG	DECK OVERHANG	DECK OVERHANG
MAX. PIECE WEIGHT	lbs	14,000	14,000	14,000	14,000
PICK WEIGHT + RIGGING:	lbs	16,330	16,330	22,913	22,913
MAX. CRANE RADIUS:	ft	55	45	100	110
CRANE CAPACITY:	ft	20,400	22,200	31,400	31,700
% OF CHART:		80%	74%	73%	72%

CRANE INFO:		GROVE RTC-8080	TADANO GR-750XL	LINK BELT LS-248H II	LINK BELT 298 HSL
BOOM LENGTH:	ft	90	88.6, TELE MODE I	120	120
PIECE TYPE		DECK SECTION	DECK SECTION	DECK SECTION	DECK SECTION
MAX. PIECE WEIGHT	lbs	12,000	12,000	12,000	12,000
PICK WEIGHT + RIGGING:	lbs	14,330	14,330	20,913	20,913
MAX. CRANE RADIUS:	ft	55	50	110	117
CRANE CAPACITY:	ft	20,400	18,100	27,500	28,900
% OF CHART:		70%	79%	76%	72%

NB DEMOLITION - STAGE 1

1. LAYOUT CORE HOLES AS SHOWN ON SHEETS 02, 04 AND 08 UNDER LANE CLOSURES..
2. CORE DRILL HOLES IN BRIDGE DECK UNDER LANE CLOSURES. FLAG TRAFFIC FOR HOLES IN SUSPENDED SPAN.
3. REMOVE ASPHALT FROM BRIDGE SURFACE UNDER LANE CLOSURES.
4. INSTALL TEMPORARY BARRIER WALL AND SECURE TO BRIDGE DECK PER THE TRAFFIC CONTROL PLAN.
5. LAYOUT SAWCUTS AS SHOWN ON SHEETS 02 AND 04.
6. COMPLETE PLUNGE CUTS IN OVERHANG. FLAG TRAFFIC FOR CUTS IN SUSPENDED SPAN.
7. SET UP SB LEFT LANE CLOSURE FOR STAGING OF DEBRIS REMOVAL TRUCKS.
8. REMOVE OVERHANG DECK SECTIONS. FLAG TRAFFIC FOR CUTS IN SUSPENDED SPAN.
   - 8.1. RIG TO SECTION PER RIGGING DETAILS ON SHEET 08.
   - 8.2. REMOVE SLACK FROM RIGGING.
   - 8.3. PERFORM FINAL LONGITUDINAL CUT TO RELEASE PIECE.
9. COMPLETE LONGITUDINAL AND TRANSVERSE CUTS BETWEEN G1 AND G3.
10. AS CUTS IN SECTIONS ARE COMPLETED, RIG TO SLAB SECTION PER DETAIL ON SHEET 08 AND REMOVE.

NB DEMOLITION - STAGE 1

PRE-CLOSURE WORK

Revision No. & Date	Vermont Agency of Transportation			Drawing Status		Name	Date	PCL Civil Constructors, Inc. 3810 Northdale Blvd. Suite 200, Tampa Florida 33624 (813)-264-9500 ; Fax: (813)-264-6689	
				Jul 30 2015 12:49 PM FOR CONSTRUCTION	Drawn By	AJT	06/03/15		
	Road No.	County / City	Financial Project ID No.		Design By	TMD/ AJT	06/03/15	Submittal DEMOLITION PLAN	PCL Project / Job No. I-91 Windsor / Hartford / 5514001
	I-91	Windsor / Hartford	IM 091-2(79)		Check By	TMD	06/30/15	Drawing Title NB DEMO - STAGE 1	Sheet No. 13

STATE OF VERMONT · TIMOTHY DAVIS · NO. 97183 · CIVIL · LICENSED · PROFESSIONAL ENGINEER

CRANE INFO:		GROVE RTC-8080	TADANO GR-750XL
BOOM LENGTH:	ft	90	88.6, TELE MODE I
PIECE TYPE		SUSPENDED GIRDER	SUSPENDED GIRDER
MAX. PIECE WEIGHT	lbs	25,000	25,000
PICK WEIGHT + RIGGING:	lbs	14,830	14,830
MAX. CRANE RADIUS:	ft	55	45
CRANE CAPACITY:	ft	20,400	22,200
% OF CHART:		73%	67%

CRANE INFO:		LINK BELT LS-248H II	LINK BELT 298 HSL
BOOM LENGTH:	ft	120	120
PIECE TYPE		END SPAN GIRDER	END SPAN GIRDER
MAX. PIECE WEIGHT	lbs	11,700	11,700
PICK WEIGHT + RIGGING:	lbs	20,613	20,613
MAX. CRANE RADIUS:	ft	110	117
CRANE CAPACITY:	ft	27,500	28,900
% OF CHART:		75%	71%

NB DEMOLITION - STAGE 2

1. SET UP FLAGGING OPERATIONS.
2. SET UP SB LEFT LANE CLOSURE FOR STAGING OF DEBRIS REMOVAL TRUCKS.
3. RIG TO SUSPENDED SPAN G1 AS SHOWN ON SHEET 07. REMOVE SLACK FROM MAIN LINES AND RIGGING.
4. STOP TRAFFIC.
5. TORCH CUT OR UNBOLT DIAPHRAGMS AT LOCATIONS SHOWN ON SHEET 05 AND SET ONTO HAUL TRUCK.
6. RELEASE GIRDER FROM CRANES AND RELEASE TRAFFIC.
7. RIG TO END SPAN GIRDERS PER DETAIL ON SHEET 06. REMOVE SLACK FROM MAIN LINES AND RIGGING.
8. TORCH CUT OR UNBOLT GIRDER AS SHOWN ON SHEET 11 AND DIAPHRAGMS AT LOCATIONS SHOWN ON SHEET 05.
9. SET ONTO HAUL TRUCK AND RELEASE GIRDER FROM CRANE.
10. REPEAT STEPS 2-8 FOR G2.

NB DEMOLITION - STAGE 2

PRE-CLOSURE-WORK

Revision No. & Date	Vermont Agency of Transportation			Engineer's Seal	Drawing Status		Name	Date	PCL Civil Constructors, Inc. 3810 Northdale Blvd. Suite 200, Tampa Florida 33624 (813)-264-9500 ; Fax: (813)-264-6689	
				STATE OF VERMONT TIMOTHY DAVIS NO. 97183 CIVIL LICENSED PROFESSIONAL ENGINEER	Jul 30 2015 12:49 PM FOR CONSTRUCTION	Drawn By	AJT	06/03/15		
	Road No.	County / City	Financial Project ID No.			Design By	TMD/ AJT	06/03/15	Submittal DEMOLITION PLAN	PCL Project / Job No. I-91 Windsor / Hartford / 5514001
	I-91	Windsor / Hartford	IM 091-2(79)			Check By	TMD	06/30/15	Drawing Title NB DEMO - STAGE 2	Sheet No. 14

H:\District Office\Engineering\01 T60 Tempo Active Projects\5514001 - I-91 Hartford\70 Other\71 Demolition\01 CAD Files\Demo_Plan_P.dwg 7/30/2015 9:47 AM

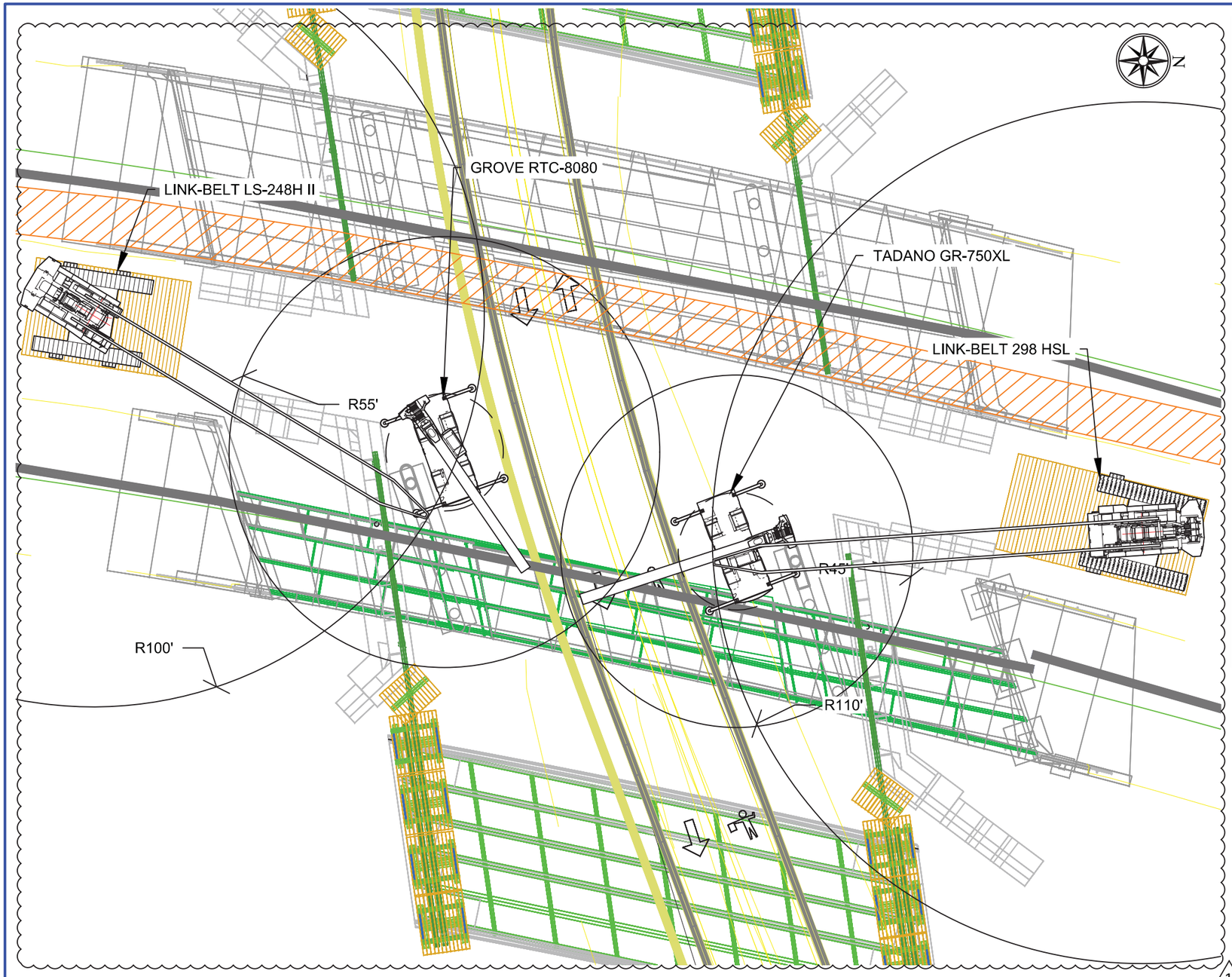

1

NB DEMOLITION - STAGE 3

CLOSURE WORK

CRANE INFO:		GROVE RTC-8080	TADANO GR-750XL	LINK BELT LS-248H II	LINK BELT 298 HSL
BOOM LENGTH:	ft	90	88.6, TELE MODE I	120	120
PIECE TYPE		DECK OVERHANG	DECK OVERHANG	DECK OVERHANG	DECK OVERHANG
MAX. PIECE WEIGHT	lbs	14,000	14,000	14,000	14,000
PICK WEIGHT + RIGGING:	lbs	16,330	16,330	22,913	22,913
MAX. CRANE RADIUS:	ft	55	45	100	110
CRANE CAPACITY:	ft	20,400	22,200	31,400	31,700
% OF CHART:		80%	74%	73%	72%

CRANE INFO:		GROVE RTC-8080	TADANO GR-750XL	LINK BELT LS-248H II	LINK BELT 298 HSL
BOOM LENGTH:	ft	90	88.6, TELE MODE I	120	120
PIECE TYPE		DECK SECTION	DECK SECTION	DECK SECTION	DECK SECTION
MAX. PIECE WEIGHT	lbs	12,000	12,000	12,000	12,000
PICK WEIGHT + RIGGING:	lbs	14,330	14,330	20,913	20,913
MAX. CRANE RADIUS:	ft	55	50	110	117
CRANE CAPACITY:	ft	20,400	18,100	27,500	28,900
% OF CHART:		70%	79%	76%	72%

NB DEMOLITION - STAGE 3

1. SET UP SB LEFT LANE CLOSURE FOR STAGING OF DEBRIS REMOVAL TRUCKS.
2. REMOVE TEMPORARY BARRIER WALL.
3. COMPLETE LONGITUDINAL AND TRANSVERSE CUTS. FLAG TRAFFIC FOR CUTS IN SUSPENDED SPAN.
4. AS SECTIONS ARE COMPLETELY CUT, RIG TO SLAB SECTION PER DETAIL ON SHEET 08 AND REMOVE.
5. REMOVE ALL DECK SLABS BETWEEN G3 AND G4 FROM THE CENTER OF THE SPAN OUTWARDS. REMOVE EXTERIOR OVERHANG SECTIONS BEFORE REMOVING INTERIOR SLAB SECTIONS. END SPAN SLAB REMOVAL TO BE SEQUENCED SO THAT WEIGHT ON END SPAN PROVIDES A MINIMUM 1.5 FACTOR OF SAFETY AGAINST OVERTURNING IN THE SUSPENDED SPAN. THIS WORK WILL BE DIRECTED ON SITE BY THE CONSTRUCTION ENGINEER.

Revision No. & Date	Vermont Agency of Transportation			Engineer's Seal	Drawing Status		Name	Date	PCL Civil Constructors, Inc. 3810 Northdale Blvd. Suite 200, Tampa Florida 33624 (813)-264-9500 ; Fax: (813)-264-6689	
Rev. 1. 7/30/2015				STATE OF VERMONT TIMOTHY DAVIS NO. 97183 CIVIL LICENSED PROFESSIONAL ENGINEER	Jul 30 2015 12:49 PM FOR CONSTRUCTION	Drawn By	AJT	06/03/15		
	Road No.	County / City	Financial Project ID No.			Design By	TMD/ AJT	06/03/15	Submittal DEMOLITION PLAN	PCL Project / Job No. I-91 Windsor / Hartford / 5514001
	I-91	Windsor / Hartford	IM 091-2(79)			Check By	TMD	06/30/15	Drawing Title NB DEMO - STAGE 3	Sheet No. 15

I:\District Office\Engineering\01 TIG Tampa Active Projects\5514001 - I-91 Hartford\03 Other\71 Demolition\01 CAD Files\Demo_Plan_P.dwg 7/30/2015 9:23 AM

NB DEMOLITION - STAGE 3

CLOSURE WORK

CRANE INFO:		GROVE RTC-8080	TADANO GR-750XL
BOOM LENGTH:	ft	90	88.6, TELE MODE I
PIECE TYPE		CAP SECTION	CAP SECTION
MAX. PIECE WEIGHT	lbs	23,000	23,000
PICK WEIGHT + RIGGING:	lbs	25,330	25,330
MAX. CRANE RADIUS:	ft	40	35
CRANE CAPACITY:	ft	35,800	34,700
% OF CHART:		71%	73%

CRANE INFO:		GROVE RTC-8080	TADANO GR-750XL
BOOM LENGTH:	ft	90	88.6, TELE MODE I
PIECE TYPE		COLUMN	COLUMN
MAX. PIECE WEIGHT	lbs	16,000	16,000
PICK WEIGHT + RIGGING:	lbs	18,330	18,330
MAX. CRANE RADIUS:	ft	55	40
CRANE CAPACITY:	ft	20,400	27,700
% OF CHART:		90%	66%

NB DEMOLITION - STAGE 3 (CON'T)

1. VERTICALLY CUT PIER CAP AT LOCATIONS SHOWN ON SHEET 12.
2. RIG TO EXTERIOR SECTION OF PIER CAP. (SEE DETAIL SHEET 08) REMOVE SLACK FROM RIGGING.
3. HORIZONTALLY CUT PIER CAP AT TOP OF EXTERIOR COLUMN AS SHOWN ON SHEET 12.
4. REMOVE CAP SECTION, FLAGGING TRAFFIC AS NECESSARY.
5. CHOKE TOP OF COLUMN AS SHOWN ON SHEET 08.
6. SAWCUT OR CHIP BOTTOM OF COLUMN. USE CRANE TO STABILIZE TOP OF COLUMN AS CUT IS MADE.
7. USE CRANE TO LAYOVER COLUMN ONTO FOOTING. CUT OR CHIP COLUMN ON GROUND FOR REMOVAL FROM SITE.

1

Revision No. & Date	Vermont Agency of Transportation			Drawing Status		Name	Date	PCL Civil Constructors, Inc. 3810 Northdale Blvd. Suite 200, Tampa Florida 33624 (813)-264-9500 ; Fax: (813)-264-6689	
Rev. 1. 7/30/2015				Jul 30 2015 12:52 PM FOR CONSTRUCTION	Drawn By	AJT	06/03/15		
	Road No.	County / City	Financial Project ID No.		Design By	TMD/ AJT	06/03/15	Submittal DEMOLITION PLAN	PCL Project / Job No. I-91 Windsor / Hartford / 5514001
	I-91	Windsor / Hartford	IM 091-2(79)		Check By	TMD	06/30/15	Drawing Title NB DEMO - STAGE 3 (1)	Sheet No. 15A

STATE OF VERMONT TIMOTHY DAVIS NO. 97183 CIVIL LICENSED PROFESSIONAL ENGINEER

N:\District Office\Engineering\01 TIG Tampa Active Projects\5514001 - I-91 Hartford\70 Other\71 Demolition\01 CAD Files\Demo_Plan_P.dwg 7/30/2015 9:24 AM

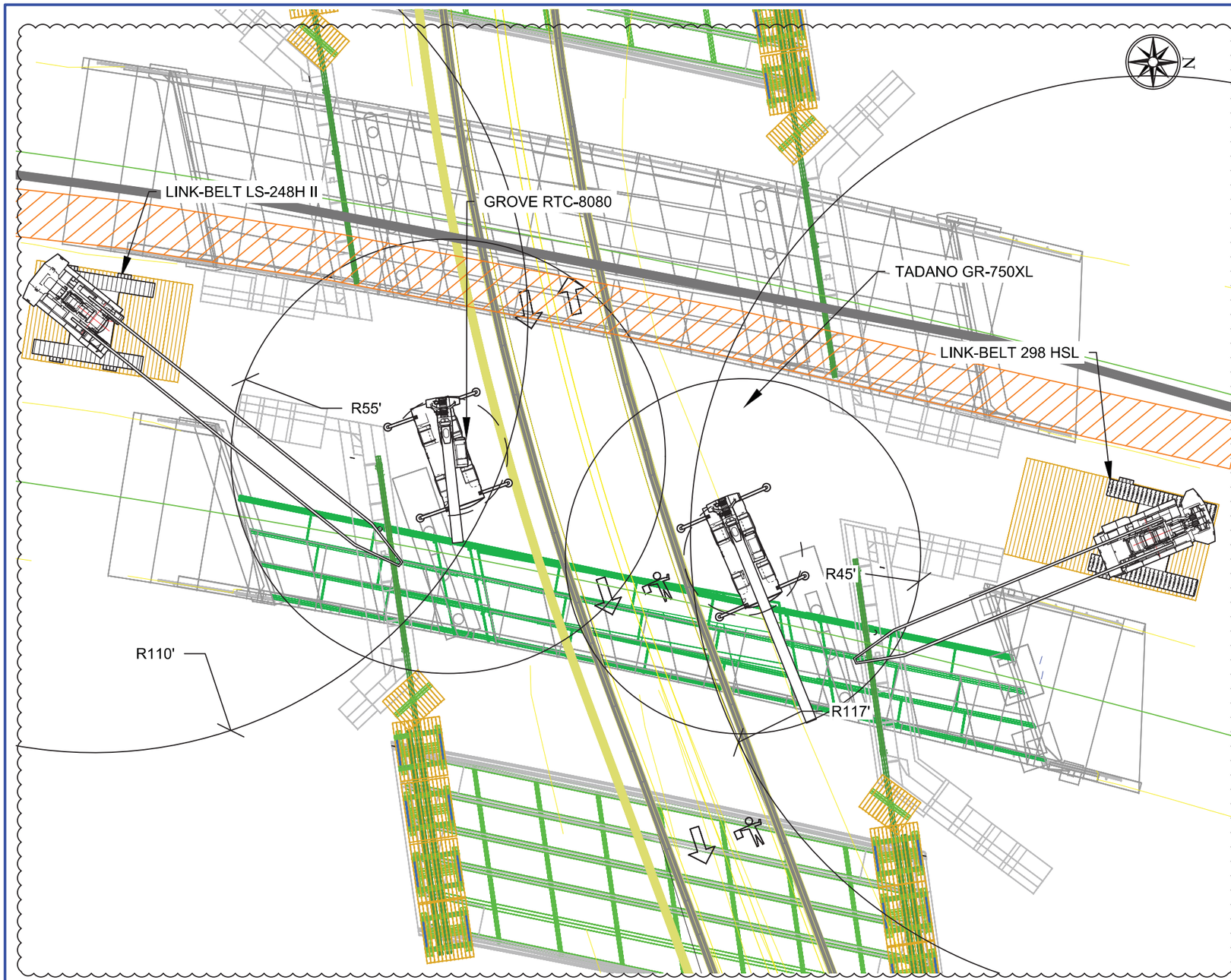

NB DEMOLITION - STAGE 4

CLOSURE WORK

CRANE INFO:		GROVE RTC-8080	TADANO GR-750XL
BOOM LENGTH:	ft	90	88.6, TELE MODE I
PIECE TYPE		SUSPENDED GIRDER	SUSPENDED GIRDER
MAX. PIECE WEIGHT	lbs	25,000	25,000
PICK WEIGHT + RIGGING:	lbs	14,830	14,830
MAX. CRANE RADIUS:	ft	55	45
CRANE CAPACITY:	ft	20,400	22,200
% OF CHART:		73%	67%

CRANE INFO:		LINK BELT LS-248H II	LINK BELT 298 HSL
BOOM LENGTH:	ft	120	120
PIECE TYPE		END SPAN GIRDER	END SPAN GIRDER
MAX. PIECE WEIGHT	lbs	11,700	11,700
PICK WEIGHT + RIGGING:	lbs	20,613	20,613
MAX. CRANE RADIUS:	ft	110	117
CRANE CAPACITY:	ft	27,500	28,900
% OF CHART:		75%	71%

NB DEMOLITION - STAGE 4

1. RIG TO SUSPENDED SPAN G3 AS SHOWN ON SHEET 07. REMOVE SLACK FROM MAIN LINES AND RIGGING.
2. STOP TRAFFIC.
3. TORCH CUT OR UNBOLT DIAPHRAGMS AT LOCATIONS SHOWN ON SHEET 05 AND SET ONTO HAUL TRUCK.
4. RELEASE GIRDER FROM CRANES AND RELEASE TRAFFIC.
5. RIG TO END SPAN GIRDERS PER DETAIL ON SHEET 06. REMOVE SLACK FROM MAIN LINES AND RIGGING.
6. TORCH CUT OR UNBOLT GIRDER AS SHOWN ON SHEET 11 AND DIAPHRAGMS AT LOCATIONS SHOWN ON SHEET 05
7. SET ONTO HAUL TRUCK AND RELEASE GIRDER FROM CRANE.

Revision No. & Date	Vermont Agency of Transportation			Engineer's Seal	Drawing Status		Name	Date	PCL Civil Constructors, Inc. 3810 Northdale Blvd. Suite 200, Tampa Florida 33624 (813)-264-9500 ; Fax: (813)-264-6689	
Rev. 1. 7/30/2015				STATE OF VERMONT TIMOTHY DAVIS NO. 97183 CIVIL LICENSED PROFESSIONAL ENGINEER	Jul 30 2015 12:52 PM FOR CONSTRUCTION	Drawn By	AJT	06/03/15		
	Road No.	County / City	Financial Project ID No.			Design By	TMD/ AJT	06/03/15	Submittal DEMOLITION PLAN	PCL Project / Job No. I-91 Windsor / Hartford / 5514001
	I-91	Windsor / Hartford	IM 091-2(79)			Check By	TMD	06/30/15	Drawing Title NB DEMO - STAGE 4	Sheet No. 16

H:\District Office\Engineering\01 TIG Tampa Active Projects\5514001 - I-91 Hartford\70 Other\71 Demolition\01 CAD Files\Demo_Plan_P.dwg 7/30/2015 9:23 AM

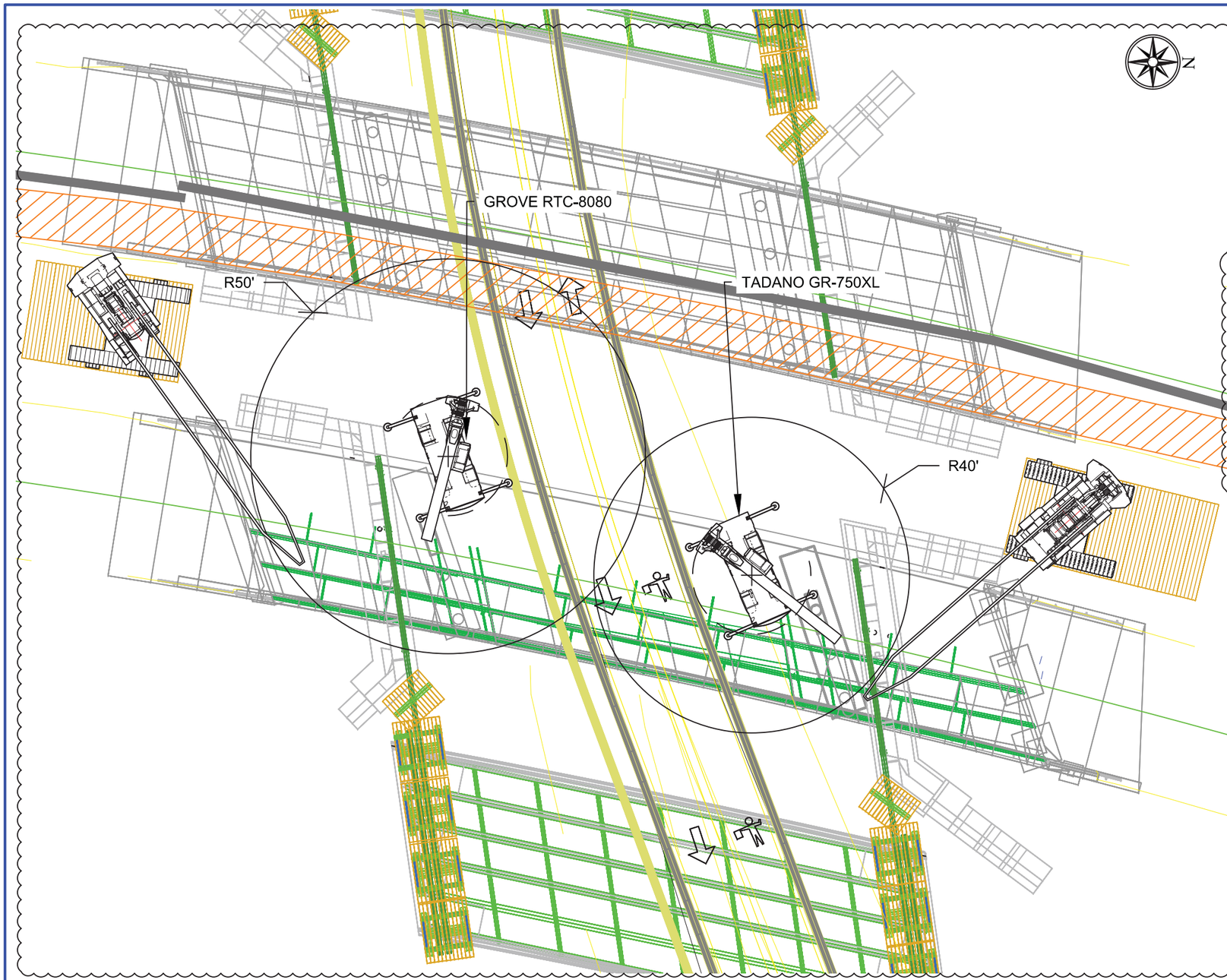

1

NB DEMOLITION - STAGE 5

CLOSURE WORK

CRANE INFO:		GROVE RTC-8080	TADANO GR-750XL
BOOM LENGTH:	ft	90	88.6, TELE MODE I
PIECE TYPE		CAP SECTION	CAP SECTION
MAX. PIECE WEIGHT	lbs	23,000	23,000
PICK WEIGHT + RIGGING:	lbs	25,330	25,330
MAX. CRANE RADIUS:	ft	40	35
CRANE CAPACITY:	ft	35,800	34,700
% OF CHART:		71%	73%

CRANE INFO:		GROVE RTC-8080	TADANO GR-750XL
BOOM LENGTH:	ft	90	88.6, TELE MODE I
PIECE TYPE		COLUMN	COLUMN
MAX. PIECE WEIGHT	lbs	16,000	16,000
PICK WEIGHT + RIGGING:	lbs	18,330	18,330
MAX. CRANE RADIUS:	ft	55	40
CRANE CAPACITY:	ft	20,400	27,700
% OF CHART:		90%	66%

1

NB DEMOLITION - STAGE 5

1. VERTICALLY CUT PIER CAP AT LOCATIONS SHOWN ON SHEET 12.
2. RIG TO EXTERIOR SECTION OF PIER CAP. (SEE DETAIL SHEET 08) REMOVE SLACK FROM RIGGING.
3. HORIZONTALLY CUT PIER CAP AT TOP OF EXTERIOR COLUMN AS SHOWN ON SHEET 12.
4. REMOVE CAP SECTION, FLAGGING TRAFFIC AS NECESSARY.
5. CHOKE TOP OF COLUMN AS SHOWN ON SHEET 08.
6. SAWCUT OR CHIP BOTTOM OF COLUMN. USE CRANE TO STABILIZE TOP OF COLUMN AS CUT IS MADE.
7. USE CRANE TO LAYOVER COLUMN ONTO FOOTING. CUT OR CHIP COLUMN ON GROUND FOR REMOVAL FROM SITE.

Revision No. & Date	Vermont Agency of Transportation			Engineer's Seal	Drawing Status		Name	Date	PCL Civil Constructors, Inc. 3810 Northdale Blvd. Suite 200, Tampa Florida 33624 (813)-264-9500 ; Fax: (813)-264-6689	
Rev. 1. 7/30/2015				STATE OF VERMONT TIMOTHY DAVIS NO. 97183 CIVIL LICENSED PROFESSIONAL ENGINEER	Jul 30 2015 12:52 PM FOR CONSTRUCTION	Drawn By	AJT	06/03/15		
	Road No.	County / City	Financial Project ID No.			Design By	TMD/ AJT	06/03/15	Submittal DEMOLITION PLAN	PCL Project / Job No. I-91 Windsor / Hartford / 5514001
	I-91	Windsor / Hartford	IM 091-2(79)			Check By	TMD	06/30/15	Drawing Title NB DEMO - STAGE 5	Sheet No. 17

N:\District Office\Engineering\01 TR\ Tampa Active Projects\5514001 - I-91 Hartford\70 Other\71 Demolition\01 CAD Files\Demo_Plan_P.dwg 7/30/2015 8:28 AM

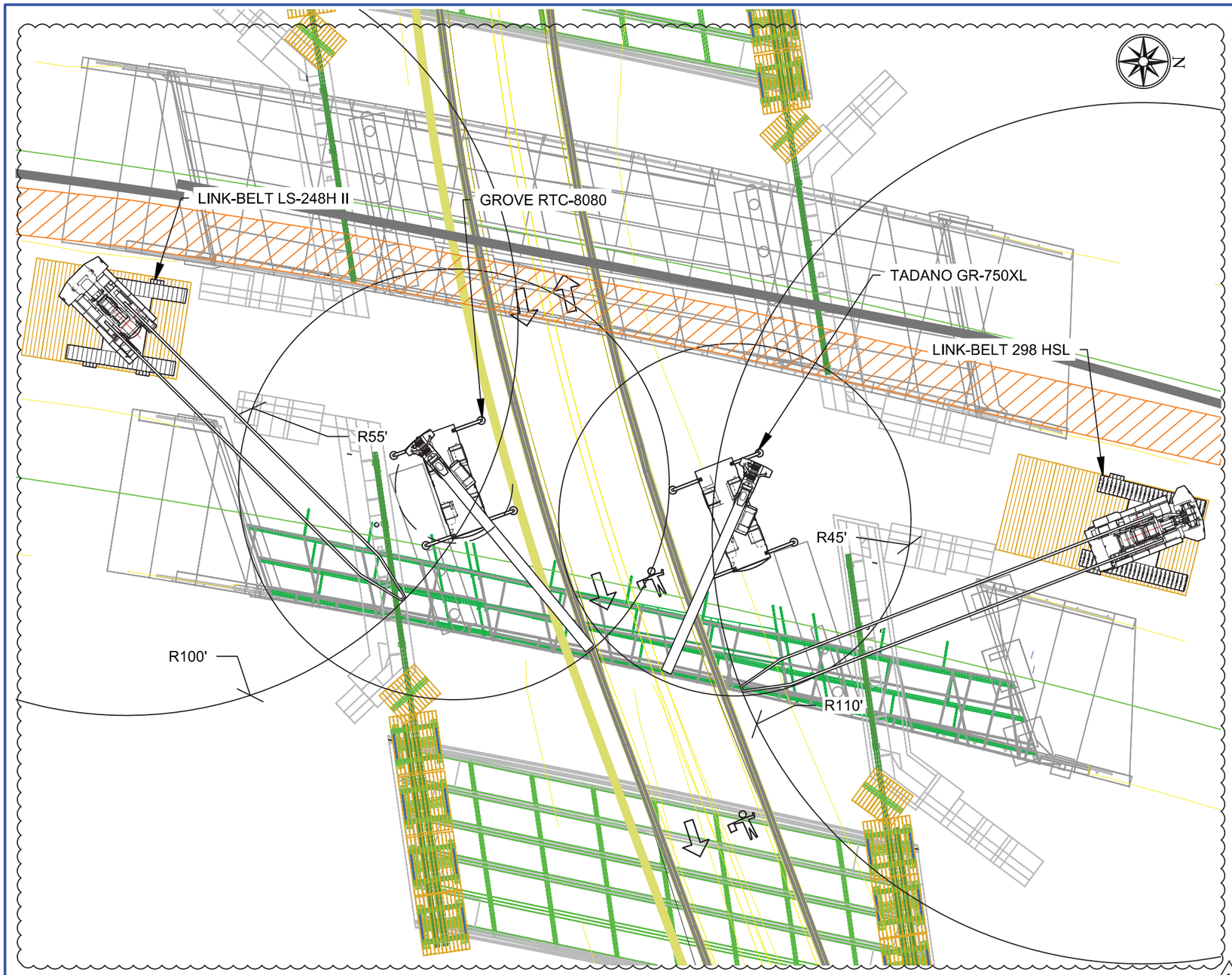

1

NB DEMOLITION - STAGE 6

CLOSURE WORK

CRANE INFO:		GROVE RTC-8080	TADANO GR-750XL	LINK BELT LS-248H II	LINK BELT 298 HSL
BOOM LENGTH:	ft	90	88.6, TELE MODE I	120	120
PIECE TYPE		DECK OVERHANG	DECK OVERHANG	DECK OVERHANG	DECK OVERHANG
MAX. PIECE WEIGHT	lbs	14,000	14,000	14,000	14,000
PICK WEIGHT + RIGGING:	lbs	16,330	16,330	22,913	22,913
MAX. CRANE RADIUS:	ft	55	45	100	110
CRANE CAPACITY:	ft	20,400	22,200	31,400	31,700
% OF CHART:		80%	74%	73%	72%

CRANE INFO:		GROVE RTC-8080	TADANO GR-750XL	LINK BELT LS-248H II	LINK BELT 298 HSL
BOOM LENGTH:	ft	90	88.6, TELE MODE I	120	120
PIECE TYPE		DECK SECTION	DECK SECTION	DECK SECTION	DECK SECTION
MAX. PIECE WEIGHT	lbs	12,000	12,000	12,000	12,000
PICK WEIGHT + RIGGING:	lbs	14,330	14,330	20,913	20,913
MAX. CRANE RADIUS:	ft	55	50	110	117
CRANE CAPACITY:	ft	20,400	18,100	27,500	28,900
% OF CHART:		70%	79%	76%	72%

NB DEMOLITION - STAGE 6

1. COMPLETE PLUNGE CUTS IN OVERHANG. FLAG TRAFFIC FOR CUTS IN SUSPENDED SPAN.
2. REMOVE OVERHANG DECK SECTIONS. FLAG TRAFFIC FOR CUTS IN SUSPENDED SPAN.
   - 2.1. RIG TO SECTION PER RIGGING DETAILS ON SHEET 08.
   - 2.2. REMOVE SLACK FROM RIGGING.
   - 2.3. PERFORM FINAL LONGITUDINAL CUT TO RELEASE PIECE.
3. COMPLETE ANY REMAINING TRANSVERSE CUTS BETWEEN G5 AND G5.
4. AS CUTS IN SECTIONS ARE COMPLETED, RIG TO SLAB SECTION PER DETAIL ON SHEET 08 AND REMOVE.
5. REMOVE ALL DECK SLABS BETWEEN G5 AND G6 FROM THE CENTER OF THE SPAN OUTWARDS. END SPAN SLAB REMOVAL TO BE SEQUENCED SO THAT WEIGHT ON END SPAN PROVIDES A MINIMUM 1.5 FACTOR OF SAFETY AGAINST OVERTURNING IN THE SUSPENDED SPAN. THIS WORK WILL BE DIRECTED ON SITE BY THE CONSTRUCTION ENGINEER.

Revision No. & Date	Vermont Agency of Transportation			Engineer's Seal	Drawing Status		Name	Date	PCL Civil Constructors, Inc. 3810 Northdale Blvd. Suite 200, Tampa Florida 33624 (813)-264-9500 ; Fax: (813)-264-6689	
Rev. 1. 7/30/2015				STATE OF VERMONT TIMOTHY DAVIS NO. 97183 CIVIL LICENSED PROFESSIONAL ENGINEER	Jul 30 2015 12:52 PM FOR CONSTRUCTION	Drawn By	AJT	06/03/15		
	Road No.	County / City	Financial Project ID No.			Design By	TMD/ AJT	06/03/15	Submittal DEMOLITION PLAN	PCL Project / Job No. I-91 Windsor / Hartford / 5514001
	I-91	Windsor / Hartford	IM 091-2(79)			Check By	TMD	06/30/15	Drawing Title NB DEMO - STAGE 6	Sheet No. 18

N:\District Office\Engineering\01 TIG Tampa Active Projects\5514001 - I-91 Hartford\03 Office\11 Demolition\01 CAD Files\Demo_Plan_P.dwg 7/30/2015 9:27 AM

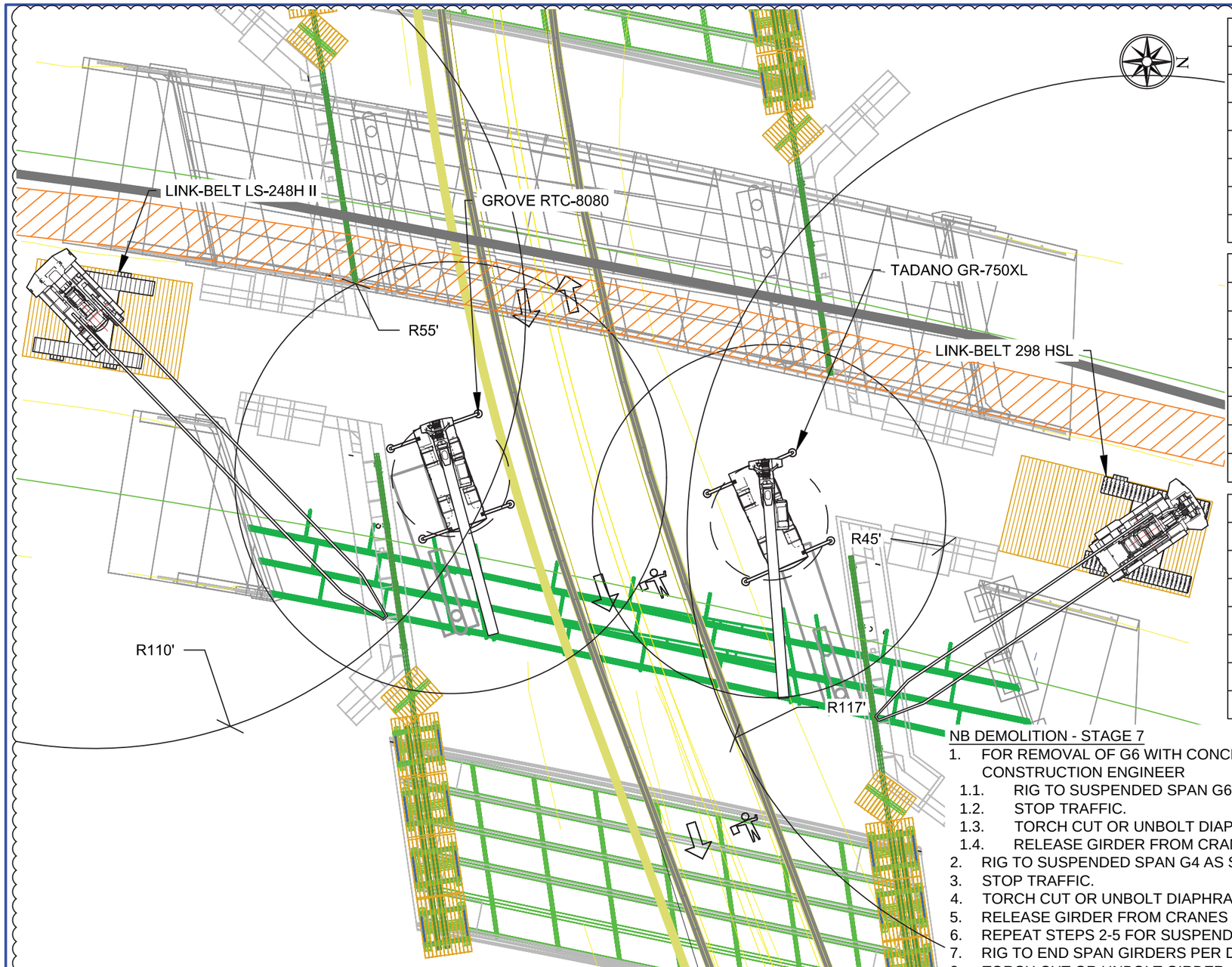

CRANE INFO:		GROVE RTC-8080	TADANO GR-750XL
BOOM LENGTH:	ft	90	88.6, TELE MODE I
PIECE TYPE		SUSPENDED GIRDER	SUSPENDED GIRDER
MAX. PIECE WEIGHT	lbs	25,000	25,000
PICK WEIGHT + RIGGING:	lbs	14,830	14,830
MAX. CRANE RADIUS:	ft	55	45
CRANE CAPACITY:	ft	20,400	22,200
% OF CHART:		73%	67%

CRANE INFO:		GROVE RTC-8080	TADANO GR-750XL
BOOM LENGTH:	ft	90	88.6, TELE MODE I
PIECE TYPE		SUSP. GIRDER NB G6	SUSP. GIRDER NB G6
MAX. PIECE WEIGHT	lbs	25,000	25,000
PICK WEIGHT + RIGGING:	lbs	12,500	12,500
MAX. CRANE RADIUS:	ft	55	45
CRANE CAPACITY:	ft	20,400	22,200
% OF CHART:		61%	56%

CRANE INFO:		LINK BELT LS-248H II	LINK BELT 298 HSL
BOOM LENGTH:	ft	120	120
PIECE TYPE		END SPAN GIRDER	END SPAN GIRDER
MAX. PIECE WEIGHT	lbs	11,700	11,700
PICK WEIGHT + RIGGING:	lbs	20,613	20,613
MAX. CRANE RADIUS:	ft	110	117
CRANE CAPACITY:	ft	27,500	28,900
% OF CHART:		75%	71%

NB DEMOLITION - STAGE 7

1. FOR REMOVAL OF G6 WITH CONCRETE OVERHANG STILL IN PLACE. THIS STEP USED AT THE DIRECTION OF THE CONSTRUCTION ENGINEER
   - 1.1. RIG TO SUSPENDED SPAN G6 AS SHOWN ON SHEET 07. REMOVE SLACK FROM MAIN LINES AND RIGGING.
   - 1.2. STOP TRAFFIC.
   - 1.3. TORCH CUT OR UNBOLT DIAPHRAGMS AT LOCATIONS SHOWN ON SHEET 05 AND SET ONTO HAUL TRUCK.
   - 1.4. RELEASE GIRDER FROM CRANES AND RELEASE TRAFFIC.
2. RIG TO SUSPENDED SPAN G4 AS SHOWN ON SHEET 07. REMOVE SLACK FROM MAIN LINES AND RIGGING.
3. STOP TRAFFIC.
4. TORCH CUT OR UNBOLT DIAPHRAGMS AT LOCATIONS SHOWN ON SHEET 05 AND SET ONTO HAUL TRUCK.
5. RELEASE GIRDER FROM CRANES AND RELEASE TRAFFIC.
6. REPEAT STEPS 2-5 FOR SUSPENDED SPAN G5.
7. RIG TO END SPAN GIRDERS PER DETAIL ON SHEET 06. REMOVE SLACK FROM MAIN LINES AND RIGGING.
8. TORCH CUT OR UNBOLT GIRDER AS SHOWN ON SHEET 11 AND DIAPHRAGMS AT LOCATIONS SHOWN ON SHEET 05
9. SET ONTO HAUL TRUCK AND RELEASE GIRDER FROM CRANE.
10. REPEAT STEPS 6-8 FOR END SPAN GIRDER G5 AND G6.

NB DEMOLITION - STAGE 7

CLOSURE WORK

1

Revision No. & Date	Vermont Agency of Transportation			Engineer's Seal	Drawing Status		Name	Date	PCL Civil Constructors, Inc.	
Rev. 1. 7/30/2015				STATE OF VERMONT TIMOTHY DAVIS NO. 97183 CIVIL LICENSED PROFESSIONAL ENGINEER	Jul 30 2015 12:54 PM FOR CONSTRUCTION	Drawn By	AJT	06/03/15	3810 Northdale Blvd. Suite 200, Tampa Florida 33624 (813)-264-9500 ; Fax: (813)-264-6689	
	Road No.	County / City	Financial Project ID No.			Design By	TMD/ AJT	06/03/15	Submittal DEMOLITION PLAN	PCL Project / Job No. I-91 Windsor / Hartford / 5514001
	I-91	Windsor / Hartford	IM 091-2(79)			Check By	TMD	06/30/15	Drawing Title NB DEMO - STAGE 7	Sheet No. 19

N:\District Office\Engineering\01 TIG Tampa Active Projects\5514001 - I-91 Hartford\70 Other\71 Demolition\01 CAD Files\Demo_Plan_P.dwg 7/30/2015 8:28 AM

CRANE INFO:		GROVE RTC-8080	TADANO GR-750XL
BOOM LENGTH:	ft	90	88.6, TELE MODE I
PIECE TYPE		CAP SECTION	CAP SECTION
MAX. PIECE WEIGHT	lbs	23,000	23,000
PICK WEIGHT + RIGGING:	lbs	25,330	25,330
MAX. CRANE RADIUS:	ft	40	35
CRANE CAPACITY:	ft	35,800	34,700
% OF CHART:		71%	73%

CRANE INFO:		GROVE RTC-8080	TADANO GR-750XL
BOOM LENGTH:	ft	90	88.6, TELE MODE I
PIECE TYPE		COLUMN	COLUMN
MAX. PIECE WEIGHT	lbs	16,000	16,000
PICK WEIGHT + RIGGING:	lbs	18,330	18,330
MAX. CRANE RADIUS:	ft	55	40
CRANE CAPACITY:	ft	20,400	27,700
% OF CHART:		90%	66%

NB DEMOLITION - STAGE 7 (CON'T)

1. VERTICALLY CUT PIER CAP AT LOCATIONS SHOWN ON SHEET 12.
2. RIG TO EXTERIOR SECTION OF PIER CAP. (SEE DETAIL SHEET 08) REMOVE SLACK FROM RIGGING.
3. HORIZONTALLY CUT PIER CAP AT TOP OF EXTERIOR COLUMN AS SHOWN ON SHEET 12.
4. REMOVE CAP SECTION, FLAGGING TRAFFIC AS NECESSARY.
5. CHOKE TOP OF COLUMN AS SHOWN ON SHEET 08.
6. SAWCUT OR CHIP BOTTOM OF COLUMN. USE CRANE TO STABILIZE TOP OF COLUMN AS CUT IS MADE.
7. USE CRANE TO LAYOVER COLUMN ONTO FOOTING. CUT OR CHIP COLUMN ON GROUND FOR REMOVAL FROM SITE.

NB DEMOLITION - STAGE 7

CLOSURE WORK

1

Revision No. & Date	Vermont Agency of Transportation			Drawing Status		Name	Date	PCL Civil Constructors, Inc. 3810 Northdale Blvd. Suite 200, Tampa Florida 33624 (813)-264-9500 ; Fax: (813)-264-6689	
Rev. 1. 7/30/2015				Jul 30 2015 12:54 PM FOR CONSTRUCTION	Drawn By	AJT	06/03/15		
	Road No.	County / City	Financial Project ID No.		Design By	TMD/ AJT	06/03/15	Submittal DEMOLITION PLAN	PCL Project / Job No. I-91 Windsor / Hartford / 5514001
	I-91	Windsor / Hartford	IM 091-2(79)		Check By	TMD	06/30/15	Drawing Title NB DEMO - STAGE 7 (1)	Sheet No. 19A

STATE OF VERMONT TIMOTHY DAVIS NO. 97183 CIVIL LICENSED PROFESSIONAL ENGINEER

H:\District Office\Engineering\01 TIG Tampa Active Projects\5514001 - I-91 Hartford\70 Other\71 Demolition\01 CAD Files\Demo_Plan_P.dwg 7/30/2015 9:28 AM

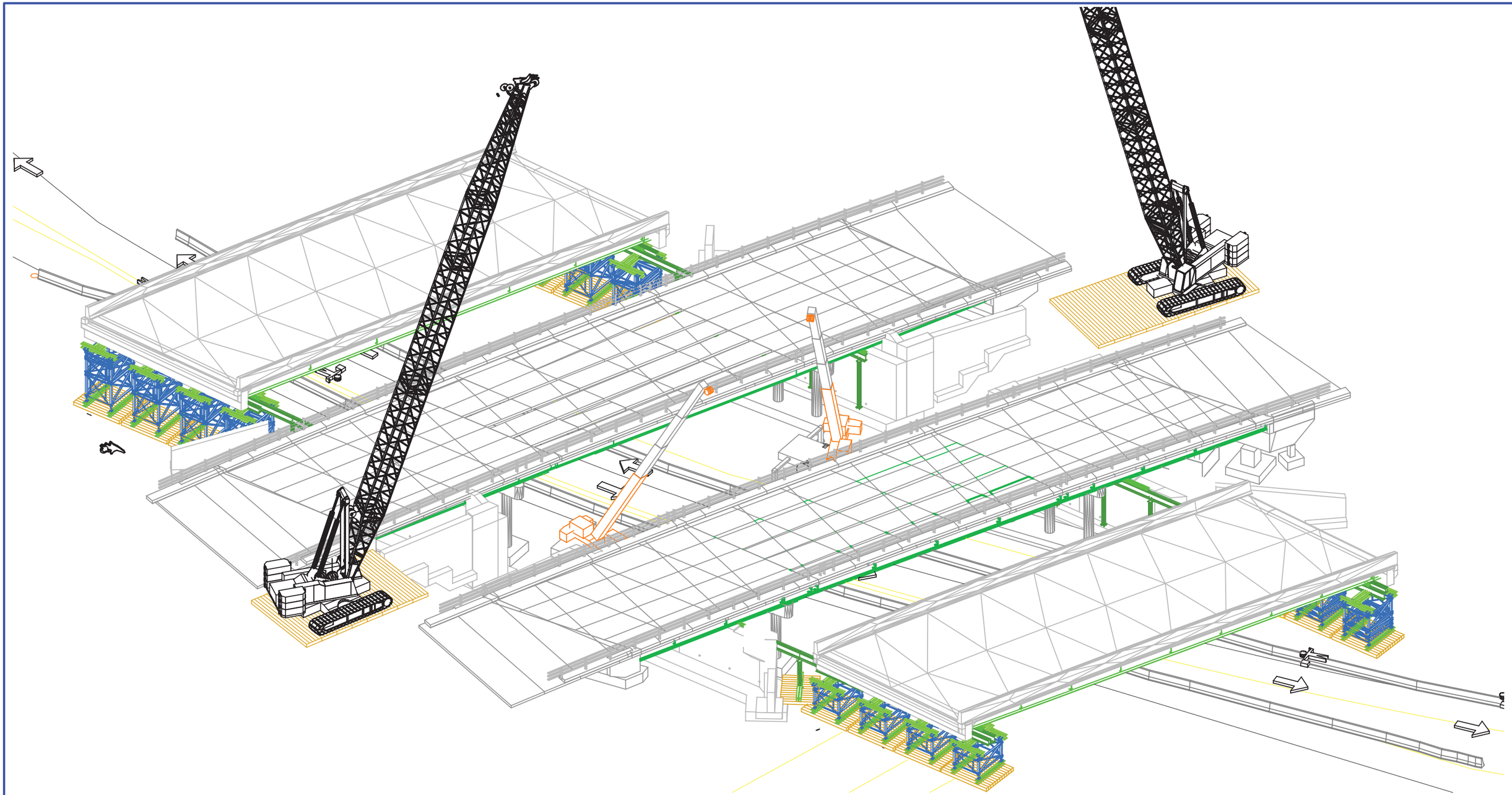

NB DEMOLITION - ISOMETRIC

Revision No. & Date	Vermont Agency of Transportation			Engineer's Seal	Drawing Status		Name	Date	PCL Civil Constructors, Inc. 3810 Northdale Blvd. Suite 200, Tampa Florida 33624 (813)-264-9500 ; Fax: (813)-264-6689	
				STATE OF VERMONT TIMOTHY DAVIS NO. 97183 CIVIL LICENSED PROFESSIONAL ENGINEER	Jul 30 2015 12:54 PM FOR CONSTRUCTION	Drawn By	AJT	06/03/15		
	Road No.	County / City	Financial Project ID No.			Design By	TMD/ AJT	06/03/15	Submittal DEMOLITION PLAN	PCL Project / Job No. I-91 Windsor / Hartford / 5514001
	I-91	Windsor / Hartford	IM 091-2(79)			Check By	TMD	06/30/15	Drawing Title NB DEMO - ISOMETRIC	Sheet No. 20

N:\District Office\Engineering\01 TIG Tampa Active Projects\5514001 - I-91 Hartford\70 Other\71 Demolition\01 CAD Files\Demo_Plan_P.dwg 7/30/2015 8:30 AM

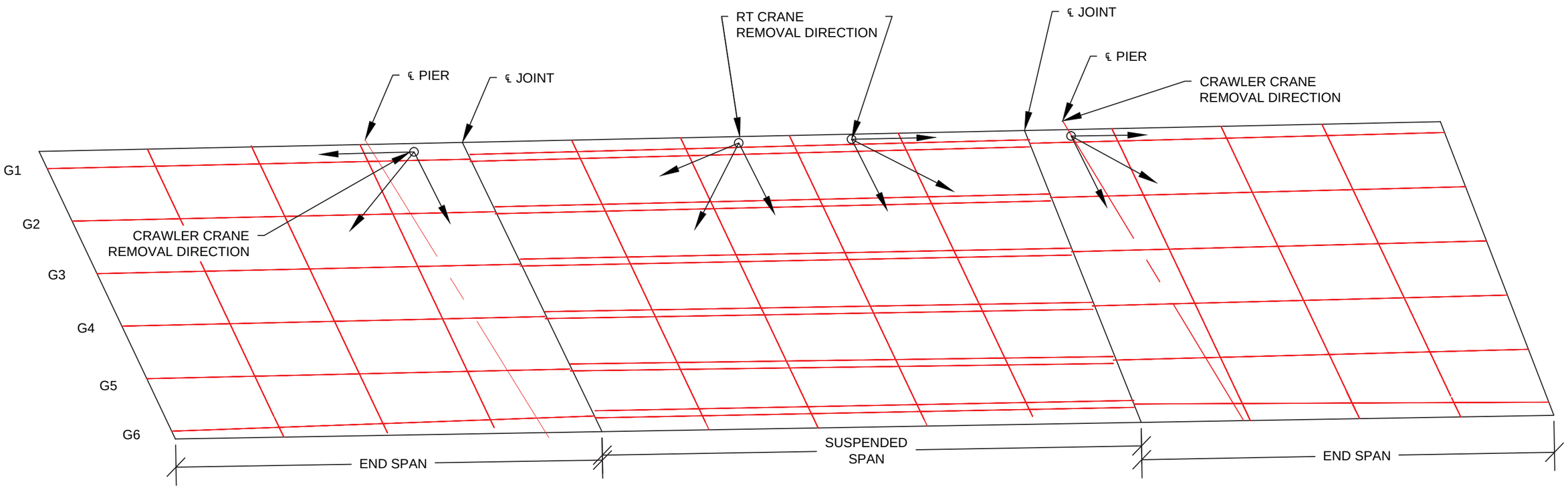

NB DECK PANEL - REMOVAL SEQUENCE

SEQUENCE SUBJECT TO FIELD MODIFICATION UNDER THE
DIRECTION OF THE CONSTRUCTION ENGINEER

Revision No. & Date	Vermont Agency of Transportation			Engineer's Seal	Drawing Status		Name	Date	PCL Civil Constructors, Inc. 3810 Northdale Blvd. Suite 200, Tampa Florida 33624 (813)-264-9500 ; Fax: (813)-264-6689	
				STATE OF VERMONT TIMOTHY DAVIS NO. 97183 CIVIL LICENSED PROFESSIONAL ENGINEER	Jul 30 2015 12:54 PM FOR CONSTRUCTION	Drawn By	AJT	06/03/15		
	Road No.	County / City	Financial Project ID No.			Design By	TMD/ AJT	06/03/15	Submittal DEMOLITION PLAN	PCL Project / Job No. I-91 Windsor / Hartford / 5514001
	I-91	Windsor / Windsor / Hartford	IM 091-2(79)			Check By	TMD	06/30/15	Drawing Title NB SLAB REMOVAL	Sheet No. 21

H:\District Office\Engineering\01 TIG Tampa Active Projects\5514001 -- I-91 Hartford\70 Other\71 Demolition\01 CAD Files\Demo_Plan_P.dwg 7/30/2015 9:30 AM

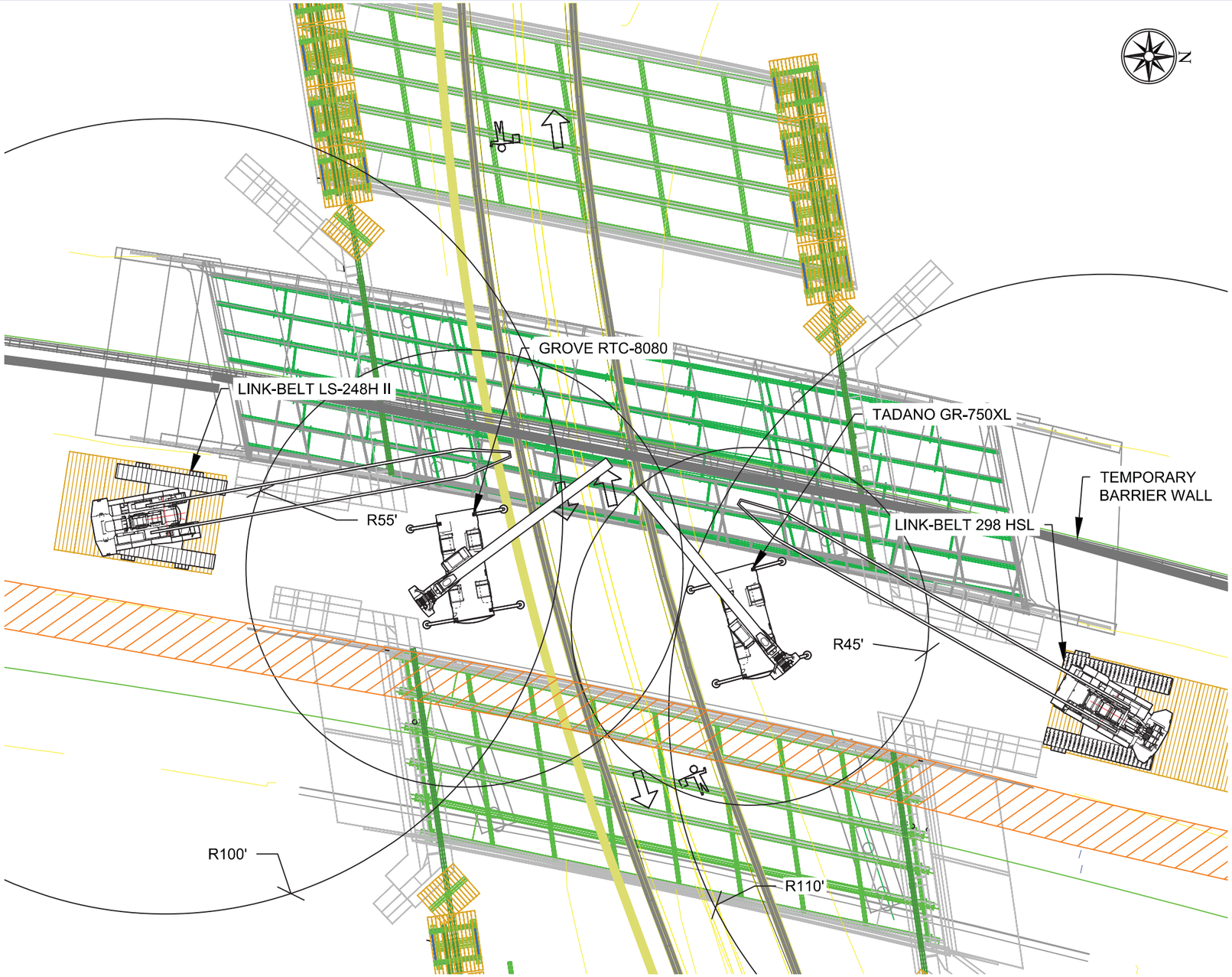

SB DEMOLITION - STAGE 1

PRE-CLOSURE WORK

CRANE INFO:		GROVE RTC-8080	TADANO GR-750XL	LINK BELT LS-248H II	LINK BELT 298 HSL
BOOM LENGTH:	ft	90	88.6, TELE MODE I	120	120
PIECE TYPE		DECK OVERHANG	DECK OVERHANG	DECK OVERHANG	DECK OVERHANG
MAX. PIECE WEIGHT	lbs	14,000	14,000	14,000	14,000
PICK WEIGHT + RIGGING:	lbs	16,330	16,330	22,913	22,913
MAX. CRANE RADIUS:	ft	55	45	100	110
CRANE CAPACITY:	ft	20,400	22,200	31,400	31,700
% OF CHART:		80%	74%	73%	72%

CRANE INFO:		GROVE RTC-8080	TADANO GR-750XL	LINK BELT LS-248H II	LINK BELT 298 HSL
BOOM LENGTH:	ft	90	88.6, TELE MODE I	120	120
PIECE TYPE		DECK SECTION	DECK SECTION	DECK SECTION	DECK SECTION
MAX. PIECE WEIGHT	lbs	12,000	12,000	12,000	12,000
PICK WEIGHT + RIGGING:	lbs	14,330	14,330	20,913	20,913
MAX. CRANE RADIUS:	ft	55	50	110	117
CRANE CAPACITY:	ft	20,400	18,100	27,500	28,900
% OF CHART:		70%	79%	76%	72%

SB DEMOLITION - STAGE 1

1. LAYOUT CORE HOLES AS SHOWN ON SHEETS 02, 04 AND 08 UNDER LANE CLOSURES..
2. CORE DRILL HOLES IN BRIDGE DECK UNDER LANE CLOSURES. FLAG TRAFFIC FOR HOLES IN SUSPENDED SPAN.
3. REMOVE ASPHALT FROM BRIDGE SURFACE UNDER LANE CLOSURES.
4. INSTALL TEMPORARY BARRIER WALL AND SECURE TO BRIDGE DECK PER THE TRAFFIC CONTROL PLAN.
5. LAYOUT SAWCUTS AS SHOWN ON SHEETS 04 AND 03.
6. COMPLETE PLUNGE CUTS IN OVERHANG. FLAG TRAFFIC FOR CUTS IN SUSPENDED SPAN.
7. SET UP NB LEFT LANE CLOSURE FOR STAGING OF DEBRIS REMOVAL TRUCKS. 1
8. REMOVE OVERHANG DECK SECTIONS. FLAG TRAFFIC FOR CUTS IN SUSPENDED SPAN.
   - 8.1. RIG TO SECTION PER RIGGING DETAILS ON SHEET 08.
   - 8.2. REMOVE SLACK FROM RIGGING.
   - 8.3. PERFORM FINAL LONGITUDINAL CUT TO RELEASE PIECE.
9. COMPLETE LONGITUDINAL AND TRANSVERSE CUTS BETWEEN G5 AND G7.
10. AS CUTS IN SECTIONS ARE COMPLETED, RIG TO SLAB SECTION PER DETAIL ON SHEET 08 AND REMOVE.

Revision No. & Date	Vermont Agency of Transportation			Drawing Status		Name	Date	PCL Civil Constructors, Inc. 3810 Northdale Blvd. Suite 200, Tampa Florida 33624 (813)-264-9500 ; Fax: (813)-264-6689	
Rev. 1. 7/30/2015				Jul 30 2015 12:54 PM FOR CONSTRUCTION	Drawn By	AJT	06/03/15		
	Road No.	County / City	Financial Project ID No.		Design By	TMD/ AJT	06/03/15	Submittal DEMOLITION PLAN	PCL Project / Job No. I-91 Windsor / Hartford / 5514001
	I-91	Windsor / Hartford	IM 091-2(79)		Check By	TMD	06/30/15	Drawing Title SB DEMO - STAGE 1	Sheet No. 22

STATE OF VERMONT · TIMOTHY DAVIS · NO. 97183 · CIVIL · LICENSED · PROFESSIONAL ENGINEER

N:\District Office\Engineering\01 TIG Tampa Active Projects\5514001 - I-91 Hartford\70 Other\71 Demolition\01 CAD Files\Demo_Plan_P.dwg 7/30/2015 9:31 AM

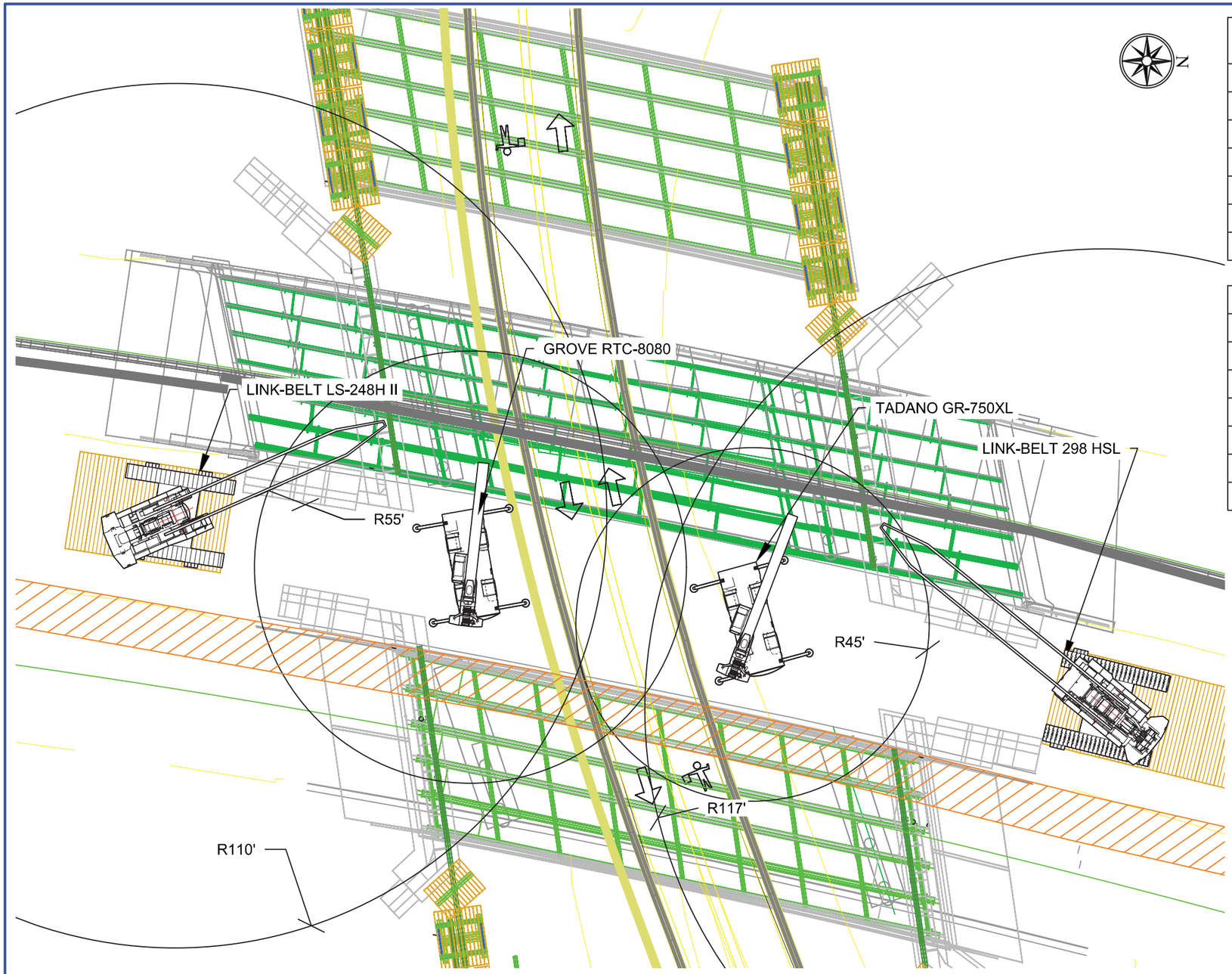

CRANE INFO:		GROVE RTC-8080	TADANO GR-750XL
BOOM LENGTH:	ft	90	88.6, TELE MODE I
PIECE TYPE		SUSPENDED GIRDER	SUSPENDED GIRDER
MAX. PIECE WEIGHT	lbs	25,000	25,000
PICK WEIGHT + RIGGING:	lbs	14,830	14,830
MAX. CRANE RADIUS:	ft	55	45
CRANE CAPACITY:	ft	20,400	22,200
% OF CHART:		73%	67%

CRANE INFO:		LINK BELT LS-248H II	LINK BELT 298 HSL
BOOM LENGTH:	ft	120	120
PIECE TYPE		END SPAN GIRDER	END SPAN GIRDER
MAX. PIECE WEIGHT	lbs	11,700	11,700
PICK WEIGHT + RIGGING:	lbs	20,613	20,613
MAX. CRANE RADIUS:	ft	110	117
CRANE CAPACITY:	ft	27,500	28,900
% OF CHART:		75%	71%

SB DEMOLITION - STAGE 2

1. SET UP FLAGGING OPERATIONS.
2. RIG TO SUSPENDED SPAN G7 AS SHOWN ON SHEET 07. REMOVE SLACK FROM MAIN LINES AND RIGGING.
3. STOP TRAFFIC.
4. TORCH CUT OR UNBOLT DIAPHRAGMS AT LOCATIONS SHOWN ON SHEET 05 AND SET ONTO HAUL TRUCK.
5. RELEASE GIRDER FROM CRANES AND RELEASE TRAFFIC.
6. RIG TO END SPAN GIRDERS PER DETAIL ON SHEET 06. REMOVE SLACK FROM MAIN LINES AND RIGGING.
7. TORCH CUT OR UNBOLT GIRDER AS SHOWN ON SHEET 11 AND DIAPHRAGMS AT LOCATIONS SHOWN ON SHEET 05
8. SET ONTO HAUL TRUCK AND RELEASE GIRDER FROM CRANE.
9. REPEAT STEPS 2-8 FOR G6.

SB DEMOLITION - STAGE 2

PRE-CLOSURE WORK

Revision No. & Date	Vermont Agency of Transportation			Engineer's Seal	Drawing Status		Name	Date	PCL Civil Constructors, Inc. 3810 Northdale Blvd. Suite 200, Tampa Florida 33624 (813)-264-9500 ; Fax: (813)-264-6689	
				STATE OF VERMONT TIMOTHY DAVIS NO. 97183 CIVIL LICENSED PROFESSIONAL ENGINEER	Jul 30 2015 12:54 PM FOR CONSTRUCTION	Drawn By	AJT	06/03/15		
	Road No.	County / City	Financial Project ID No.			Design By	TMD/ AJT	06/03/15	Submittal DEMOLITION PLAN	PCL Project / Job No. I-91 Windsor / Hartford / 5514001
	I-91	Windsor / Hartford	IM 091-2(79)			Check By	TMD	06/30/15	Drawing Title SB DEMO - STAGE 2	Sheet No. 23

N:\District Office\Engineering\01 TIG Tampa Active Projects\5514001 - I-91 Hartford\70 Other\71 Demolition\01 CAD Files\Demo_Plan_P.dwg 7/30/2015 9:32 AM

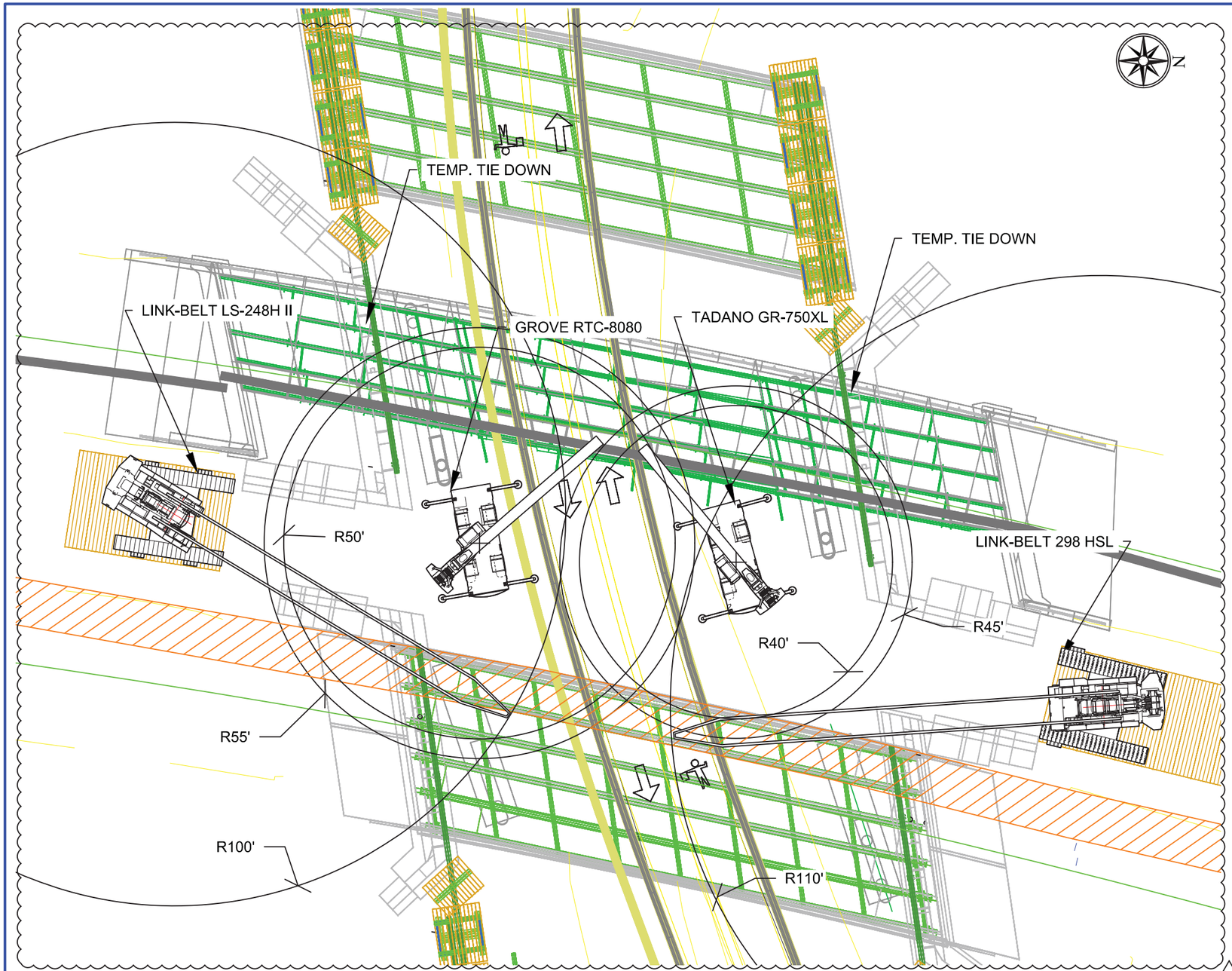

CRANE INFO:		GROVE RTC-8080	TADANO GR-750XL	LINK BELT LS-248H II	LINK BELT 298 HSL
BOOM LENGTH:	ft	90	88.6, TELE MODE I	120	120
PIECE TYPE		DECK OVERHANG	DECK OVERHANG	DECK OVERHANG	DECK OVERHANG
MAX. PIECE WEIGHT	lbs	14,000	14,000	14,000	14,000
PICK WEIGHT + RIGGING:	lbs	16,330	16,330	22,913	22,913
MAX. CRANE RADIUS:	ft	55	45	100	110
CRANE CAPACITY:	ft	20,400	22,200	31,400	31,700
% OF CHART:		80%	74%	73%	72%

CRANE INFO:		GROVE RTC-8080	TADANO GR-750XL	LINK BELT LS-248H II	LINK BELT 298 HSL
BOOM LENGTH:	ft	90	88.6, TELE MODE I	120	120
PIECE TYPE		DECK SECTION	DECK SECTION	DECK SECTION	DECK SECTION
MAX. PIECE WEIGHT	lbs	12,000	12,000	12,000	12,000
PICK WEIGHT + RIGGING:	lbs	14,330	14,330	20,913	20,913
MAX. CRANE RADIUS:	ft	55	50	110	117
CRANE CAPACITY:	ft	20,400	18,100	27,500	28,900
% OF CHART:		70%	79%	76%	72%

SB DEMOLITION - STAGE 3

1. SET UP NB LEFT LANE CLOSURE FOR STAGING OF DEBRIS REMOVAL TRUCKS.
2. REMOVE TEMPORARY BARRIER WALL.
3. COMPLETE LONGITUDINAL AND TRANSVERSE CUTS. FLAG TRAFFIC FOR CUTS IN SUSPENDED SPAN.
4. AS SECTIONS ARE COMPLETELY CUT, RIG TO SLAB SECTION PER DETAIL ON SHEET 08 AND REMOVE.
5. REMOVE ALL DECK SLABS BETWEEN G4 AND G5 FROM THE CENTER OF THE SPAN OUTWARDS. END SPAN SLAB REMOVAL TO BE SEQUENCED SO THAT WEIGHT ON END SPAN PROVIDES A MINIMUM 1.5 FACTOR OF SAFETY AGAINST OVERTURNING IN THE SUSPENDED SPAN. THIS WORK WILL BE DIRECTED ON SITE BY THE CONSTRUCTION ENGINEER.

SB DEMOLITION - STAGE 3

CLOSURE WORK

Revision No. & Date	Vermont Agency of Transportation			Engineer's Seal	Drawing Status		Name	Date	PCL Civil Constructors, Inc. 3810 Northdale Blvd. Suite 200, Tampa Florida 33624 (813)-264-9500 ; Fax: (813)-264-6689	
Rev. 1. 7/30/2015				STATE OF VERMONT TIMOTHY DAVIS NO. 97183 CIVIL LICENSED PROFESSIONAL ENGINEER	Jul 30 2015 12:54 PM FOR CONSTRUCTION	Drawn By	AJT	06/03/15		
	Road No.	County / City	Financial Project ID No.			Design By	TMD/ AJT	06/03/15	Submittal DEMOLITION PLAN	PCL Project / Job No. I-91 Windsor / Hartford / 5514001
	I-91	Windsor / Hartford	IM 091-2(79)			Check By	TMD	06/30/15	Drawing Title SB DEMO - STAGE 3	Sheet No. 24

N:\District Office\Engineering\01 TIG Tampa Active Projects\5514001 – I-91 Hartford\70 Other\71 Demolition\01 CAD Files\Demo_Plan_P.dwg 7/30/2015 9:33 AM

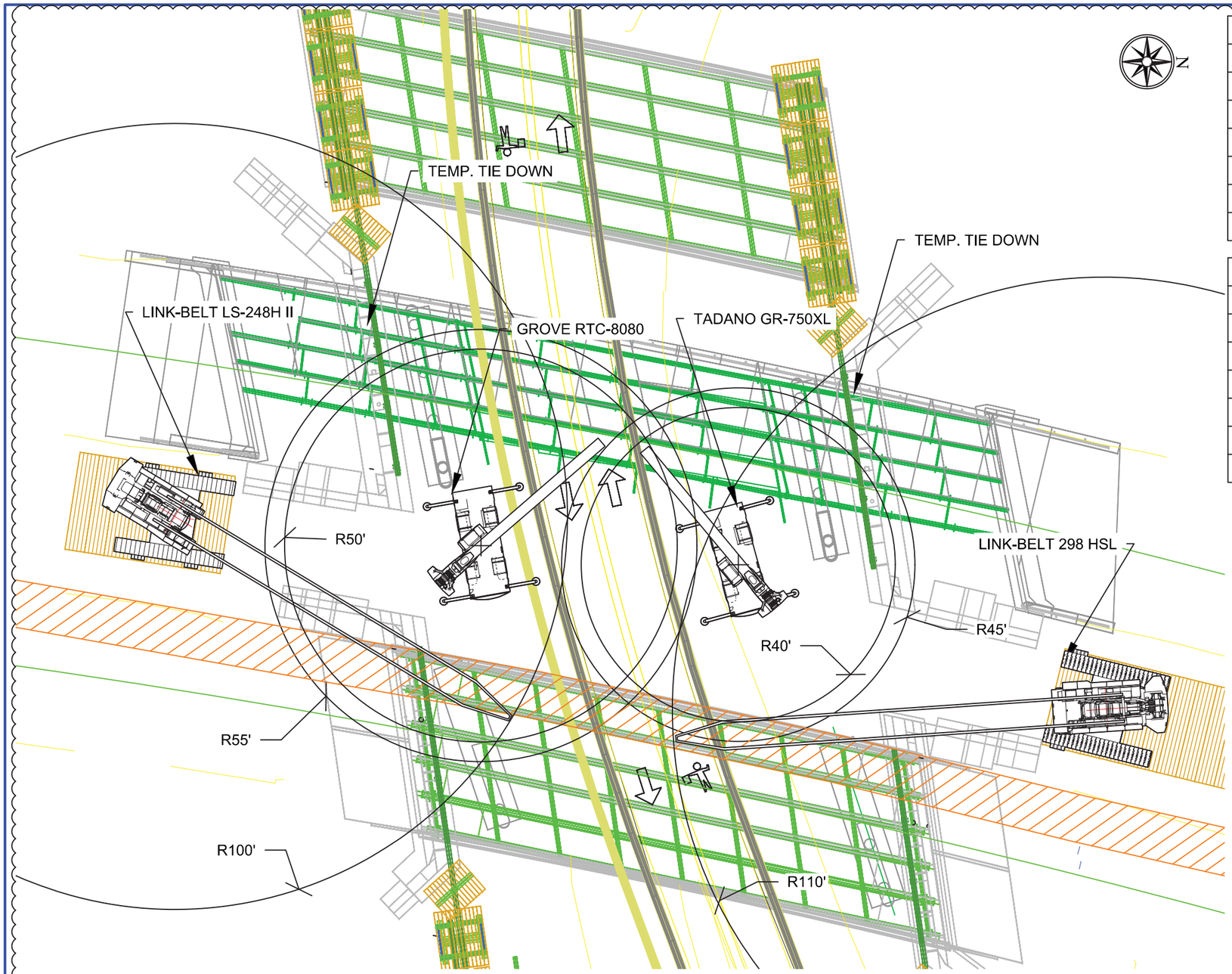

CRANE INFO:		GROVE RTC-8080	TADANO GR-750XL
BOOM LENGTH:	ft	90	88.6, TELE MODE I
PIECE TYPE		CAP SECTION	CAP SECTION
MAX. PIECE WEIGHT	lbs	23,000	23,000
PICK WEIGHT + RIGGING:	lbs	25,330	25,330
MAX. CRANE RADIUS:	ft	40	35
CRANE CAPACITY:	ft	35,800	34,700
% OF CHART:		71%	73%

CRANE INFO:		GROVE RTC-8080	TADANO GR-750XL
BOOM LENGTH:	ft	90	88.6, TELE MODE I
PIECE TYPE		COLUMN	COLUMN
MAX. PIECE WEIGHT	lbs	16,000	16,000
PICK WEIGHT + RIGGING:	lbs	18,330	18,330
MAX. CRANE RADIUS:	ft	55	40
CRANE CAPACITY:	ft	20,400	27,700
% OF CHART:		90%	66%

SB DEMOLITION - STAGE 3 (CON'T)

1. VERTICALLY CUT PIER CAP AT LOCATIONS SHOWN ON SHEET 12.
2. RIG TO EXTERIOR SECTION OF PIER CAP. (SEE DETAIL SHEET 08) REMOVE SLACK FROM RIGGING.
3. HORIZONTALLY CUT PIER CAP AT TOP OF EXTERIOR COLUMN AS SHOWN ON SHEET 12.
4. REMOVE CAP SECTION, FLAGGING TRAFFIC AS NECESSARY.
5. REPEAT STEPS 2-4 FOR INTERIOR SECTION OF PIER CAP.
6. CHOKE TOP OF COLUMN AS SHOWN ON SHEET 08.
7. SAWCUT OR CHIP BOTTOM OF COLUMN. USE CRANE TO STABILIZE TOP OF COLUMN AS CUT IS MADE.
8. USE CRANE TO LAYOVER COLUMN ONTO FOOTING. DO NOT PICK ENTIRE COLUMN WITH RIGGING. CUT OR CHIP COLUMN ON GROUND FOR REMOVAL FROM SITE.

SB DEMOLITION - STAGE 3

CLOSURE WORK

1

Revision No. & Date	Vermont Agency of Transportation			Engineer's Seal	Drawing Status		Name	Date	PCL Civil Constructors, Inc. 3810 Northdale Blvd. Suite 200, Tampa Florida 33624 (813)-264-9500 ; Fax: (813)-264-6689	
Rev. 1. 7/30/2015				STATE OF VERMONT TIMOTHY DAVIS NO. 97183 CIVIL LICENSED PROFESSIONAL ENGINEER	Jul 30 2015 12:55 PM FOR CONSTRUCTION	Drawn By	AJT	06/03/15		
	Road No.	County / City	Financial Project ID No.			Design By	TMD/ AJT	06/03/15	Submittal DEMOLITION PLAN	PCL Project / Job No. I-91 Windsor / Hartford / 5514001
	I-91	Windsor / Hartford	IM 091-2(79)			Check By	TMD	06/30/15	Drawing Title SB DEMO - STAGE 3 (1)	Sheet No. 24A

N:\District Office\Engineering\01 TIG Tampa Active Projects\5514001 – I-91 Hartford\70 Other\71 Demolition\01 CAD Files\Demo_Plan_P.dwg 7/30/2015 9:33 AM

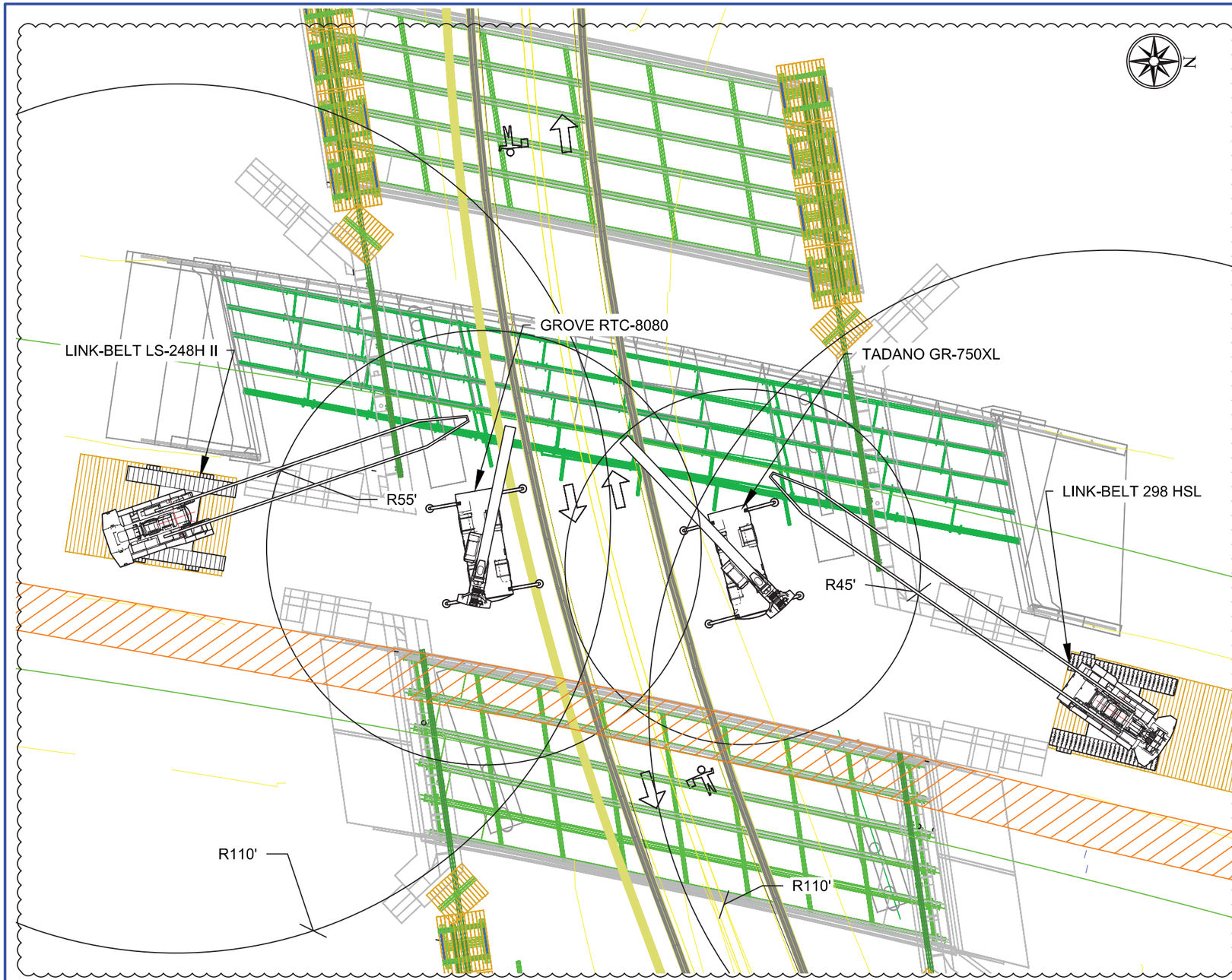

1

SB DEMOLITION - STAGE 4

CLOSURE WORK

CRANE INFO:		GROVE RTC-8080	TADANO GR-750XL
BOOM LENGTH:	ft	90	88.6, TELE MODE I
PIECE TYPE		SUSPENDED GIRDER	SUSPENDED GIRDER
MAX. PIECE WEIGHT	lbs	25,000	25,000
PICK WEIGHT + RIGGING:	lbs	14,830	14,830
MAX. CRANE RADIUS:	ft	55	45
CRANE CAPACITY:	ft	20,400	22,200
% OF CHART:		73%	67%

CRANE INFO:		LINK BELT LS-248H II	LINK BELT 298 HSL
BOOM LENGTH:	ft	120	120
PIECE TYPE		END SPAN GIRDER	END SPAN GIRDER
MAX. PIECE WEIGHT	lbs	11,700	11,700
PICK WEIGHT + RIGGING:	lbs	20,613	20,613
MAX. CRANE RADIUS:	ft	110	117
CRANE CAPACITY:	ft	27,500	28,900
% OF CHART:		75%	71%

SB DEMOLITION - STAGE 4

1. RIG TO SUSPENDED SPAN G5 AS SHOWN ON SHEET 07. REMOVE SLACK FROM MAIN LINES AND RIGGING.
2. STOP TRAFFIC.
3. TORCH CUT OR UNBOLT DIAPHRAGMS AT LOCATIONS SHOWN ON SHEET 05 AND SET ONTO HAUL TRUCK.
4. RELEASE GIRDER FROM CRANES AND RELEASE TRAFFIC.
5. RIG TO END SPAN GIRDERS PER DETAIL ON SHEET 06. REMOVE SLACK FROM MAIN LINES AND RIGGING.
6. TORCH CUT OR UNBOLT GIRDER AS SHOWN ON SHEET 11 AND DIAPHRAGMS AT LOCATIONS SHOWN ON SHEET 05
7. SET ONTO HAUL TRUCK AND RELEASE GIRDER FROM CRANE.

Revision No. & Date	Vermont Agency of Transportation			Engineer's Seal	Drawing Status		Name	Date	PCL Civil Constructors, Inc. 3810 Northdale Blvd. Suite 200, Tampa Florida 33624 (813)-264-9500 ; Fax: (813)-264-6689	
Rev. 1. 7/30/2015				STATE OF VERMONT TIMOTHY DAVIS NO. 97183 CIVIL LICENSED PROFESSIONAL ENGINEER	Jul 30 2015 12:55 PM FOR CONSTRUCTION	Drawn By	AJT	06/03/15		
	Road No.	County / City	Financial Project ID No.			Design By	TMD/ AJT	06/03/15	Submittal DEMOLITION PLAN	PCL Project / Job No. I-91 Windsor / Hartford / 5514001
	I-91	Windsor / Hartford	IM 091-2(79)			Check By	TMD	06/30/15	Drawing Title SB DEMO - STAGE 4	Sheet No. 25

N:\District Office\Engineering\01 TIG Tampa Active Projects\5514001 - I-91 Hartford\70 Other\71 Demolition\01 CAD Files\Demo_Plan_P.dwg 7/30/2015 8:34 AM

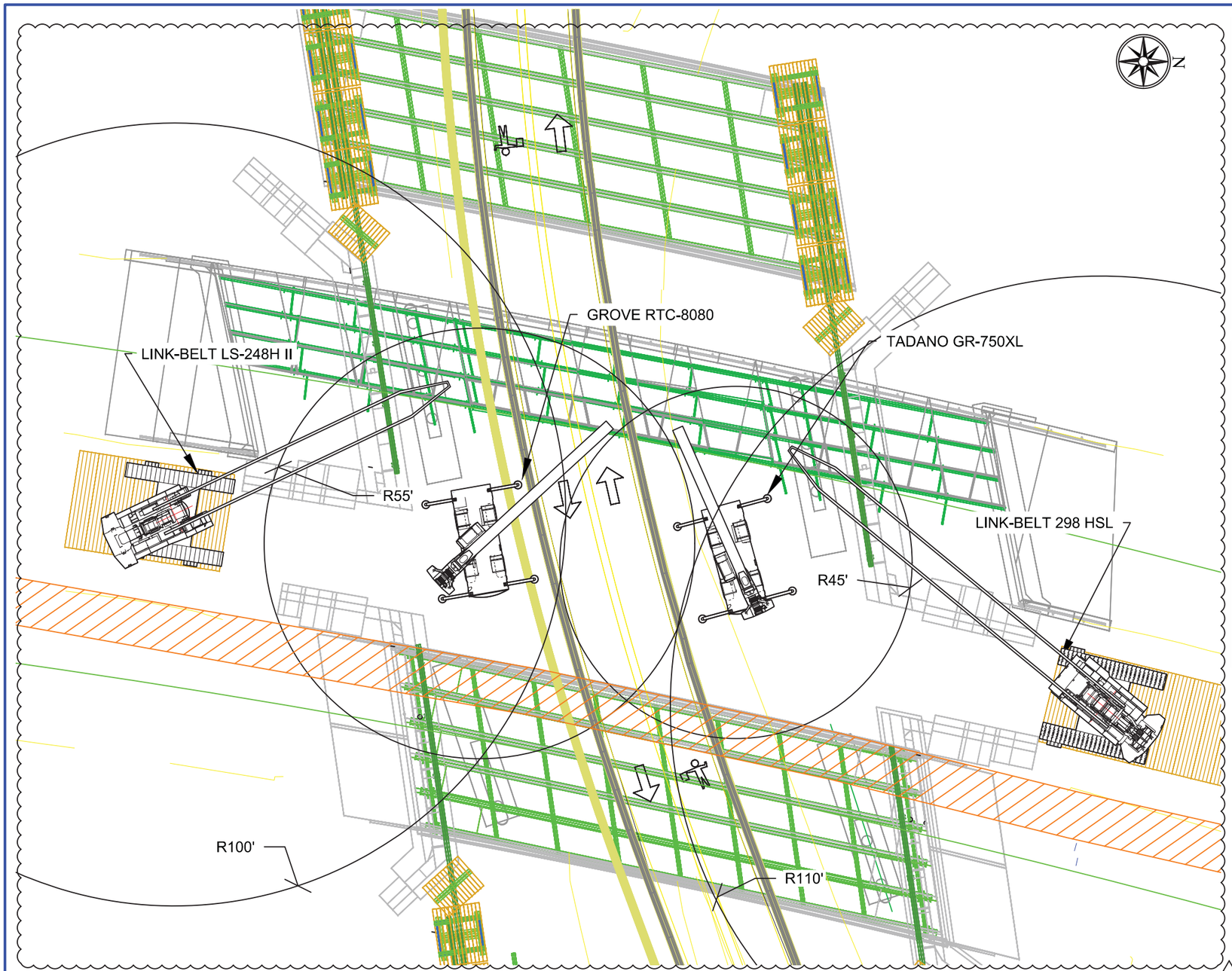

SB DEMOLITION - STAGE 5

CLOSURE WORK

CRANE INFO:		GROVE RTC-8080	TADANO GR-750XL	LINK BELT LS-248H II	LINK BELT 298 HSL
BOOM LENGTH:	ft	90	88.6, TELE MODE I	120	120
PIECE TYPE		DECK OVERHANG	DECK OVERHANG	DECK OVERHANG	DECK OVERHANG
MAX. PIECE WEIGHT	lbs	14,000	14,000	14,000	14,000
PICK WEIGHT + RIGGING:	lbs	16,330	16,330	22,913	22,913
MAX. CRANE RADIUS:	ft	55	45	100	110
CRANE CAPACITY:	ft	20,400	22,200	31,400	31,700
% OF CHART:		80%	74%	73%	72%

CRANE INFO:		GROVE RTC-8080	TADANO GR-750XL	LINK BELT LS-248H II	LINK BELT 298 HSL
BOOM LENGTH:	ft	90	88.6, TELE MODE I	120	120
PIECE TYPE		DECK SECTION	DECK SECTION	DECK SECTION	DECK SECTION
MAX. PIECE WEIGHT	lbs	12,000	12,000	12,000	12,000
PICK WEIGHT + RIGGING:	lbs	14,330	14,330	20,913	20,913
MAX. CRANE RADIUS:	ft	55	50	110	117
CRANE CAPACITY:	ft	20,400	18,100	27,500	28,900
% OF CHART:		70%	79%	76%	72%

SB DEMOLITION - STAGE 5

1. COMPLETE LONGITUDINAL AND TRANSVERSE CUTS BETWEEN G3 AND G4. FLAG TRAFFIC FOR CUTS IN SUSPENDED SPAN.
2. AS SECTIONS ARE COMPLETELY CUT, RIG TO SLAB SECTION PER DETAIL ON SHEET 08 AND REMOVE.
3. REMOVE ALL DECK SLABS BETWEEN G3 AND G4 FROM THE CENTER OF THE SPAN OUTWARDS. END SPAN SLAB REMOVAL TO BE SEQUENCED SO THAT WEIGHT ON END SPAN PROVIDES A MINIMUM 1.5 FACTOR OF SAFETY AGAINST OVERTURNING IN THE SUSPENDED SPAN. THIS WORK WILL BE DIRECTED ON SITE BY THE CONSTRUCTION ENGINEER.

Revision No. & Date	Vermont Agency of Transportation			Engineer's Seal	Drawing Status		Name	Date	PCL Civil Constructors, Inc. 3810 Northdale Blvd. Suite 200, Tampa Florida 33624 (813)-264-9500 ; Fax: (813)-264-6689	
Rev. 1. 7/30/2015				STATE OF VERMONT TIMOTHY DAVIS NO. 97183 CIVIL LICENSED PROFESSIONAL ENGINEER	Jul 30 2015 12:55 PM FOR CONSTRUCTION	Drawn By	AJT	06/03/15		
	Road No.	County / City	Financial Project ID No.			Design By	TMD/ AJT	06/03/15	Submittal DEMOLITION PLAN	PCL Project / Job No. I-91 Windsor / Hartford / 5514001
	I-91	Windsor / Hartford	IM 091-2(79)			Check By	TMD	06/30/15	Drawing Title SB DEMO - STAGE 5	Sheet No. 26

N:\District Office\Engineering\01 TIG Tampa Active Projects\5514001 – I-91 Hartford\70 Other\71 Demolition\01 CAD Files\Demo_Plan_P.dwg 7/30/2015 9:35 AM

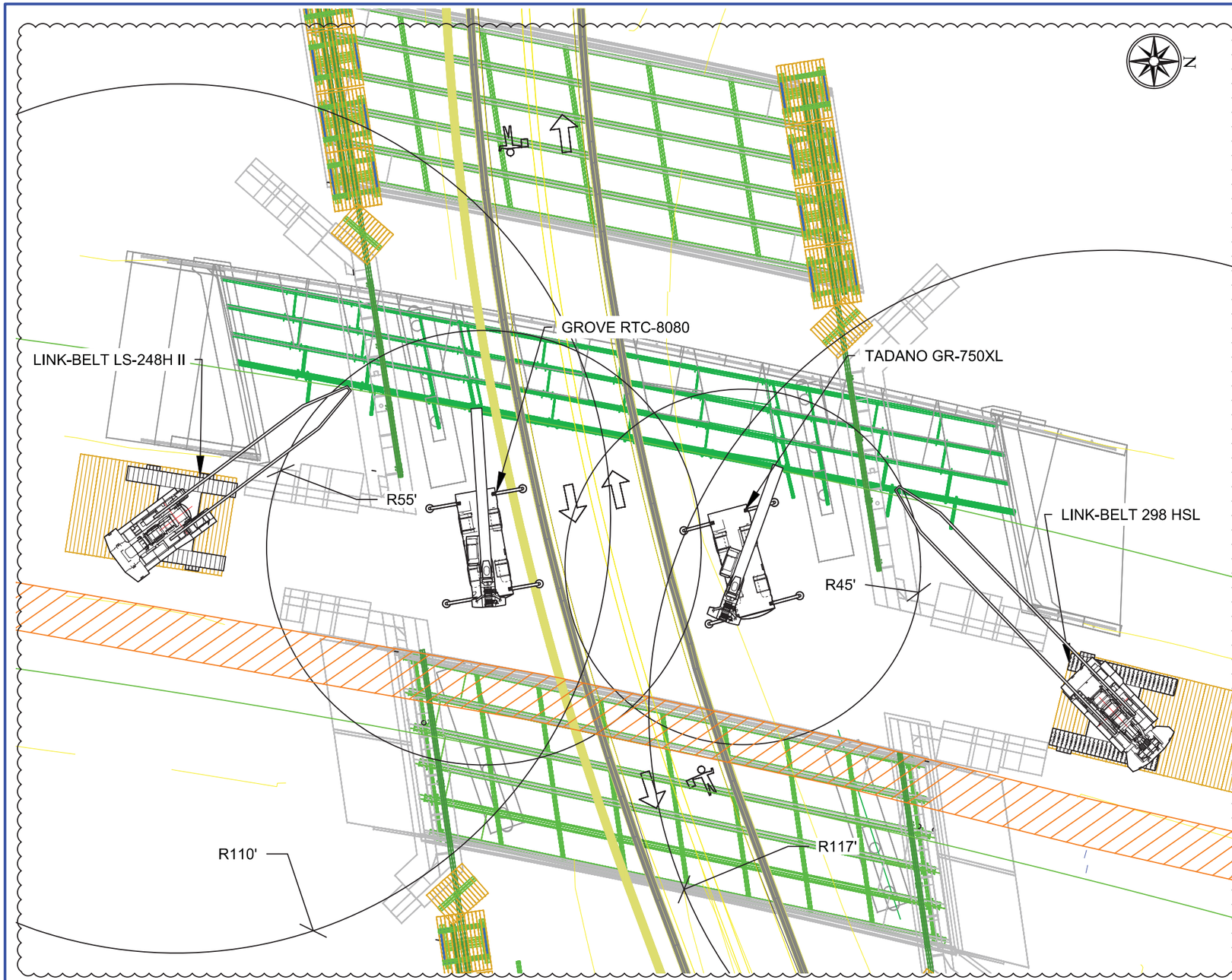

SB DEMOLITION - STAGE 6

CLOSURE WORK

CRANE INFO:		GROVE RTC-8080	TADANO GR-750XL
BOOM LENGTH:	ft	90	88.6, TELE MODE I
PIECE TYPE		SUSPENDED GIRDER	SUSPENDED GIRDER
MAX. PIECE WEIGHT	lbs	25,000	25,000
PICK WEIGHT + RIGGING:	lbs	14,830	14,830
MAX. CRANE RADIUS:	ft	55	45
CRANE CAPACITY:	ft	20,400	22,200
% OF CHART:		73%	67%

CRANE INFO:		LINK BELT LS-248H II	LINK BELT 298 HSL
BOOM LENGTH:	ft	120	120
PIECE TYPE		END SPAN GIRDER	END SPAN GIRDER
MAX. PIECE WEIGHT	lbs	11,700	11,700
PICK WEIGHT + RIGGING:	lbs	20,613	20,613
MAX. CRANE RADIUS:	ft	110	117
CRANE CAPACITY:	ft	27,500	28,900
% OF CHART:		75%	71%

SB DEMOLITION - STAGE 6

1. RIG TO SUSPENDED SPAN G4 AS SHOWN ON SHEET 07. REMOVE SLACK FROM MAIN LINES AND RIGGING.
2. STOP TRAFFIC.
3. TORCH CUT OR UNBOLT DIAPHRAGMS AT LOCATIONS SHOWN ON SHEET 05 AND SET ONTO HAUL TRUCK.
4. RELEASE GIRDER FROM CRANES AND RELEASE TRAFFIC.
5. RIG TO END SPAN GIRDERS PER DETAIL ON SHEET 06. REMOVE SLACK FROM MAIN LINES AND RIGGING.
6. TORCH CUT OR UNBOLT GIRDER AS SHOWN ON SHEET 11 AND DIAPHRAGMS AT LOCATIONS SHOWN ON SHEET 05
7. SET ONTO HAUL TRUCK AND RELEASE GIRDER FROM CRANE.

Revision No. & Date	Vermont Agency of Transportation			Engineer's Seal	Drawing Status		Name	Date	PCL Civil Constructors, Inc. 3810 Northdale Blvd. Suite 200, Tampa Florida 33624 (813)-264-9500 ; Fax: (813)-264-6689	
Rev. 1. 7/30/2015				STATE OF VERMONT TIMOTHY DAVIS NO. 97183 CIVIL LICENSED PROFESSIONAL ENGINEER	Jul 30 2015 12:55 PM FOR CONSTRUCTION	Drawn By	AJT	06/03/15		
	Road No.	County / City	Financial Project ID No.			Design By	TMD/ AJT	06/03/15	Submittal DEMOLITION PLAN	PCL Project / Job No. I-91 Windsor / Hartford / 5514001
	I-91	Windsor / Hartford	IM 091-2(79)			Check By	TMD	06/30/15	Drawing Title SB DEMO - STAGE 6	Sheet No. 27

N:\District Office\Engineering\01 TIG Tampa Active Projects\5514001 - I-91 Hartford\70 Other\71 Demolition\01 CAD Files\Demo_Plan_P.dwg 7/30/2015 8:38 AM

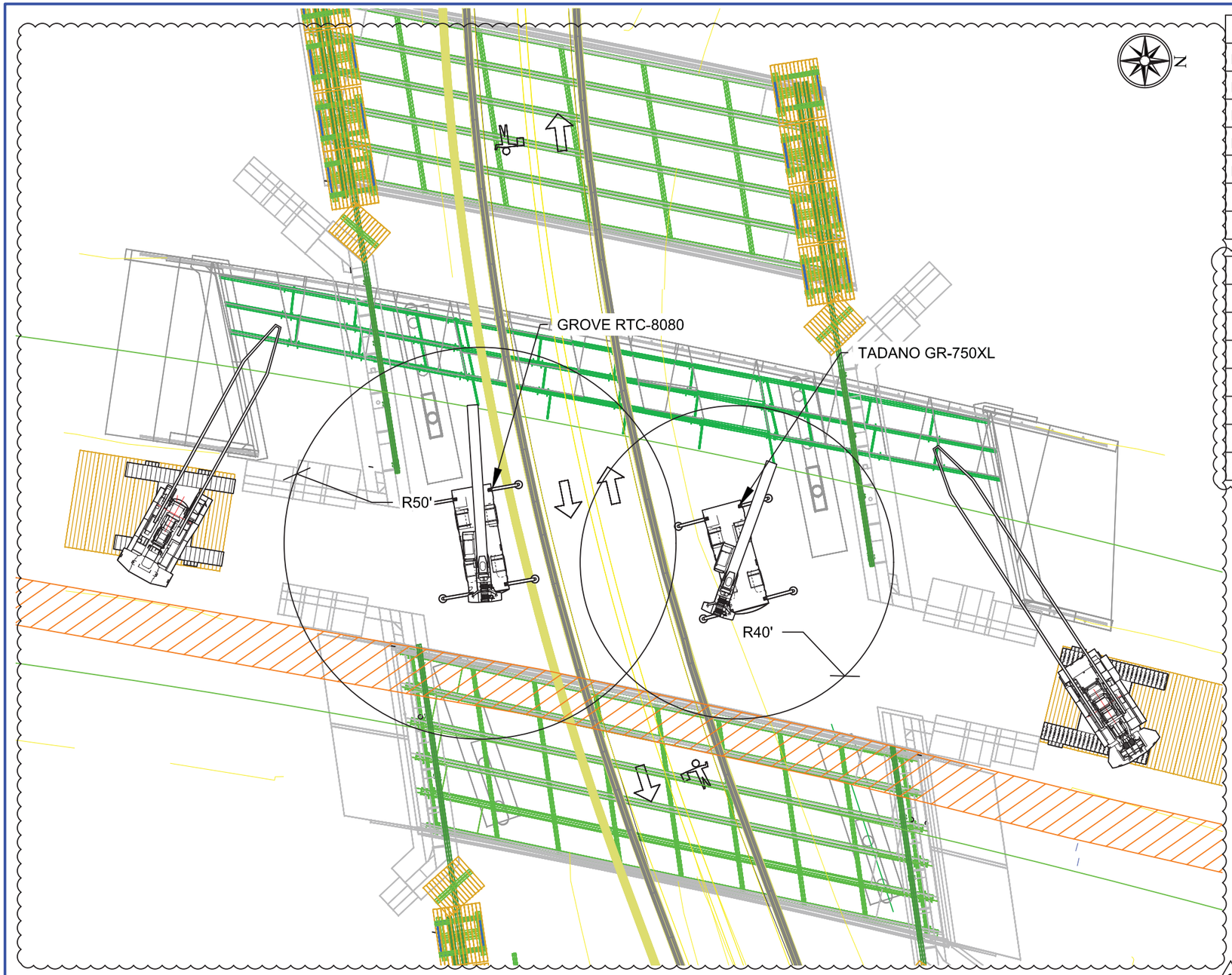

SB DEMOLITION - STAGE 7

CLOSURE WORK

CRANE INFO:		GROVE RTC-8080	TADANO GR-750XL
BOOM LENGTH:	ft	90	88.6, TELE MODE I
PIECE TYPE		CAP SECTION	CAP SECTION
MAX. PIECE WEIGHT	lbs	23,000	23,000
PICK WEIGHT + RIGGING:	lbs	25,330	25,330
MAX. CRANE RADIUS:	ft	40	35
CRANE CAPACITY:	ft	35,800	34,700
% OF CHART:		71%	73%

CRANE INFO:		GROVE RTC-8080	TADANO GR-750XL
BOOM LENGTH:	ft	90	88.6, TELE MODE I
PIECE TYPE		COLUMN	COLUMN
MAX. PIECE WEIGHT	lbs	16,000	16,000
PICK WEIGHT + RIGGING:	lbs	18,330	18,330
MAX. CRANE RADIUS:	ft	55	40
CRANE CAPACITY:	ft	20,400	27,700
% OF CHART:		90%	66%

1

SB DEMOLITION - STAGE 7

1. VERTICALLY CUT PIER CAP AT LOCATIONS SHOWN ON SHEET 12.
2. RIG TO EXTERIOR SECTION OF PIER CAP. (SEE DETAIL SHEET 08) REMOVE SLACK FROM RIGGING.
3. HORIZONTALLY CUT PIER CAP AT TOP OF EXTERIOR COLUMN AS SHOWN ON SHEET 12.
4. REMOVE CAP SECTION, FLAGGING TRAFFIC AS NECESSARY.
5. REPEAT STEPS 2-4 FOR INTERIOR SECTION OF PIER CAP.
6. CHOKE TOP OF COLUMN AS SHOWN ON SHEET 08.
7. SAWCUT OR CHIP BOTTOM OF COLUMN. USE CRANE TO STABILIZE TOP OF COLUMN AS CUT IS MADE.
8. USE CRANE TO LAYOVER COLUMN ONTO FOOTING. DO NOT PICK ENTIRE COLUMN WITH RIGGING. CUT OR CHIP COLUMN ON GROUND FOR REMOVAL FROM SITE.

Revision No. & Date	Vermont Agency of Transportation			Engineer's Seal	Drawing Status		Name	Date	PCL Civil Constructors, Inc. 3810 Northdale Blvd. Suite 200, Tampa Florida 33624 (813)-264-9500 ; Fax: (813)-264-6689	
Rev. 1. 7/30/2015				STATE OF VERMONT TIMOTHY DAVIS NO. 97183 CIVIL LICENSED PROFESSIONAL ENGINEER	Jul 30 2015 12:55 PM FOR CONSTRUCTION	Drawn By	AJT	06/03/15		
	Road No.	County / City	Financial Project ID No.			Design By	TMD/ AJT	06/03/15	Submittal DEMOLITION PLAN	PCL Project / Job No. I-91 Windsor / Hartford / 5514001
	I-91	Windsor / Hartford	IM 091-2(79)			Check By	TMD	06/30/15	Drawing Title SB DEMO - STAGE 7	Sheet No. 28

N:\District Office\Engineering\01 TIG Tampa Active Projects\5514001 - I-91 Hartford\70 Other\71 Demolition\01 CAD Files\Demo_Plan_P.dwg 7/30/2015 9:39 AM

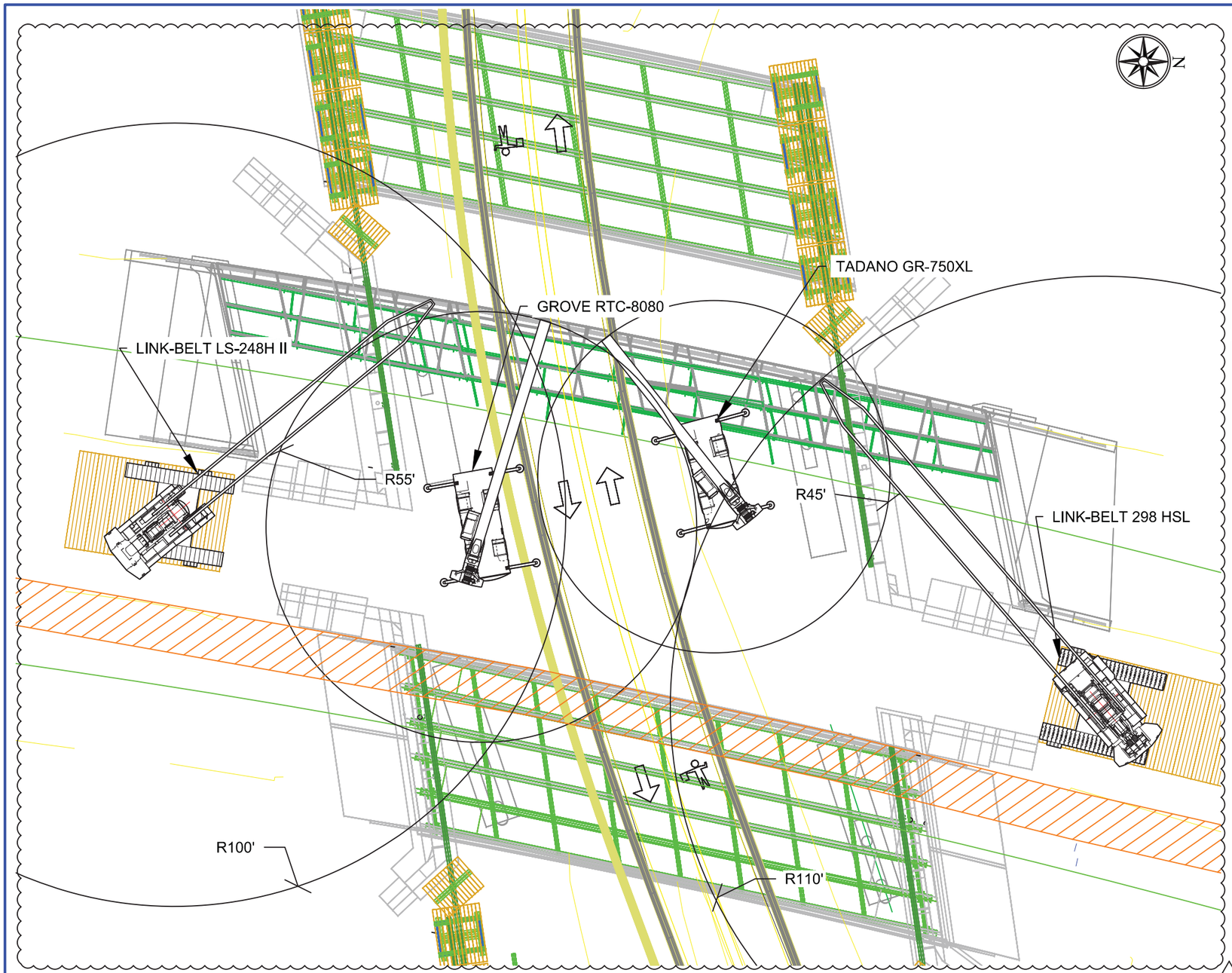

SB DEMOLITION - STAGE 8

CLOSURE WORK

CRANE INFO:		GROVE RTC-8080	TADANO GR-750XL	LINK BELT LS-248H II	LINK BELT 298 HSL
BOOM LENGTH:	ft	90	88.6, TELE MODE I	120	120
PIECE TYPE		DECK OVERHANG	DECK OVERHANG	DECK OVERHANG	DECK OVERHANG
MAX. PIECE WEIGHT	lbs	14,000	14,000	14,000	14,000
PICK WEIGHT + RIGGING:	lbs	16,330	16,330	22,913	22,913
MAX. CRANE RADIUS:	ft	55	45	100	110
CRANE CAPACITY:	ft	20,400	22,200	31,400	31,700
% OF CHART:		80%	74%	73%	72%

CRANE INFO:		GROVE RTC-8080	TADANO GR-750XL	LINK BELT LS-248H II	LINK BELT 298 HSL
BOOM LENGTH:	ft	90	88.6, TELE MODE I	120	120
PIECE TYPE		DECK SECTION	DECK SECTION	DECK SECTION	DECK SECTION
MAX. PIECE WEIGHT	lbs	12,000	12,000	12,000	12,000
PICK WEIGHT + RIGGING:	lbs	14,330	14,330	20,913	20,913
MAX. CRANE RADIUS:	ft	55	50	110	117
CRANE CAPACITY:	ft	20,400	18,100	27,500	28,900
% OF CHART:		70%	79%	76%	72%

SB DEMOLITION - STAGE 8

1. COMPLETE PLUNGE CUTS IN OVERHANG. FLAG TRAFFIC FOR CUTS IN SUSPENDED SPAN.
2. REMOVE OVERHANG DECK SECTIONS. FLAG TRAFFIC FOR CUTS IN SUSPENDED SPAN.
   - 2.1. RIG TO SECTION PER RIGGING DETAILS ON SHEET 08.
   - 2.2. REMOVE SLACK FROM RIGGING.
   - 2.3. PERFORM FINAL LONGITUDINAL CUT TO RELEASE PIECE.
3. COMPLETE ANY REMAINING TRANSVERSE CUTS BETWEEN G1 AND G3.
4. AS CUTS IN SECTIONS ARE COMPLETED, RIG TO SLAB SECTION PER DETAIL ON SHEET 08 AND REMOVE.
5. REMOVE ALL DECK SLABS BETWEEN G1 AND G3 FROM THE CENTER OF THE SPAN OUTWARDS. REMOVE EXTERIOR OVERHANG SECTIONS BEFORE REMOVING INTERIOR SLAB SECTIONS. END SPAN SLAB REMOVAL TO BE SEQUENCED SO THAT WEIGHT ON END SPAN PROVIDES A MINIMUM 1.5 FACTOR OF SAFETY AGAINST OVERTURNING IN THE SUSPENDED SPAN. THIS WORK WILL BE DIRECTED ON SITE BY THE CONSTRUCTION ENGINEER.

Revision No. & Date	Vermont Agency of Transportation			Engineer's Seal	Drawing Status		Name	Date	PCL Civil Constructors, Inc. 3810 Northdale Blvd. Suite 200, Tampa Florida 33624 (813)-264-9500 ; Fax: (813)-264-6689	
Rev. 1. 7/30/2015				STATE OF VERMONT TIMOTHY DAVIS NO. 97183 CIVIL LICENSED PROFESSIONAL ENGINEER	Jul 30 2015 12:55 PM FOR CONSTRUCTION	Drawn By	AJT	06/03/15		
	Road No.	County / City	Financial Project ID No.			Design By	TMD/ AJT	06/03/15	Submittal DEMOLITION PLAN	PCL Project / Job No. I-91 Windsor / Hartford / 5514001
	I-91	Windsor / Hartford	IM 091-2(79)			Check By	TMD	06/30/15	Drawing Title SB DEMO - STAGE 8	Sheet No. 29

H:\District Office\Engineering\01 TIG Tampa Active Projects\5514001 - I-91 Hartford\70 Other\71 Demolition\01 CAD Files\Demo_Plan_P.dwg 7/30/2015 9:37 AM

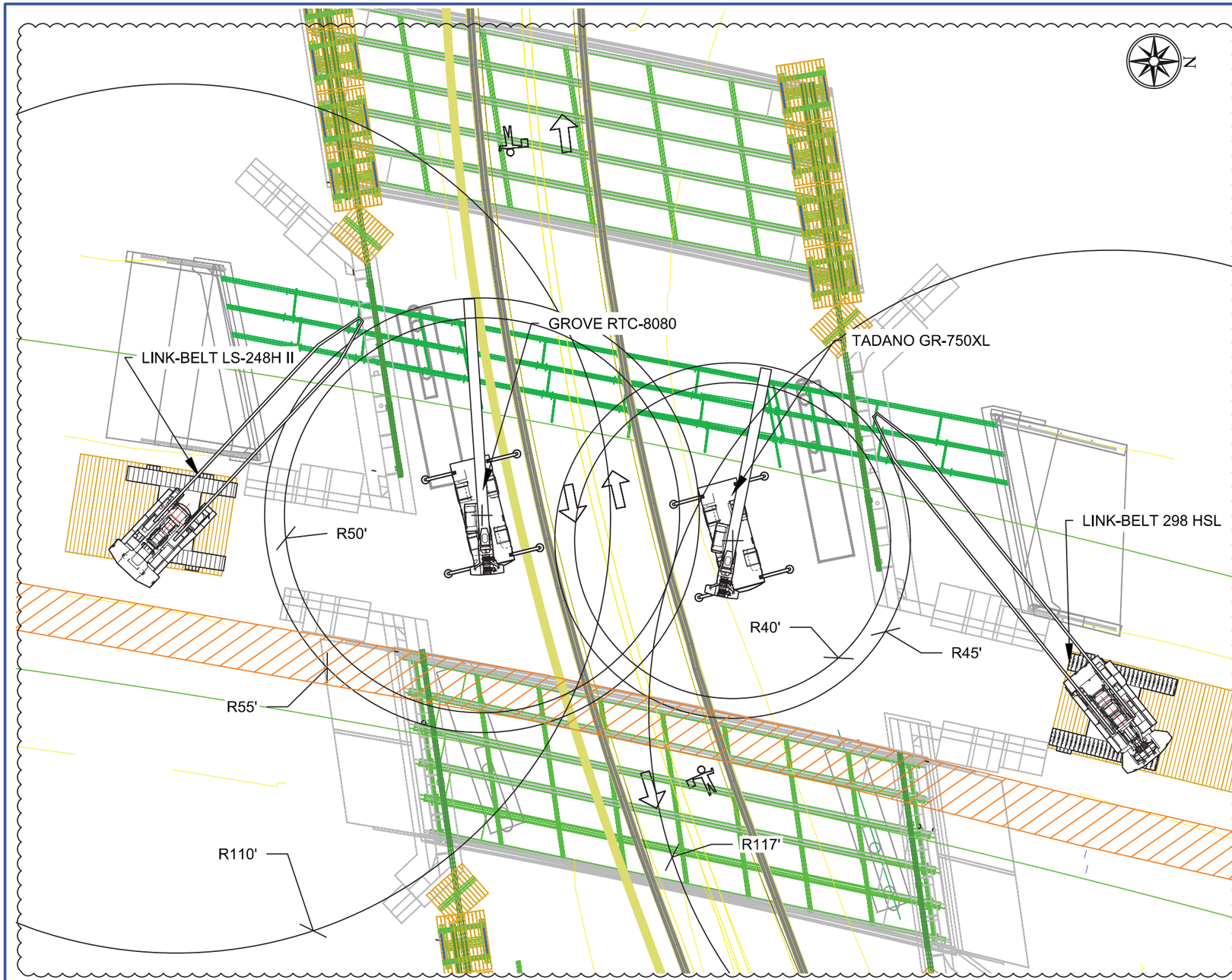

1

SB DEMOLITION - STAGE 9

CLOSURE WORK

CRANE INFO:		GROVE RTC-8080	TADANO GR-750XL
BOOM LENGTH:	ft	90	88.6, TELE MODE I
PIECE TYPE		SUSPENDED GIRDER	SUSPENDED GIRDER
MAX. PIECE WEIGHT	lbs	25,000	25,000
PICK WEIGHT + RIGGING:	lbs	14,830	14,830
MAX. CRANE RADIUS:	ft	55	45
CRANE CAPACITY:	ft	20,400	22,200
% OF CHART:		73%	67%

CRANE INFO:		LINK BELT LS-248H II	LINK BELT 298 HSL
BOOM LENGTH:	ft	120	120
PIECE TYPE		END SPAN GIRDER	END SPAN GIRDER
MAX. PIECE WEIGHT	lbs	11,700	11,700
PICK WEIGHT + RIGGING:	lbs	20,613	20,613
MAX. CRANE RADIUS:	ft	110	117
CRANE CAPACITY:	ft	27,500	28,900
% OF CHART:		75%	71%

SB DEMOLITION - STAGE 9

1. RIG TO SUSPENDED SPAN G3 AS SHOWN ON SHEET 07. REMOVE SLACK FROM MAIN LINES AND RIGGING.
2. STOP TRAFFIC.
3. TORCH CUT OR UNBOLT DIAPHRAGMS AT LOCATIONS SHOWN ON SHEET 05 AND SET ONTO HAUL TRUCK.
4. RELEASE GIRDER FROM CRANES AND RELEASE TRAFFIC.
5. REPEAT STEPS 1-4 FOR GIRDERS G2 AND G1.
6. RIG TO END SPAN GIRDERS PER DETAIL ON SHEET 06. REMOVE SLACK FROM MAIN LINES AND RIGGING.
7. TORCH CUT OR UNBOLT GIRDER AS SHOWN ON SHEET 11 AND DIAPHRAGMS AT LOCATIONS SHOWN ON SHEET 05
8. SET ONTO HAUL TRUCK AND RELEASE GIRDER FROM CRANE.
9. REPEAT STEPS 6-8 FOR END SPAN GIRDERS G2 AND G1.

Revision No. & Date	Vermont Agency of Transportation			Engineer's Seal	Drawing Status		Name	Date	PCL Civil Constructors, Inc.	
Rev. 1. 7/30/2015				STATE OF VERMONT TIMOTHY DAVIS NO. 97183 CIVIL LICENSED PROFESSIONAL ENGINEER	Jul 30 2015 12:55 PM FOR CONSTRUCTION	Drawn By	AJT	06/03/15	3810 Northdale Blvd. Suite 200, Tampa Florida 33624 (813)-264-9500 ; Fax: (813)-264-6689	
	Road No.	County / City	Financial Project ID No.			Design By	TMD/ AJT	06/03/15	Submittal DEMOLITION PLAN	PCL Project / Job No. I-91 Windsor / Hartford / 5514001
	I-91	Windsor / Hartford	IM 091-2(79)			Check By	TMD	06/30/15	Drawing Title SB DEMO - STAGE 9	Sheet No. 30

N:\District Office\Engineering\01 TIG Tampa Active Projects\5514001 - I-91 Hartford\70 Other\71 Demolition\01 CAD Files\Demo_Plan_P.dwg 7/30/2015 9:39 AM

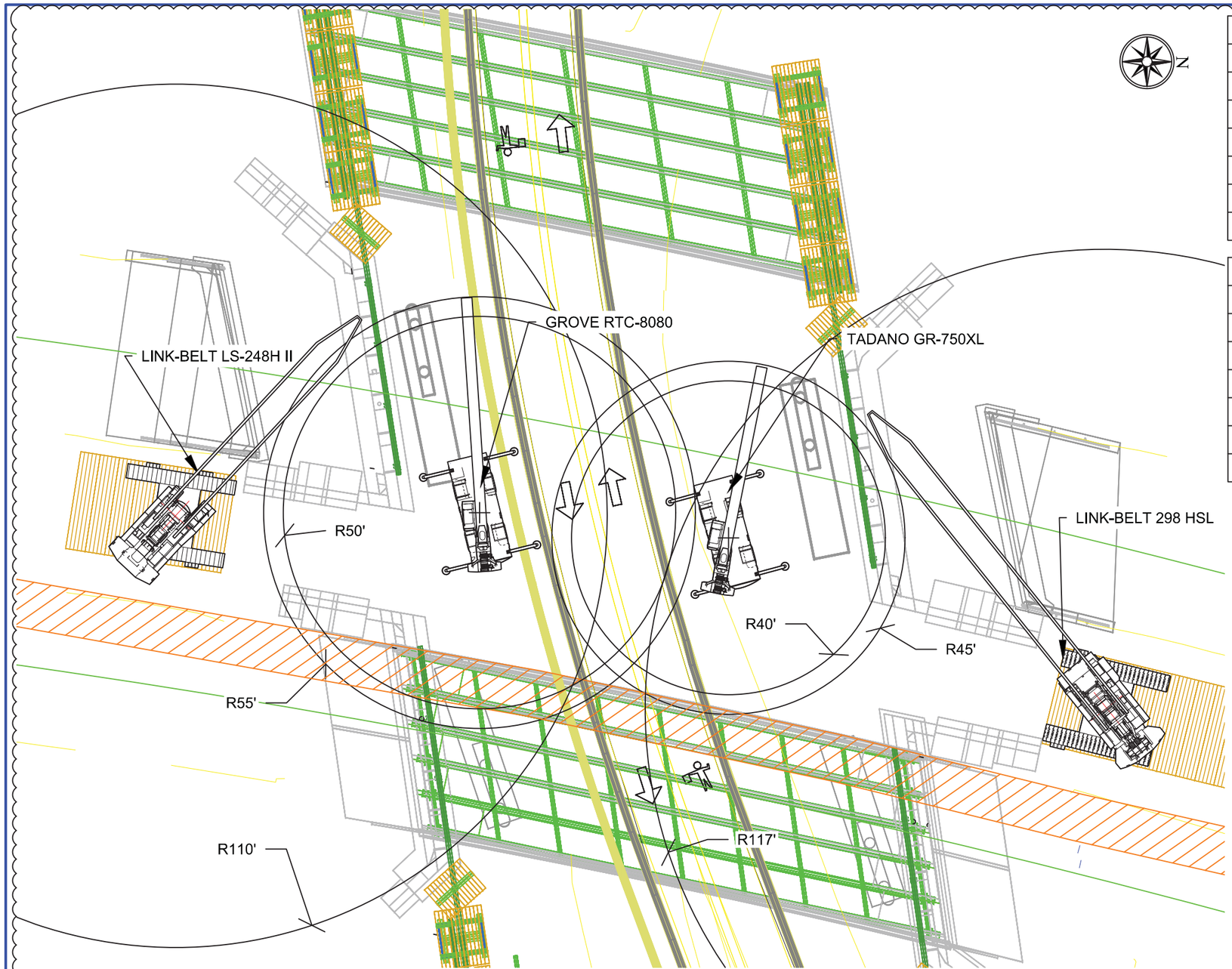

CRANE INFO:		GROVE RTC-8080	TADANO GR-750XL
BOOM LENGTH:	ft	90	88.6, TELE MODE I
PIECE TYPE		CAP SECTION	CAP SECTION
MAX. PIECE WEIGHT	lbs	23,000	23,000
PICK WEIGHT + RIGGING:	lbs	25,330	25,330
MAX. CRANE RADIUS:	ft	40	35
CRANE CAPACITY:	ft	35,800	34,700
% OF CHART:		71%	73%

CRANE INFO:		GROVE RTC-8080	TADANO GR-750XL
BOOM LENGTH:	ft	90	88.6, TELE MODE I
PIECE TYPE		COLUMN	COLUMN
MAX. PIECE WEIGHT	lbs	16,000	16,000
PICK WEIGHT + RIGGING:	lbs	18,330	18,330
MAX. CRANE RADIUS:	ft	55	40
CRANE CAPACITY:	ft	20,400	27,700
% OF CHART:		90%	66%

SB DEMOLITION - STAGE 9 (CON'T)

1. VERTICALLY CUT PIER CAP AT LOCATIONS SHOWN ON SHEET 12.
2. RIG TO EXTERIOR SECTION OF PIER CAP. (SEE DETAIL SHEET 08) REMOVE SLACK FROM RIGGING.
3. HORIZONTALLY CUT PIER CAP AT TOP OF EXTERIOR COLUMN AS SHOWN ON SHEET 12.
4. REMOVE CAP SECTION, FLAGGING TRAFFIC AS NECESSARY.
5. REPEAT STEPS 2-4 FOR INTERIOR SECTION OF PIER CAP.
6. CHOKE TOP OF COLUMN AS SHOWN ON SHEET 08.
7. SAWCUT OR CHIP BOTTOM OF COLUMN. USE CRANE TO STABILIZE TOP OF COLUMN AS CUT IS MADE.
8. USE CRANE TO LAYOVER COLUMN ONTO FOOTING. DO NOT PICK ENTIRE COLUMN WITH RIGGING. CUT OR CHIP COLUMN ON GROUND FOR REMOVAL FROM SITE.

SB DEMOLITION - STAGE 9

CLOSURE WORK

1

Revision No. & Date	Vermont Agency of Transportation			Engineer's Seal	Drawing Status		Name	Date	PCL Civil Constructors, Inc. 3810 Northdale Blvd. Suite 200, Tampa Florida 33624 (813)-264-9500 ; Fax: (813)-264-6689	
Rev. 1. 7/30/2015				STATE OF VERMONT TIMOTHY DAVIS NO. 97183 CIVIL LICENSED PROFESSIONAL ENGINEER	Jul 30 2015 12:55 PM FOR CONSTRUCTION	Drawn By	AJT	06/03/15		
	Road No.	County / City	Financial Project ID No.			Design By	TMD/ AJT	06/03/15	Submittal DEMOLITION PLAN	PCL Project / Job No. I-91 Windsor / Hartford / 5514001
	I-91	Windsor / Hartford	IM 091-2(79)			Check By	TMD	06/30/15	Drawing Title SB DEMO - STAGE 9 (1)	Sheet No. 31A

H:\District Office\Engineering\01 TIG Tampa Active Projects\5514001 - I-91 Hartford\03 Other\71 Demolition\01 CAD Files\Demo_Plan_P.dwg 7/30/2015 9:39 AM

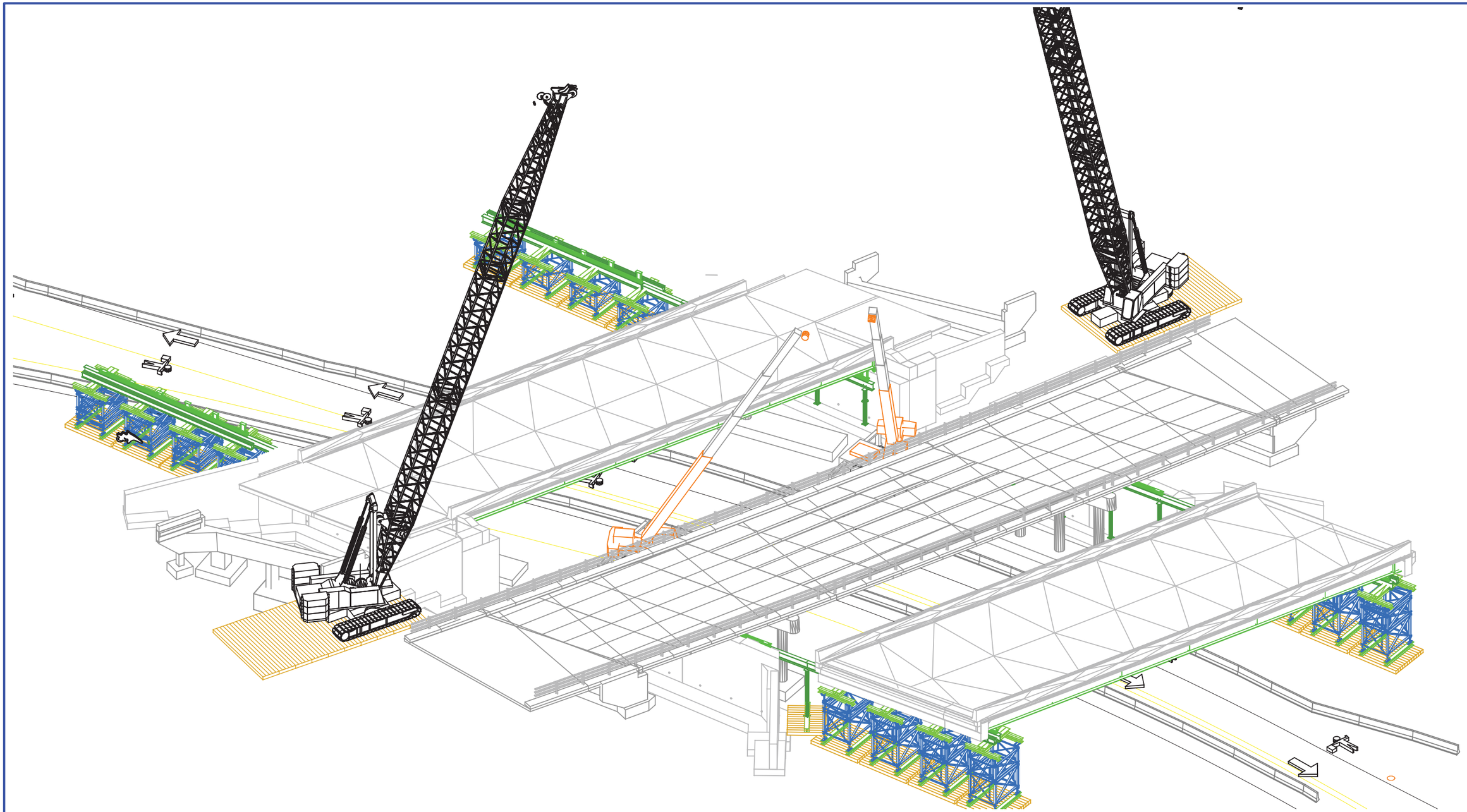

SB DEMOLITION - ISOMETRIC

Revision No. & Date	Vermont Agency of Transportation			Engineer's Seal	Drawing Status		Name	Date	PCL Civil Constructors, Inc. 3810 Northdale Blvd. Suite 200, Tampa Florida 33624 (813)-264-9500 ; Fax: (813)-264-6689	
				STATE OF VERMONT TIMOTHY DAVIS NO. 97183 CIVIL LICENSED PROFESSIONAL ENGINEER	Jul 30 2015 12:55 PM FOR CONSTRUCTION	Drawn By	AJT	06/03/15		
	Road No.	County / City	Financial Project ID No.			Design By	TMD/ AJT	06/03/15	Submittal DEMOLITION PLAN	PCL Project / Job No. I-91 Windsor / Hartford / 5514001
	I-91	Windsor / Hartford	IM 091-2(79)			Check By	TMD	06/30/15	Drawing Title SB DEMO - ISOMETRIC	Sheet No. 31

N:\District Office\Engineering\01 TIG Tampa Active Projects\5514001 - I-91 Hartford\70 Other\71 Demolition\01 CAD Files\Demo_Plan_P.dwg 7/30/2015 9:41 AM

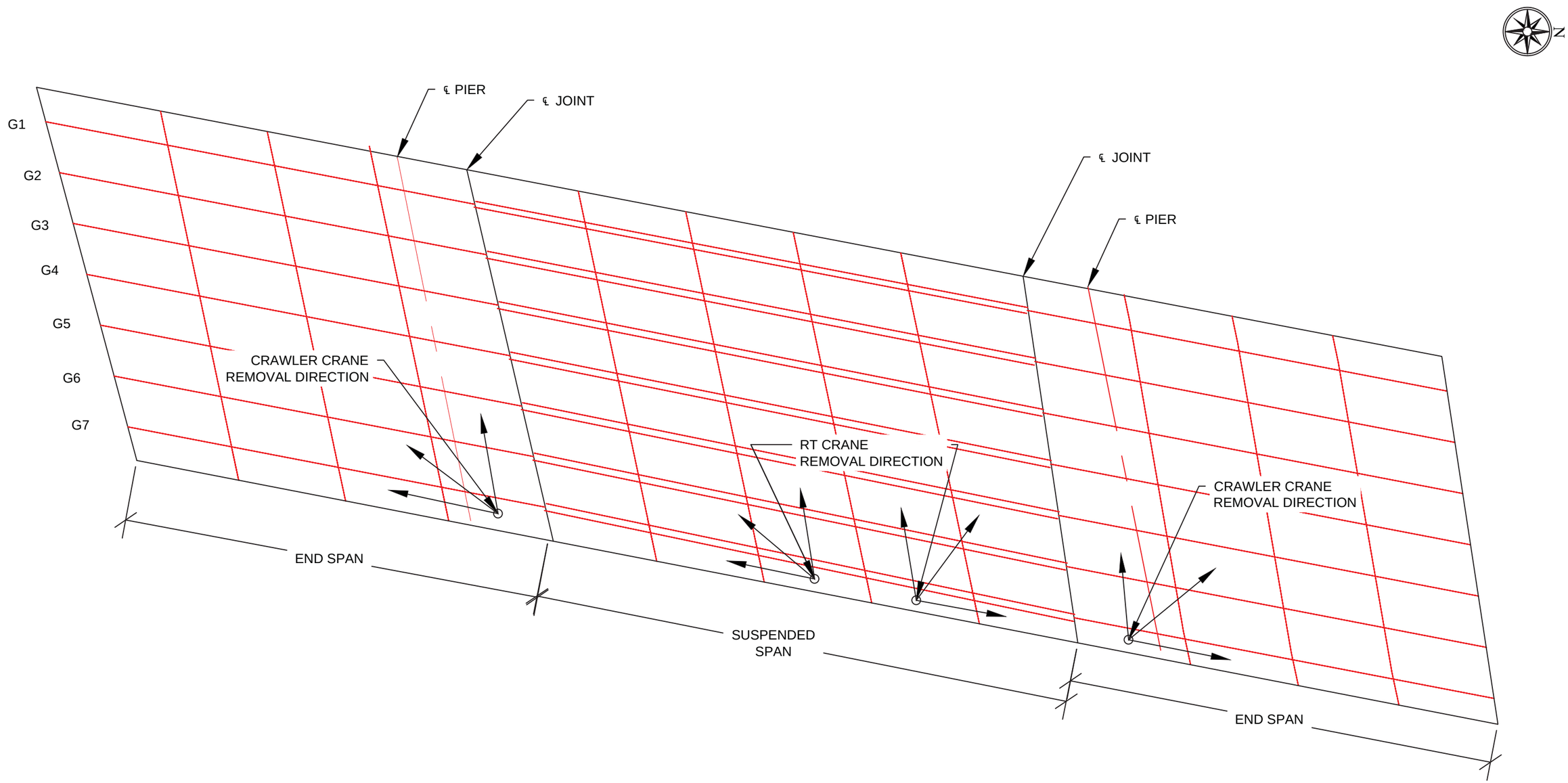

SB DECK PANEL - REMOVAL SEQUENCE

SEQUENCE SUBJECT TO FIELD MODIFICATION UNDER THE
DIRECTION OF THE CONSTRUCTION ENGINEER

Revision No. & Date	Vermont Agency of Transportation			Engineer's Seal	Drawing Status		Name	Date	PCL Civil Constructors, Inc. 3810 Northdale Blvd. Suite 200, Tampa Florida 33624 (813)-264-9500 ; Fax: (813)-264-6689	
				STATE OF VERMONT TIMOTHY DAVIS NO. 97183 CIVIL LICENSED PROFESSIONAL ENGINEER	Jul 30 2015 12:56 PM FOR CONSTRUCTION	Drawn By	AJT	06/03/15		
	Road No.	County / City	Financial Project ID No.			Design By	TMD/ AJT	06/03/15	Submittal DEMOLITION PLAN	PCL Project / Job No. I-91 Windsor / Hartford / 5514001
	I-91	Windsor / Windsor / Hartford	IM 091-2(79)			Check By	TMD	06/30/15	Drawing Title SB SLAB REMOVAL	Sheet No. 32

N:\District Office\Engineering\01 TIG Tampa Active Projects\5514001 - I-91 Hartford\70 Other\71 Demolition\01 CAD Files\Demo_Plan_P.dwg 7/30/2015 9:41 AM