CONSTRUCTION LEADERS

LETTER OF TRANSMITTAL			
DATE:	**March 24, 2015**	PCL JOB NO:	**5515002**
ATTN:	**Chris Barker**	TRANSMITTAL NO:	**046**

To: **State of Vermont Agency of Transportation**
One National Life Drive

(802) 828-0053

Re: Hartford Lateral Slide
Project No.: IM 091-2(79)
Contract ID.: 12A132 County: Windsor PCL FILE NO: 5515002-31

WE ARE SENDING X Attached ____ Under separate cover via **Email & SP** the following:
____ Shop drawings ____ Prints X Plans ____ Samples ____ Specifications
____ Copy of Letter ____ Change Order X Other

COPIES	SPEC.	REVISION	DESCRIPTION
1	**Spec. Prov. #90**		**Lateral Slide System**

TRANSMITTED for as checked below:

X For approval ____ Approved as submitted ____ Resubmit **1** Copies for approval
____ For your use ____ Approved as noted ____ Submit ____ Copies for distribution
____ As requested ____ Returned for corrections ____ Return ____ Corrected prints
____ For review and comment

Remarks:

Please return an email of this approved submittal to Erich Heymann (ewheymann@pcl.com) and Jeremy Mackling (jmackling@pcl.com).

We request the review and return of this submittal within 14 days. Please advise if this request cannot be met so we can plan accordingly.

By: **Erich Heymann,** Project Engineer

COPY TO: Project Files

3810 Northdale Blvd., Suite 200; Tampa, FL • (813) 264-9500 • (813) 264-6689 (fax)

CONSTRUCTION LEADERS

SUBMITTAL NO. : 31
Lateral Slide System

Item No.	Specification	Description
1	Spec. Prov. #90	Lateral Slide System

.

PROJECT:
HARTFORD LATERAL SLIDE
PROJECT NO.: IM 091-2(79)
CONTRACT ID.: 12A132

OWNER:
STATE OF VERMONT AGENCY OF TRANSPORTATION

ENGINEER OF RECORD:
STATE OF VERMONT AGENCY OF TRANSPORTATION

CONTRACTOR:
PCL CIVIL CONSTRUCTORS, INC.

MARCH 24, 2015

3810 Northdale Blvd., Suite 200; Tampa, FL • (813) 264-9500 • (813) 264-6689 (fax)

HORIZONTAL SLIDE

Assembly Plan

PCL Civil Constructors, Inc.

Transportation Infrastructure Group - Tampa

PCL Job # 5515002

Hartford Lateral Slide Project

I-91 over US-5

Project No.: IM 091-2(79)

Hartford, VT

A. Introduction

As required in the Special Provisions, the following documents are included:

1. Horizontal Slide System
2. Horizontal Slide Execution
3. Monitoring of Bridge Movement
4. Vertical Jacking and Elastomeric Bearing Installation
5. Contingency Plans

B. Horizontal Slide System

Included are signed and sealed drawings and calculations for the temporary slide system.

C. Horizontal Slide Execution

The pumps will be located on the bridge deck above slider beams. There will be (1) pump for each jack.

The bridges will be slid using (2) Enerpac RR-5020 (50 Ton) jacks (drawings sheet 33). The jacks will be contained in a “Reaction Frame” (drawings sheet 35) that will push off of the slide support beam by way of the reaction blocks (drawings sheet 33). The jacks will be connected to the slide beam with a lug plate and a jack lug that screws into the top of the jack (drawings sheet 34). Note that for the Southbound Bridge the jacks will be located on the downhill side to control the movement of the bridge into its final position.

Each stroke of the jack will be approximately 18” (note that this is not full stroke of the jack). After each advancement the superstructure will be locked down using the slide beam stop (drawings sheet 36). The jacks will then be retracted/advanced in front of the next reaction block. Once the jack is in position the superstructure will be advanced enough to loosen the slide beam stop. The slide beam stop will then be removed and the process will be repeated.

Slide Process:

1. Set up all equipment and check that equipment is operating properly
2. Complete all required checklists
3. Using flaggers & UTO’s stop traffic
4. Slide Superstructure
5. Monitor movement to ensure jacks are sliding together
6. Once jacks are stroked out allow traffic to proceed
7. Lock structure into place to prevent movement and retract jacks
8. Repeat steps 3-7 until slide is complete
9. Install bearing restrainers and lower superstructure onto bearings
10. Survey final location of superstructure
11. Weld girders to elastomeric bearings
12. Complete all required checklists

See specific details below for geometric control, monitoring requirements and checklists.

D. Monitoring of Bridge Movement

Pre-Slide:

Lay out reference points on slide support beam in (1”) increments. Reference points will be used to monitor advancement of the superstructure during the slide.

Prior to sliding of the superstructure a detailed checklist (see attached Pre-Slide Checklist) will be completed by field personnel, then subsequently checked by the Field Engineer and Project Engineer. In addition, the Pre-Slide checklist must be signed off on by the Project Superintendent and Project Manager prior to commencing the slide.

Specifically, the slide system will be checked to ensure all equipment is in place and functioning properly.

Prior to the actual slide, a trial slide will take place. This will ensure that all equipment is functioning properly and the structure advances as anticipated.

During the Slide:

Throughout the sliding process the superstructure movement will be continuously and closely monitored for even the slightest variation between the North and South rails. In the event that one jack gets too far ahead of the other, pressure to the leading jack will be shut off and the trailing jack will be allowed to catch up.

In addition to monitoring the superstructure movement at the jacks, survey will monitor the superstructure to ensure proper alignment North/South. In the event that the bridge becomes off line (North/South), post tensioning bars were installed in the top of the new abutment to allow for jacking the bridge longitudinally as necessary. See sheet 38 of the attached drawings for reference.

Post-Slide:

Upon completion of sliding of the superstructure a detailed checklist (see attached Post-Slide Checklist) will be completed by field personnel, then subsequently checked by the Field Engineer and Project Engineer. In addition, the Post-Slide checklist must be signed off on by the Project Superintendent and Project Manager prior to commencing the slide.

In addition to completing the required checklists, survey will check the superstructure to ensure it is in the correct location.

E. Vertical Jacking and Elastomeric Bearing Installation

See sheet 37 of the attached drawings for the lowering system hydraulic schematic.

Elastomeric Bearing Installation Procedure:

1. Slide elastomeric bearing into position prior to sliding superstructure
2. Upon completion of the slide, install bearing restrainer angles and secure with anchor rod (anchor rod will be grouted a minimum of 72 hours prior to sliding superstructure).
3. Check bearings to make sure they line up with girders above.

4. Using jacks, lower superstructure onto elastomeric bearings.
5. Survey superstructure to ensure it is in the correct location.
6. Weld girders to elastomeric bearings as required.

F. Contingency Plans

In the event of a major breakdown or equipment malfunction backup equipment, including jacks and hydraulic pumps, will be on site and in the general vicinity of the work.

In the event that either a jack or complete hydraulic system needs to be replaced, movement will be stopped, the system will be locked down, and the defective part will be replaced.

In the event that the bridge becomes off line (North/South), post tensioning bars were installed in the top of the new abutment to allow for jacking the bridge longitudinally as necessary (drawings sheet 38).

The following Key Personnel will be on site at all times during the sliding of the superstructure:

1. Superintendent – Ron Gibbens
2. Project Manager – Jeremy Mackling
3. Project Engineer – Erich Heymann
4. Field Engineer – Robert McKeen
5. District HSE Manager – Larry Fortier
6. HSE Supervisor – Dillon Cook
7. District Engineer – Tim Davis

CONSTRUCTION

Vermont Agency of Transportation

I-91
Windsor County
Project Number: IM 091-2(79)

Hartford Lateral Slide

Calculations for Temporary Structures including:

Falsework and Slide System

Submitted By,

Tim Davis, P.E.
VT P.E. 97183

André Tousignant, P.E.
VT P.E. # 100162

March 23, 2015

PCL Civil Constructors Inc.
3810 Northdale Blvd. Suite 200
Tampa, Florida 33624
813-264-9500

TABLE OF CONTENTS

COVER PAGE 1
TABLE OF CONTENTS 2
GENERAL NOTES AND ASSUMPTIONS 3
VERTICAL LOADS AND SYSTEM MODEL 4
SHORING TOWER DESIGN 20
PIPE SUPPORT DESIGN 27
SLIDE AND SLIDE SUPPORT BEAM DESIGN 37
HORIZONTAL LOADING 43
HORIZONTAL JACK REACTION FRAME DESIGN 45
SLIDE BEAM AND PTFE DESIGN 55
UP/DOWN STATION ADJUSTMENT FRAME DESIGN 60
REFERENCES 61

Introduction

The purpose of this calculation is the design of the temporary falsework associated with the erection and lateral sliding of the I-91 bridges above US-5.

Design Criteria

Loads:

- Dead Load
  - Concrete Weight = 155 lb/ft^3
  - Steel Weight = 490 lb/ft^3
- Live Load
  - 25 psf

Materials:

- Steel
  - W Shapes / HP's / Channels, F_y = 50 ksi or better
  - HSS Tubes F_y = 46 ksi or better
  - Misc plates / shims, F_y = 36 ksi or better
  - Pipe Material, F_y = 35 ksi or better
- Concrete
  - Allowable bearing pressure = 0.65 x 0.85 x 3,500 psi / 1.5 = 1300 psi
- Timber
  - Timber Crane mats – Mixed Oak #2 or better
    - F_b = 575 psi
    - F_v = 155 psi
    - F_{cperp} = 800 psi
- PTFE / Stainless Steel sliding surfaces
  - u_k = 0.10
- Shoring Towers
  - 100 k / leg EFCO (or similar)

Design Aids:

- AASHTO Guide Design Specification for Bridge Temporary Works
- AISC ASD 9th Edition
- NDS Timber Design Manual
- Hilti Product guides
- Enerpac Product guides
- EFCO Product guides

Engineering Calculation Sheet

Project: I-91 NB/SB Bridges, Hartford By: AJT Date: 3/4/2015

Project #: 5514001

Title: Slide / Erection Falsework Design

Falsework Vertical Loads **Reference**

Falsework will be eccentrically loaded during deck pour. Assume weight is evenly distributed along all six bearings. Maximum Load = 121 kips (includes additional 5%)

Additional load on interior / exterior girders from live load:

= (20 psf)(8.75 ft)(133.5ft)(0.5)

= 11.7 k

New Beam Dead Load Reaction: 121+11.7k

= 132.7 kips Use 133 kips as design load during pour

During slide, maximum weight of complete bridge is assumed evenly distributed along all six bearings. Maximum Load = 132.7 kips (includes additional 5%)

New Beam Dead Load Reaction: 133+11.7k

= 144.7 kips Use 145 kips as design load during rolling

New Span Quantity Take Off

				Weight (lbs)	Percent of Total on Exterior		Percent of Total on Interior	
SB	**Steel**	G1		38100	1.0	38100	0.0	0
		G2		38225	0.0	0	1.0	38225
		G3		38225	0.0	0	1.0	38225
		G4		38225	0.0	0	1.0	38225
		G5		38225	0.0	0	1.0	38225
		G6		38100	1.0	38100	0.0	0
		P1		3640	0.1	364	0.2	728
		P2		1300	0.1	130	0.2	260
		P3		1300	0.1	130	0.2	260
		P4		1000	0.1	100	0.2	200
		P5		1000	0.1	100	0.2	200
		P6		10	0.5	5	0.0	0
		D1		12400	0.1	1240	0.2	2480
		D2		33500	0.1	3350	0.2	6700
6597 Sq. ft. D	**Deck**	38.74 sq. ft.	136.16 LF	843974.144	0.1428	120519.508	0.1785	150649.38
	Bridge Rail	6.28 sq. ft.	136.16 LF	136813.568	0.5	68406.784	0.0	0
	Backwall	15.2 sq. ft.	51.33 LF	249669.12	0.1428	35652.7503	0.1785	44565.938
			Total	**1,513,706.83**				
					Maximum Exterior DL		**Maximum Interior DL**	
					134.0		**122.1**	
NB	**Steel**	G1		37866	1.00	37866	0.00	0
		G2		38055	0.00	0	1.00	38055
		G3		38055	0.00	0	1.00	38055
		G4		38055	0.00	0	1.00	38055
		G5		38055	0.00	0	1.00	38055
		G6		37866	1.00	37866	0.00	0
		P1		2716	0.10	271.6	0.20	543.2
		P2		1940	0.10	194	0.20	388
		P3		1890	0.10	189	0.20	378
		DP1		6	0.50	3	0.00	0
		D1		26775	0.10	2677.5	0.20	5355
		D2		3510	0.10	351	0.20	702
		D3		3510	0.10	351	0.20	702
6402 Sq. ft. D	**Deck**	39.97 sq. ft	136.16 LF	870770.432	0.1383	120427.551	0.1808	157435.29
	Bridge Rail	6.28 sq. ft	136.16 LF	136813.568	0.5	68406.784	0.0	0
	Backwall	15.2 sq. ft.	49.7 LF	241740.8	0.1383	33432.7526	0.1808	43706.737
			Total	**1,517,623.80**				
					Maximum Exterior DL		**Maximum Interior DL**	
					132.1		**123.6**	

Evenly Divided	126,142
Without Barrier	114,741
Evenly Divided	126,469
Without Barrier	115,068

Maximum Exterior with 5% Additional	**140.8**
Maximum Interior with 5% Additional	**129.8**

Evenly Divided	132,792
Without Barrier	120,821

Software licensed to	Job No	Sheet No 1	Rev
	Part		
Job Title	Ref		
	By	Date 27-Feb-15	Chd
Client	File Hartford Slide Beam.std	Date/Time 05-Mar-2015 10:35	

Job Information

	Engineer	Checked	Approved
Name:			
Date:	27-Feb-15		

Structure Type	SPACE FRAME

Number of Nodes	1096	Highest Node	2244
Number of Elements	1488	Highest Beam	3009

Number of Basic Load Cases	0
Number of Combination Load Cases	0

Included in this printout are data for:

All	The Whole Structure

Included in this printout are results for load cases:

Type	L/C	Name
Generation	1	LOAD GENERATION, LOAD #1, (1 of 74)
Generation	2	LOAD GENERATION, LOAD #2, (2 of 74)
Generation	3	LOAD GENERATION, LOAD #3, (3 of 74)
Generation	4	LOAD GENERATION, LOAD #4, (4 of 74)
Generation	5	LOAD GENERATION, LOAD #5, (5 of 74)
Generation	6	LOAD GENERATION, LOAD #6, (6 of 74)
Generation	7	LOAD GENERATION, LOAD #7, (7 of 74)
Generation	8	LOAD GENERATION, LOAD #8, (8 of 74)
Generation	9	LOAD GENERATION, LOAD #9, (9 of 74)
Generation	10	LOAD GENERATION, LOAD #10, (10 of 7
Generation	11	LOAD GENERATION, LOAD #11, (11 of 7
Generation	12	LOAD GENERATION, LOAD #12, (12 of 7
Generation	13	LOAD GENERATION, LOAD #13, (13 of 7
Generation	14	LOAD GENERATION, LOAD #14, (14 of 7
Generation	15	LOAD GENERATION, LOAD #15, (15 of 7
Generation	16	LOAD GENERATION, LOAD #16, (16 of 7
Generation	17	LOAD GENERATION, LOAD #17, (17 of 7
Generation	18	LOAD GENERATION, LOAD #18, (18 of 7
Generation	19	LOAD GENERATION, LOAD #19, (19 of 7
Generation	20	LOAD GENERATION, LOAD #20, (20 of 7
Generation	21	LOAD GENERATION, LOAD #21, (21 of 7
Generation	22	LOAD GENERATION, LOAD #22, (22 of 7
Generation	23	LOAD GENERATION, LOAD #23, (23 of 7
Generation	24	LOAD GENERATION, LOAD #24, (24 of 7
Generation	25	LOAD GENERATION, LOAD #25, (25 of 7
Generation	26	LOAD GENERATION, LOAD #26, (26 of 7
Generation	27	LOAD GENERATION, LOAD #27, (27 of 7
Generation	28	LOAD GENERATION, LOAD #28, (28 of 7

Software licensed to	Job No	Sheet No 2	Rev
	Part		
Job Title	Ref		
	By	Date 27-Feb-15	Chd
Client	File Hartford Slide Beam.std	Date/Time 05-Mar-2015 10:35	

Job Information Cont...

Type	L/C	Name
Generation	29	LOAD GENERATION, LOAD #29, (29 of 7
Generation	30	LOAD GENERATION, LOAD #30, (30 of 7
Generation	31	LOAD GENERATION, LOAD #31, (31 of 7
Generation	32	LOAD GENERATION, LOAD #32, (32 of 7
Generation	33	LOAD GENERATION, LOAD #33, (33 of 7
Generation	34	LOAD GENERATION, LOAD #34, (34 of 7
Generation	35	LOAD GENERATION, LOAD #35, (35 of 7
Generation	36	LOAD GENERATION, LOAD #36, (36 of 7
Generation	37	LOAD GENERATION, LOAD #37, (37 of 7
Generation	38	LOAD GENERATION, LOAD #38, (38 of 7
Generation	39	LOAD GENERATION, LOAD #39, (39 of 7
Generation	40	LOAD GENERATION, LOAD #40, (40 of 7
Generation	41	LOAD GENERATION, LOAD #41, (41 of 7
Generation	42	LOAD GENERATION, LOAD #42, (42 of 7
Generation	43	LOAD GENERATION, LOAD #43, (43 of 7
Generation	44	LOAD GENERATION, LOAD #44, (44 of 7
Generation	45	LOAD GENERATION, LOAD #45, (45 of 7
Generation	46	LOAD GENERATION, LOAD #46, (46 of 7
Generation	47	LOAD GENERATION, LOAD #47, (47 of 7
Generation	48	LOAD GENERATION, LOAD #48, (48 of 7
Generation	49	LOAD GENERATION, LOAD #49, (49 of 7
Generation	50	LOAD GENERATION, LOAD #50, (50 of 7
Generation	51	LOAD GENERATION, LOAD #51, (51 of 7
Generation	52	LOAD GENERATION, LOAD #52, (52 of 7
Generation	53	LOAD GENERATION, LOAD #53, (53 of 7
Generation	54	LOAD GENERATION, LOAD #54, (54 of 7
Generation	55	LOAD GENERATION, LOAD #55, (55 of 7
Generation	56	LOAD GENERATION, LOAD #56, (56 of 7
Generation	57	LOAD GENERATION, LOAD #57, (57 of 7
Generation	58	LOAD GENERATION, LOAD #58, (58 of 7
Generation	59	LOAD GENERATION, LOAD #59, (59 of 7
Generation	60	LOAD GENERATION, LOAD #60, (60 of 7
Generation	61	LOAD GENERATION, LOAD #61, (61 of 7
Generation	62	LOAD GENERATION, LOAD #62, (62 of 7
Generation	63	LOAD GENERATION, LOAD #63, (63 of 7
Generation	64	LOAD GENERATION, LOAD #64, (64 of 7
Generation	65	LOAD GENERATION, LOAD #65, (65 of 7
Generation	66	LOAD GENERATION, LOAD #66, (66 of 7
Generation	67	LOAD GENERATION, LOAD #67, (67 of 7
Generation	68	LOAD GENERATION, LOAD #68, (68 of 7
Generation	69	LOAD GENERATION, LOAD #69, (69 of 7
Generation	70	LOAD GENERATION, LOAD #70, (70 of 7
Generation	71	LOAD GENERATION, LOAD #71, (71 of 7
Generation	72	LOAD GENERATION, LOAD #72, (72 of 7
Generation	73	LOAD GENERATION, LOAD #73, (73 of 7

Software licensed to	Job No	Sheet No 3	Rev
	Part		
Job Title	Ref		
	By	Date 27-Feb-15	Chd
Client	File Hartford Slide Beam.std	Date/Time 05-Mar-2015 10:35	

Job Information Cont...

Type	L/C	Name
Generation	74	LOAD GENERATION, LOAD #74, (74 of 7
Generation	75	LOAD GENERATION, LOAD #75, (1 of 74
Generation	76	LOAD GENERATION, LOAD #76, (2 of 74
Generation	77	LOAD GENERATION, LOAD #77, (3 of 74
Generation	78	LOAD GENERATION, LOAD #78, (4 of 74
Generation	79	LOAD GENERATION, LOAD #79, (5 of 74
Generation	80	LOAD GENERATION, LOAD #80, (6 of 74
Generation	81	LOAD GENERATION, LOAD #81, (7 of 74
Generation	82	LOAD GENERATION, LOAD #82, (8 of 74
Generation	83	LOAD GENERATION, LOAD #83, (9 of 74
Generation	84	LOAD GENERATION, LOAD #84, (10 of 7
Generation	85	LOAD GENERATION, LOAD #85, (11 of 7
Generation	86	LOAD GENERATION, LOAD #86, (12 of 7
Generation	87	LOAD GENERATION, LOAD #87, (13 of 7
Generation	88	LOAD GENERATION, LOAD #88, (14 of 7
Generation	89	LOAD GENERATION, LOAD #89, (15 of 7
Generation	90	LOAD GENERATION, LOAD #90, (16 of 7
Generation	91	LOAD GENERATION, LOAD #91, (17 of 7
Generation	92	LOAD GENERATION, LOAD #92, (18 of 7
Generation	93	LOAD GENERATION, LOAD #93, (19 of 7
Generation	94	LOAD GENERATION, LOAD #94, (20 of 7
Generation	95	LOAD GENERATION, LOAD #95, (21 of 7
Generation	96	LOAD GENERATION, LOAD #96, (22 of 7
Generation	97	LOAD GENERATION, LOAD #97, (23 of 7
Generation	98	LOAD GENERATION, LOAD #98, (24 of 7
Generation	99	LOAD GENERATION, LOAD #99, (25 of 7
Generation	100	LOAD GENERATION, LOAD #100, (26 of
Generation	101	LOAD GENERATION, LOAD #101, (27 of
Generation	102	LOAD GENERATION, LOAD #102, (28 of
Generation	103	LOAD GENERATION, LOAD #103, (29 of
Generation	104	LOAD GENERATION, LOAD #104, (30 of
Generation	105	LOAD GENERATION, LOAD #105, (31 of
Generation	106	LOAD GENERATION, LOAD #106, (32 of
Generation	107	LOAD GENERATION, LOAD #107, (33 of
Generation	108	LOAD GENERATION, LOAD #108, (34 of
Generation	109	LOAD GENERATION, LOAD #109, (35 of
Generation	110	LOAD GENERATION, LOAD #110, (36 of
Generation	111	LOAD GENERATION, LOAD #111, (37 of
Generation	112	LOAD GENERATION, LOAD #112, (38 of
Generation	113	LOAD GENERATION, LOAD #113, (39 of
Generation	114	LOAD GENERATION, LOAD #114, (40 of
Generation	115	LOAD GENERATION, LOAD #115, (41 of
Generation	116	LOAD GENERATION, LOAD #116, (42 of
Generation	117	LOAD GENERATION, LOAD #117, (43 of
Generation	118	LOAD GENERATION, LOAD #118, (44 of

Software licensed to	Job No	Sheet No 4	Rev
	Part		
Job Title	Ref		
	By	Date 27-Feb-15	Chd
Client	File Hartford Slide Beam.std	Date/Time 05-Mar-2015 10:35	

Job Information Cont...

Type	L/C	Name
Generation	118	LOAD GENERATION, LOAD #118, (44 of
Generation	119	LOAD GENERATION, LOAD #119, (45 of
Generation	120	LOAD GENERATION, LOAD #120, (46 of
Generation	121	LOAD GENERATION, LOAD #121, (47 of
Generation	122	LOAD GENERATION, LOAD #122, (48 of
Generation	123	LOAD GENERATION, LOAD #123, (49 of
Generation	124	LOAD GENERATION, LOAD #124, (50 of
Generation	125	LOAD GENERATION, LOAD #125, (51 of
Generation	126	LOAD GENERATION, LOAD #126, (52 of
Generation	127	LOAD GENERATION, LOAD #127, (53 of
Generation	128	LOAD GENERATION, LOAD #128, (54 of
Generation	129	LOAD GENERATION, LOAD #129, (55 of
Generation	130	LOAD GENERATION, LOAD #130, (56 of
Generation	131	LOAD GENERATION, LOAD #131, (57 of
Generation	132	LOAD GENERATION, LOAD #132, (58 of
Generation	133	LOAD GENERATION, LOAD #133, (59 of
Generation	134	LOAD GENERATION, LOAD #134, (60 of
Generation	135	LOAD GENERATION, LOAD #135, (61 of
Generation	136	LOAD GENERATION, LOAD #136, (62 of
Generation	137	LOAD GENERATION, LOAD #137, (63 of
Generation	138	LOAD GENERATION, LOAD #138, (64 of
Generation	139	LOAD GENERATION, LOAD #139, (65 of
Generation	140	LOAD GENERATION, LOAD #140, (66 of
Generation	141	LOAD GENERATION, LOAD #141, (67 of
Generation	142	LOAD GENERATION, LOAD #142, (68 of
Generation	143	LOAD GENERATION, LOAD #143, (69 of
Generation	144	LOAD GENERATION, LOAD #144, (70 of
Generation	145	LOAD GENERATION, LOAD #145, (71 of
Generation	146	LOAD GENERATION, LOAD #146, (72 of
Generation	147	LOAD GENERATION, LOAD #147, (73 of
Generation	148	LOAD GENERATION, LOAD #148, (74 of
Generation	149	LOAD GENERATION, LOAD #149, (1 of 7
Generation	150	LOAD GENERATION, LOAD #150, (2 of 7
Generation	151	LOAD GENERATION, LOAD #151, (3 of 7
Generation	152	LOAD GENERATION, LOAD #152, (4 of 7
Generation	153	LOAD GENERATION, LOAD #153, (5 of 7
Generation	154	LOAD GENERATION, LOAD #154, (6 of 7
Generation	155	LOAD GENERATION, LOAD #155, (7 of 7
Generation	156	LOAD GENERATION, LOAD #156, (8 of 7
Generation	157	LOAD GENERATION, LOAD #157, (9 of 7
Generation	158	LOAD GENERATION, LOAD #158, (10 of
Generation	159	LOAD GENERATION, LOAD #159, (11 of
Generation	160	LOAD GENERATION, LOAD #160, (12 of
Generation	161	LOAD GENERATION, LOAD #161, (13 of
Generation	162	LOAD GENERATION, LOAD #162, (14 of

Software licensed to	Job No	Sheet No 5	Rev
	Part		
Job Title	Ref		
	By	Date 27-Feb-15	Chd
Client	File Hartford Slide Beam.std	Date/Time 05-Mar-2015 10:35	

Job Information Cont...

Type	L/C	Name
Generation	162	LOAD GENERATION, LOAD #162, (14 of
Generation	163	LOAD GENERATION, LOAD #163, (15 of
Generation	164	LOAD GENERATION, LOAD #164, (16 of
Generation	165	LOAD GENERATION, LOAD #165, (17 of
Generation	166	LOAD GENERATION, LOAD #166, (18 of
Generation	167	LOAD GENERATION, LOAD #167, (19 of
Generation	168	LOAD GENERATION, LOAD #168, (20 of
Generation	169	LOAD GENERATION, LOAD #169, (21 of
Generation	170	LOAD GENERATION, LOAD #170, (22 of
Generation	171	LOAD GENERATION, LOAD #171, (23 of
Generation	172	LOAD GENERATION, LOAD #172, (24 of
Generation	173	LOAD GENERATION, LOAD #173, (25 of
Generation	174	LOAD GENERATION, LOAD #174, (26 of
Generation	175	LOAD GENERATION, LOAD #175, (27 of
Generation	176	LOAD GENERATION, LOAD #176, (28 of
Generation	177	LOAD GENERATION, LOAD #177, (29 of
Generation	178	LOAD GENERATION, LOAD #178, (30 of
Generation	179	LOAD GENERATION, LOAD #179, (31 of
Generation	180	LOAD GENERATION, LOAD #180, (32 of
Generation	181	LOAD GENERATION, LOAD #181, (33 of
Generation	182	LOAD GENERATION, LOAD #182, (34 of
Generation	183	LOAD GENERATION, LOAD #183, (35 of
Generation	184	LOAD GENERATION, LOAD #184, (36 of
Generation	185	LOAD GENERATION, LOAD #185, (37 of
Generation	186	LOAD GENERATION, LOAD #186, (38 of
Generation	187	LOAD GENERATION, LOAD #187, (39 of
Generation	188	LOAD GENERATION, LOAD #188, (40 of
Generation	189	LOAD GENERATION, LOAD #189, (41 of
Generation	190	LOAD GENERATION, LOAD #190, (42 of
Generation	191	LOAD GENERATION, LOAD #191, (43 of
Generation	192	LOAD GENERATION, LOAD #192, (44 of
Generation	193	LOAD GENERATION, LOAD #193, (45 of
Generation	194	LOAD GENERATION, LOAD #194, (46 of
Generation	195	LOAD GENERATION, LOAD #195, (47 of
Generation	196	LOAD GENERATION, LOAD #196, (48 of
Generation	197	LOAD GENERATION, LOAD #197, (49 of
Generation	198	LOAD GENERATION, LOAD #198, (50 of
Generation	199	LOAD GENERATION, LOAD #199, (51 of
Generation	200	LOAD GENERATION, LOAD #200, (52 of
Generation	201	LOAD GENERATION, LOAD #201, (53 of
Generation	202	LOAD GENERATION, LOAD #202, (54 of
Generation	203	LOAD GENERATION, LOAD #203, (55 of
Generation	204	LOAD GENERATION, LOAD #204, (56 of
Generation	205	LOAD GENERATION, LOAD #205, (57 of
Generation	206	LOAD GENERATION, LOAD #206, (58 of

Software licensed to	Job No	Sheet No 6	Rev
	Part		
Job Title	Ref		
	By	Date 27-Feb-15	Chd
Client	File Hartford Slide Beam.std	Date/Time 05-Mar-2015 10:35	

Job Information Cont...

Type	L/C	Name
Generation	206	LOAD GENERATION, LOAD #206, (58 of
Generation	207	LOAD GENERATION, LOAD #207, (59 of
Generation	208	LOAD GENERATION, LOAD #208, (60 of
Generation	209	LOAD GENERATION, LOAD #209, (61 of
Generation	210	LOAD GENERATION, LOAD #210, (62 of
Generation	211	LOAD GENERATION, LOAD #211, (63 of
Generation	212	LOAD GENERATION, LOAD #212, (64 of
Generation	213	LOAD GENERATION, LOAD #213, (65 of
Generation	214	LOAD GENERATION, LOAD #214, (66 of
Generation	215	LOAD GENERATION, LOAD #215, (67 of
Generation	216	LOAD GENERATION, LOAD #216, (68 of
Generation	217	LOAD GENERATION, LOAD #217, (69 of
Generation	218	LOAD GENERATION, LOAD #218, (70 of
Generation	219	LOAD GENERATION, LOAD #219, (71 of
Generation	220	LOAD GENERATION, LOAD #220, (72 of
Generation	221	LOAD GENERATION, LOAD #221, (73 of
Generation	222	LOAD GENERATION, LOAD #222, (74 of
Generation	223	LOAD GENERATION, LOAD #223, (1 of 7
Generation	224	LOAD GENERATION, LOAD #224, (2 of 7
Generation	225	LOAD GENERATION, LOAD #225, (3 of 7
Generation	226	LOAD GENERATION, LOAD #226, (4 of 7
Generation	227	LOAD GENERATION, LOAD #227, (5 of 7
Generation	228	LOAD GENERATION, LOAD #228, (6 of 7
Generation	229	LOAD GENERATION, LOAD #229, (7 of 7
Generation	230	LOAD GENERATION, LOAD #230, (8 of 7
Generation	231	LOAD GENERATION, LOAD #231, (9 of 7
Generation	232	LOAD GENERATION, LOAD #232, (10 of
Generation	233	LOAD GENERATION, LOAD #233, (11 of
Generation	234	LOAD GENERATION, LOAD #234, (12 of
Generation	235	LOAD GENERATION, LOAD #235, (13 of
Generation	236	LOAD GENERATION, LOAD #236, (14 of
Generation	237	LOAD GENERATION, LOAD #237, (15 of
Generation	238	LOAD GENERATION, LOAD #238, (16 of
Generation	239	LOAD GENERATION, LOAD #239, (17 of
Generation	240	LOAD GENERATION, LOAD #240, (18 of
Generation	241	LOAD GENERATION, LOAD #241, (19 of
Generation	242	LOAD GENERATION, LOAD #242, (20 of
Generation	243	LOAD GENERATION, LOAD #243, (21 of
Generation	244	LOAD GENERATION, LOAD #244, (22 of
Generation	245	LOAD GENERATION, LOAD #245, (23 of
Generation	246	LOAD GENERATION, LOAD #246, (24 of
Generation	247	LOAD GENERATION, LOAD #247, (25 of
Generation	248	LOAD GENERATION, LOAD #248, (26 of
Generation	249	LOAD GENERATION, LOAD #249, (27 of
Generation	250	LOAD GENERATION, LOAD #250, (28 of

Software licensed to	Job No	Sheet No 7	Rev
	Part		
Job Title	Ref		
	By	Date 27-Feb-15	Chd
Client	File Hartford Slide Beam.std	Date/Time 05-Mar-2015 10:35	

Job Information Cont...

Type	L/C	Name
Generation	250	LOAD GENERATION, LOAD #250, (28 of
Generation	251	LOAD GENERATION, LOAD #251, (29 of
Generation	252	LOAD GENERATION, LOAD #252, (30 of
Generation	253	LOAD GENERATION, LOAD #253, (31 of
Generation	254	LOAD GENERATION, LOAD #254, (32 of
Generation	255	LOAD GENERATION, LOAD #255, (33 of
Generation	256	LOAD GENERATION, LOAD #256, (34 of
Generation	257	LOAD GENERATION, LOAD #257, (35 of
Generation	258	LOAD GENERATION, LOAD #258, (36 of
Generation	259	LOAD GENERATION, LOAD #259, (37 of
Generation	260	LOAD GENERATION, LOAD #260, (38 of
Generation	261	LOAD GENERATION, LOAD #261, (39 of
Generation	262	LOAD GENERATION, LOAD #262, (40 of
Generation	263	LOAD GENERATION, LOAD #263, (41 of
Generation	264	LOAD GENERATION, LOAD #264, (42 of
Generation	265	LOAD GENERATION, LOAD #265, (43 of
Generation	266	LOAD GENERATION, LOAD #266, (44 of
Generation	267	LOAD GENERATION, LOAD #267, (45 of
Generation	268	LOAD GENERATION, LOAD #268, (46 of
Generation	269	LOAD GENERATION, LOAD #269, (47 of
Generation	270	LOAD GENERATION, LOAD #270, (48 of
Generation	271	LOAD GENERATION, LOAD #271, (49 of
Generation	272	LOAD GENERATION, LOAD #272, (50 of
Generation	273	LOAD GENERATION, LOAD #273, (51 of
Generation	274	LOAD GENERATION, LOAD #274, (52 of
Generation	275	LOAD GENERATION, LOAD #275, (53 of
Generation	276	LOAD GENERATION, LOAD #276, (54 of
Generation	277	LOAD GENERATION, LOAD #277, (55 of
Generation	278	LOAD GENERATION, LOAD #278, (56 of
Generation	279	LOAD GENERATION, LOAD #279, (57 of
Generation	280	LOAD GENERATION, LOAD #280, (58 of
Generation	281	LOAD GENERATION, LOAD #281, (59 of
Generation	282	LOAD GENERATION, LOAD #282, (60 of
Generation	283	LOAD GENERATION, LOAD #283, (61 of
Generation	284	LOAD GENERATION, LOAD #284, (62 of
Generation	285	LOAD GENERATION, LOAD #285, (63 of
Generation	286	LOAD GENERATION, LOAD #286, (64 of
Generation	287	LOAD GENERATION, LOAD #287, (65 of
Generation	288	LOAD GENERATION, LOAD #288, (66 of
Generation	289	LOAD GENERATION, LOAD #289, (67 of
Generation	290	LOAD GENERATION, LOAD #290, (68 of
Generation	291	LOAD GENERATION, LOAD #291, (69 of
Generation	292	LOAD GENERATION, LOAD #292, (70 of
Generation	293	LOAD GENERATION, LOAD #293, (71 of
Generation	294	LOAD GENERATION, LOAD #294, (72 of

Software licensed to	Job No	Sheet No 8	Rev
	Part		
Job Title	Ref		
	By	Date 27-Feb-15	Chd
Client	File Hartford Slide Beam.std	Date/Time 05-Mar-2015 10:35	

Job Information Cont...

Type	L/C	Name
Generation	294	LOAD GENERATION, LOAD #294, (72 of
Generation	295	LOAD GENERATION, LOAD #295, (73 of
Generation	296	LOAD GENERATION, LOAD #296, (74 of
Generation	297	LOAD GENERATION, LOAD #297, (1 of 1

Materials

Mat	Name	E (kip/in^2)	ν	Density (kip/in^3)	α (/°F)
1	STEEL	29E+3	0.300	0.000	6E -6
2	STAINLESSSTEEL	28E+3	0.300	0.000	10E -6
3	ALUMINUM	10E+3	0.330	0.000	13E -6
4	CONCRETE	3.15E+3	0.170	0.000	5E -6

Section Properties

Prop	Section	Area (in^2)	I_{yy} (in^4)	I_{zz} (in^4)	J (in^4)	Material
1	W24X68 D	43.000	391.000	4.58E+3	13.202	STEEL
2	W12X106 D	62.400	9.94E+3	1.87E+3	17.610	STEEL
3	HSST3X2X0.188	1.540	0.932	1.770	1.992	STEEL
4	HSST6X6X0.375	7.580	39.500	39.500	62.980	STEEL
5	Cir 0.50	0.196	0.003	0.003	0.006	STEEL
6	PIPX120	17.900	339.000	339.000	678.094	STEEL
7	Cir 9.00	63.617	322.062	322.062	644.125	STEEL
8	Cir 10.00	78.477	490.089	490.089	980.178	STEEL
9	HP14X117	34.400	443.000	1.22E+3	7.508	STEEL
10	W24X146	43.000	391.000	4.58E+3	13.202	STEEL
11	W24X68	20.100	70.400	1.83E+3	1.734	STEEL

Software licensed to	Job No	Sheet No 9	Rev
	Part		
Job Title	Ref		
	By	Date 27-Feb-15	Chd
Client	File Hartford Slide Beam.std	Date/Time 05-Mar-2015 10:35	

Supports

Node	X (kip/in)	Y (kip/in)	Z (kip/in)	rX (kip-ft/deg)	rY (kip-ft/deg)	rZ (kip-ft/deg)
153	Fixed	Fixed	Fixed	-	-	-
157	Fixed	Fixed	Fixed	-	-	-
158	Fixed	Fixed	Fixed	-	-	-
159	Fixed	Fixed	Fixed	-	-	-
160	-	-	-	-	-	-
165	-	-	-	-	-	-
166	Fixed	Fixed	Fixed	-	-	-
167	Fixed	Fixed	Fixed	-	-	-
168	Fixed	Fixed	Fixed	-	-	-
169	Fixed	Fixed	Fixed	-	-	-
174	-	-	-	-	-	-
175	Fixed	Fixed	Fixed	-	-	-
176	Fixed	Fixed	Fixed	-	-	-
177	Fixed	Fixed	Fixed	-	-	-
178	Fixed	Fixed	Fixed	-	-	-
183	-	-	-	-	-	-
184	Fixed	Fixed	Fixed	-	-	-
185	Fixed	Fixed	Fixed	-	-	-
186	Fixed	Fixed	Fixed	-	-	-
187	Fixed	Fixed	Fixed	-	-	-
1184	-	-	Fixed	-	-	-
1188	-	-	Fixed	-	-	-
1189	-	-	Fixed	-	-	-
1190	-	-	Fixed	-	-	-
1197	-	-	Fixed	-	-	-
1198	-	-	Fixed	-	-	-
1199	-	-	Fixed	-	-	-
1200	-	-	Fixed	-	-	-
1206	-	-	Fixed	-	-	-
1207	-	-	Fixed	-	-	-
1208	-	-	Fixed	-	-	-
1210	-	-	Fixed	-	-	-
1211	-	-	Fixed	-	-	-
1212	-	-	Fixed	-	-	-
1214	-	-	Fixed	-	-	-
1218	-	-	Fixed	-	-	-
1290	-	-	-	-	-	-
1291	-	-	-	-	-	-
1297	-	-	-	-	-	-
1312	-	-	-	-	-	-
1352	-	-	-	-	-	-
1353	-	-	-	-	-	-
1359	-	-	-	-	-	-
1374	-	-	-	-	-	-
1414	-	-	-	-	-	-

Software licensed to	Job No	Sheet No 10	Rev
	Part		
Job Title	Ref		
	By	Date 27-Feb-15	Chd
Client	File Hartford Slide Beam.std	Date/Time 05-Mar-2015 10:35	

Supports Cont...

Node	X (kip/in)	Y (kip/in)	Z (kip/in)	rX (kip-ft/deg)	rY (kip-ft/deg)	rZ (kip-ft/deg)
1415	-	-	-	-	-	-
1421	-	-	-	-	-	-
1436	-	-	-	-	-	-
1476	-	-	-	-	-	-
1477	-	-	-	-	-	-
1483	-	-	-	-	-	-
1498	-	-	-	-	-	-
1538	-	-	-	-	-	-
1539	-	-	-	-	-	-
1545	-	-	-	-	-	-
1560	-	-	-	-	-	-
1600	-	-	-	-	-	-
1601	-	-	-	-	-	-
1607	-	-	-	-	-	-
1622	-	-	-	-	-	-
1662	-	-	-	-	-	-
1663	-	-	-	-	-	-
1669	-	-	-	-	-	-
1684	-	-	-	-	-	-
1724	-	-	-	-	-	-
1725	-	-	-	-	-	-
1731	-	-	-	-	-	-
1746	-	-	-	-	-	-
1786	-	-	-	-	-	-
1787	-	-	-	-	-	-
1793	-	-	-	-	-	-
1808	-	-	-	-	-	-
1848	-	-	-	-	-	-
1849	-	-	-	-	-	-
1855	-	-	-	-	-	-
1870	-	-	-	-	-	-
1910	-	-	-	-	-	-
1911	-	-	-	-	-	-
1917	-	-	-	-	-	-
1932	-	-	-	-	-	-
1972	-	-	-	-	-	-
1973	-	-	-	-	-	-
1979	-	-	-	-	-	-
1994	-	-	-	-	-	-
2034	-	-	-	-	-	-
2035	-	-	-	-	-	-
2041	-	-	-	-	-	-
2056	-	-	-	-	-	-
2096	-	-	-	-	-	-
2097	-	-	-	-	-	-

Software licensed to	Job No	Sheet No 11	Rev
	Part		
Job Title	Ref		
	By	Date 27-Feb-15	Chd
Client	File Hartford Slide Beam.std	Date/Time 05-Mar-2015 10:35	

Supports Cont...

Node	X (kip/in)	Y (kip/in)	Z (kip/in)	rX (kip-ft/deg)	rY (kip-ft/deg)	rZ (kip-ft/deg)
2103	-	-	-	-	-	-
2118	-	-	-	-	-	-
2158	-	-	-	-	-	-
2159	-	-	-	-	-	-
2165	-	-	-	-	-	-
2180	-	-	-	-	-	-
2220	-	-	-	-	-	-
2221	-	-	-	-	-	-
2227	-	-	-	-	-	-
2242	-	-	-	-	-	-

Moving Load Definition : Type 1

Width (ft)
-

Force (kip)	Distance (ft)
133.000	-

Maximum reaction under beam during deck pour

Moving Load Definition : Type 2

Width (ft)
-

Force (kip)	Distance (ft)
145.000	-

Maximum reaction under beam during bridge slide

Software licensed to	Job No	Sheet No 12	Rev
	Part		
Job Title	Ref		
	By	Date 27-Feb-15	Chd
Client	File Hartford Slide Beam.std	Date/Time 05-Mar-2015 10:35	

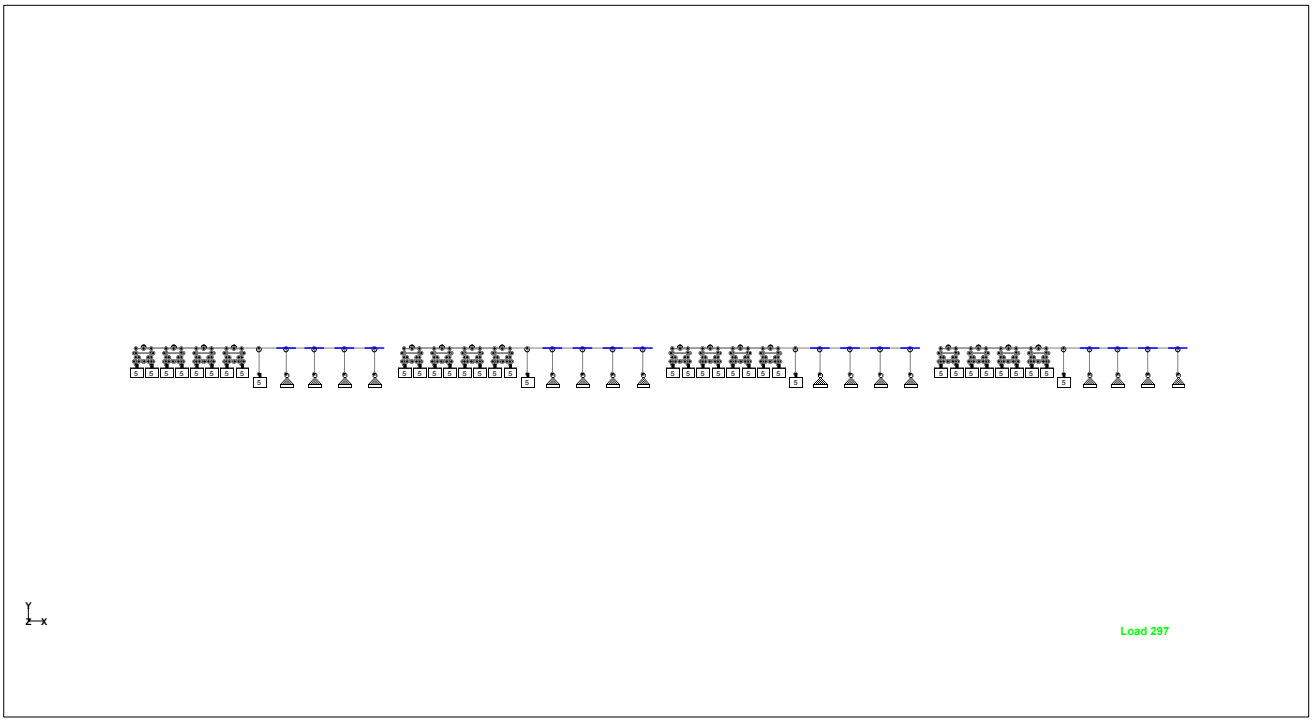

Overall View

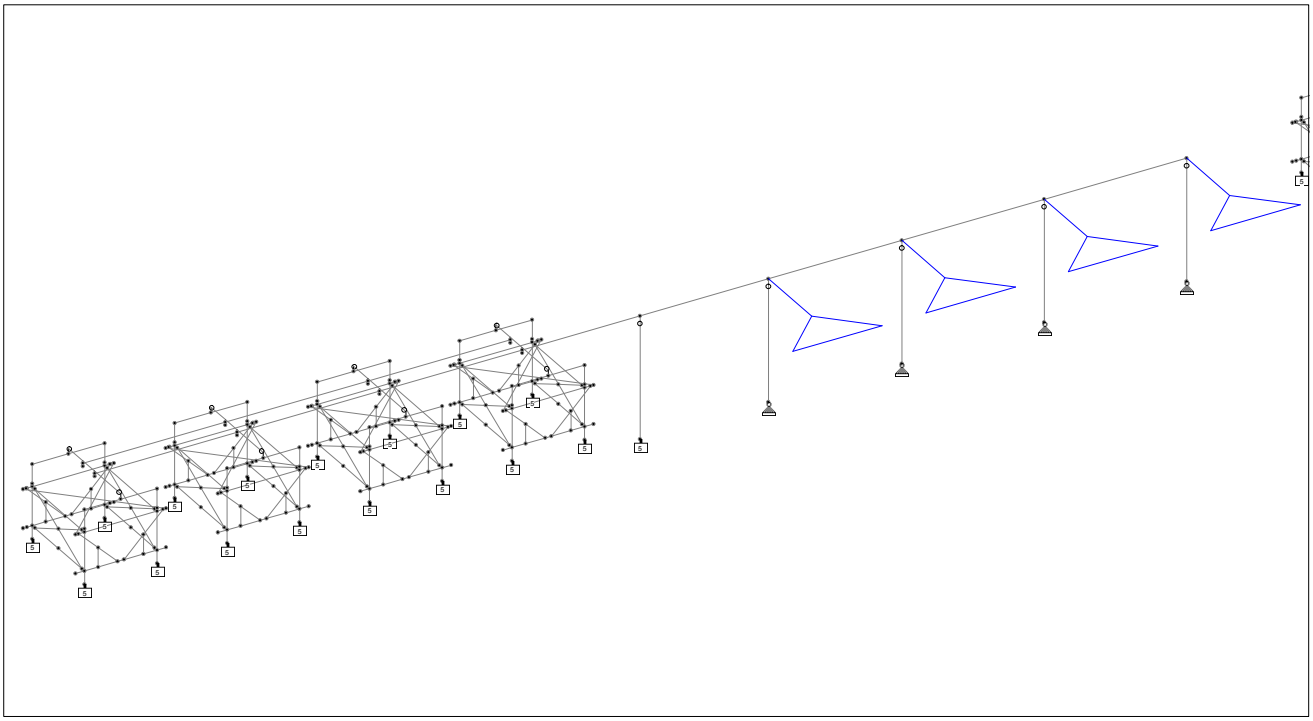

Typical Abutment

Software licensed to	Job No	Sheet No 13	Rev
	Part		
Job Title	Ref		
	By	Date 27-Feb-15	Chd
Client	File Hartford Slide Beam.std	Date/Time 05-Mar-2015 10:35	

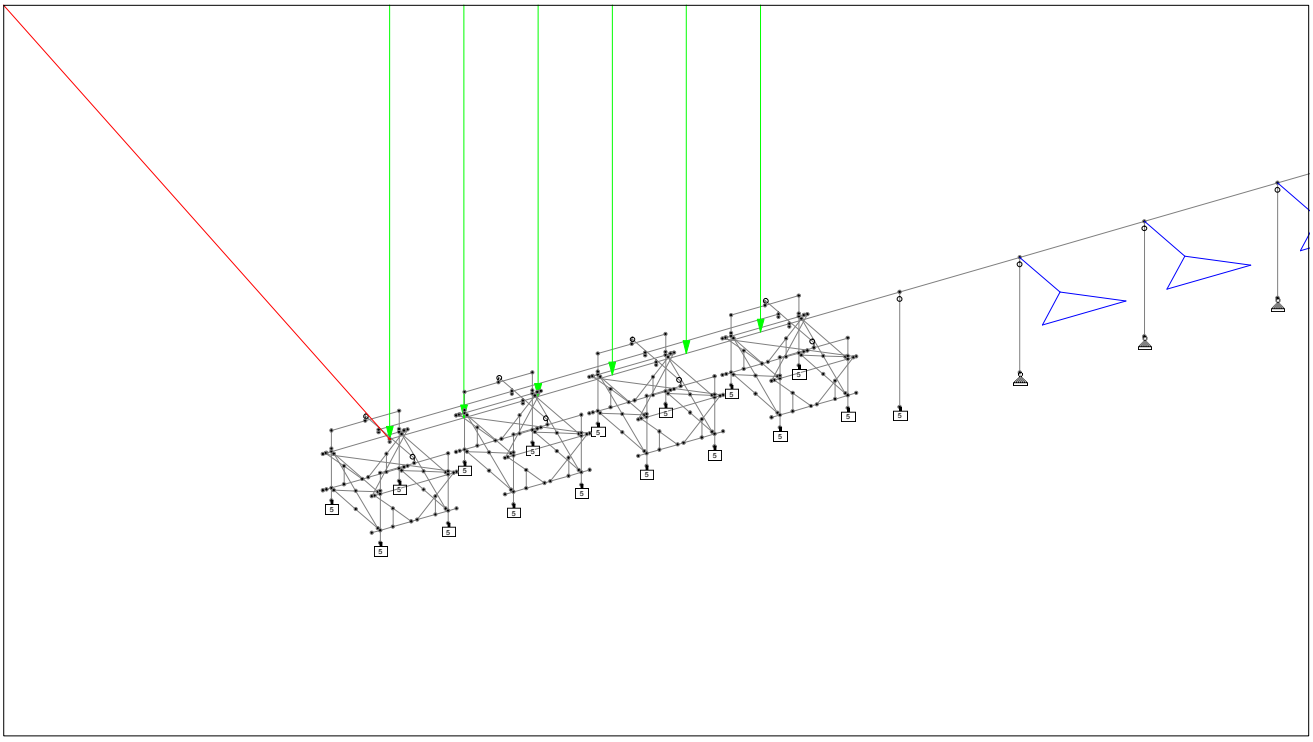

Abutment Loading

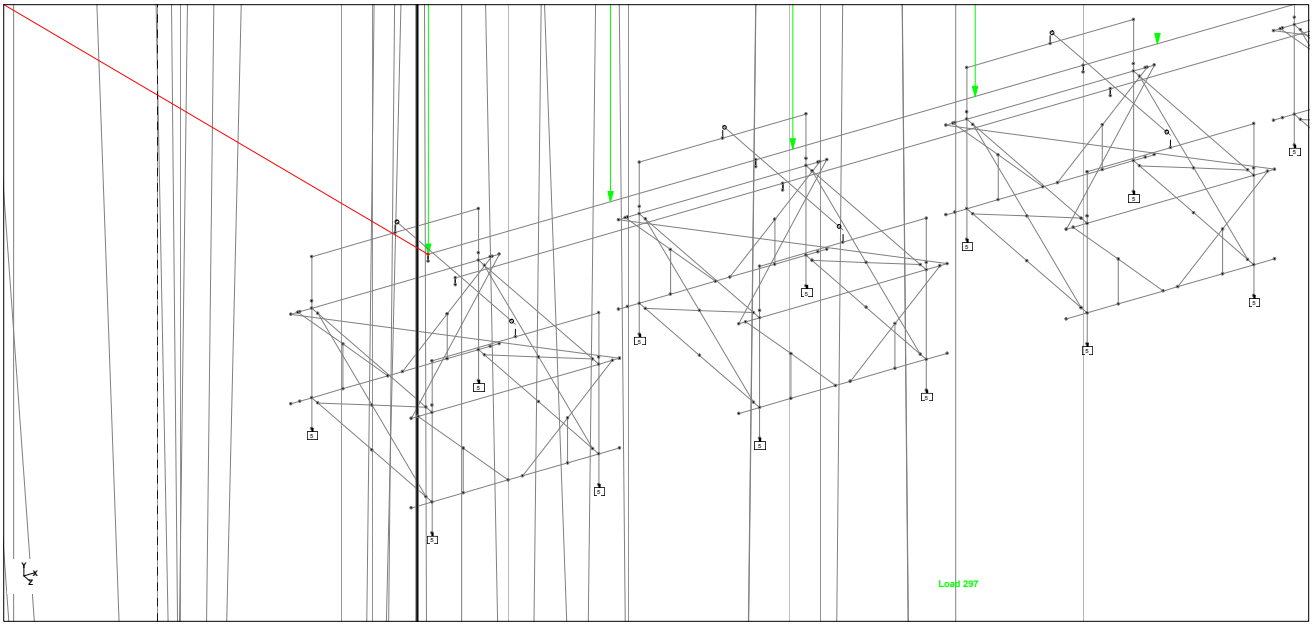

Tower Detail (Input data was modified after picture taken)

Software licensed to	Job No	Sheet No 14	Rev
	Part		
Job Title	Ref		
	By	Date 27-Feb-15	Chd
Client	File Hartford Slide Beam.std	Date/Time 05-Mar-2015 10:35	

Uplift at end of tower during slide, OK as model does not take self weight into account

Node Displacement Summary

	Node	L/C	X (in)	Y (in)	Z (in)	Resultant (in)	rX (rad)	rY (rad)	rZ (rad)
Max X	1201	222:LOAD GEN	**0.169**	1.374	0.000	1.384	0.000	-0.000	-0.002
Min X	1481	297:LOAD GEN	**-0.023**	-0.119	-0.043	0.128	-0.001	0.000	0.000
Max Y	1263	54:LOAD GEN	0.002	**1.929**	-0.004	1.929	-0.000	-0.000	-0.000
Min Y	1215	225:LOAD GEN	-0.001	**-0.547**	-0.002	0.547	0.000	-0.000	-0.000
Max Z	1191	37:LOAD GEN	-0.000	-0.486	**0.007**	0.486	-0.000	0.000	0.001
Min Z	1228	297:LOAD GEN	0.002	-0.483	**-0.130**	0.500	0.000	0.000	0.000
Max rX	1232	226:LOAD GEN	-0.003	-0.473	-0.026	0.473	**0.003**	-0.000	-0.001
Min rX	85	297:LOAD GEN	0.003	-0.423	-0.101	0.435	**-0.003**	-0.000	0.001
Max rY	1441	297:LOAD GEN	-0.020	-0.128	-0.035	0.134	-0.001	**0.000**	0.001
Min rY	1890	297:LOAD GEN	-0.017	-0.106	-0.098	0.145	-0.001	**-0.001**	0.001
Max rZ	1250	297:LOAD GEN	0.007	-0.184	-0.065	0.195	0.000	0.000	**0.007**
Min rZ	1217	228:LOAD GEN	-0.002	-0.196	0.001	0.196	-0.000	0.000	**-0.004**
Max Rst	1263	54:LOAD GEN	0.002	1.929	-0.004	**1.929**	-0.000	-0.000	-0.000

Beam Maximum Forces by Section Property

Section		Axial Max Fx (kip)	Shear Max Fy (kip)	Shear Max Fz (kip)	Torsion Max Mx (kip-ft)	Bending Max My (kip-ft)	Bending Max Mz (kip-ft)	
W24X68 D	Max +ve	4.206	174.324	0.131	0.016	1.274	382.308	Design loads for pour support beam
	Max -ve	-10.411	-110.526	-0.191	-0.027	-1.989	-396.522	
W12X106 D	Max +ve	0.583	189.645	9.444	3.266	16.601	5.158	
	Max -ve	-0.671	-143.730	-5.608	-3.349	-8.923	-718.649	
HSST3X2X0.188	Max +ve	2.170	0.286	0.933	0.027	0.396	0.345	
	Max -ve	-9.317	-0.389	-0.921	-0.022	-0.430	-0.340	
HSST6X6X0.375	Max +ve	95.113	9.658	9.324	0.219	1.127	22.599	
	Max -ve	-0.598	-9.324	-0.574	-0.313	-21.820	-16.682	
Cir 0.50	Max +ve	0.254	0.000	0.000	0.000	0.000	0.000	
	Max -ve	-0.537	-0.000	-0.000	-0.000	-0.000	-0.000	
PIPX120	Max +ve	317.946	0.000	0.000	0.000	0.000	0.000	Design load for pipe supports
	Max -ve	-34.627	-0.000	-0.000	0.000	-0.000	-0.000	
Cir 9.00	Max +ve	289.205	10.115	0.987	13.244	0.441	8.881	Falsework loading during slide
	Max -ve	-13.618	-6.213	-0.984	-5.898	-0.412	-5.399	
Cir 10.00	Max +ve	270.823	6.478	0.204	1.989	0.083	7.856	Falsework loading during deck pour
	Max -ve	-8.014	-10.411	-0.226	-1.303	-0.075	-12.798	
HP14X117	Max +ve	9.658	94.880	0.375	0.199	1.186	22.599	
	Max -ve	-0.342	-95.113	-0.314	-0.200	-1.187	-357.855	
W24X146	Max +ve	10.115	230.472	0.569	0.056	6.493	620.371	Design loads for slide support beam
	Max -ve	-4.403	-233.574	-0.926	-0.117	-8.504	-511.458	

Engineering Calculation Sheet

Project: I-91 NB/SB Bridges, Hartford By: AJT Date: 3/4/2015

Project #: 5514001

Title: Slide / Erection Falsework Design

Vertical Loads **Reference**

From STAAD output, maximum vertical load on falsework towers during slide is 289.2 kips, use 296 kips.

Maximum vertical load on falsework towers during deck pour is 270.8 kips, use 271 kips

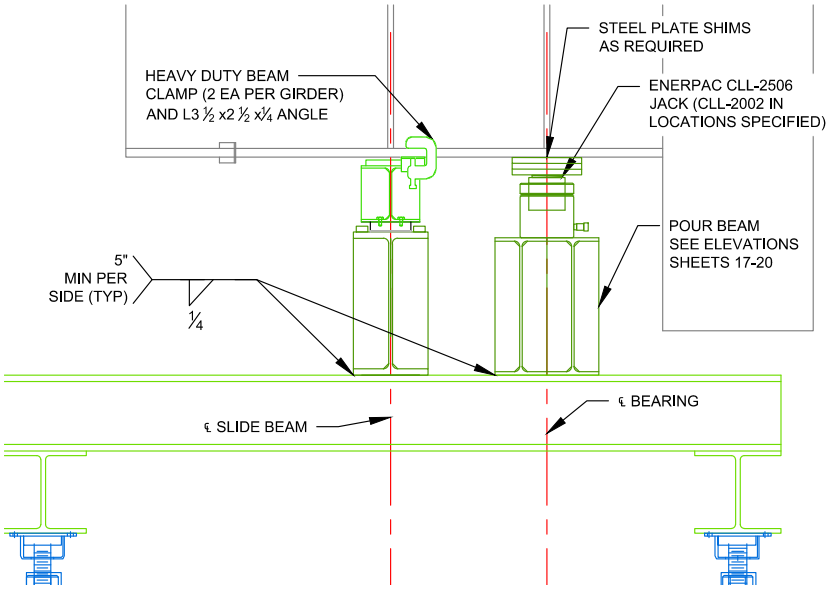

For 296 kips at center of top falsework beam, shear and bending loads are:

V = 296 k / 2

= 148 k

M = (296K)(10ft)/4

= 740 ft*k **Maximum**

For 271 kips offset 2'-3" from center of beam (to sit under permanent bearing), shear and bending loads are:

$V_{max} = R_1$ = (271K)(5ft+2'-3")/10

= 196.5 kips **Maximum**

R_2 = (271K)(2'-9")/10

= 74.25 kips

M = (271k)(7.25ft)(2.75ft)/10

= 541ft*k

For maximum 196.5 kip reaction, shear and bending on lower falsework beam are:

V = 196.5/ 2

= 98.25 k **Maximum**

M = (196.5)(8)/4

= 393 ft*k **Maximum**

98.25k Max reaction on falsework tower leg is less than 100k allowable, OK

For maximum 148 kip reaction during roll, shear and bending on lower falsework beam are:

V = 148 / 2

= 74k

M = (148)(8 ft)/4

= 296 ft*k

74k Max reaction on falsework tower leg is less than 100k allowable, OK

Project:	I-91 Hartford	By: AJT	Date: 2/23/2015
Project #:	5514001	Check By:	Date
Title:	Upper Falsework Beam		

Double beam - all maximum loads divided by two

M_x	370	ft-kip	L_b	5	ft	C_B	1
M_y	9.3	ft-kip	L_x	10	ft	K_x	1
V	98.25	kip	L_y	0	ft	K_y	1
R	98.25	kip	a	6	in	C_{mx}	1
P	0	kip	T	0	kip	C_{my}	1
N	5	in	F	98.25	kip	Load	Interior
$t_{stiffener}$	1/2	in					

Section:	W12x120	F_y =	50	ksi	F_u =	65	ksi		
A	35.3	in^2	k	1.8125	in	X_2*10^6	184	1/ksi	
d	13.12	in	$b_f/2t_f$	5.6		I_x	1070	in^4	
t_w	0.71	in	h/t_w	13.7		S_x	163	in^3	
b_f	12.32	in	r_T	3.38	in	r_x	5.51	in	
t_f	1.105	in	X_1	5240	ksi	I_y	345	in^4	
S_y	56	in^3	d_c	9.495	in	Z_y	85.4	in^3	
r_y	3.13	in	Z_x	186	in^3	E	29000	ksi	

Section Classification

Webs	Compact		Flange	Compact	

Flexure

L_c	11.03463702	ft					
F_{bx}	33	ksi	M_x	448.25	ft-kip	OK	82.5%
F_{by}	37.5	ksi	M_y	175	ft-kip	OK	5.3%

Shear

F_v	20	ksi	V_{allow}	186.304	kip	OK	52.7%

Axial

(Kl/r)	21.77858439		C_c	106.9987902			
F_a	28.10904721	ksi	P_{allow}	992.2493667	kips	OK	0.0%

Combined Stresses

f_a	0	ksi		f_{bx}	27.2392638	ksi	
f_{by}	1.992857143	ksi		f_t	0	ksi	
F_t	30	ksi		F'_{ex}	314.8414174	ksi	
F'_{ey}	0	ksi					
Axial Compression and Bending:				0.878575094		OK	87.9%
AxialTension and Bending:				0.878575094		OK	87.9%

Special Design Considerations (Concentrated Loads) — ***Stiffeners NOT required***

Local Flange Bending — *Stiffeners NOT required*

P_{bf}	163.75	kips	t_{min}	0.723878443	in	OK	65.5%

Local Web Yielding — *Bearing Stiffeners NOT required*

F_{allow}	9.840375587	ksi				OK	29.8%

Web Crippling — *Bearing Stiffeners NOT required*

R_{allow}	476.9130081	kips				OK	20.6%

Sidesway Web Buckling — *Bearing Stiffeners NOT required*

$(d_c/t_w)/(l/b_f)$	2.745971831		R_{allow}	N/A	kips	OK	0.00%

Compression Buckling of the Web — *Stiffeners NOT required*

$(4100t_{wc}^3\sqrt{(F_{yc})})/P_{bf}$	63.3669197	in				OK	14.98%

~~Stiffener Design~~

$h_{stiffener}$	N/A	in	$w_{stiffener}$	12.32	in	$Cont_{web}$	17.75	in

Stiffener Axial

(Kl/r)	#VALUE!		C_c	106.9445464				
F_a	#VALUE!	ksi	P_{allow}	#VALUE!	kips		#VALUE!	#VALUE!

Weld Design

l_{weld}	43.64	in	R_w	2.251374885	kip/in	t_{weld}	0.15163837	in

Project:	I-91 Hartford	By: AJT	Date: 2/23/2015
Project #:	5514001	Check By:	Date
Title:	Lower Falsework Beam		

M_x	393	ft-kip	L_b	8	ft	C_B	1
M_y	9.9	ft-kip	L_x	8	ft	K_x	1
V	98.25	kip	L_y	0	ft	K_y	1
R	98.25	kip	a	6	in	C_{mx}	1
P	0	kip	T	0	kip	C_{my}	1
N	5	in	F	98.25	kip	Load	Interior
$t_{stiffener}$	1/2	in					

Section:	HP14x117	F_y =	50	ksi	F_u =	65	ksi	
A	34.4	in^2	k	1.5	in	X_2*10^6	659	1/ksi
d	14.21	in	$b_f/2t_f$	9.2		I_x	1220	in^4
t_w	0.805	in	h/t_w	14.2		S_x	172	in^3
b_f	14.885	in	r_T	4	in	r_x	5.96	in
t_f	0.805	in	X_1	3870	ksi	I_y	443	in^4
S_y	59.5	in^3	d_c	11.21	in	Z_y	91.4	in^3
r_y	3.59	in	Z_x	194	in^3	E	29000	ksi

Section Classification

Webs	Compact	Flange	Noncompact

Flexure

L_c	13.33202695	ft					
F_{bx}	32.99461761	ksi	M_x	472.9228525	ft-kip	OK	83.1%
F_{by}	30	ksi	M_y	148.75	ft-kip	OK	6.7%

Shear

F_v	20	ksi	V_{allow}	228.781	kip	OK	42.9%

Axial

(Kl/r)	16.10738255		C_c	106.9987902			
F_a	28.69547104	ksi	P_{allow}	987.1242036	kips	OK	0.0%

Combined Stresses

f_a	0	ksi		f_{bx}	27.41860465	ksi	
f_{by}	1.996638655	ksi		f_t	0	ksi	
F_t	30	ksi		F'_{ex}	575.5740518	ksi	
F'_{ey}	0	ksi					
Axial Compression and Bending:				0.897556968		OK	89.8%
AxialTension and Bending:				0.897556968		OK	89.8%

Special Design Considerations (Concentrated Loads) ***Stiffeners NOT required***

Local Flange Bending *Stiffeners NOT required*

P_{bf}	163.75	kips	t_{min}	0.723878443	in	OK	89.9%

Local Web Yielding *Bearing Stiffeners NOT required*

F_{allow}	9.763975155	ksi				OK	29.6%

Web Crippling *Bearing Stiffeners NOT required*

R_{allow}	635.7963272	kips				OK	15.5%

Sidesway Web Buckling *Bearing Stiffeners NOT required*

$(d_c/t_w)/(l/b_f)$	2.15917249		R_{allow}	1559.816291	kips	OK	6.30%

Compression Buckling of the Web *Stiffeners NOT required*

$(4100t_{wc}^3\sqrt{(F_{yc})})/P_{bf}$	92.35814282	in				OK	12.14%

~~Stiffener Design~~

$h_{stiffener}$	N/A	in	$w_{stiffener}$	14.885	in	$Cont_{web}$	20.125	in

~~Stiffener Axial~~

(Kl/r)	#VALUE!		C_c	106.9445464				
F_a	#VALUE!	ksi	P_{allow}	#VALUE!	kips		#VALUE!	#VALUE!

~~Weld Design~~

l_{weld}	50.4	in	R_w	1.949404762	kip/in	t_{weld}	0.131299573	in

Engineering Calculation Sheet

Project: I-91 NB/SB Bridges, Hartford By: AJT Date: 3/4/2015

Project #: 5514001

Title: Slide / Erection Falsework Design

Footing Loads **Reference**

For leg loads of 98.25 k and 37.2 kips, calculate load on crane mat footings and footing beam

q_{max} = 23.5 k/ft.

By iteration, load varies linearly along 11.69 ft. Reactions are 97.6 kips and 39.8 kips
Reactions are within 1% of leg loads, OK.

M_{max} =	139.5	ft*k
V_{max} =	75.1	kips
R_{max} =	98.3	kips

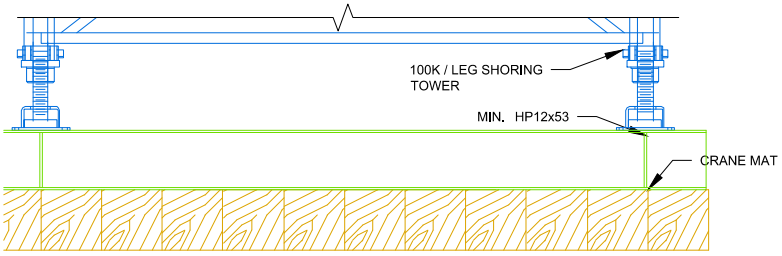

Crane Mat Checks

Mixed Oak No. 2
Load Duration Adjustment Factor = 1.15
Uniform Loading on crane mats = (23.5k/ft)/(1/2)(15 ft) = 3.13k/ft/ft

M_{max} =	19.2	ft*k	
$F_b = 6M/bd^2$	800.0	psi	< (1000psi)(1.15), OK
V_{max} =	12.5	kips	
$F_v = 3V/2bd$	130.2	psi	< (155 psi)(1.15), OK
R_{max} =	23.5	kips	
P/A =	134.3	psi	< 800 psi, OK

Soil Bearing Capacity Req'd: 3200 psf

Loading on HP grade beam under shoring tower

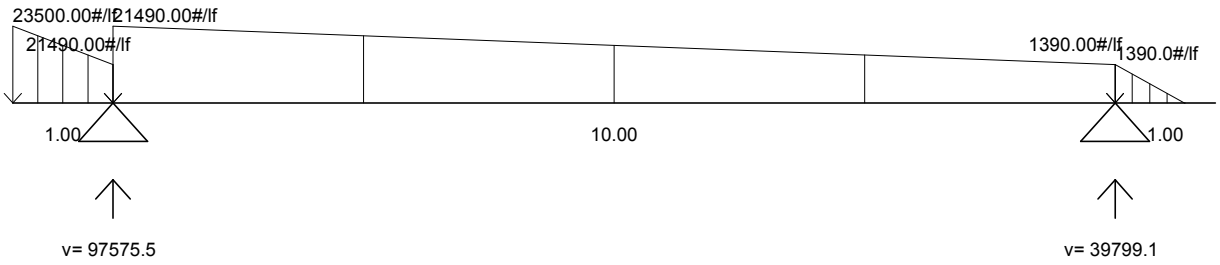

V

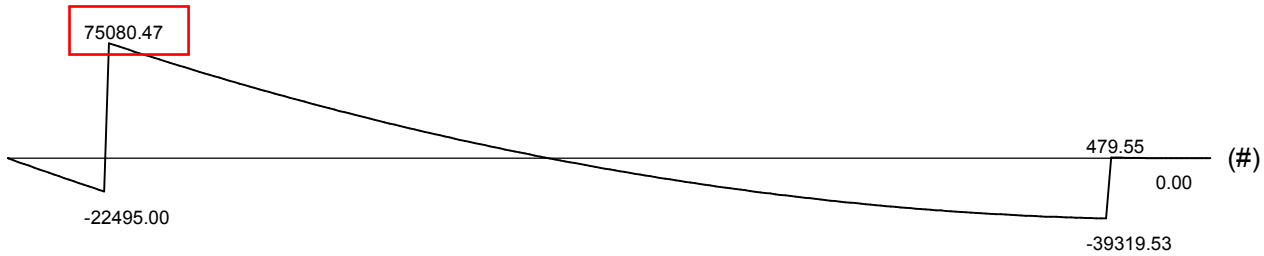

(#)

M

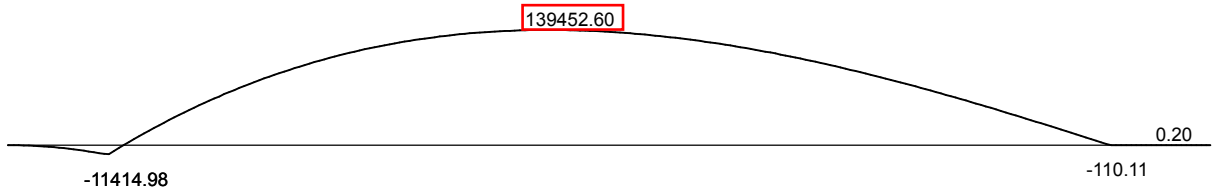

(ft-#)

D

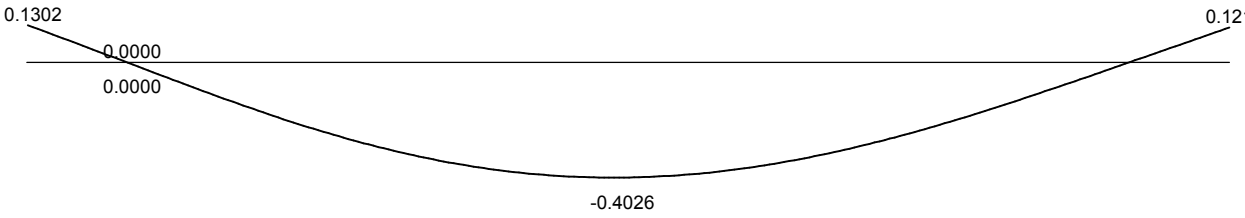

(in)

INPUT FILE NAME ====> N:\District Office\Engineering\01 TIG Tampa Active Projects\5514001 - I-91 Hartford\50 Superst
DATE ====> 3/16/2015 8:37:24 AM
COMMENTS ====>
====>
====>
====>

Project:	I-91 Hartford	By:	AJT
Project #:	5514001	Check By:	
Title:	Falsework Grade Beam		
Date:	2/23/2015	Date	

M_x	139.5	ft-kip	L_b	10	ft	C_B	1
M_y	3.5	ft-kip	L_x	10	ft	K_x	1
V	75.1	kip	L_y	0	ft	K_y	1
R	98.25	kip	a	6	in	C_{mx}	1
P	0	kip	T	0	kip	C_{my}	1
N	4	in	F	98.25	kip	Load	Interior
$t_{stiffener}$	3/8	in					

Section:	HP12x53	F_y =	50	ksi	F_u =	65	ksi	
A	15.5	in^2	k	1.125	in	X_2*10^6	3650	1/ksi
d	11.78	in	$b_f/2t_f$	13.8		I_x	393	in^4
t_w	0.435	in	h/t_w	22.3		S_x	66.8	in^3
b_f	12.045	in	r_T	3.2	in	r_x	5.03	in
t_f	0.435	in	X_1	2500	ksi	I_y	127	in^4
S_y	21.1	in^3	d_c	9.53	in	Z_y	32.2	in^3
r_y	2.86	in	Z_x	74	in^3	E	29000	ksi

Section Classification

Webs	Compact	Flange	Slender	

Flexure

L_c	10.78832816	ft					
F_{bx}	30	ksi	M_x	167	ft-kip	OK	83.5%
F_{by}	29.35481605	ksi	M_y	51.61555155	ft-kip	OK	6.8%

Shear

F_v	20	ksi	V_{allow}	102.486	kip	OK	73.3%

Axial

(Kl/r)	23.85685885		C_c	106.9987902			
F_a	27.87888691	ksi	P_{allow}	432.1227472	kips	OK	0.0%

Combined Stresses

f_a	0	ksi	f_{bx}	25.05988024	ksi		
f_{by}	1.990521327	ksi	f_t	0	ksi		
F_t	30	ksi	F'_{ex}	262.3763169	ksi		
F'_{ey}	0	ksi					
Axial Compression and Bending:				0.903138362		OK	90.3%
AxialTension and Bending:				0.903138362		OK	90.3%

Special Design Considerations (Concentrated Loads) ***Stiffeners required***

Local Flange Bending *Stiffeners required*

P_{bf}	163.75	kips	t_{min}	0.723878443	in	NG	166.4%

Local Web Yielding *Bearing Stiffeners NOT required*

F_{allow}	23.46618898	ksi				OK	71.1%

Web Crippling *Bearing Stiffeners NOT required*

R_{allow}	182.3198054	kips				OK	53.9%

Sidesway Web Buckling *Bearing Stiffeners NOT required*

$(d_c/t_w)/(l/b_f)$	2.199020115		R_{allow}	303.1323173	kips	OK	32.41%

Compression Buckling of the Web *Stiffeners NOT required*

$(4100t_{wc}^3\sqrt{(F_{yc})})/P_{bf}$	14.57321329	in				OK	65.39%

Stiffener Design

$h_{stiffener}$	5.455	in	$w_{stiffener}$	12.045	in	$Cont_{web}$	10.875	in

Stiffener Axial

(Kl/r)	2.244769266		C_c	106.9445464			
F_a	29.85242624	ksi	P_{allow}	276.0603116	kips	OK	35.59%

Weld Design

l_{weld}	43.64	in	R_w	2.251374885	kip/in	t_{weld}	0.15163837	in

Loading on crane mats

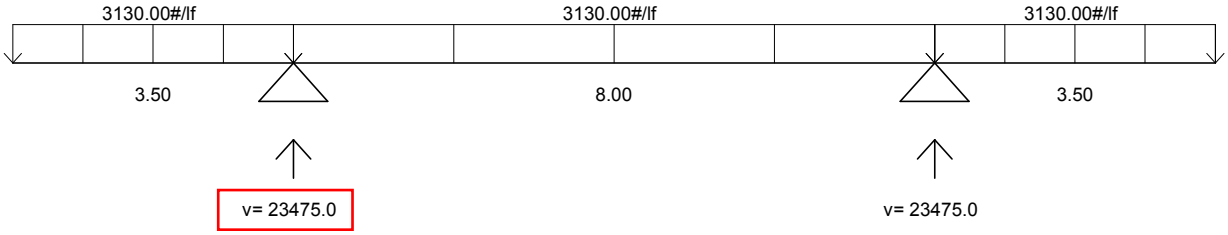

V

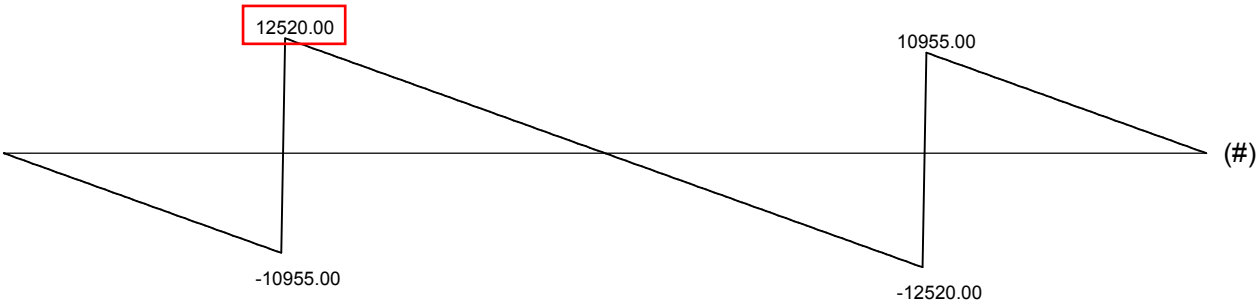

(#)

M

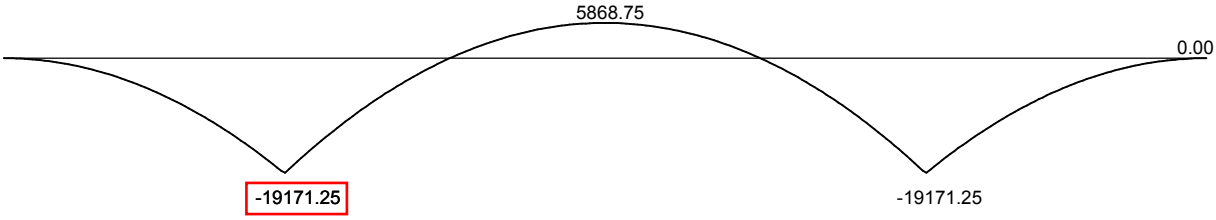

(ft-#)

D

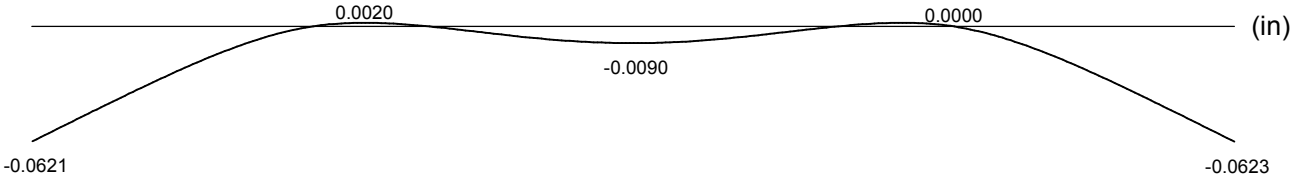

(in)

INPUT FILE NAME ====> N:\District Office\Engineering\01 TIG Tampa Active Projects\5514001 - I-91 Hartford\50 Superst
DATE ====> 3/16/2015 8:48:49 AM
COMMENTS ====>
====>
====>
====>

Engineering Calculation Sheet

Project: I-91 NB/SB Bridges, Hartford By: AJT Date: 3/4/2015

Project #: 5514001

Title: Slide / Erection Falsework Design

Pipe Support Design **Reference**

Maximum Axial load = 304.4 kips, use 305 kips

Maximum Height of post is 19 ft.

Use 200T jacks on top of pipes, 400k > 305 kips, OK

For a jack diameter of 9", circumference is (3.14)(9), 28.26 in.

For a 1" thick plate, shear area is 28.26 in^2

f_v = 305 k / 28.26 in^2
= 10.79 ksi

F_v = 0.4fy
For grade 36 plate, F_v = 14.4 ksi 10.79 < 14.4, OK

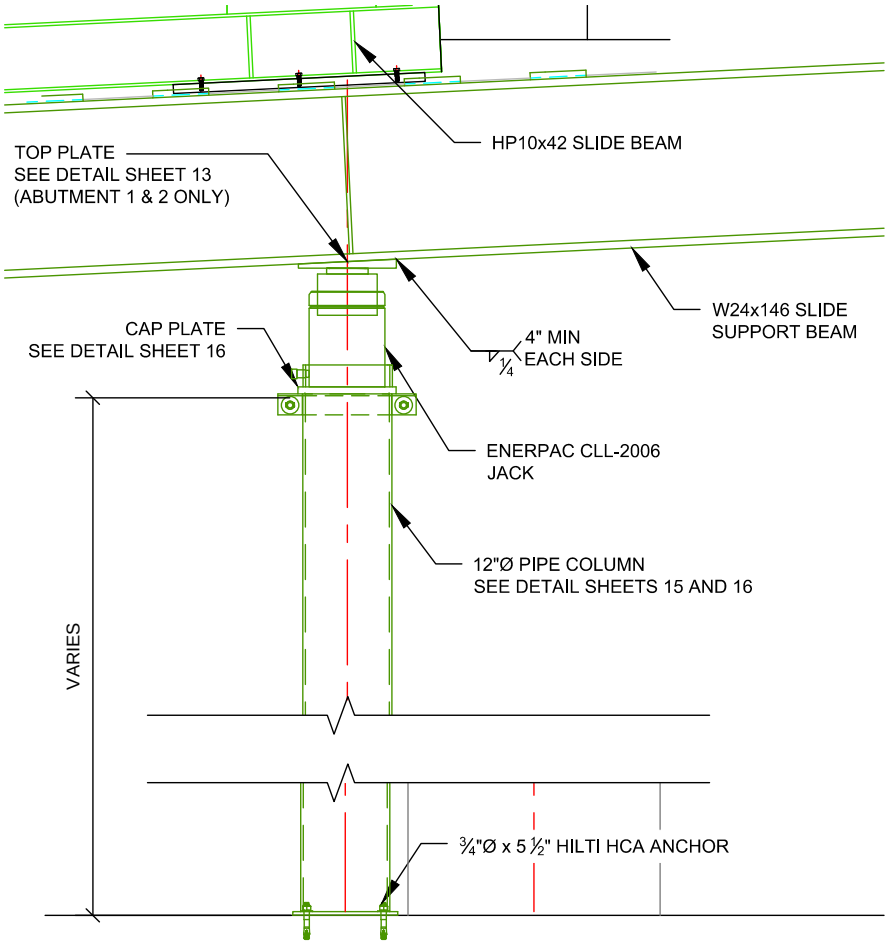

PIPE DESIGN, ASD STEEL DESIGN (AISC 9TH EDITION)

Project	Hartford	By:	AJT	Date:	2/26/2015
Project#	5514001	Check By:		Date:	
Title:	Falsework Pipe				

M_x	0	ft-kip	L_b	18.75	ft	C_b	1
M_y	0	ft-kip				k	1
P	318	kip				C_m	1

Section:	12 SCH80	F_y	35	ksi	F_u	58	ksi	
A	19.2	in^2	I	362	in^4	E	29000	ksi
OD	12.75	in	Z	70.2	in^3			
t	0.465	in	S	53.2	in^3			
			r	4.35	in			
			J	678				

Section Classification (B5.1)

Flexural	Compact	Axial	Compact	

Flexure (F1)

F_{bx}	23.10	ksi	M_{xallow}	102.41	ft-kip	OK	0.0%
F_{by}	23.10	ksi	M_{yallow}	102.41	ft-kip	OK	0.0%

Axial (E2)

(Kl/r)	51.72		C_c	127.89			
F_a	17.75	ksi	P_{allow}	340.83	kip	OK	93.3%

Combined Stress (H1, H2, H3)

f_a	16.56	ksi	f_{bx}	0.00	ksi		
			f_{by}	0.00	ksi		
			F'_e	55.82	ksi		
Axial Compression and Bending:			0.933	H1-1		OK	93.3%

Engineering Calculation Sheet

Project: I-91 NB/SB Bridges, Hartford By: AJT Date: 3/4/2015

Project #: 5514001

Title: Slide / Erection Falsework Design

Single Pipe Support Footing **Reference**

Maximum axial load is 175.01 kips, use 176 kips for design.

For leg loads of 176 kips, calculate load on crane mat footings and footing beam

Assume load is spread evenly across 12' W12x120 into crane mat footing

q_{max} =176 kips / 12'
= 14.67 k/ft.

V_{max} = 176k/2 = 88 kips

M_{max} = (14.6k/ft)(7.5 ft)(3.75ft) = 411 k*ft

Use W12x120

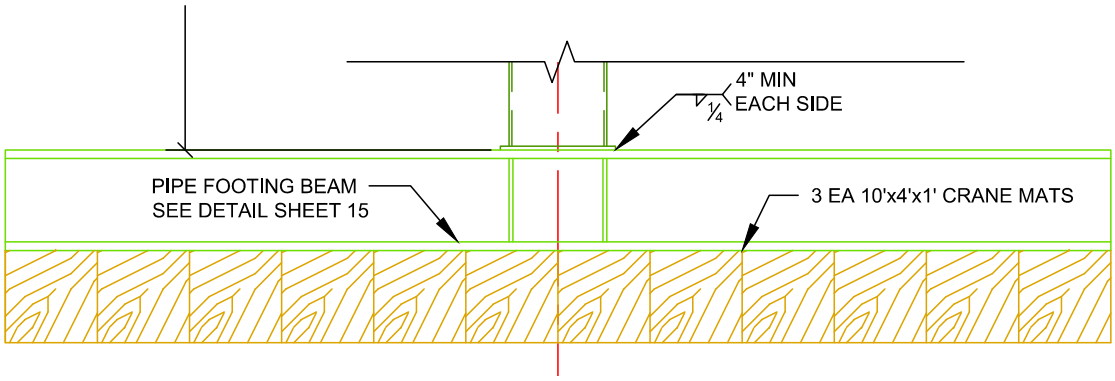

Project:	I-91 Hartford	By:	AJT	Date:	2/23/2015
Project #:	5514001	Check By:		Date	
Title:	Single Pipe Support Grade Beam				

M_x	411	ft-kip	L_b	5	ft	C_B	1
M_y	10.3	ft-kip	L_x	5	ft	K_x	1
V	88	kip	L_y	0	ft	K_y	1
R	176	kip	a	6	in	C_{mx}	1
P	0	kip	T	0	kip	C_{my}	1
N	5	in	F	176	kip	Load	Interior
$t_{stiffener}$	3/8	in					

Section:	W12x120	F_y =	50	ksi	F_u =	65	ksi	
A	35.3	in^2	k	1.8125	in	X_2*10^6	184	1/ksi
d	13.12	in	$b_f/2t_f$	5.6		I_x	1070	in^4
t_w	0.71	in	h/t_w	13.7		S_x	163	in^3
b_f	12.32	in	r_T	3.38	in	r_x	5.51	in
t_f	1.105	in	X_1	5240	ksi	I_y	345	in^4
S_y	56	in^3	d_c	9.495	in	Z_y	85.4	in^3
r_y	3.13	in	Z_x	186	in^3	E	29000	ksi

Section Classification

Webs	Compact	Flange	Compact

Flexure

L_c	11.03463702	ft					
F_{bx}	33	ksi	M_x	448.25	ft-kip	OK	91.7%
F_{by}	37.5	ksi	M_y	175	ft-kip	OK	5.9%

Shear

F_v	20	ksi	V_{allow}	186.304	kip	OK	47.2%

Axial

(Kl/r)	10.8892922		C_c	106.9987902			
F_a	29.17880388	ksi	P_{allow}	1030.011777	kips	OK	0.0%

Combined Stresses

f_a	0	ksi		f_{bx}	30.25766871	ksi	
f_{by}	2.207142857	ksi		f_t	0	ksi	
F_t	30	ksi		F'_{ex}	1259.36567	ksi	
F'_{ey}	0	ksi					
Axial Compression and Bending:				0.975756195		OK	97.6%
AxialTension and Bending:				0.975756195		OK	97.6%

Special Design Considerations (Concentrated Loads) ***Stiffeners NOT required***

Local Flange Bending *Stiffeners NOT required*

P_{bf}	293.3333333	kips	t_{min}	0.968848113	in	OK	87.7%

Local Web Yielding *Bearing Stiffeners NOT required*

F_{allow}	17.62754304	ksi				OK	53.4%

Web Crippling *Bearing Stiffeners NOT required*

R_{allow}	476.9130081	kips				OK	36.9%

Sidesway Web Buckling *Bearing Stiffeners NOT required*

$(d_c/t_w)/(l/b_f)$	2.745971831		R_{allow}	N/A	kips	OK	0.00%

Compression Buckling of the Web *Stiffeners NOT required*

$(4100t_{wc}^3\sqrt{(F_{yc})})/P_{bf}$	35.37386285	in				OK	26.84%

Stiffener Design

$h_{stiffener}$	N/A	in	$w_{stiffener}$	12.32	in	$Cont_{web}$	17.75	in

Stiffener Axial

(Kl/r)	#VALUE!		C_c	106.9445464				
F_a	#VALUE!	ksi	P_{allow}	#VALUE!	kips		#VALUE!	#VALUE!

Weld Design

l_{weld}	43.64	in	R_w	4.03299725	kip/in	t_{weld}	0.271637183	in

Project:	I-91 Hartford	By:	AJT	Date:	2/23/2015
Project #:	5514001	Check By:		Date	
Title:	Single Pipe Support Grade Beam				

Timber Mat Foundation - Symmetrical (Per CalTrans Falsework Manual)

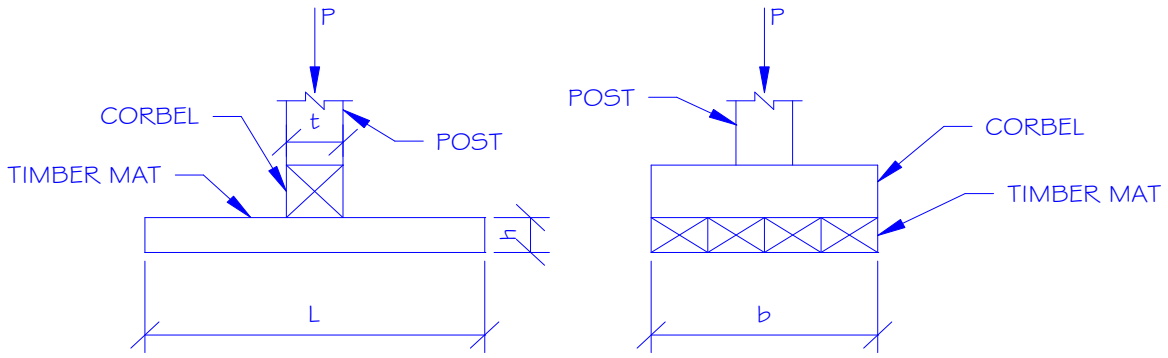

Timber Mat Geomtery:

L:	10.00	ft
b:	12.00	ft
h:	12	in.
t:	12	in.

Corbel Geometry:

Length:	12.00	ft
b:	144	in.
d:	12	in.
$A_{BEARING}$:	1728	in^2

Load:

Axial Load, P:	176	kips
F_b =	1150	lbs/in^2
F_{cperp} =	625	lbs/in^2
F_v =	155	lbs/in^2
$q_{allowable}$ =	4000	lbs/ft^2

Timber Mat Properties

A:	120.00	ft^2
S:	3456.00	in^3
L_H =	3.50	ft.

Timber Mat Effective Length:

$$L_{SYM} = \frac{t}{12} + \frac{F_b S}{1500P}$$

L_{SYM} =	16.05	ft.
0.8 L_e =	12.84	ft.
Actual Length =	10.00	ft.
Limiting Length =	10.00	ft.

Soil Pressure:

$$q = \frac{P}{A}$$

q = 1467 lbs/ft^2

Bearing Capacity is Adequate

Mudsill Horizontal Shear Stress:

V = 61600 lbs.

f_v = 53 lbs/in^2

Horizontal Shear Capacity is Adequate

Corbel Properties:

w:	14667	lbs/ft
S:	3456.0	in^3
A:	1728	in^2
L_H =	4.50	ft.
L_f =	5.75	ft.

Compression Perpendicular to Grain:

f_{cperp} = 102 lbs/in^2

Bearing Capacity is Adequate

Corbel Horizontal Shear Stress:

V = 66000 lbs

f_v = 57 lbs/in^2

Horizontal Shear Capacity is Adequate

Corbel Bending Stress:

M = 242458 ft-lbs

f_b = 842 lbs/in^2

Bending Capacity is Adequate

Corbel previously checked

Software licensed to	Job No	Sheet No 1	Rev
	Part		
Job Title	Ref		
	By	Date 27-Feb-15	Chd
Client	File Hartford Slide Beam.std	Date/Time 05-Mar-2015 10:35	

Beam End Forces Envelope

Sign convention is as the action of the joint on the beam.

Beam	Node	Envelope	Fx (kip)	Fy (kip)	Fz (kip)	Mx (kip-ft)	My (kip-ft)	Mz (kip-ft)
148	160	+ve	175.012	0.000	0.000	0.000	0.000	0.000
			28:LOAD	32:LOAD	40:LOAD	-	4:LOAD G	71:LOAD
			0.000	-0.000	-0.000	0.000	-0.000	-0.000
			-	70:LOAD	297:LOAD	-	21:LOAD	14:LOAD
	1191	-ve	175.012	0.000	0.000	0.000	0.000	0.000
			28:LOAD	32:LOAD	40:LOAD	-	-	-
			0.000	-0.000	-0.000	0.000	0.000	0.000
			-	70:LOAD	297:LOAD	-	-	-
149	157	+ve	311.190	0.000	0.000	0.000	0.000	0.000
			42:LOAD	32:LOAD	-	-	-	71:LOAD
			-10.034	-0.000	0.000	0.000	0.000	-0.000
			2:LOAD G	70:LOAD	-	-	-	14:LOAD
	1188	-ve	311.190	0.000	0.000	0.000	0.000	0.000
			42:LOAD	32:LOAD	-	-	-	-
			-10.034	-0.000	0.000	0.000	0.000	0.000
			2:LOAD G	70:LOAD	-	-	-	-
150	158	+ve	256.309	0.000	0.000	0.000	0.000	0.000
			74:LOAD	32:LOAD	-	-	-	70:LOAD
			-34.627	-0.000	0.000	0.000	0.000	-0.000
			27:LOAD	69:LOAD	-	-	-	26:LOAD
	1189	-ve	256.309	0.000	0.000	0.000	0.000	0.000
			74:LOAD	32:LOAD	-	-	-	-
			-34.627	-0.000	0.000	0.000	0.000	0.000
			27:LOAD	69:LOAD	-	-	-	-
151	159	+ve	292.658	0.000	0.000	0.000	0.000	0.000
			73:LOAD	31:LOAD	-	-	-	70:LOAD
			-10.184	-0.000	0.000	0.000	0.000	-0.000
			42:LOAD	69:LOAD	-	-	-	74:LOAD
	1190	-ve	292.658	0.000	0.000	0.000	0.000	0.000
			73:LOAD	31:LOAD	-	-	-	-
			-10.184	-0.000	0.000	0.000	0.000	0.000
			42:LOAD	69:LOAD	-	-	-	-
152	153	+ve	113.117	0.000	0.000	0.000	0.000	0.000
			74:LOAD	32:LOAD	-	-	-	69:LOAD
			-12.610	-0.000	0.000	0.000	0.000	-0.000
			58:LOAD	70:LOAD	-	-	-	52:LOAD
	1184	-ve	113.117	0.000	0.000	0.000	0.000	0.000
			74:LOAD	32:LOAD	-	-	-	-
			-12.610	-0.000	0.000	0.000	0.000	0.000
			58:LOAD	70:LOAD	-	-	-	-

Maximum load on pipe support between abutment and shoring towers.

Software licensed to	Job No	Sheet No 2	Rev
	Part		
Job Title	Ref		
	By	Date 27-Feb-15	Chd
Client	File Hartford Slide Beam.std	Date/Time 05-Mar-2015 10:35	

Beam End Forces Envelope Cont...

Beam	Node	Envelope	Fx (kip)	Fy (kip)	Fz (kip)	Mx (kip-ft)	My (kip-ft)	Mz (kip-ft)
153	165	+ve	165.472	0.000	0.000	0.000	0.000	0.000
			101:LOAD	90:LOAD	114:LOAD	-	297:LOAD	125:LOAD
			0.000	-0.000	-0.000	0.000	-0.000	-0.000
			-	148:LOAD	297:LOAD	-	84:LOAD	147:LOAD
	1196	-ve	165.472	0.000	0.000	0.000	0.000	0.000
			101:LOAD	90:LOAD	114:LOAD	-	-	-
			0.000	-0.000	-0.000	0.000	0.000	0.000
			-	148:LOAD	297:LOAD	-	-	-
154	166	+ve	311.206	0.000	0.000	0.000	0.000	0.000
			116:LOAD	90:LOAD	-	-	-	130:LOAD
			-10.152	-0.000	0.000	0.000	0.000	-0.000
			76:LOAD	148:LOAD	-	-	-	128:LOAD
	1197	-ve	311.206	0.000	0.000	0.000	0.000	0.000
			116:LOAD	90:LOAD	-	-	-	-
			-10.152	-0.000	0.000	0.000	0.000	0.000
			76:LOAD	148:LOAD	-	-	-	-
155	167	+ve	274.105	0.000	0.000	0.000	0.000	0.000
			148:LOAD	90:LOAD	-	-	-	146:LOAD
			-31.660	-0.000	0.000	0.000	0.000	-0.000
			100:LOAD	148:LOAD	-	-	-	99:LOAD
	1198	-ve	274.105	0.000	0.000	0.000	0.000	0.000
			148:LOAD	90:LOAD	-	-	-	-
			-31.660	-0.000	0.000	0.000	0.000	0.000
			100:LOAD	148:LOAD	-	-	-	-
156	168	+ve	290.386	0.000	0.000	0.000	0.000	0.000
			147:LOAD	106:LOAD	-	-	-	130:LOAD
			-12.237	-0.000	0.000	0.000	0.000	-0.000
			116:LOAD	148:LOAD	-	-	-	146:LOAD
	1199	-ve	290.386	0.000	0.000	0.000	0.000	0.000
			147:LOAD	106:LOAD	-	-	-	-
			-12.237	-0.000	0.000	0.000	0.000	0.000
			116:LOAD	148:LOAD	-	-	-	-
157	169	+ve	113.415	0.000	0.000	0.000	0.000	0.000
			148:LOAD	105:LOAD	-	-	-	132:LOAD
			-12.450	-0.000	0.000	0.000	0.000	-0.000
			132:LOAD	148:LOAD	-	-	-	125:LOAD
	1200	-ve	113.415	0.000	0.000	0.000	0.000	0.000
			148:LOAD	105:LOAD	-	-	-	-
			-12.450	-0.000	0.000	0.000	0.000	0.000
			132:LOAD	148:LOAD	-	-	-	-

Software licensed to	Job No	Sheet No 3	Rev
	Part		
Job Title	Ref		
	By	Date 27-Feb-15	Chd
Client	File Hartford Slide Beam.std	Date/Time 05-Mar-2015 10:35	

Beam End Forces Envelope Cont...

Beam	Node	Envelope	Fx (kip)	Fy (kip)	Fz (kip)	Mx (kip-ft)	My (kip-ft)	Mz (kip-ft)
158	174	+ve	166.442	0.000	0.000	0.000	0.000	0.000
			176:LOAD	174:LOAD	183:LOAD	-	169:LOAD	194:LOAD
			0.000	-0.000	-0.000	0.000	-0.000	-0.000
			-	222:LOAD	297:LOAD	-	297:LOAD	201:LOAD
	1205	-ve	166.442	0.000	0.000	0.000	0.000	0.000
			176:LOAD	174:LOAD	183:LOAD	-	-	-
			0.000	-0.000	-0.000	0.000	0.000	0.000
			-	222:LOAD	297:LOAD	-	-	-
159	175	+ve	317.946	0.000	0.000	0.000	0.000	0.000
			192:LOAD	173:LOAD	-	-	-	217:LOAD
			-10.497	-0.000	0.000	0.000	0.000	-0.000
			151:LOAD	222:LOAD	-	-	-	194:LOAD
	1206	-ve	317.946	0.000	0.000	0.000	0.000	0.000
			192:LOAD	173:LOAD	-	-	-	-
			-10.497	-0.000	0.000	0.000	0.000	0.000
			151:LOAD	222:LOAD	-	-	-	-
160	176	+ve	285.213	0.000	0.000	0.000	0.000	0.000
			222:LOAD	196:LOAD	-	-	-	200:LOAD
			-31.911	-0.000	0.000	0.000	0.000	-0.000
			175:LOAD	222:LOAD	-	-	-	173:LOAD
	1207	-ve	285.213	0.000	0.000	0.000	0.000	0.000
			222:LOAD	196:LOAD	-	-	-	-
			-31.911	-0.000	0.000	0.000	0.000	0.000
			175:LOAD	222:LOAD	-	-	-	-
161	177	+ve	297.400	0.000	0.000	0.000	0.000	0.000
			222:LOAD	175:LOAD	-	-	-	217:LOAD
			-12.562	-0.000	0.000	0.000	0.000	-0.000
			191:LOAD	221:LOAD	-	-	-	202:LOAD
	1214	-ve	297.400	0.000	0.000	0.000	0.000	0.000
			222:LOAD	175:LOAD	-	-	-	-
			-12.562	-0.000	0.000	0.000	0.000	0.000
			191:LOAD	221:LOAD	-	-	-	-
162	178	+ve	100.221	0.000	0.000	0.000	0.000	0.000
			222:LOAD	178:LOAD	-	-	-	222:LOAD
			-12.712	-0.000	0.000	0.000	0.000	-0.000
			207:LOAD	221:LOAD	-	-	-	216:LOAD
	1208	-ve	100.221	0.000	0.000	0.000	0.000	0.000
			222:LOAD	178:LOAD	-	-	-	-
			-12.712	-0.000	0.000	0.000	0.000	0.000
			207:LOAD	221:LOAD	-	-	-	-

Software licensed to	Job No	Sheet No 4	Rev
	Part		
Job Title	Ref		
	By	Date 27-Feb-15	Chd
Client	File Hartford Slide Beam.std	Date/Time 05-Mar-2015 10:35	

Beam End Forces Envelope Cont...

Beam	Node	Envelope	Fx (kip)	Fy (kip)	Fz (kip)	Mx (kip-ft)	My (kip-ft)	Mz (kip-ft)
163	183	+ve	174.190	0.000	0.000	0.000	0.000	0.000
			250:LOAD	238:LOAD	260:LOAD	-	297:LOAD	291:LOAD
			0.000	-0.000	-0.000	0.000	-0.000	-0.000
			-	293:LOAD	297:LOAD	-	255:LOAD	295:LOAD
	1209	-ve	174.190	0.000	0.000	0.000	0.000	0.000
			250:LOAD	238:LOAD	260:LOAD	-	-	-
			0.000	-0.000	-0.000	0.000	0.000	0.000
			-	293:LOAD	297:LOAD	-	-	-
164	184	+ve	315.032	0.000	0.000	0.000	0.000	0.000
			265:LOAD	248:LOAD	-	-	-	290:LOAD
			-10.396	-0.000	0.000	0.000	0.000	-0.000
			225:LOAD	296:LOAD	-	-	-	273:LOAD
	1212	-ve	315.032	0.000	0.000	0.000	0.000	0.000
			265:LOAD	248:LOAD	-	-	-	-
			-10.396	-0.000	0.000	0.000	0.000	0.000
			225:LOAD	296:LOAD	-	-	-	-
165	185	+ve	266.827	0.000	0.000	0.000	0.000	0.000
			296:LOAD	253:LOAD	-	-	-	292:LOAD
			-34.616	-0.000	0.000	0.000	0.000	-0.000
			249:LOAD	292:LOAD	-	-	-	251:LOAD
	1218	-ve	266.827	0.000	0.000	0.000	0.000	0.000
			296:LOAD	253:LOAD	-	-	-	-
			-34.616	-0.000	0.000	0.000	0.000	0.000
			249:LOAD	292:LOAD	-	-	-	-
166	186	+ve	300.912	0.000	0.000	0.000	0.000	0.000
			296:LOAD	248:LOAD	-	-	-	291:LOAD
			-10.360	-0.000	0.000	0.000	0.000	-0.000
			264:LOAD	294:LOAD	-	-	-	236:LOAD
	1210	-ve	300.912	0.000	0.000	0.000	0.000	0.000
			296:LOAD	248:LOAD	-	-	-	-
			-10.360	-0.000	0.000	0.000	0.000	0.000
			264:LOAD	294:LOAD	-	-	-	-
167	187	+ve	105.087	0.000	0.000	0.000	0.000	0.000
			296:LOAD	247:LOAD	-	-	-	292:LOAD
			-12.880	-0.000	0.000	0.000	0.000	-0.000
			280:LOAD	291:LOAD	-	-	-	270:LOAD
	1211	-ve	105.087	0.000	0.000	0.000	0.000	0.000
			296:LOAD	247:LOAD	-	-	-	-
			-12.880	-0.000	0.000	0.000	0.000	0.000
			280:LOAD	291:LOAD	-	-	-	-

Project:	I-91 Hartford	By:	AJT
Project #:	5514001	Check By:	
Title:	Single Pipe support		
Date:	2/23/2015	Date	

M_x	411	ft-kip	L_b	10	ft	C_B	1
M_y	10.3	ft-kip	L_x	10	ft	K_x	1
V	88	kip	L_y	0	ft	K_y	1
R	176	kip	a	6	in	C_{mx}	1
P	0	kip	T	0	kip	C_{my}	1
N	5	in	F	176	kip	Load	Interior
$t_{stiffener}$	3/8	in					

Section:	W12x120	F_y =	50	ksi	F_u =	65	ksi		
A	35.3	in^2	k	1.8125	in	X_2*10^6	184	1/ksi	
d	13.12	in	$b_f/2t_f$	5.6		I_x	1070	in^4	
t_w	0.71	in	h/t_w	13.7		S_x	163	in^3	
b_f	12.32	in	r_T	3.38	in	r_x	5.51	in	
t_f	1.105	in	X_1	5240	ksi	I_y	345	in^4	
S_y	56	in^3	d_c	9.495	in	Z_y	85.4	in^3	
r_y	3.13	in	Z_x	186	in^3	E	29000	ksi	

Section Classification

Webs	Compact	Flange	Compact

Flexure

L_c	11.03463702	ft						
F_{bx}	33	ksi	M_x	448.25	ft-kip		OK	91.7%
F_{by}	37.5	ksi	M_y	175	ft-kip		OK	5.9%

Shear

F_v	20	ksi	V_{allow}	186.304	kip		OK	47.2%

Axial

(Kl/r)	21.77858439		C_c	106.9987902				
F_a	28.10904721	ksi	P_{allow}	992.2493667	kips		OK	0.0%

Combined Stresses

f_a	0	ksi		f_{bx}	30.25766871	ksi		
f_{by}	2.207142857	ksi		f_t	0	ksi		
F_t	30	ksi		F'_{ex}	314.8414174	ksi		
F'_{ey}	0	ksi						
Axial Compression and Bending:				0.975756195			OK	97.6%
AxialTension and Bending:				0.975756195			OK	97.6%

Special Design Considerations (Concentrated Loads) ***Stiffeners NOT required***

Local Flange Bending *Stiffeners NOT required*

P_{bf}	293.3333333	kips	t_{min}	0.968848113	in		OK	87.7%

Local Web Yielding *Bearing Stiffeners NOT required*

F_{allow}	17.62754304	ksi					OK	53.4%

Web Crippling *Bearing Stiffeners NOT required*

R_{allow}	476.9130081	kips					OK	36.9%

Sidesway Web Buckling *Bearing Stiffeners NOT required*

$(d_c/t_w)/(l/b_f)$	1.372985915		R_{allow}	509.2481011	kips		OK	34.56%

Compression Buckling of the Web *Stiffeners NOT required*

$(4100t_{wc}^3\sqrt{(F_{yc})})/P_{bf}$	35.37386285	in					OK	26.84%

Stiffener Design

$h_{stiffener}$	N/A	in	$w_{stiffener}$	12.32	in	$Cont_{web}$	17.75	in

Stiffener Axial

(Kl/r)	#VALUE!		C_c	106.9445464				
F_a	#VALUE!	ksi	P_{allow}	#VALUE!	kips		#VALUE!	#VALUE!

Weld Design

l_{weld}	43.64	in	R_w	4.03299725	kip/in	t_{weld}	0.271637183	in

Engineering Calculation Sheet

Project: I-91 NB/SB Bridges, Hartford By: AJT Date: 3/4/2015

Project #: 5514001

Title: Slide / Erection Falsework Design

Slide Beam Design **Reference**

Slide beam will subject only to large concentrated loads. Bending is minor.
Size stiffeners for maximum reaction of 148 kips.

Slide Support Beam and Pour Support Beam Design

A pair of W24x68's will be used along with W10x49 columns to support the bridge during bridge deck placement.

A W24x146 will support the bridge during the slide.

Project:	I-91 Hartford	By:	AJT	Date:	2/23/2015
Project #:	5514001	Check By:		Date	
Title:	Slide Beam Stiffener Design				

M_x	0	ft-kip	L_b	10	ft	C_B	1
M_y	0	ft-kip	L_x	10	ft	K_x	1
V	74	kip	L_y	0	ft	K_y	1
R	148	kip	a	6	in	C_{mx}	1
P	0	kip	T	0	kip	C_{my}	1
N	4	in	F	148	kip	Load	Interior
$t_{stiffener}$	3/8	in					

Section:	HP10x42	F_y =	50	ksi	F_u =	65	ksi	
A	12.4	in^2	k	1.0625	in	X_2*10^6	1970	1/ksi
d	9.7	in	$b_f/2t_f$	12		I_x	210	in^4
t_w	0.415	in	h/t_w	18.9		S_x	43.4	in^3
b_f	10.075	in	r_T	2.69	in	r_x	4.13	in
t_f	0.42	in	X_1	2920	ksi	I_y	71.7	in^4
S_y	14.2	in^3	d_c	7.575	in	Z_y	21.8	in^3
r_y	2.41	in	Z_x	48.3	in^3	E	29000	ksi

Section Classification

Webs	Compact	Flange	Noncompact

Flexure

L_c	9.023861039	ft					
F_{bx}	30	ksi	M_x	108.5	ft-kip	OK	0.0%
F_{by}	30	ksi	M_y	35.5	ft-kip	OK	0.0%

Shear

F_v	20	ksi	V_{allow}	80.51	kip	OK	91.9%

Axial

(Kl/r)	29.05569007		C_c	106.9987902			
F_a	27.26875256	ksi	P_{allow}	338.1325317	kips	OK	0.0%

Combined Stresses

f_a	0	ksi	f_{bx}	0	ksi		
f_{by}	0	ksi	f_t	0	ksi		
F_t	30	ksi	F'_{ex}	176.8840871	ksi		
F'_{ey}	0	ksi					
Axial Compression and Bending:				0		OK	0.0%
AxialTension and Bending:				0		OK	0.0%

Special Design Considerations (Concentrated Loads) — ***Stiffeners required***

Local Flange Bending — *Stiffeners required*

P_{bf}	246.6666667	kips	t_{min}	0.888444333	in	NG	211.5%

Local Web Yielding — *Bearing Stiffeners required*

F_{allow}	38.29546373	ksi				NG	116.0%

Web Crippling — *Bearing Stiffeners NOT required*

R_{allow}	183.1793627	kips				OK	80.8%

Sidesway Web Buckling — *Bearing Stiffeners NOT required*

$(d_c/t_w)/(l/b_f)$	1.53249247		R_{allow}	151.1714284	kips	OK	97.90%

Compression Buckling of the Web — *Stiffeners NOT required*

$(4100t_{wc}^3\sqrt{(F_{yc})})/P_{bf}$	8.400452569	in				OK	90.17%

Stiffener Design

$h_{stiffener}$	4.43	in	$w_{stiffener}$	10.075	in	$Cont_{web}$	10.375	in

Stiffener Axial

(Kl/r)	2.228012228		C_c	106.9445464			
F_a	29.85357116	ksi	P_{allow}	241.3288058	kips	OK	61.33%

Weld Design

l_{weld}	35.44	in	R_w	4.176072235	kip/in	t_{weld}	0.281273808	in

Project:	I-91 Hartford	By:	AJT	Date:	2/23/2015
Project #:	5514001	Check By:		Date	
Title:	Pour Support Beam				

M_x	199	ft-kip	L_b	5	ft	C_B	1
M_y	5	ft-kip	L_x	15.5	ft	K_x	1
V	87.5	kip	L_y	0	ft	K_y	1
R	87.5	kip	a	6	in	C_{mx}	1
P	0	kip	T	0	kip	C_{my}	1
N	5	in	F	87.5	kip	Load	Interior
$t_{stiffener}$	3/8	in					

Section:	W24x68	F_y =	50	ksi	F_u =	65	ksi	
A	20.1	in^2	k	1.375	in	X_2*10^6	29000	1/ksi
d	23.73	in	$b_f/2t_f$	7.7		I_x	1830	in^4
t_w	0.415	in	h/t_w	52		S_x	154	in^3
b_f	8.965	in	r_T	2.26	in	r_x	9.55	in
t_f	0.585	in	X_1	1590	ksi	I_y	70.4	in^4
S_y	15.7	in^3	d_c	20.98	in	Z_y	24.5	in^3
r_y	1.87	in	Z_x	177	in^3	E	29000	ksi

Section Classification

Webs	Compact		Flange	Compact	

Flexure

L_c	7.366940582	ft					
F_{bx}	33	ksi	M_x	423.5	ft-kip	OK	47.0%
F_{by}	37.5	ksi	M_y	49.0625	ft-kip	OK	10.2%

Shear

F_v	20	ksi	V_{allow}	196.959	kip	OK	44.4%

Axial

(Kl/r)	19.47643979		C_c	106.9987902			
F_a	28.35455229	ksi	P_{allow}	569.9265011	kips	OK	0.0%

Combined Stresses

f_a	0	ksi		f_{bx}	15.50649351	ksi	
f_{by}	3.821656051	ksi		f_t	0	ksi	
F_t	30	ksi		F'_{ex}	393.669717	ksi	
F'_{ey}	0	ksi					
Axial Compression and Bending:				0.571804571		OK	57.2%
AxialTension and Bending:				0.571804571		OK	57.2%

Special Design Considerations (Concentrated Loads) ***Stiffeners required***

Local Flange Bending *Stiffeners required*

P_{bf}	145.8333333	kips	t_{min}	0.683130051	in	NG	116.8%

Local Web Yielding *Bearing Stiffeners NOT required*

F_{allow}	17.75523145	ksi				OK	53.8%

Web Crippling *Bearing Stiffeners NOT required*

R_{allow}	134.4588421	kips				OK	65.1%

Sidesway Web Buckling *Bearing Stiffeners NOT required*

$(d_c/t_w)/(l/b_f)$	7.55364257		R_{allow}	N/A	kips	OK	0.00%

Compression Buckling of the Web *Stiffeners required*

$(4100t_{wc}^3\sqrt{(F_{yc})})/P_{bf}$	14.20876549	in				NG	147.66%

Stiffener Design

$h_{stiffener}$	16.92	in	$w_{stiffener}$	8.965	in	$Cont_{web}$	10.375	in

Stiffener Axial

(Kl/r)	9.873628879		C_c	106.9445464			
F_a	29.26592632	ksi	P_{allow}	224.39649	kips	OK	38.99%

Weld Design

l_{weld}	90.24	in	R_w	0.969636525	kip/in	t_{weld}	0.065308583	in

F_y = 36 ksi

F_y = 50 ksi

COLUMNS
W shapes
Allowable axial loads in kips

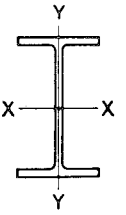

394 k > 145 k beam reaction, OK

Designation		W10											
Wt./ft		60		54		49		45		39		33	
F_y		36	50	36	50	36	50	36	50	36	50	36	50
Effective length in ft KL with respect to least radius of gyration r_y	0	380	528	341	474	311	432	287	399	248	345	210	291
	6	353	482	317	433	289	394	260	351	224	303	189	255
	7	348	472	312	423	284	385	253	340	218	293	184	246
	8	341	461	306	414	279	376	247	328	213	283	179	237
	9	335	450	300	403	273	367	240	316	206	272	173	228
	10	328	437	294	392	268	357	232	303	200	260	167	217
	11	321	425	288	381	262	346	224	289	193	248	161	207
	12	313	412	281	369	256	335	216	274	186	235	155	196
	13	306	398	274	356	249	324	208	259	178	221	149	184
	14	297	383	267	343	242	312	199	243	170	207	142	171
	15	289	368	259	330	235	299	190	227	162	193	135	159
	16	280	353	251	316	228	286	180	209	154	177	127	145
	17	271	337	243	301	221	273	170	191	145	161	120	131
	18	262	320	235	286	213	259	160	172	136	144	112	117
	19	253	303	226	271	205	245	149	154	126	130	103	105
	20	243	285	217	255	197	230	138	139	116	117	95	95
	22	222	248	199	221	180	198	115	115	97	97	78	78
	24	201	209	179	186	161	167	97	97	81	81	66	66
	26	177	178	158	159	142	143	82	82	69	69	56	56
	28	154	154	137	137	123	123	71	71	60	60	48	48
	30	134	134	119	119	107	107	62	62	52	52	42	42
	32	118	118	105	105	94	94	54	54	46	46	37	37
	33	111	111	99	99	88	88	51	51	43	43		
	34	104	104	93	93	83	83						
	36	93	93	83	83	74	74						
Properties													
U		2.55	2.55	2.56	2.56	2.57	2.57	3.25	3.25	3.28	3.28	3.35	3.35
P_{wo} (kips)		99	138	83	116	73	101	79	109	64	89	55	77
P_{wi} (kips/in.)		15	21	13	19	12	17	13	18	11	16	10	15
P_{wb} (kips)		239	282	163	193	127	149	138	163	101	119	79	93
P_{fb} (kips)		104	145	85	118	71	98	86	120	63	88	43	59
L_c (ft)		10.6	9.0	10.6	9.0	10.6	9.0	8.5	7.2	8.4	7.2	8.4	7.1
L_u (ft)		31.1	22.4	28.2	20.3	26.0	18.7	22.8	16.4	19.8	14.2	16.5	11.9
A (in.^{2})		17.6		15.8		14.4		13.3		11.5		9.71	
I_x (in.^{4})		341		303		272		248		209		170	
I_y (in.^{4})		116		103		93.4		53.4		45.0		36.6	
r_y (in.)		2.57		2.56		2.54		2.01		1.98		1.94	
Ratio r_x/r_y		1.71		1.71		1.71		2.15		2.16		2.16	
B_x } Bending		0.264		0.263		0.264		0.271		0.273		0.277	
B_y } factors		0.765		0.767		0.770		1.000		1.018		1.055	
$a_x/10^6$		50.5		45.0		40.6		37.2		31.2		25.4	
$a_y/10^6$		17.3		15.4		13.8		8.0		6.7		5.4	
F'_{ex} $(K_x L_x)^2/10^2$ (kips)		200		198		196		194		189		182	
F'_{ey} $(K_y L_y)^2/10^2$ (kips)		68.5		68.0		66.9		41.9		40.7		39.0	

Note: Heavy line indicates Kl/r of 200.

Project:	I-91 Hartford	By:	AJT	Date:	2/23/2015
Project #:	5514001	Check By:		Date	
Title:	Slide Support Beam				

M_x	621	ft-kip	L_b	15.5	ft	C_B	1
M_y	15.6	ft-kip	L_x	15.5	ft	K_x	1
V	234	kip	L_y	0	ft	K_y	1
R	318	kip	a	6	in	C_{mx}	1
P	0	kip	T	0	kip	C_{my}	1
N	5	in	F	0	kip	Load	Interior
$t_{stiffener}$	3/8	in					

Section:	W24x146	F_y =	50	ksi	F_u =	65	ksi	
A	43	in^2	k	1.875	in	X_2*10^6	3420	1/ksi
d	24.74	in	$b_f/2t_f$	5.9		I_x	4580	in^4
t_w	0.65	in	h/t_w	33.2		S_x	371	in^3
b_f	12.9	in	r_T	3.43	in	r_x	10.3	in
t_f	1.09	in	X_1	2590	ksi	I_y	391	in^4
S_y	60.5	in^3	d_c	20.99	in	Z_y	93.2	in^3
r_y	3.01	in	Z_x	418	in^3	E	29000	ksi

Section Classification

Webs	Compact	Flange	Compact	

Flexure

L_c	11.5541248	ft					
F_{bx}	30	ksi	M_x	927.5	ft-kip	OK	67.0%
F_{by}	37.5	ksi	M_y	189.0625	ft-kip	OK	8.3%

Shear

F_v	20	ksi	V_{allow}	321.62	kip	OK	72.8%

Axial

(Kl/r)	18.05825243		C_c	106.9987902			
F_a	28.50075258	ksi	P_{allow}	1225.532361	kips	OK	0.0%

Combined Stresses

f_a	0	ksi	f_{bx}	20.08625337	ksi		
f_{by}	3.094214876	ksi	f_t	0	ksi		
F_t	30	ksi	F'_{ex}	457.9306519	ksi		
F'_{ey}	0	ksi					
Axial Compression and Bending:				0.752054176		OK	75.2%
AxialTension and Bending:				0.752054176		OK	75.2%

Special Design Considerations (Concentrated Loads) ***Stiffeners required***

Local Flange Bending *Stiffeners required*

P_{bf}	530	kips	t_{min}	1.302305648	in	NG	119.5%

Local Web Yielding *Bearing Stiffeners required*

F_{allow}	34.03344482	ksi				NG	103.1%

Web Crippling *Bearing Stiffeners NOT required*

R_{allow}	334.0503375	kips				OK	95.2%

Sidesway Web Buckling *Bearing Stiffeners NOT required*

$(d_c/t_w)/(l/b_f)$	2.239627792		R_{allow}	475.3888077	kips	OK	66.89%

Compression Buckling of the Web *Stiffeners required*

$(4100t_{wc}^3\sqrt{(F_{yc})})/P_{bf}$	15.02218338	in				NG	139.73%

Stiffener Design

$h_{stiffener}$	16.92	in	$w_{stiffener}$	12.9	in	$Cont_{web}$	16.25	in

Stiffener Axial

(Kl/r)	8.106831435		C_c	106.9445464			
F_a	29.41309973	ksi	P_{allow}	452.9617359	kips	OK	70.20%

Weld Design

l_{weld}	90.24	in	R_w	3.52393617	kip/in	t_{weld}	0.237350049	in

Maximum reaction applied, Stiffeners required at reaction points

Project:	I-91 Hartford	By:	AJT	Date:	2/23/2015
Project #:	5514001	Check By:		Date	
Title:	Slide Support Beam				

M_x	621	ft-kip	L_b	15.5	ft	C_B	1
M_y	15.6	ft-kip	L_x	15.5	ft	K_x	1
V	234	kip	L_y	0	ft	K_y	1
R	0	kip	a	6	in	C_{mx}	1
P	0	kip	T	0	kip	C_{my}	1
N	5	in	F	148	kip	Load	Interior
$t_{stiffener}$	3/8	in					

Section:	W24x146	F_y =	50	ksi	F_u =	65	ksi	
A	43	in^2	k	1.875	in	X_2*10^6	3420	1/ksi
d	24.74	in	$b_f/2t_f$	5.9		I_x	4580	in^4
t_w	0.65	in	h/t_w	33.2		S_x	371	in^3
b_f	12.9	in	r_T	3.43	in	r_x	10.3	in
t_f	1.09	in	X_1	2590	ksi	I_y	391	in^4
S_y	60.5	in^3	d_c	20.99	in	Z_y	93.2	in^3
r_y	3.01	in	Z_x	418	in^3	E	29000	ksi

Section Classification

Webs	Compact	Flange	Compact

Flexure

L_c	11.5541248	ft					
F_{bx}	30	ksi	M_x	927.5	ft-kip	OK	67.0%
F_{by}	37.5	ksi	M_y	189.0625	ft-kip	OK	8.3%

Shear

F_v	20	ksi	V_{allow}	321.62	kip	OK	72.8%

Axial

(Kl/r)	18.05825243		C_c	106.9987902			
F_a	28.50075258	ksi	P_{allow}	1225.532361	kips	OK	0.0%

Combined Stresses

f_a	0	ksi	f_{bx}	20.08625337	ksi		
f_{by}	3.094214876	ksi	f_t	0	ksi		
F_t	30	ksi	F'_{ex}	457.9306519	ksi		
F'_{ey}	0	ksi					
Axial Compression and Bending:				0.752054176		OK	75.2%
AxialTension and Bending:				0.752054176		OK	75.2%

Special Design Considerations (Concentrated Loads) ***Stiffeners NOT required***

Local Flange Bending *Stiffeners NOT required*

P_{bf}	246.6666667	kips	t_{min}	0.888444333	in	OK	81.5%

Local Web Yielding *Bearing Stiffeners NOT required*

F_{allow}	15.83946488	ksi				OK	48.0%

Web Crippling *Bearing Stiffeners NOT required*

R_{allow}	334.0503375	kips				OK	44.3%

Sidesway Web Buckling *Bearing Stiffeners NOT required*

$(d_c/t_w)/(l/b_f)$	2.239627792		R_{allow}	475.3888077	kips	OK	31.13%

Compression Buckling of the Web *Stiffeners NOT required*

$(4100t_{wc}^3\sqrt{(F_{yc})})/P_{bf}$	32.27739402	in				OK	65.03%

~~Stiffener Design~~

$h_{stiffener}$	N/A	in	$w_{stiffener}$	12.9	in	$Cont_{web}$	16.25	in

~~Stiffener Axial~~

(Kl/r)	#VALUE!		C_c	106.9445464				
F_a	#VALUE!	ksi	P_{allow}	#VALUE!	kips		#VALUE!	#VALUE!

~~Weld Design~~

l_{weld}	90.24	in	R_w	1.640070922	kip/in	t_{weld}	0.110464802	in

Maximum point load from slide beam applied, no stiffeners required.

Engineering Calculation Sheet

Project: I-91 NB/SB Bridges, Hartford By: AJT Date: 3/4/2015

Project #: 5514001

Title: Slide / Erection Falsework Design

Wind Loading on Falsework from Erected Girders **Reference**

Design coefficients for 80 mph basic wind speed:

Importance Factor = 1.0

Exposure Category = C

Exposure C Gust Factor = 1.27

Wind Force Coefficient = 1.3 (Assumed as only wind load on girder is considered)

K_z for 25 ft = 0.93

$q_z = 0.00256*K_{z*}(I*V)^2$

$= 0.00256*0.93_*(1.0*80)^2$

$=15.24$

$F_w = 15.24*A_t*G_h*C_f$

$= 15.24*A_t*1.27*1.3$

$=25.16*A_t$ use 26 psf

Maximum Girder Height = 52.5 in (SB Bridge)

Barrier wall and deck height = 4'-10"

Bridge Length = 134'-8"

Wind Load on completed Structure = (25.16 psf)(134'-8")(4'-10"+4.375')

= 32.44 kips

= 16.22 kips per side, Use 17 kips for design.

Since 17 kips / 797 k reaction per end is 2.1%, use 2.5% of vertical load as horizontal load in member design

As slide will not take place in 80 mph winds, horizontal load from slide and wind are not considered to act on falsework simultaneously.

Engineering Calculation Sheet

Project: I-91 NB/SB Bridges, Hartford By: AJT Date: 3/4/2015

Project #: 5514001

Title: Slide / Erection Falsework Design

Horizontal Load on Falsework from Slide System **Reference**

Maximum bridge weight = 1,518 kips

with 5% additional, 1594 kips, 797 kips per end

At 0.1 for static coefficient of friction, load to overcome is

= (797 kips)(0.1)

= 79.7 kips (Conservative for friction, experience has shown 0.04 to 0.05 is realistic)

Use 50T Jacks, 100k >79.7 kips, OK. F.O.S. = 1.25

For SB Bridge track is to be sloped at 5.2%. Load to be resisted is

= (797 kips)(0.052)

= 41.45 kips 41.45<79.7, design load. Use 80 k for design load on both bridges

Since system is stiff along slide direction, assume lateral load transfers to 4 slide beam support points.

80 kips / 4 EA = 20 kips horizontal load per support. Conservative as self weight and friction is ignored.

For 1/4" Fillet Welds, minimum distance required :

Fw = 0.707*(70 ksi)*(0.3)*(1/4)

= 3.7 k/in.

20 kips / 3.7 k/in = 5.4 in. Use 8 in. min. 8> 5.4, OK

Engineering Calculation Sheet

PCL CONSTRUCTION

Project: I-91 NB/SB Bridges, Hartford By: AJT Date: 3/4/2015
Project #: 5514001
Title: Slide System Design

Slide System Loads **Reference**

Maximum Wind Load: 17 kips per end of bridge

Maximum Sliding Load: 79.7 kips, use 80 kips per end of bridge

Backstop on Horizontal Jack

Use 2" wide by 1" plate welded to slide support beam.

Use a minimum 5/16" Fillet Weld

t_w = 0.3125 in
F_w = 0.707*0.3*70ksi*t_w
4.6397 k/in. Use 4.63 for design.

With 80 kips total reaction split between two reaction points, weld must resist 40 kips

Required length = 8.62 in Min.

Use 6" min per side for a total of 12". 12>8.62, OK

Jack Reaction Frame

Thread reaction frame to match collar threads on top of jack.

Pullout load on threaded connection:

P = 3.14 (dm)(Fs)(L)/3 NASA Fastener Design Manual

d_m = 4.937 pitch diameter of threads, in. Machinery Handbook
F_s = 14.4 Yield shear stress, ksi
L = 2 Length of thread engagement, in.
P = 148.820928 kips

Pullout greater than capacity of jack, 100k, OK

Since edges of jack are close to reactions points, bending is minor in reaction frame.

Shear area in Collar Plate = (2 in)(7 in)(2 EA) = 28 in^2
Shear area in Reaction plate = (2 in)(8 in)(2 EA) = 32 in^2

Required area to resist 80 kips at 14.4 ksi (Grade 36) = 80/14.4 =5.6
28, 32 >> 5.6, OK

Engineering Calculation Sheet

Project: I-91 NB/SB Bridges, Hartford By: AJT Date: 3/4/2015
Project #: 5514001
Title: Slide System Design

Front Jack Connection **Reference**

Allowable double shear in 1 1/4" Dia. A490 bolt, threads excluded from shear plane = 98.2 k

98.2>80, OK

From Table J3.2, allowable bearing stress is 40 ksi.

Required bearing area = 80 k / 39 ksi
= 2.05 in^2
For 1 1/4" length, thickness required = 1.64 in

Use 1" pl with 3/8" boss plates, total thickness is 1.75"
1.75>1.64, OK

Size required welds for 80 kips

Use 1/4" fillet weld
t_w = 0.2500 in
F_w = 0.707*0.3*70ksi*t_w
3.7118 k/in. Use 4.7 for design.

Required length = 21.55 in Min.

Use 6" min per side for a total of 24". 24>21.55, OK

Pullout load on threaded front jack connection:

NASA Fastener Design Manual

P = 3.14 (dm)(Fs)(L)/3

Machinery Handbook

d_m = 0.9353 pitch diameter of threads, in.
F_s = 14.4 Yield shear stress, ksi
L = 1 Length of thread engagement, in.
P = 14.0968416 kips

Pull of system is limited to 15 kips, conservative as jack base material is likely greater than Grade 36.
Pull of system is limited to load required to reset jack. OK

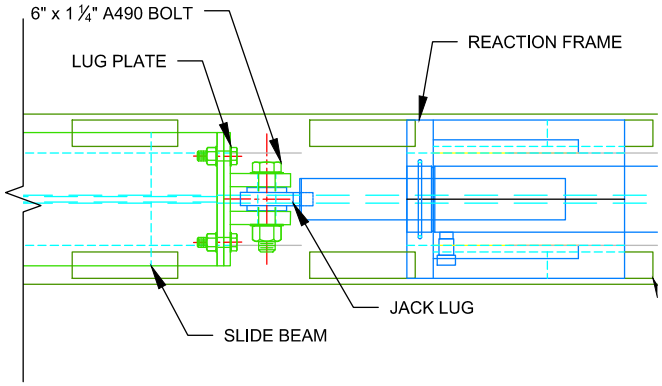

Pin Connected Lifting Lug Design, ASME BTH-1-2008

Project	Hartford	By:	AJT	Date:	3/4/2015
Project#	5514001				
Title:	Horizontal Jack Connection				

F.S.	Design Category A		N_d = 2.00
P =	40	kips	
F_y =	36	ksi	
F_u =	50	ksi	
F_{yp} =	65	ksi (pin yield stress)	
b_e =	2	in.	
a =	2	in.	
Lug Width, b =	5.31	in.	
R=	2.66	in.	
Rounded Edge?	Yes		
Pin Rotates Under Load?	No	Large # of Cycles (>20,000)	
D_h	1.3125	in.	
D_p	1.25	in.	2T Allow Shackle
t	1	in.	
Load Angle	90	degrees from horizontal	

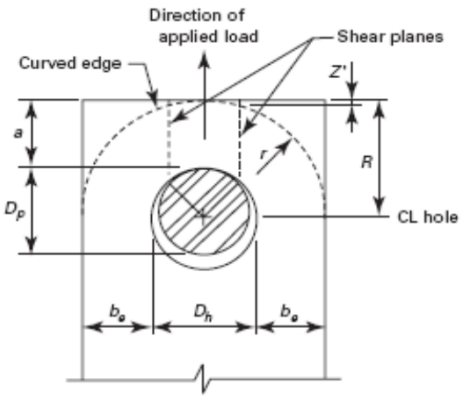

Fig. C3-3 Pin-Connected Plate Notation

Tensile Strength (3-3.3.1)

P_t	51.54	kips				OK	77.6%
b_{eff}	1.35	in.	C_r	0.916	in.		

Single Plane Fracture (3-3.3.1)

P_b	54.82	kips				OK	73.0%

Double Plane Shear (3-3.3.1)

P_v	64.08	kips	f	52.38	degrees	OK	62.4%
			Z'	0.047	in.		

Bearing Capacity of Lifting Lug (ASME Eqn. 3-53)

F_p	22.50	ksi	P_{allow}	28.13	kips	NG	142.2%

Add 3/8" plates to either side of main lug, thickness becomes 1.75. OK as 175% thicker plate is greater than 142.2%

Shear Capacity of Pin (ASME Eqn. 3-28)

F_v	18.76	ksi	P_{allow}	46.03	kips	OK	86.9%

Weld Design (3-3.4.1)

E_{xx}	70	ksi	P_y Allowable	76.36	kips	OK	52.4%
t_w	0.25	in.	P_x Allowable	44.13	kips	OK	0.1%
L_w	24	in.					
t_w Minimum	5/16	in. for fillet welds					
	5/16	in. for partial penetration groove welds					

Bending of Plate (3-2.3.3) (L_b of Plate Used For d)

L_b	5.3125	in.	F_b	22.5	ksi	OK	0.1%
Base to CL Pin	3.00	in.	f_b	0.02	ksi		

"WELDGRP.xls" Program
Version 2.3

Check of weld for horizontal reaction. Assume 6" length of weld, conservative

ECCENTRIC LOADS ON VERTICAL PARALLEL WELD GROUPS

Based on the Instantaneous Center of Rotation Method and Alternate Method 2
Using Table XIX from AISC 9th Ed. Manual (ASD) - page 4-75

Job Name:		Subject:			
Job Number:		Originator:		Checker:	

Input Data:

Vertical Weld Length =	6.000	in.
Spacing of Welds =	2.000	in.
Weld Size, ω =	5/16	in. = 5 (1/16's)
Vertical Load, Pv =	40.00	kips
Horizontal Load, Ph =	0.00	kips
Dist. from Pv to C.G. =	1.000	in.
Use Special Case?	Yes	

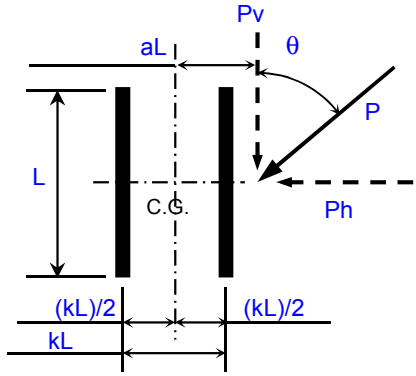

Nomenclature:

P = Pv = C*C1*D*L (for vertical load only)
P = allowable load on eccentric weld group (kips)
C = coefficient interpolated from Table XIX
C1 = coefficient for electrode, use 1.0 for E70XX
D = number of 1/16's of an inch (weld size)
L = vertical weld length

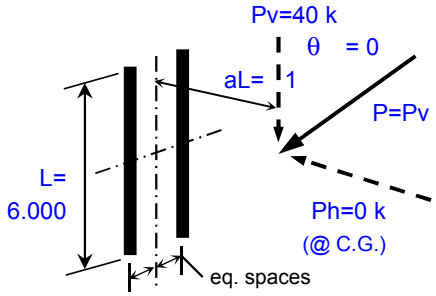

Special Case (out of plane) (Use C values for k=0)

Results:

(Note: AISC Alternate Method 2 is not used for P=Pv)

L =	6.000	in.	L = vertical weld length
kL =	2.000	in.	kL = spacing of vertical welds
aL =	1.000	in.	aL = dist. from Pv to C.G.
a =	0.167		a = (aL)/L
k =	0.000		k = 0 (for Special Case)
C1 =	1.0		C1 = 1.0 for E70XX electrode
C =	1.470		(interpolated from Table XIX, page 4-75)
P =	40.00	kips	P = SQRT(Pv^2+Ph^2)
Angle θ =	0.000	deg.	θ = 90-(ATAN(Pv/Ph))
Co =	N.A.		Co = C (from AISC Table XIX, page 4-75)
C(max) =	N.A.		C(max) = 0.928*(2)
A =	N.A.		A = C(max)/Co >= 1.0
Ca/Co =	N.A.		Ca/Co = A/(SINθ+A*COSθ) >= 1.0
Ca =	N.A.		Ca = (Ca/Co)*Co
D(req'd) =	4.535	1/16's	D(req'd) = P/(C*C1*L)
L(req'd) =	5.442	in.	L(req'd) = P/(C*C1*D)

Weld is adequate!
D(req'd) = 4.535 <= 5 (1/16's)
L(req'd) = 5.442 <= 6 in.

BOLTS, THREADED PARTS AND RIVETS
Shear
Allowable load in kips

TABLE I-D. SHEAR

	ASTM Designation	Connection Type[a]	Hole Type[b]	F_v ksi	Loading[c]	Nominal Diameter d, in.							
						⅝	¾	⅞	1	1⅛	1¼	1⅜	1½
						Area (Based on Nominal Diameter) in.^{2}							
						.3068	.4418	.6013	.7854	.9940	1.227	1.485	1.767
Bolts	A307	—	STD	10.0	S	3.1	4.4	6.0	7.9	9.9	12.3	14.8	17.7
			NSL		D	6.1	8.8	12.0	15.7	19.9	24.5	29.7	35.3
	A325	SC[a] Class A	STD	17.0	S	5.22	7.51	10.2	13.4	16.9	20.9	25.2	30.0
					D	10.4	15.0	20.4	26.7	33.8	41.7	50.5	60.1
			OVS, SSL	15.0	S	4.60	6.63	9.02	11.8	14.9	18.4	22.3	26.5
					D	9.20	13.3	18.0	23.6	29.8	36.8	44.6	53.0
			LSL	12.0	S	3.68	5.30	7.22	9.42	11.9	14.7	17.8	21.2
					D	7.36	10.6	14.4	18.8	23.9	29.4	35.6	42.4
		N	STD, NSL	21.0	S	6.4	9.3	12.6	16.5	20.9	25.8	31.2	37.1
					D	12.9	18.6	25.3	33.0	41.7	51.5	62.4	74.2
		X	STD, NSL	30.0	S	9.2	13.3	18.0	23.6	29.8	36.8	44.5	53.0
					D	18.4	26.5	36.1	47.1	59.6	73.6	89.1	106.0
	A490	SC[a] Class A	STD	21.0	S	6.44	9.28	12.6	16.5	20.9	25.8	31.2	37.1
					D	12.9	18.6	25.3	33.0	41.7	51.5	62.4	74.2
			OVS, SSL	18.0	S	5.52	7.95	10.8	14.1	17.9	22.1	26.7	31.8
					D	11.0	15.9	21.6	28.3	35.8	44.2	53.5	63.6
			LSL	15.0	S	4.60	6.63	9.02	11.8	14.9	18.4	22.3	26.5
					D	9.20	13.3	18.0	23.6	29.8	36.8	44.6	53.0
		N	STD, NSL	28.0	S	8.6	12.4	16.8	22.0	27.8	34.4	41.6	49.5
					D	17.2	24.7	33.7	44.0	55.7	68.7	83.2	99.0
		X	STD, NSL	40.0	S	12.3	17.7	24.1	31.4	39.8	49.1	59.4	70.7
					D	24.5	35.3	48.1	62.8	79.5	98.2	119.0	141.0
Rivets	A502-1	—	STD	17.5	S	5.4	7.7	10.5	13.7	17.4	21.5	26.0	30.9
					D	10.7	15.5	21.0	27.5	34.8	42.9	52.0	61.8
	A502-2 A502-3	—	STD	22.0	S	6.7	9.7	13.2	17.3	21.9	27.0	32.7	38.9
					D	13.5	19.4	26.5	34.6	43.7	54.0	65.3	77.7
Threaded Parts	A36 (F_u=58 ksi)	N	STD	9.9	S	3.0	4.4	6.0	7.8	9.8	12.1	14.7	17.5
					D	6.1	8.7	11.9	15.6	19.7	24.3	29.4	35.0
		X	STD	12.8	S	3.9	5.7	7.7	10.1	12.7	15.7	19.0	22.6
					D	7.9	11.3	15.4	20.1	25.4	31.4	38.0	45.2
	A572, Gr. 50 (F_u=65 ksi)	N	STD	11.1	S	3.4	4.9	6.7	8.7	11.0	13.6	16.5	19.6
					D	6.8	9.8	13.3	17.4	22.1	27.2	33.0	39.2
		X	STD	14.3	S	4.4	6.3	8.6	11.2	14.2	17.5	21.2	25.3
					D	8.8	12.6	17.2	22.5	28.4	35.1	42.5	50.5
	A588 (F_u=70 ksi)	N	STD	11.9	S	3.7	5.3	7.2	9.3	11.8	14.6	17.7	21.0
					D	7.3	10.5	14.3	18.7	23.7	29.2	35.3	42.1
		X	STD	15.4	S	4.7	6.8	9.3	12.1	15.3	18.9	22.9	27.2
					D	9.4	13.6	18.5	24.2	30.6	37.8	45.7	54.4

[a]SC = Slip critical connection.
N: Bearing-type connection with threads *included* in shear plane.
X: Bearing-type connection with threads *excluded* from shear plane.
[b]STD: Standard round holes (d + 1/16 in.)
LSL: Long-slotted holes normal to load direction
NSL: Long-or short-slotted hole normal to load direction (required in bearing-type connection).
OVS: Oversize round holes
SSL: Short-slotted holes
[c]S: Single shear D: Double shear.
For threaded parts of materials not listed, use $F_v = 0.17F_u$ when threads are included in a shear plane, and $F_v = 0.22F_u$ when threads are excluded from a shear plane.
To fully pretension bolts 1⅛-in. dia. and greater, special impact wrenches may be required.
When bearing-type connections used to splice tension members have a fastener pattern whose length, measured parallel to the line of force, exceeds 50 in., tabulated values shall be reduced by 20%. See AISC ASD Commentary Sect. J3.4.

NASA Reference Publication 1228

1990

Fastener Design Manual

Richard T. Barrett
Lewis Research Center
Cleveland, Ohio

NASA
National Aeronautics and Space Administration
Office of Management
Scientific and Technical Information Division

The margin of safety[12] for a fastener from figure 31 is

$$MS = \frac{1}{R_S^x + R_T^y} - 1$$

depending on which curve is used. However, note that $R_S^x + R_T^y < 1$ is a requirement for a positive margin of safety. This formula also illustrates why high torque should not be applied to a bolt when the dominant load is shear.

The margin of safety is calculated for *both* yield and ultimate material allowables, with the most critical value controlling the design. A material with a low yield will be critical for yield stress, and a material with a high yield will normally be critical for ultimate stress.

Calculating Pullout Load for Threaded Hole

In many cases a bolt of one material may be installed in a tapped hole in a different (and frequently lower strength) material. If the full strength of the bolt is required, the depth of the tapped hole must be determined for the weaker material by using the formula

$$\boxed{P = \frac{\pi d_m F_s L}{3}}$$

where

P pullout load, lb

d_m mean diameter of threaded hole, in. (≈ pitch diameter of threads)

F_s material ultimate or yield shear stress

L length of thread engagement, in.

The ⅓ factor is empirical. If the threads were perfectly mated, this factor would be ½, since the total cylindrical shell area of the hole would be split equally between the bolt threads and the tapped hole threads. The ⅓ is used to allow for mismatch between threads.

Further information on required tapped hole lengths is given in reference 19.

Calculating Shank Diameter for "Number" Fastener

The shank diameter for a "number" fastener is calculated from

$$\text{Diameter} = 0.060 + 0.013\ N$$

where N is the number (4, 6, 8, 10, 12) of the fastener. For example, the shank diameter of a no. 8 fastener is

$$\text{Diameter} = 0.060 + 0.013(8) = 0.164 \text{ in.}$$

Fastener Groups in Bearing (Shear Loading)

Whenever possible, bolts in shear should have a higher shear strength than the bearing yield strength of the materials they go through. Since the bolts have some clearance and position tolerances in their respective holes, the sheet material must yield in bearing to allow the bolt pattern to load all of the bolts equally at a given location in the pattern. Note that the sloppier the hole locations, the more an individual bolt must carry before the load is distributed over the pattern.

Bolts and rivets should not be used together to carry a load, since the rivets are usually installed with an interference fit. Thus, the rivets will carry all of the load until the sheet or the rivets yield enough for the bolts to pick up some load. This policy also applies to bolts and dowel pins (or roll pins) in a pattern, since these pins also have interference fits.

Fastener Edge Distance and Spacing

Common design practice is to use a nominal edge distance of $2D$ from the fastener hole centerline, where D is the fastener diameter. The minimum edge distance should not be less than $1.5D$. The nominal distance between fasteners is $4D$, but the thickness of the materials being joined can be a significant factor. For thin materials, buckling between fasteners can be a problem. A wider spacing can be used on thicker sheets, as long as sealing of surfaces between fasteners is not a problem.

Approximate Bearing and Shear Allowables

In the absence of specific shear and bearing allowables for materials, the following approximations may be used:

$$\text{Alloy and carbon steels: } F_{su} = 0.6\ F_{tu}$$

$$\text{Stainless steels: } F_{su} = 0.55\ F_{tu}$$

where F_{su} is ultimate shear stress and F_{tu} is ultimate tensile stress. Since bearing stress allowables are empirical to begin with, the bearing allowable for any given metallic alloy may be approximated as follows:

$$F_{bu} = 1.5\ F_{tu}$$

$$F_{by} = 1.5\ F_{ty}$$

where F_{bu} is ultimate bearing stress, F_{by} is yield bearing stress, and F_{ty} is tensile yield stress.

[12]Margin of safety is defined as

$$\frac{\text{Allowable load (Stress)}}{\text{Actual load (Stress)} \times \text{Safety factor}} - 1$$

Engineering Calculation Sheet

Project: I-91 NB/SB Bridges, Hartford By: AJT Date: 3/4/2015

Project #: 5514001

Title: Slide System Design

Slide Beam Restraint **Reference**

During beam erection and reset of jacks on SB structure, sliding beam will be restrained against movement with steel "stops."

Required resistance on SB, sloped, slide beam is 45.7 kips. Include 17 kip wind load.

Required resistance is 62.7 kips. For a minimum of two stops, assume one stop takes 75% of the load, 48 kips.

With a stop on each side of the slide track, each stop must resist 24 kips.

Assuming grade 36 steel, allowable shear in a rectangular plate is $0.4F_y$, 14.4 ksi

24 kips / 13.5 ksi = 1.8 in^2, use 2 in^2 min.

Use a 1" Thick, 2 1/4" Wide plate

2.25 > 1.8, OK

To connect to HP10x42 slide beam, use a pair of 1" plates, welded to top and bottom flanges

Load is applied 5" from the cl of the web

M_{max} = (24 k)*(5 in)

120.0 in*k

V_{max} = 24.0 k

Using grade 36 steel, assume $F_b = 0.6F_y$

F_b =	21.6	ksi
Sx required =	5.6	in^3
Sx of 1"x 6" pl =	6.0	in^3
M/S =	20.0	ksi
	20<21.6, OK	
Fv = 0.4*Fy =	18	ksi
Area of pl=	6	in^2
V/A =	4.0	ksi
	6.7 < 18, OK	

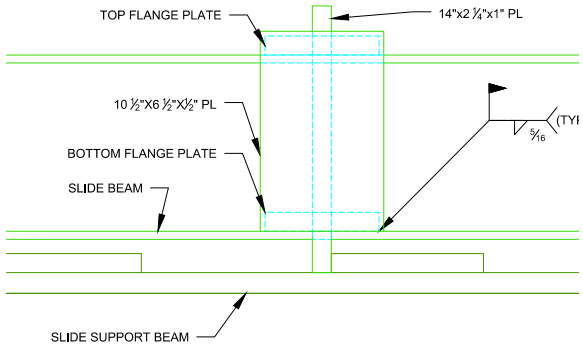

As alternate 'stop' during erection, size A325 bolts.

For 48 kips per stop, two bolts at each, 24 kips shear capacity required

Allowable shear in 1 1/4" A325 bolts is 25.8 k

25.8 k > 24 k, OK

"WELDGRP.xls" Program
Version 2.3

Check weld between 1" plate and flange of HP10x42

WELD GROUP ANALYSIS

Using the Elastic Method for up to 24 Total Welds

Job Name:		Subject:			
Job Number:		Originator:		Checker:	

Input Data:

Number of Welds, Nw = 2

Weld Coordinates:

	Start		End	
	X1 (in.)	Y1 (in.)	X2 (in.)	Y2 (in.)
Weld #1	0.000	0.000	4.500	0.000
Weld #2	0.000	6.000	4.500	6.000

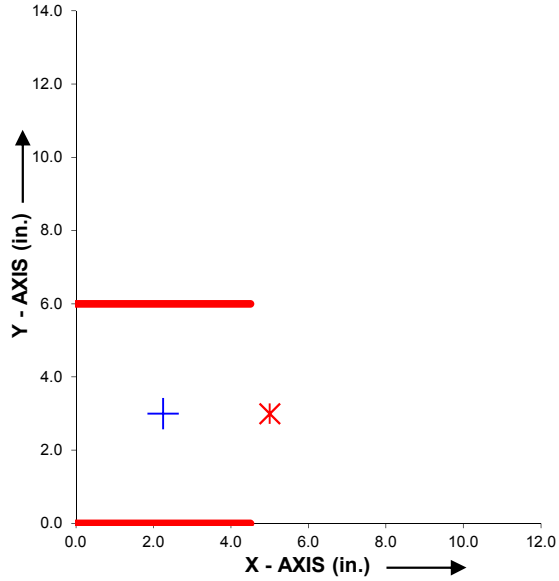

WELD GROUP PLOT

No. of Load Points = 1

Load Point Data:

	Point #1			
X-Coordinate (in.) =	5.000			
Y-Coordinate (in.) =	3.000			
Z-Coordinate (in.) =	2.250			
Axial Load, Pz (k) =	0.00			
Shear Load, Px (k) =	0.00			
Shear Load, Py (k) =	24.00			
Moment, Mx (in-k) =	0.00			
Moment, My (in-k) =	0.00			
Moment, Mz (in-k) =	0.00			

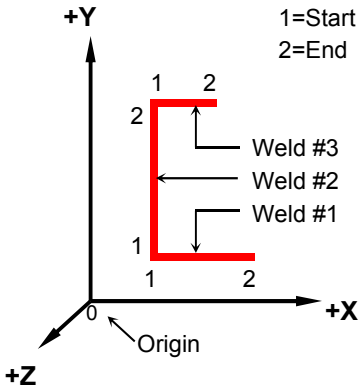

NOMENCLATURE

(continued)

"WELDGRP.xls" Program
Version 2.3

Results:

Weld Group Properties:

Lw =	9.000	in.
Xc =	2.250	in.
Yc =	3.000	in.
Ix =	81.00	in^3
Iy =	15.19	in^3
J =	96.19	in^3

Σ Loads @ C.G. of Weld Group:

Σ Pz =	0.00	kips
Σ Px =	0.00	kips
Σ Py =	24.00	kips
Σ Mx =	-54.00	in-k
Σ My =	0.00	in-k
Σ Mz =	66.00	in-k

	Weld Forces (k/in.)	
	Fw(1)	Fw(2)
Weld #1	3.082	5.096
Weld #2	3.082	5.096

Required E70XX Weld Size:

Fw(max) =	5.096	kips/in.
Fillet (leg) =	0.343	in.
Throat (eff) =	0.243	in.

Use 5/16" fillet

Engineering Calculation Sheet

Project: I-91 NB/SB Bridges, Hartford By: AJT Date: 3/4/2015

Project #: 5514001

Title: Slide System Design

Slide Beam PTFE Connection **Reference**

PTFE to be connected to slide beam with threaded cap screws into PTFE.

Design slide load is 80 kips. PTFE is set under all six beams. Assume design slide load is shared between only two beams. Conservative.

80 kips / 2 EA = 40 kips

Use a minimum Grade 8 bolt (150 ksi tensile strength)

Shear stress = $0.6F_y$, 90 ksi

For 1/2" dia. Bolt, root area = 0.1257 In^2

Allowable shear = 0.1257 in^2 * 90 ksi = 11.31 kips

Use 6 EA 1/2" Grade 8 Cap Screws, Coarse Thread (UNC)

(6)(11.31 kips) = 67.8 kips, 67.8 > 40, OK

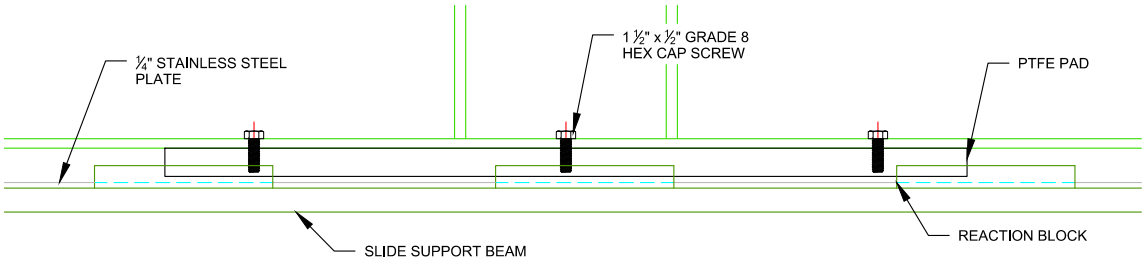

SLIDE SURFACE DETAIL

Portland Bolt
& MANUFACTURING COMPANY
Established 1912
(800) 547-6758
sales@portlandbolt.com

Bolt Shear Strength Considerations

What is the shear strength of carbon steel bolts?

First, unlike tensile and yield strengths, there are no published shear strength values or requirements for ASTM specifications. The Industrial Fastener Institute (Inch Fastener Standards, 7th ed. 2003. B-8) states that shear strength is approximately 60% of the minimum tensile strength.

> *"As an empirical guide, shear strengths of carbon steel fasteners may be assumed to be approximately 60 percent of their specified minimum tensile strengths. For example, an SAE grade 5 hex cap screw has a specified minimum tensile strength of 120,000 psi. Therefore, for design purposes, its shear strength could be reasonably assumed to be 70,000 psi."*

Quick Tip: For instructions on how to calculate the strength for your bolt, see Calculating Yield and Tensile Strength.

It is important to understand that some imported fasteners, like lag screws, are typically ungraded. Since they are not manufactured to any specific grade, it is impossible to determine any strength characteristics associated with them unless you have them strength tested at a laboratory. For applications where shear will occur in the unthreaded portion the nominal diameter should be used to calculate the value. Whereas, if the shear area is in the threaded section the minor diameter should be used.

AISC provides published values for ASTM A325 and A490 structural bolts listed in *Specifications for Structural Steel Buildings* under Table J3.2 (16.1-104).

Although, the Strength by Grade Chart has no shear strength information, it shows the strength requirements of common ASTM and SAE grade construction fastener specifications.

Share

Written August 7, 2007 by

Greg Lindsay
Phone: 800.599.0565
Email: greg@portlandbolt.com

14 comments

Herb
April 24, 2008 at 4:58 am
When a bolt is used in a sheer load is it better to use grade 5 or grade 8? I've heard that grade 8 bolts are harder and therfore more brittle. Assuming a good fit with no slop in the assembly or a slightly loose fit – say 25-30 thousandths

McMASTER-CARR. OVER 555,000 PRODUCTS
(562) 692-5911
(562) 695-2323 (fax)
la.sales@mcmaster.com
Text 75930

High-Strength Grade 8 Steel Cap Screw

1/2"-13 Fully Threaded, 1-1/2" Long, Zinc-Plated

In stock
$8.31 per pack of 10
92620A716

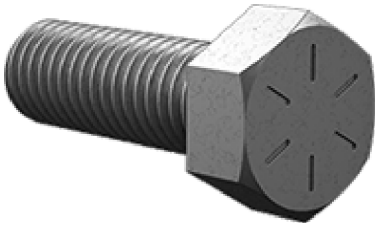

Material	Steel
Grade	8
Finish	Zinc Yellow-Chromate Plated
Thread Size	1/2"-13
Head Width	3/4"
Head Height	11/32"
Screw Size	1/2" (0.500")
Length	1 1/2"
Thread Length	Full
RoHS	Compliant

The standard for high-strength cap screws, these are made from alloy steel and have a minimum tensile strength of 150,000 psi. Length is measured from under the head.

Inch screws are marked on the head with six radial lines to indicate Grade 8. Screws have a minimum Rockwell hardness of C33 and a Class 2A thread fit. They also meet ASME B18.2.1 and SAE J429.

Zinc Yellow-Chromate Plated—Screws are rust resistant.

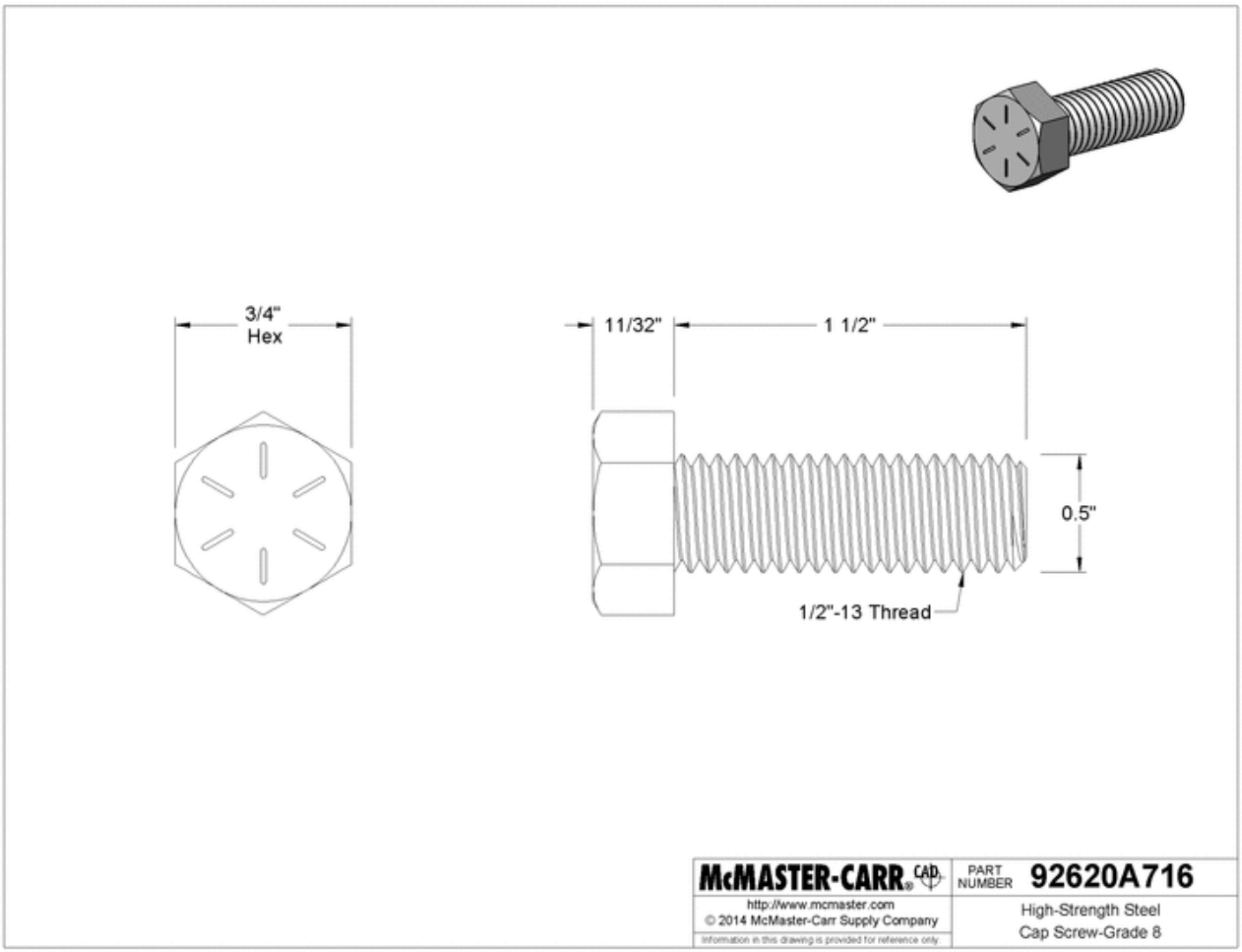

The information in this 3-D model is provided for reference only.

Thread Pitch Chart

Thread series cover designations of diameter/pitch combinations that are measured by the number of threads per inch (TPI) applied to a single diameter.

Coarse Thread Series (UNC/UNRC) is the most common designation for general application bolts and nuts. Coarse thread is beneficial, because they are less likely to cross thread, more tolerant in adverse conditions and facilitate quick assembly.

Fine Thread Series (UNF/UNRF) is commonly used in precision applications. Because of the larger tensile stress areas, they have high tension strength. However, a longer engagement is required for fine thread applications than for coarse series threads to prevent stripping.

8 – Thread Series (8UN) is the specified thread forming method for several ASTM standards including A193 B7, A193 B8/B8M, and A320. This series is used for diameters one inch and above.

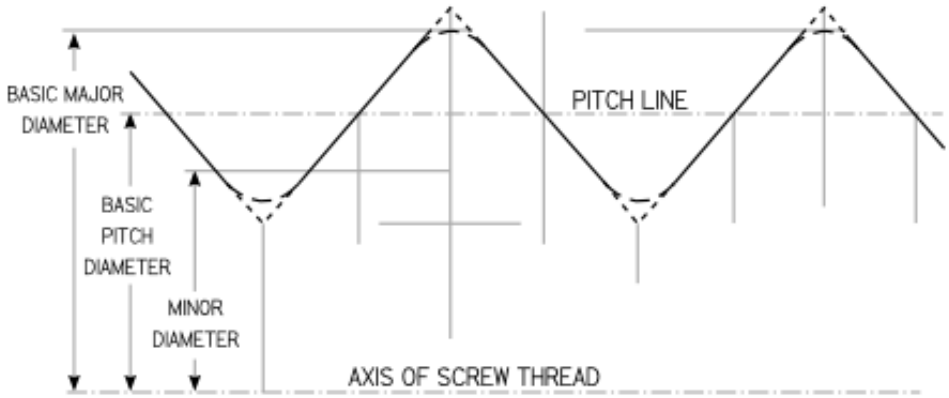

Coarse Thread Series - UNC				Fine Thread Series - UNF				8-Thread Series - 8UN			
Nominal Size and Threads Per In.	Basic Pitch Dia.	Section at Minor Dia.	Tensile Stress Area	Nominal Size and Threads Per In.	Basic Pitch Dia.	Section at Minor Dia.	Tensile Stress Area	Nominal Size and Threads Per In.	Basic Pitch Dia.	Section at Minor Dia.	Tensile Stress Area
	In.	Sq in.	Sq in.		In.	Sq in.	Sq in.		In.	Sq in.	Sq in.
3/8 - 16	0.3344	0.0678	0.0775	3/8 - 24	0.3479	0.0809	0.0878	– --	–	–	--
7/16 - 14	0.3911	0.0933	0.1063	7/16 - 20	0.4050	0.1090	0.1187	– --	–	–	--
1/2 - 13	0.4500	0.1257	0.1419	1/2 - 20	0.4675	0.1486	0.1599	– --	–	–	--
9/16 - 12	0.5084	0.162	0.182	9/16 - 18	0.5264	0.189	0.203	– --	–	–	--
5/8 - 11	0.5660	0.202	0.226	5/8 - 18	0.5889	0.240	0.256	– --	–	–	--

Engineering Calculation Sheet

Project: I-91 NB/SB Bridges, Hartford By: AJT Date: 3/4/2015

Project #: 5514001

Title: Slide System Design

Up/Down Station Jacking Frame **Reference**

If up/down station adjustment of bridge is necessary, a L6X6X1 angle will be tied to DYWIDAG coupler embedded in the concrete abutment (used for demolition tiedowns)

Assuming a maximum coefficient of friction of 10% and three jacks used, total load to be slid is 160 kips / 3 EA, 53.3 kips

Assume coefficient of friction between steel and concrete is 0.5 (Conservative, steel to steel is approx. 0.5)

Required load in DYWIDAG Rod is 53.3 kips / 0.5, 107 kips.
0.6fpu for 1 3/8" DYWIDAG is 142.2 kips, 107<142.2 OK

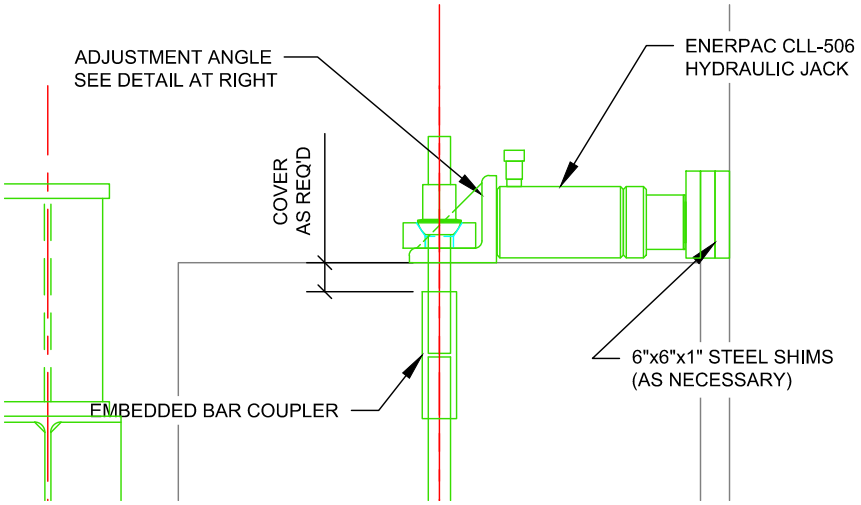

PRESTRESSING STEEL PROPERTIES

Nominal Bar Diameter (in.)(mm)	Ultimate Stress *f*pu (ksi)(Mpa)	Cross Section Area Aps (in.²)(mm²)	Ultimate Strength *f*pu Aps (kips)(KN)	Prestressing Force—kips KN			Weight (lbs./ft.) (kg/m)	Minimum* Elastic Bending Radius (ft.)(m)
				0.8*f*pu Aps	0.7*f*pu Aps	0.6*f*pu Aps		
1 in. 26 mm	150 1030	0.85 548	127.5 567	102.0 454	89.3 397	76.5 340	3.01 4.48	52 15.9
1 in. 26 mm	160** 1100	0.85 548	136.0 605	108.8 485	95.2 423	81.6 363	3.01 4.48	49 14.9
1¼ in. 32 mm	150 1030	1.25 806	187.5 834	150.0 662	131.3 584	112.5 500	4.39 6.54	64 19.5
1¼ in. 32 mm	160** 1100	1.25 806	200.0 890	160.0 707	140.0 623	120.0 534	4.39 6.54	60 18.3
1⅜ in. 36 mm	150 1030	1.58 1018	237.0 1055	189.6 839	165.9 738	142.2 633	5.56 8.28	72 22.0
1⅜ in. 36 mm	160** 1100	1.58 1018	252.8 1125	202.3 899	177.0 787	151.7 675	5.56 8.28	67 20.4
1¾ in. 46 mm	150 1030	2.62 1690	400 1779	320 1423	280 1245	240 1068	9.23 13.74	92 28.0

**Prebent bars are required for radii less than the minimum elastic radius.*

***Grade 160 bar is available only on special order.*

STEEL STRESS LEVELS

Dywidag bars may be stressed to the allowable limits of ACI 318. The maximum jacking stress (temporary) shall not exceed 0.80 f_{pu}, and the transfer stress (lockoff) shall not exceed 0.70 f_{pu}.

ACI 318 does not stipulate the magnitude of prestress losses or the maximum final effective (working) prestress level.

Prestress losses due to shrinkage, elastic shortening and creep of concrete, as well as steel relaxation and friction, must be considered.

The final effective (working) prestress level depends on the specific application. In the absence of a detailed analysis of the structural system, 0.60 f_{pu} may be used as an approximation of the effective (working) prestress level.

Actual long term loss calculations require structural design information not normally present on contract documents.

Some important notes concerning the safe handling of high strength steel for prestressed concrete:

1. Do not damage surface of bar.
2. Do not weld or burn so that sparks or hot slag will touch any portion of bar which will be under stress.
3. Do not use any part of bar as a ground connection for welding.
4. Do not use bar that has been kinked or contains a sharp bend.

Disregard of these instructions may cause failure of material during stressing.

COLD THREADED BAR

The Engineering ToolBox
Home www.EngineeringToolBox.com
Resources, Tools and Basic Information for Engineering and Design of Technical Applications! - *adapts seamlessly to phones, pads and desktops!*
Google™ Custom Search Search - *"Search is the most efficient way to navigate the Engineering ToolBox!"*

Friction and Coefficients of Friction

Friction theory and coefficients of friction for some common materials and materials combinations

The friction force is the force exerted by a surface when an object moves across it - or makes an effort to move across it.

The frictional force can be expressed as

$F_f = \mu N$ (1)

where

F_f = *frictional force (N, lb)*

μ = *static* (μ_s) *or kinetic* (μ_k) *frictional coefficient*

N = *normal force (N, lb)*

There are at least two types of friction forces

- kinetic (sliding) friction force- when an object moves
- static friction force - when an object makes an effort to move

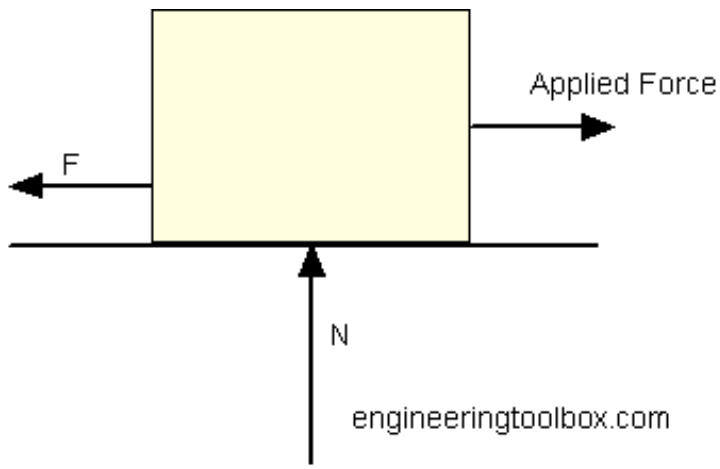

For an object pulled or pushed horizontally, the normal force - *N* - is simply the weight:

$N = m g$ (2)

where

m = *mass of the object (kg, slugs)*

g = *acceleration of gravity (9.81 m/s^2, 32 ft/s^2)*

Friction Coefficients for some Common Materials and Materials Combinations

Materials and Material Combinations		Static Frictional Coefficient - μ_s -	
		Clean and Dry Surfaces	Lubricated and Greasy Surfaces
Aluminum	Aluminum	1.05 - 1.35	0.3
Aluminum-bronze	Steel	0.45	
Aluminum	Mild Steel	0.61	
Brake material[2)]	Cast iron	0.4	
Brake material[2)]	Cast iron (wet)	0.2	
Brass	Steel	0.35	0.19
Brass	Cast Iron	0.3[1)]	
Brick	Wood	0.6	
Bronze	Steel		0.16

Bronze	Cast Iron	0.22[1)]	
Bronze - sintered	Steel		0.13
Cadmium	Cadmium	0.5	0.05
Cadmium	Chromium	0.41	0.34
Cadmium	Mild Steel	0.46[1)]	
Cast Iron	Cast Iron	1.1, 0.15[1)]	0.07[1)]
Cast Iron	Oak	0.49[1)]	0.075[1]
Cast iron	Mild Steel	0.4, 0.23[1)]	0.21, 0.133[1)]
Car tire	Asphalt	0.72	
Car tire	Grass	0.35	
Carbon (hard)	Carbon	0.16	0.12 - 0.14
Carbon	Steel	0.14	0.11 - 0.14
Chromium	Chromium	0.41	0.34
Copper-Lead alloy	Steel	0.22	
Copper	Copper	1	0.08
Copper	Cast Iron	1.05, 0.29[1)]	
Copper	Mild Steel	0.53, 0.36[1)]	0.18[1)]
Diamond	Diamond	0.1	0.05 - 0.1
Diamond	Metal	0.1 - 0.15	0.1
Glass	Glass	0.9 - 1.0, 0.4[1)]	0.1 - 0.6, 0.09-0.12[1)]
Glass	Metal	0.5 - 0.7	0.2 - 0.3
Glass	Nickel	0.78	0.56
Graphite	Steel	0.1	0.1
Graphite	Graphite (in vacuum)	0.5 - 0.8	
Graphite	Graphite	0.1	0.1
Hemp rope	Timber	0.5	
Horseshoe	Rubber	0.68	
Horseshoe	Concrete	0.58	
Ice	Ice	0.02 - 0.09	
Ice	Wood	0.05	
Ice	Steel	0.03	
Iron	Iron	1.0	0.15 - 0.20
Lead	Cast Iron	0.43[1)]	
Leather	Oak	0.61, 052[1]	
Leather	Metal	0.4	0.2
Leather	Wood	0.3 - 0.4	
Leather	Clean Metal	0.6	
Leather fiber	Cast iron	0.31	
Leather fiber	Aluminum	0.30	
Magnesium	Magnesium	0.6	0.08
Masonry	Brick	0.6 - 0.7	
Nickel	Nickel	0.7 - 1.1, 0.53[1)]	0.28, 0.12[1)]
Nickel	Mild Steel	0.64[1)]	0.178[1)]
Nylon	Nylon	0.15 - 0.25	
Oak	Oak (parallel grain)	0.62, 0.48[1)]	
Oak	Oak (cross grain)	0.54, 0.32[1]	0.072[1]
Paper	Cast Iron	0.20	
Phosphor-bronze	Steel	0.35	
Platinum	Platinum	1.2	0.25
Plexiglas	Plexiglas	0.8	0.8
Plexiglas	Steel	0.4-0.5	0.4 - 0.5
Polystyrene	Polystyrene	0.5	0.5
Polystyrene	Steel	0.3-0.35	0.3 - 0.35
Polythene	Steel	0.2	0.2

Polystyrene	Polystyrene	0.5	0.5
Rubber	Rubber	1.16	
Rubber	Cardboard	0.5 - 0.8	
Rubber	Dry Asphalt	0.9 (0.5 - 0.8)[1)]	
Rubber	Wet Asphalt	0.25 - 0.75[1)]	
Rubber	Dry Concrete	0.6 - 0.85[1)]	
Rubber	Wet Concrete	0.45 - 0.75[1)]	
Silver	Silver	1.4	0.55
Sapphire	Sapphire	0.2	0.2
Silver	Silver	1.4	0.55
Skin	Metals	0.8 - 1.0	
Steel	Steel	0.5 - 0.8	0.16
Straw Fiber	Cast Iron	0.26	
Straw Fiber	Aluminum	0.27	
Tarred fiber	Cast Iron	0.15	
Tarred fiber	Aluminum	0.18	
Teflon	Teflon	0.04	0.04, 0.04[1)]
Teflon	Steel	0.05 - 0.2	
Tungsten Carbide	Steel	0.4-0.6	0.1 - 0.2
Tungsten Carbide	Tungsten Carbide	0.2 - 0.25	0.12
Tungsten Carbide	Copper	0.35	
Tungsten Carbide	Iron	0.8	
Tin	Cast Iron	0.32[1)]	
Tire, dry	Road, dry	1	
Tire, wet	Road, wet	0.2	
Wood	Clean Wood	0.25 - 0.5	
Wood	Wet Wood	0.2	
Wood	Clean Metal	0.2 - 0.6	
Wood	Wet Metals	0.2	
Wood	Stone	0.2 - 0.4	
Wood	Concrete	0.62	
Wood	Brick	0.6	
Wood - waxed	Wet snow	0.14, 0.1[1)]	
Wood - waxed	Dry snow	0.04[1)]	
Zinc	Cast Iron	0.85, 0.21[1)]	
Zinc	Zinc	0.6	0.04

[1)] Kinetic or sliding frictional coefficient - only when there is a relative motion between the surfaces. Without motion the values are somewhat higher.

[2)] Note! It is commonly thought that the static coefficients of friction are higher than the dynamic or kinetic values. This is a very simplistic statement and quite misleading for brake materials. With many brake materials the dynamic coefficient of friction quoted is an "average" value when the material is subject to a range of sliding speeds, surface pressures and most importantly operating temperatures. If the static situation is considered at the same pressure, but at ambient temperature, then the static coefficient of friction is often significantly LOWER than the average quoted dynamic value. It can be as low as 40 - 50% of the quoted dynamic value.

Kinetic (Sliding) versus Static Frictional Coefficients

Kinetic or sliding frictional coefficients are used with relative motion between objects. Static frictional coefficients are used for objects without relative motion. Note that static coefficients are somewhat higher than the kinetic or sliding coefficients.

Example - Friction Force

A *100 lb* wooden crate is pushed across a concrete floor. The friction coefficient between the object and the surface is *0.62*. The friction force can be calculated as

$F_f = 0.62\ (100\ lb)$

$= \underline{62}\ (lb)$

- *1 lb = 0.4536 kg*

Example - Braking Distance Car

A car with mass *2000 kg* drives with speed *100 km/h* on a wet road with friction coefficient *0.2*.

Note! - The friction work required to stop the car is equal to the kinetic energy of the car.

The kinetic energy of the car can be calculated as

Calculations for Slide System TMD AJT 3/23/15, Page 65 of 68

Table 3. *(Continued)* **Standard Series and Selected Combinations — Unified Screw Threads**

Nominal Size, Threads per Inch, and Series Designation[a]	External[b]								Internal[b]					
	Class	Allow-ance	Major Diameter			Pitch Diameter		UNR Minor Dia.,[c] Max (Ref.)	Class	Minor Diameter		Pitch Diameter		Major Diameter
			Max[d]	Min	Min[e]	Max[d]	Min			Min	Max	Min	Max	Min
7/8–24 UNS	2A	0.0012	0.8738	0.8666	—	0.8467	0.8426	0.8242	2B	0.830	0.840	0.8479	0.8532	0.8750
7/8–27 UNS	2A	0.0012	0.8738	0.8671	—	0.8497	0.8458	0.8297	2B	0.835	0.844	0.8509	0.8560	0.8750
7/8–28 UN	2A	0.0012	0.8738	0.8673	—	0.8506	0.8468	0.8312	2B	0.836	0.845	0.8518	0.8568	0.8750
	3A	0.0000	0.8750	0.8685	—	0.8518	0.8489	0.8324	3B	0.8360	0.8426	0.8518	0.8555	0.8750
7/8–32 UN	2A	0.0011	0.8739	0.8679	—	0.8536	0.8500	0.8367	2B	0.841	0.849	0.8547	0.8594	0.8750
	3A	0.0000	0.8750	0.8690	—	0.8547	0.8520	0.8378	3B	0.8410	0.8469	0.8547	0.8583	0.8750
15/16–12 UN	2A	0.0017	0.9358	0.9244	—	0.8817	0.8760	0.8366	2B	0.847	0.865	0.8834	0.8908	0.9375
	3A	0.0000	0.9375	0.9261	—	0.8834	0.8793	0.8383	3B	0.8470	0.8575	0.8834	0.8889	0.9375
15/16–16 UN	2A	0.0015	0.9360	0.9266	—	0.8954	0.8904	0.8615	2B	0.870	0.884	0.8969	0.9034	0.9375
	3A	0.0000	0.9375	0.9281	—	0.8969	0.8932	0.8630	3B	0.8700	0.8783	0.8969	0.9018	0.9375
15/16–20 UNEF	2A	0.0014	0.9361	0.9280	—	0.9036	0.8991	0.8766	2B	0.883	0.895	0.9050	0.9109	0.9375
	3A	0.0000	0.9375	0.9294	—	0.9050	0.9016	0.8780	3B	0.8830	0.8912	0.9050	0.9094	0.9375
15/16–28 UN	2A	0.0012	0.9363	0.9298	—	0.9131	0.9091	0.8937	2B	0.899	0.907	0.9143	0.9195	0.9375
	3A	0.0000	0.9375	0.9310	—	0.9143	0.9113	0.8949	3B	0.8990	0.9051	0.9143	0.9182	0.9375
15/16–32 UN	2A	0.0011	0.9364	0.9304	—	0.9161	0.9123	0.8992	2B	0.904	0.911	0.9172	0.9221	0.9375
	3A	0.0000	0.9375	0.9315	—	0.9172	0.9144	0.9003	3B	0.9040	0.9094	0.9172	0.9209	0.9375
1–8 UNC	1A	0.0020	0.9980	0.9755	—	0.9168	0.9067	0.8492	1B	0.865	0.890	0.9188	0.9320	1.0000
	2A	0.0020	0.9980	0.9830	0.9755	0.9168	0.9100	0.8492	2B	0.865	0.890	0.9188	0.9276	1.0000
	3A	0.0000	1.0000	0.9850	—	0.9188	0.9137	0.8512	3B	0.8650	0.8797	0.9188	0.9254	1.0000
1–10 UNS	2A	0.0018	0.9982	0.9853	—	0.9332	0.9270	0.8792	2B	0.892	0.913	0.9350	0.9430	1.0000
1–12 UNF	1A	0.0018	0.9982	0.9810	—	0.9441	0.9353	0.8990	1B	0.910	0.928	0.9459	0.9573	1.0000
	2A	0.0018	0.9982	0.9868	—	0.9441	0.9382	0.8990	2B	0.910	0.928	0.9459	0.9535	1.0000
	3A	0.0000	1.0000	0.9886	—	0.9459	0.9415	0.9008	3B	0.9100	0.9198	0.9459	0.9516	1.0000
1–14 UNS[f]	1A	0.0017	0.9983	0.9828	—	0.9519	0.9435	0.9132	1B	0.923	0.938	0.9536	0.9645	1.0000
	2A	0.0017	0.9983	0.9880	—	0.9519	0.9463	0.9132	2B	0.923	0.938	0.9536	0.9609	1.0000
	3A	0.0000	1.0000	0.9897	—	0.9536	0.9494	0.9149	3B	0.9230	0.9315	0.9536	0.9590	1.0000
1–16 UN	2A	0.0015	0.9985	0.9891	—	0.9579	0.9529	0.9240	2B	0.932	0.946	0.9594	0.9659	1.0000
	3A	0.0000	1.0000	0.9906	—	0.9594	0.9557	0.9255	3B	0.9320	0.9408	0.9594	0.9643	1.0000
1–18 UNS	2A	0.0014	0.9986	0.9899	—	0.9625	0.9578	0.9325	2B	0.940	0.953	0.9639	0.9701	1.0000

Copyright 2008, Industrial Press Inc., New York, NY - www.industrialpress.com

Table 3. *(Continued)* **Standard Series and Selected Combinations — Unified Screw Threads**

Nominal Size, Threads per Inch, and Series Designation[a]	External[b]								Internal[b]					
	Class	Allow-ance	Major Diameter			Pitch Diameter		UNR Minor Dia.,[c] Max (Ref.)	Class	Minor Diameter		Pitch Diameter		Major Diameter
			Max[d]	Min	Min[e]	Max[d]	Min			Min	Max	Min	Max	Min
4½–12 UN	2A	0.0020	4.4980	4.4866	—	4.4439	4.4374	4.3988	2B	4.410	4.428	4.4459	4.4544	4.5000
	3A	0.0000	4.5000	4.4886	—	4.4459	4.4410	4.4008	3B	4.4100	4.4198	4.4459	4.4523	4.5000
4½–16 UN	2A	0.0018	4.4982	4.4888	—	4.4576	4.4517	4.4237	2B	4.432	4.446	4.4594	4.4670	4.5000
	3A	0.0000	4.5000	4.4906	—	4.4594	4.4550	4.4255	3B	4.4320	4.4408	4.4594	4.4651	4.5000
4¾–10 UNS	2A	0.0022	4.7478	4.7349	—	4.6828	4.6756	4.6288	2B	4.642	4.663	4.6850	4.6944	4.7500
4¾–14 UNS	2A	0.0019	4.7481	4.7378	—	4.7017	4.6953	4.6631	2B	4.673	4.688	4.7036	4.7119	4.7500
4¾–12 UN	2A	0.0020	4.7480	4.7366	—	4.6939	4.6872	4.6488	2B	4.660	4.678	4.6959	4.7046	4.7500
	3A	0.0000	4.7500	4.7386	—	4.6959	4.6909	4.6508	3B	4.6600	4.6698	4.6959	4.7025	4.7500
4¾–16 UN	2A	0.0018	4.7482	4.7388	—	4.7076	4.7015	4.6737	2B	4.682	4.696	4.7094	4.7173	4.7500
	3A	0.0000	4.7500	4.7406	—	4.7094	4.7049	4.6755	3B	4.6820	4.6908	4.7094	4.7153	4.7500
5.00–10 UNS	2A	0.0022	4.9978	4.9849	—	4.9328	4.9256	4.8788	2B	4.892	4.913	4.9350	4.9444	5.0000
5.00–14 UNS	2A	0.0019	4.9981	4.9878	—	4.9517	4.9453	4.9131	2B	4.923	4.938	4.9536	4.9619	5.0000
5.00–12 UN	2A	0.0020	4.9980	4.9866	—	4.9439	4.9372	4.8988	2B	4.910	4.928	4.9459	4.9546	5.0000
	3A	0.0000	5.0000	4.9886	—	4.9459	4.9409	4.9008	3B	4.9100	4.9198	4.9459	4.9525	5.0000
5.00–16 UN	2A	0.0018	4.9982	4.9888	—	4.9576	4.9515	4.9237	2B	4.932	4.946	4.9594	4.9673	5.0000
	3A	0.0000	5.0000	4.9906	—	4.9594	4.9549	4.9255	3B	4.9320	4.9408	4.9594	4.9653	5.0000
5¼–10 UNS	2A	0.0022	5.2478	5.2349	—	5.1829	5.1756	5.1288	2B	5.142	5.163	5.1850	5.1944	5.2500
5¼–14 UNS	2A	0.0019	5.2481	5.2378	—	5.2017	5.1953	5.1631	2B	5.173	5.188	5.2036	5.2119	5.2500
5¼–12 UN	2A	0.0020	5.2480	5.2366	—	5.1939	5.1872	5.1488	2B	5.160	5.178	5.1959	5.2046	5.2500
	3A	0.0000	5.2500	5.2386	—	5.1959	5.1909	5.1508	3B	5.1600	5.1698	5.1959	5.2025	5.2500
5¼–16 UN	2A	0.0018	5.2482	5.2388	—	5.2076	5.2015	5.1737	2B	5.182	5.196	5.2094	5.2173	5.2500
	3A	0.0000	5.2500	5.2406	—	5.2094	5.2049	5.1755	3B	5.1820	5.1908	5.2094	5.2153	5.2500
5½–10 UNS	2A	0.0022	5.4978	5.4849	—	5.4328	5.4256	5.3788	2B	5.392	5.413	5.4350	5.4444	5.5000
5½–14 UNS	2A	0.0019	5.4981	5.4878	—	5.4517	5.4453	5.4131	2B	5.423	5.438	5.4536	5.4619	5.5000
5½–12 UN	2A	0.0020	5.4980	5.4866	—	5.4439	5.4372	5.3988	2B	5.410	5.428	5.4459	5.4546	5.5000
	3A	0.0000	5.5000	5.4886	—	5.4459	5.4409	5.4008	3B	5.4100	5.4198	5.4459	5.4525	5.5000
5½–16 UN	2A	0.0018	5.4982	5.4888	—	5.4576	5.4515	5.4237	2B	5.432	5.446	5.4594	5.4673	5.5000
	3A	0.0000	5.5000	5.4906	—	5.4594	5.4549	5.4255	3B	5.4320	5.4408	5.4594	5.4653	5.5000

Copyright 2008, Industrial Press Inc., New York, NY - www.industrialpress.com

Table 2. *(Continued)* **Recommended Hole Size Limits Before Tapping Unified Threads**

Thread Size	Classes 1B and 2B								Class 3B							
	Length of Engagement (D = Nominal Size of Thread)															
	To and Including $\frac{1}{3}D$		Above $\frac{1}{3}D$ to $\frac{2}{3}D$		Above $\frac{2}{3}D$ to $1\frac{1}{2}D$		Above $1\frac{1}{2}D$ to $3D$		To and Including $\frac{1}{3}D$		Above $\frac{1}{3}D$ to $\frac{2}{3}D$		Above $\frac{2}{3}D$ to $1\frac{1}{2}D$		Above $1\frac{1}{2}D$ to $3D$	
	Recommended Hole Size Limits															
	Min[a]	Max	Min	Max	Min	Max[b]	Min	Max	Min[a]	Max	Min	Max	Min	Max[b]	Min	Max
$\frac{3}{8}$–24	0.330	0.335	0.333	0.338	0.335	0.340	0.338	0.343	0.3300	0.3336	0.3314	0.3354	0.3332	0.3372	0.3351	0.3391
$\frac{3}{8}$–32	0.341	0.345	0.343	0.347	0.345	0.349	0.347	0.351	0.3410	0.3441	0.3415	0.3455	0.3429	0.3469	0.3444	0.3484
$\frac{3}{8}$–36	0.345	0.349	0.346	0.350	0.347	0.352	0.349	0.353	0.3450	0.3488	0.3449	0.3488	0.3461	0.3501	0.3474	0.3514
$\frac{7}{16}$–14	0.360	0.368	0.364	0.372	0.368	0.376	0.372	0.380	0.3600	0.3660	0.3630	0.3688	0.3659	0.3717	0.3688	0.3746
$\frac{7}{16}$–20	0.383	0.389	0.386	0.391	0.389	0.395	0.391	0.397	0.3830	0.3875	0.3855	0.3896	0.3875	0.3916	0.3896	0.3937
$\frac{7}{16}$–28	0.399	0.403	0.401	0.406	0.403	0.407	0.406	0.410	0.3990	0.4020	0.3995	0.4035	0.4011	0.4051	0.4017	0.4067
$\frac{1}{2}$–13	0.417	0.426	0.421	0.430	0.426	0.434	0.430	0.438	0.4170	0.4225	0.4196	0.4254	0.4226	0.4284	0.4255	0.4313
$\frac{1}{2}$–12	0.410	0.414	0.414	0.424	0.414	0.428	0.424	0.433	0.4100	0.4161	0.4129	0.4192	0.4160	0.4223	0.4192	0.4255
$\frac{1}{2}$–20	0.446	0.452	0.449	0.454	0.452	0.457	0.454	0.460	0.4460	0.4498	0.4477	0.4517	0.4497	0.4537	0.4516	0.4556
$\frac{1}{2}$–28	0.461	0.467	0.463	0.468	0.466	0.470	0.468	0.472	0.4610	0.4645	0.4620	0.4660	0.4636	0.4676	0.4652	0.4692
$\frac{9}{16}$–12	0.472	0.476	0.476	0.486	0.476	0.490	0.486	0.495	0.4720	0.4783	0.4753	0.4813	0.4783	0.4843	0.4813	0.4873
$\frac{9}{16}$–18	0.502	0.509	0.505	0.512	0.509	0.515	0.512	0.518	0.5020	0.5065	0.5045	0.5086	0.5065	0.5106	0.5086	0.5127
$\frac{9}{16}$–24	0.517	0.522	0.520	0.525	0.522	0.527	0.525	0.530	0.5170	0.5209	0.5186	0.5226	0.5204	0.5244	0.5221	0.5261
$\frac{9}{16}$–28	0.524	0.528	0.526	0.531	0.528	0.532	0.531	0.535	0.5240	0.5270	0.5245	0.5285	0.5261	0.5301	0.5277	0.5317
$\frac{5}{8}$–11	0.527	0.536	0.532	0.541	0.536	0.546	0.541	0.551	0.5270	0.5328	0.5298	0.5360	0.5329	0.5391	0.5360	0.5422
$\frac{5}{8}$–12	0.535	0.544	0.540	0.549	0.544	0.553	0.549	0.558	0.5350	0.5406	0.5377	0.5435	0.5405	0.5463	0.5434	0.5492
$\frac{5}{8}$–18	0.565	0.572	0.568	0.575	0.572	0.578	0.575	0.581	0.5650	0.5690	0.5670	0.5711	0.5690	0.5730	0.5711	0.5752
$\frac{5}{8}$–24	0.580	0.585	0.583	0.588	0.585	0.590	0.588	0.593	0.5800	0.5834	0.5811	0.5851	0.5829	0.5869	0.5846	0.5886
$\frac{5}{8}$–28	0.586	0.591	0.588	0.593	0.591	0.595	0.593	0.597	0.5860	0.5895	0.5870	0.5910	0.5886	0.5926	0.5902	0.5942
$\frac{11}{16}$–12	0.597	0.606	0.602	0.611	0.606	0.615	0.611	0.620	0.5970	0.6029	0.6001	0.6057	0.6029	0.6085	0.6057	0.6113
$\frac{11}{16}$–24	0.642	0.647	0.645	0.650	0.647	0.652	0.650	0.655	0.6420	0.6459	0.6436	0.6476	0.6454	0.6494	0.6471	0.6511
$\frac{3}{4}$–10	0.642	0.653	0.647	0.658	0.653	0.663	0.658	0.668	0.6420	0.6481	0.6449	0.6513	0.6481	0.6545	0.6513	0.6577
$\frac{3}{4}$–12	0.660	0.669	0.665	0.674	0.669	0.678	0.674	0.683	0.6600	0.6652	0.6626	0.6680	0.6653	0.6707	0.6680	0.6734
$\frac{3}{4}$–16	0.682	0.689	0.686	0.693	0.689	0.696	0.693	0.700	0.6820	0.6866	0.6844	0.6887	0.6865	0.6908	0.6886	0.6929
$\frac{3}{4}$–20	0.696	0.702	0.699	0.704	0.702	0.707	0.704	0.710	0.6960	0.6998	0.6977	0.7017	0.6997	0.7037	0.7016	0.7056
$\frac{3}{4}$–28	0.711	0.716	0.713	0.718	0.716	0.720	0.718	0.722	0.7110	0.7145	0.7120	0.7160	0.7136	0.7176	0.7152	0.7192
$\frac{13}{16}$–12	0.722	0.731	0.727	0.736	0.731	0.740	0.736	0.745	0.7220	0.7276	0.7250	0.7303	0.7276	0.7329	0.7303	0.7356

Copyright 2008, Industrial Press Inc., New York, NY - www.industrialpress.com

Calculations for Slide System TMD AJT 3/23/15, Page 68 of 68

Table 2. *(Continued)* **Recommended Hole Size Limits Before Tapping Unified Threads**

Thread Size	Classes 1B and 2B								Class 3B							
	Length of Engagement (D = Nominal Size of Thread)															
	To and Including $\frac{1}{3}D$		Above $\frac{1}{3}D$ to $\frac{2}{3}D$		Above $\frac{2}{3}D$ to $1\frac{1}{2}D$		Above $1\frac{1}{2}D$ to $3D$		To and Including $\frac{1}{3}D$		Above $\frac{1}{3}D$ to $\frac{2}{3}D$		Above $\frac{2}{3}D$ to $1\frac{1}{2}D$		Above $1\frac{1}{2}D$ to $3D$	
	Recommended Hole Size Limits															
	Min[a]	Max	Min	Max	Min	Max[b]	Min	Max	Min[a]	Max	Min	Max	Min	Max[b]	Min	Max
$4\frac{1}{2}$–8	4.365	4.378	4.371	4.384	4.378	4.390	4.384	4.396	4.3650	4.3722	4.3684	4.3759	4.3722	4.3797	4.3760	4.3835
$4\frac{1}{2}$–12	4.410	4.419	4.419	4.424	4.419	4.428	4.424	4.433	4.4100	4.4148	4.4123	4.4173	4.4148	4.4198	4.4173	4.4223
$4\frac{1}{2}$–16	4.432	4.439	4.437	4.444	4.439	4.446	4.444	4.455	4.4320	4.4366	4.4344	4.4387	4.4365	4.4408	4.4386	4.4429
$4\frac{3}{4}$–8	4.615	4.628	4.621	4.646	4.628	4.640	4.646	4.646	4.6150	4.6222	4.6184	4.6259	4.6222	4.6297	4.6260	4.6335
$4\frac{3}{4}$–12	4.660	4.669	4.665	4.674	4.669	4.678	4.674	4.683	4.6600	4.6648	4.6623	4.6673	4.6648	4.6698	4.6673	4.6723
$4\frac{3}{4}$–16	4.682	4.689	4.686	4.693	4.689	4.696	4.693	4.700	4.6820	4.6866	4.6844	4.6887	4.6865	4.6908	4.6886	4.6929
5–8	4.865	4.878	4.871	4.884	4.878	4.890	4.884	4.896	4.8650	4.8722	4.8684	4.8759	4.8722	4.8797	4.8760	4.8835
5–12	4.910	4.919	4.915	4.924	4.919	4.928	4.924	4.933	4.9100	4.9148	4.9123	4.9173	4.9148	4.9198	4.9173	4.9223
5–16	4.932	4.939	4.936	4.943	4.939	4.946	4.943	4.950	4.9320	4.9366	4.9344	4.9387	4.9365	4.9408	4.9386	4.9429
$5\frac{1}{4}$–8	5.115	5.128	5.121	5.134	5.128	5.140	5.134	5.146	5.1150	5.1222	5.1184	5.1259	5.1222	5.1297	5.1260	5.1335
$5\frac{1}{4}$–12	5.160	5.169	5.165	5.174	5.169	5.178	5.174	5.183	5.1600	5.1648	5.1623	5.1673	5.1648	5.1698	5.1673	5.1723
$5\frac{1}{4}$–16	5.182	5.189	5.186	5.193	5.189	5.196	5.193	5.200	5.1820	5.1866	5.1844	5.1887	5.1865	5.1908	5.1886	5.1929
$5\frac{1}{2}$–8	5.365	5.378	5.371	5.384	5.378	5.390	5.384	5.396	5.3650	5.3722	5.3684	5.3759	5.3722	5.3797	5.3760	5.3835
$5\frac{1}{2}$–12	5.410	5.419	5.415	5.424	5.419	5.428	5.424	5.433	5.4100	5.4148	5.4123	5.4173	5.4148	5.4198	5.4173	5.4223
$5\frac{1}{2}$–16	5.432	5.439	5.436	5.442	5.439	5.446	5.442	5.450	5.4320	5.4366	5.4344	5.4387	5.4365	5.4408	5.4386	5.4429
$5\frac{3}{4}$–8	5.615	5.628	5.621	5.634	5.628	5.640	5.634	5.646	5.6150	5.6222	5.6184	5.6259	5.6222	5.6297	5.6260	5.6335
$5\frac{3}{4}$–12	5.660	5.669	5.665	5.674	5.669	5.678	5.674	5.683	5.6600	5.6648	5.6623	5.6673	5.6648	5.6698	5.6673	5.6723
$5\frac{3}{4}$–16	5.682	5.689	5.686	5.693	5.689	5.696	5.693	5.700	5.6820	5.6866	5.6844	5.6887	5.6865	5.6908	5.6886	5.6929
6–8	5.865	5.878	5.871	5.896	5.878	5.890	5.896	5.896	5.8650	5.8722	5.8684	5.8759	5.8722	5.8797	5.8760	5.8835
6–12	5.910	5.919	5.915	5.924	5.919	5.928	5.924	5.933	5.9100	5.9148	5.9123	5.9173	5.9148	5.9198	5.9173	5.9223
6–16	5.932	5.939	5.935	5.943	5.939	5.946	5.943	5.950	5.9320	5.9366	5.9344	5.9387	5.9365	5.9408	5.9386	5.9429

[a] This is the minimum minor diameter specified in the thread tables, page 1723.

[b] This is the maximum minor diameter specified in the thread tables, page 1723.

All dimensions are in inches.

For basis of recommended hole size limits see accompanying text.

As an aid in selecting suitable drills, see the listing of American Standard drill sizes in the twist drill section. For amount of expected drill oversize, see page 873.

Copyright 2008, Industrial Press Inc., New York, NY - www.industrialpress.com

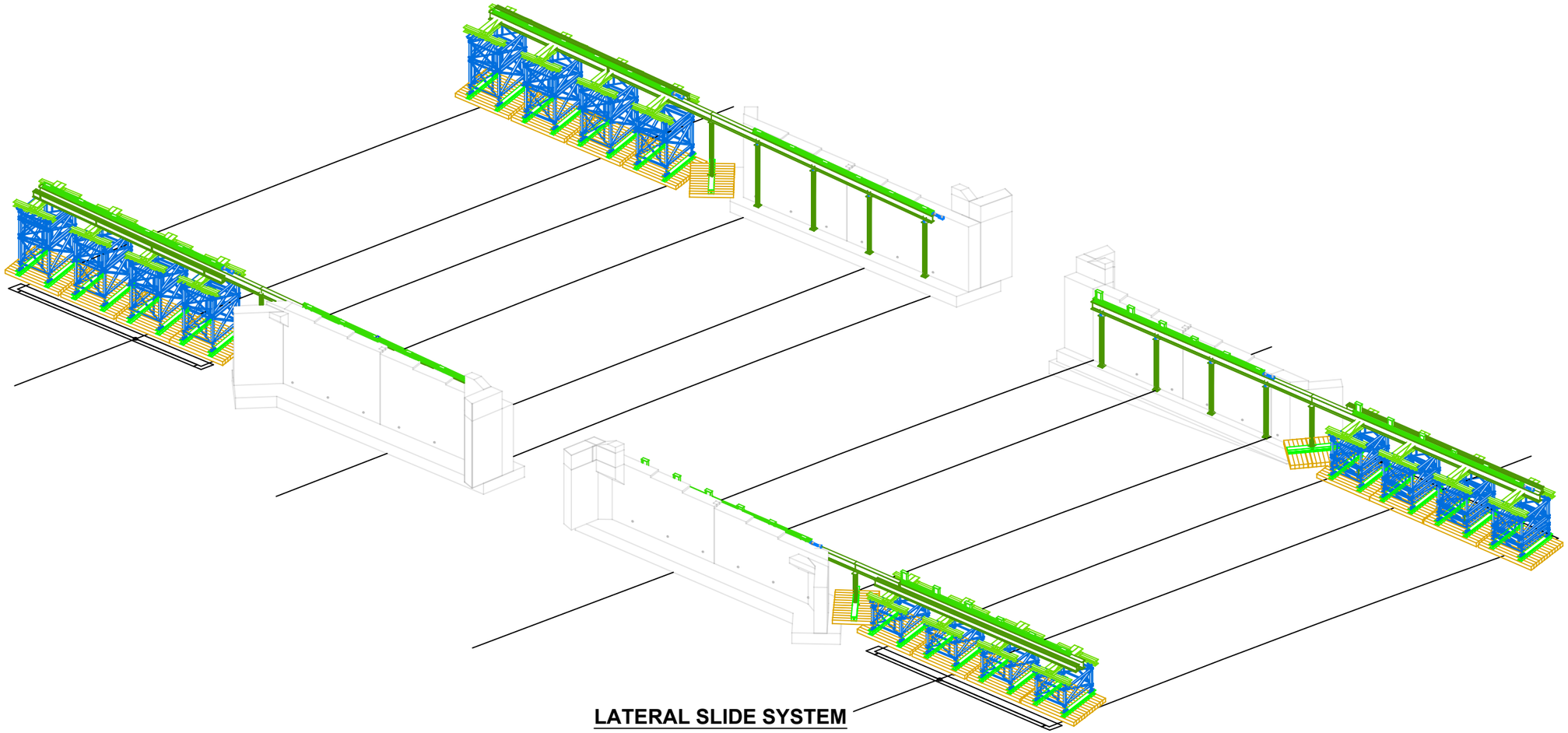

LATERAL SLIDE SYSTEM

GENERAL NOTES

DRAWINGS SHALL NOT BE SCALED

ANY CHANGES SHALL BE APPROVED BY THE ENGINEER

MATERIALS SHALL BE NEW OR IN GOOD CONDITION AND APPROVED BY THE DESIGN ENGINEER.

ALL WELDS ARE TO FOLLOW CURRENT AWS STANDARDS

SLIDING TO OCCUR IN WINDS LESS THAN 30 MPH

DESIGN AIDS

-ASD NINTH ED. (STEEL)
-AASHTO GUIDE DESIGN SPECIFICATIONS FOR BRIDGE TEMPORARY WORKS

MATERIAL PROPERTIES

STEEL
- W SHAPE BEAMS
  - ASTM A992 Fy = 50 ksi MIN
- HP SECTIONS
  - ASTM A572, Gr. 50 Fy = 50 ksi MIN
- PLATE, ANGLE, MISC.
  - ASTM A36 Fy = 36 ksi MIN
- STAINLESS STEEL
  - 304, B2 SURFACE FINISH
- PIPE
  - ASTM A53, Gr. B Fy = 35 ksi MIN
- PTFE
  - REF STD. SPEC. 731.08

BOLTS
- ¾"Ø AND LARGER A325 U.N.O
- ½"Ø GRADE 8 OR BETTER

CRANE MATS
- MIXED OAK NO. 2 OR BETTER
- ALLOWABLE GROUND PRESSURE ASSUMED AS 4500 psf

LIST OF DRAWINGS

TITLE	01
LAYOUTS	02
ABUTMENT ELEVATIONS	06
TYPICAL SECTIONS AND DETAILS	10
SHORING TOWER DETAILS	12
SHORING DETAILS	15
POUR BEAM DETAILS	17
SLIDE SUPPORT BEAM DETAILS	24
SLIDE BEAM DETAILS	29
SLIDE SYSTEM DETAILS	##

Revision No. & Date	Vermont Agency of Transportation			Engineer's Seal	Drawing Status		Name	Date	PCL Civil Constructors, Inc. 3810 Northdale Blvd. Suite 200, Tampa Florida 33624 (813)-264-9500 ; Fax: (813)-264-6689	
						Drawn By	AJT	2/27/15		
	Road No.	County / City	Financial Project ID No.		FOR CONSTRUCTION	Design By	TMD / AJT	2/27/15	Submittal LATERAL SLIDE SYSTEM	PCL Project / Job No. I-91 Hartford / 5514001
	I-91	Windsor / Hartford	IM 091-2(79)			Check By	TMD	03/23/15	Drawing Title TITLE PAGE AND GENERAL NOTES	Sheet No. 01

H:\District Office\Engineering\01 TIG Tampa Active Projects\5514001 - I-91 Hartford\50 Superstructure\58 Floats and Rolls\01 CAD Files\Slide_System_P.dwg 3/23/2015 8:09 AM

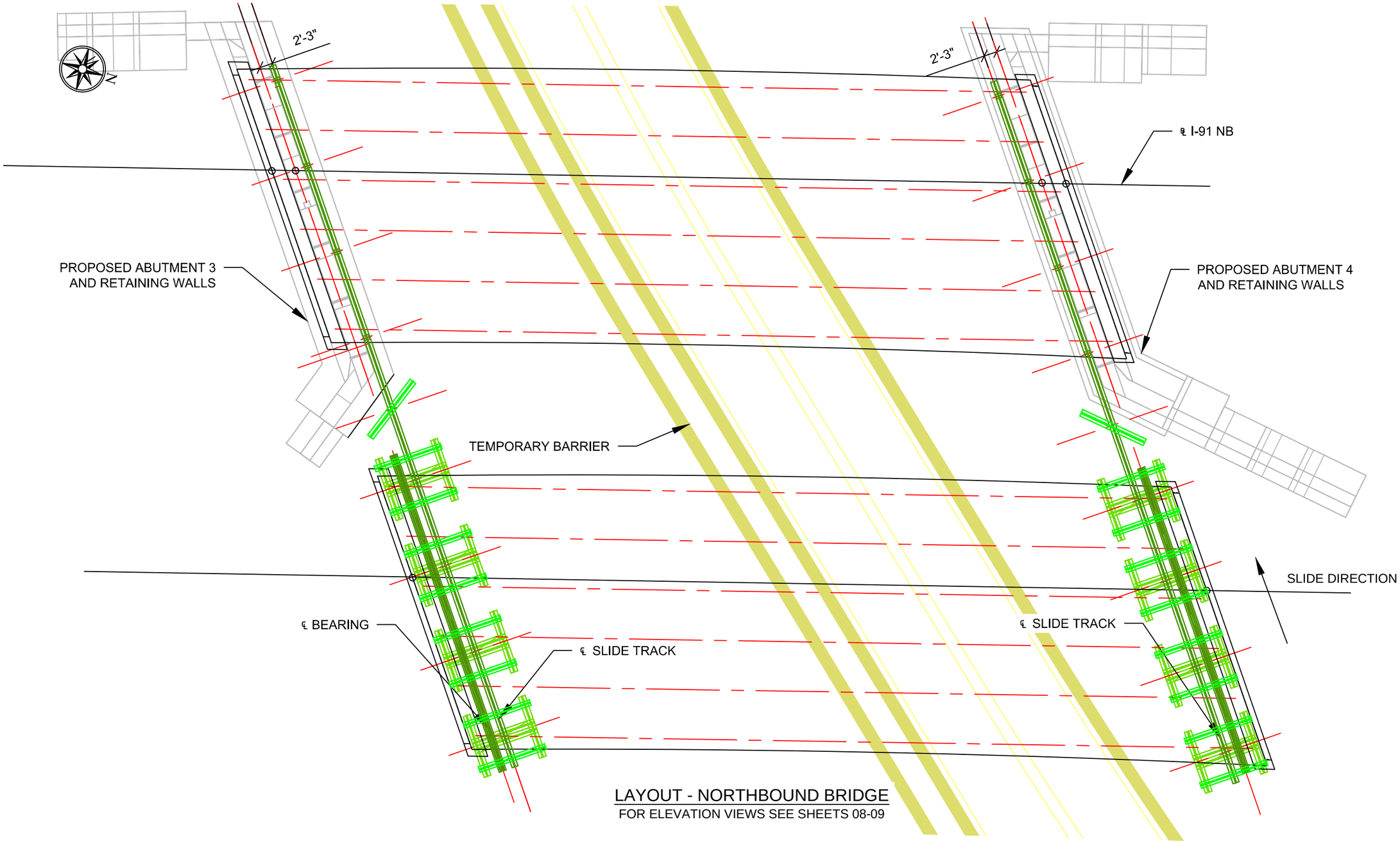

LAYOUT - NORTHBOUND BRIDGE

FOR ELEVATION VIEWS SEE SHEETS 08-09

Revision No. & Date	Vermont Agency of Transportation			Drawing Status		Name	Date	PCL Civil Constructors, Inc. 3810 Northdale Blvd. Suite 200, Tampa Florida 33624 (813)-264-9500 ; Fax: (813)-264-6689	
				Mar 23 2015 9:45 AM	Drawn By	AJT	2/27/15		
	Road No.	County / City	Financial Project ID No.	FOR CONSTRUCTION	Design By	TMD / AJT	2/27/15	Submittal LATERAL SLIDE SYSTEM	PCL Project / Job No. I-91 Hartford / 5514001
	I-91	Windsor / Hartford	IM 091-2(79)		Check By	TMD	03/23/15	Drawing Title NB LAYOUT	Sheet No. 02

STATE OF VERMONT TIMOTHY DAVIS NO. 97183 CIVIL LICENSED PROFESSIONAL ENGINEER

Timothy S Davis

N:\District Office\Engineering\01 TIG Tampa Active Projects\5514001 - I-91 Hartford\05 Superstructure\08 Floats and Rolls\01 CAD Files\Slide_System_P.dwg 3/23/2015 9:09 AM

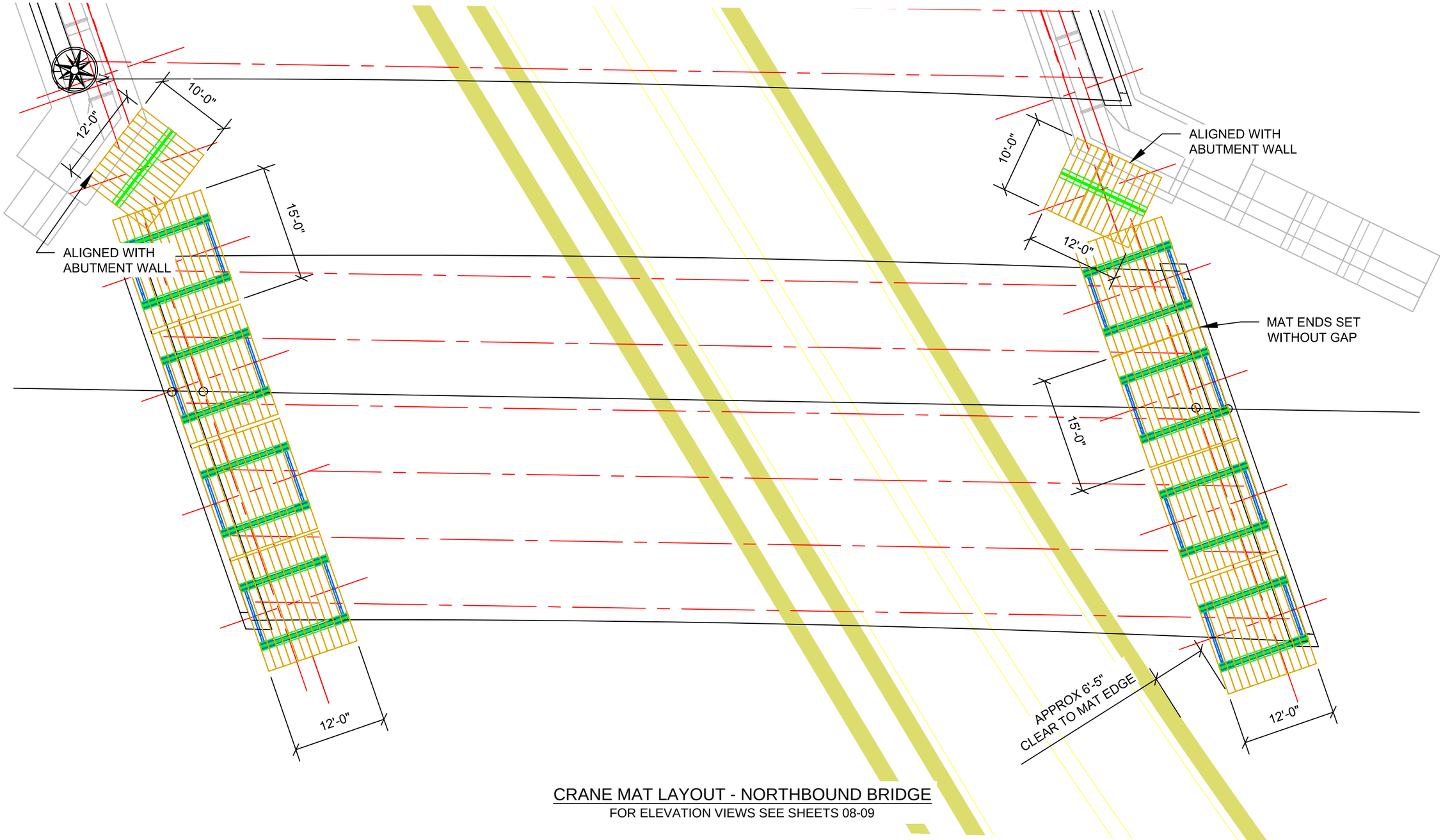

CRANE MAT LAYOUT - NORTHBOUND BRIDGE

FOR ELEVATION VIEWS SEE SHEETS 08-09

Revision No. & Date	Vermont Agency of Transportation			Drawing Status		Name	Date	PCL Civil Constructors, Inc. 3810 Northdale Blvd. Suite 200, Tampa Florida 33624 (813)-264-9500 ; Fax: (813)-264-6689	
				Mar 23 2015 9:45 AM	Drawn By	AJT	2/27/15		
	Road No.	County / City	Financial Project ID No.	FOR CONSTRUCTION	Design By	TMD / AJT	2/27/15	Submittal LATERAL SLIDE SYSTEM	PCL Project / Job No. I-91 Hartford / 5514001
	I-91	Windsor / Hartford	IM 091-2(79)		Check By	TMD	03/23/15	Drawing Title NB MAT LAYOUT	Sheet No. 03

STATE OF VERMONT
TIMOTHY S. DAVIS
NO. 97183
CIVIL
LICENSED
PROFESSIONAL ENGINEER
Expires 3 Sep

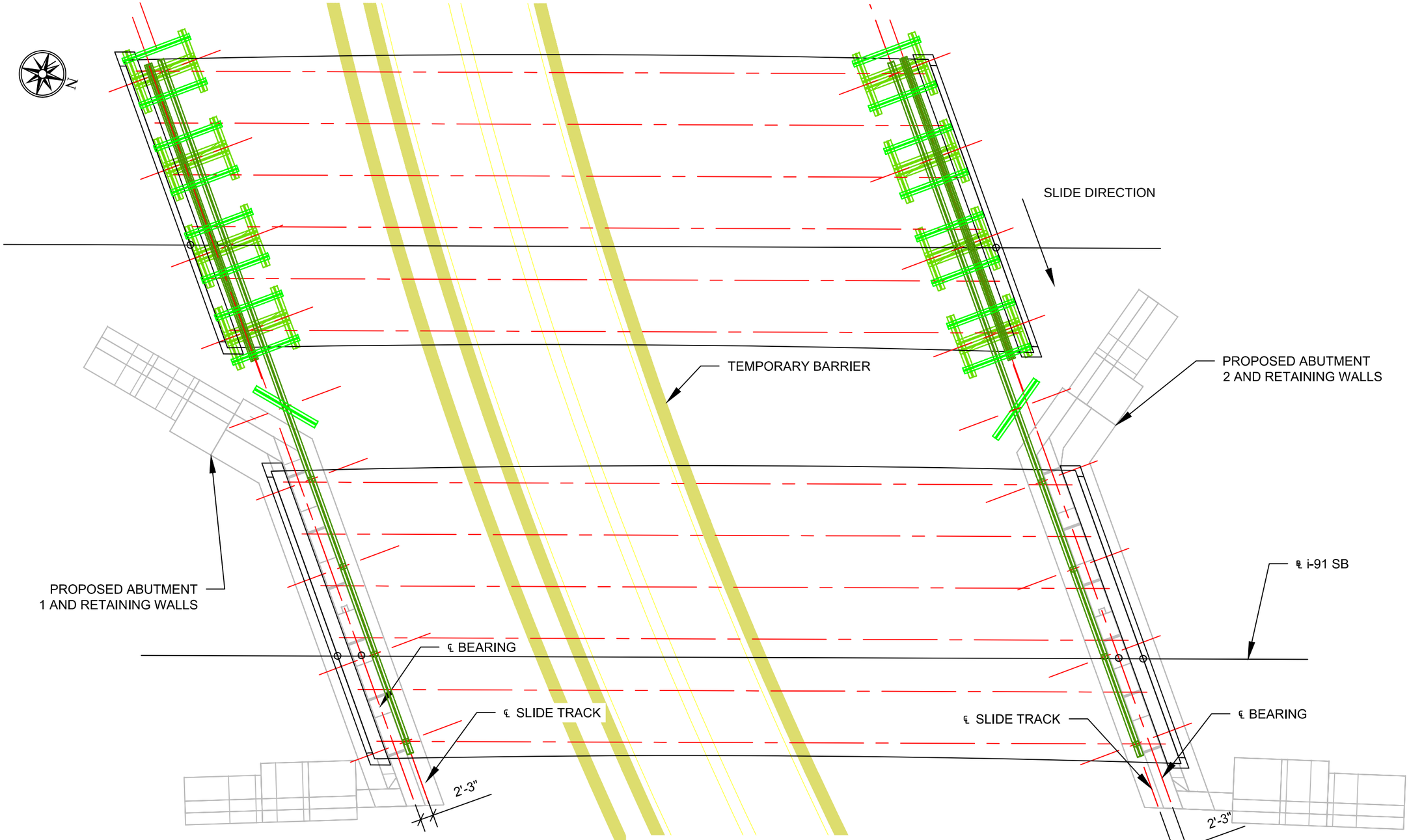

LAYOUT - SOUTHBOUND BRIDGE

FOR ELEVATION VIEWS SEE SHEETS 06-07

Revision No. & Date	Vermont Agency of Transportation			Drawing Status		Name	Date	PCL Civil Constructors, Inc. 3810 Northdale Blvd. Suite 200, Tampa Florida 33624 (813)-264-9500 ; Fax: (813)-264-6689	
				Mar 23 2015 9:46 AM	Drawn By	AJT	2/27/15		
	Road No.	County / City	Financial Project ID No.	FOR CONSTRUCTION	Design By	TMD / AJT	2/27/15	Submittal LATERAL SLIDE SYSTEM	PCL Project / Job No. I-91 Hartford / 5514001
	I-91	Windsor / Hartford	IM 091-2(79)		Check By	TMD	03/23/15	Drawing Title SB LAYOUT	Sheet No. 04

STATE OF VERMONT TIMOTHY DAVIS NO. 97183 CIVIL LICENSED PROFESSIONAL ENGINEER

Timothy S. Davis

N:\District Office\Engineering\01 TR\ Tampa Active Projects\5514001 - I-91 Hartford\05 Superstructure\08 Floats and Rolls\01 CAD Files\Slide_System_P.dwg 3/23/2015 9:09 AM

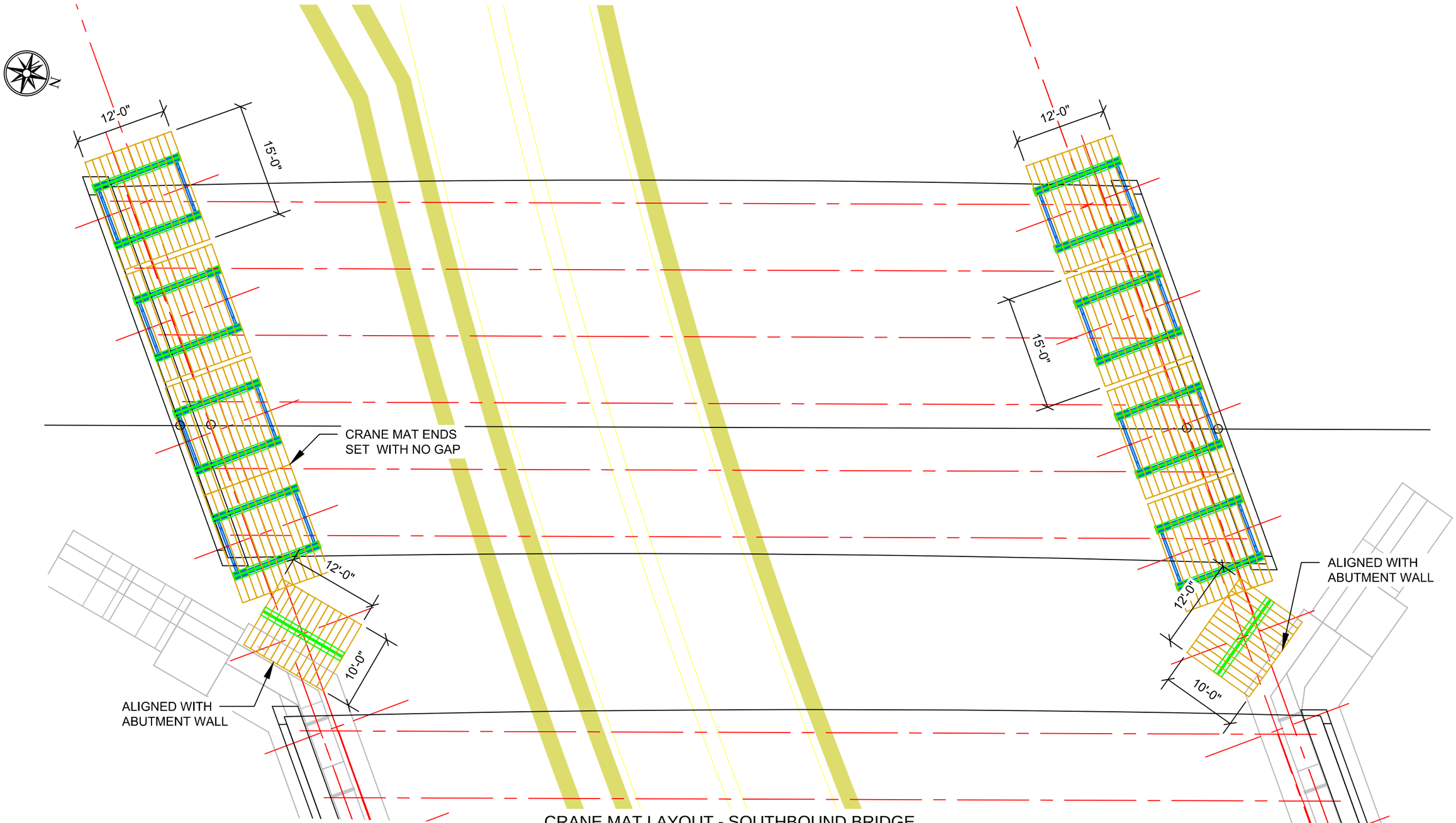

CRANE MAT LAYOUT - SOUTHBOUND BRIDGE

FOR ELEVATION VIEWS SEE SHEETS 06-07

Revision No. & Date	Vermont Agency of Transportation			Drawing Status		Name	Date	PCL Civil Constructors, Inc. 3810 Northdale Blvd. Suite 200, Tampa Florida 33624 (813)-264-9500 ; Fax: (813)-264-6689	
				Mar 23 2015 9:46 AM	Drawn By	AJT	2/27/15		
	Road No.	County / City	Financial Project ID No.	FOR CONSTRUCTION	Design By	TMD / AJT	2/27/15	Submittal LATERAL SLIDE SYSTEM	PCL Project / Job No. I-91 Hartford / 5514001
	I-91	Windsor / Hartford	IM 091-2(79)		Check By	TMD	03/23/15	Drawing Title SB MAT LAYOUT	Sheet No. 05

STATE OF VERMONT
TIMOTHY J. DAVIS
NO. 97183
CIVIL
LICENSED
PROFESSIONAL ENGINEER

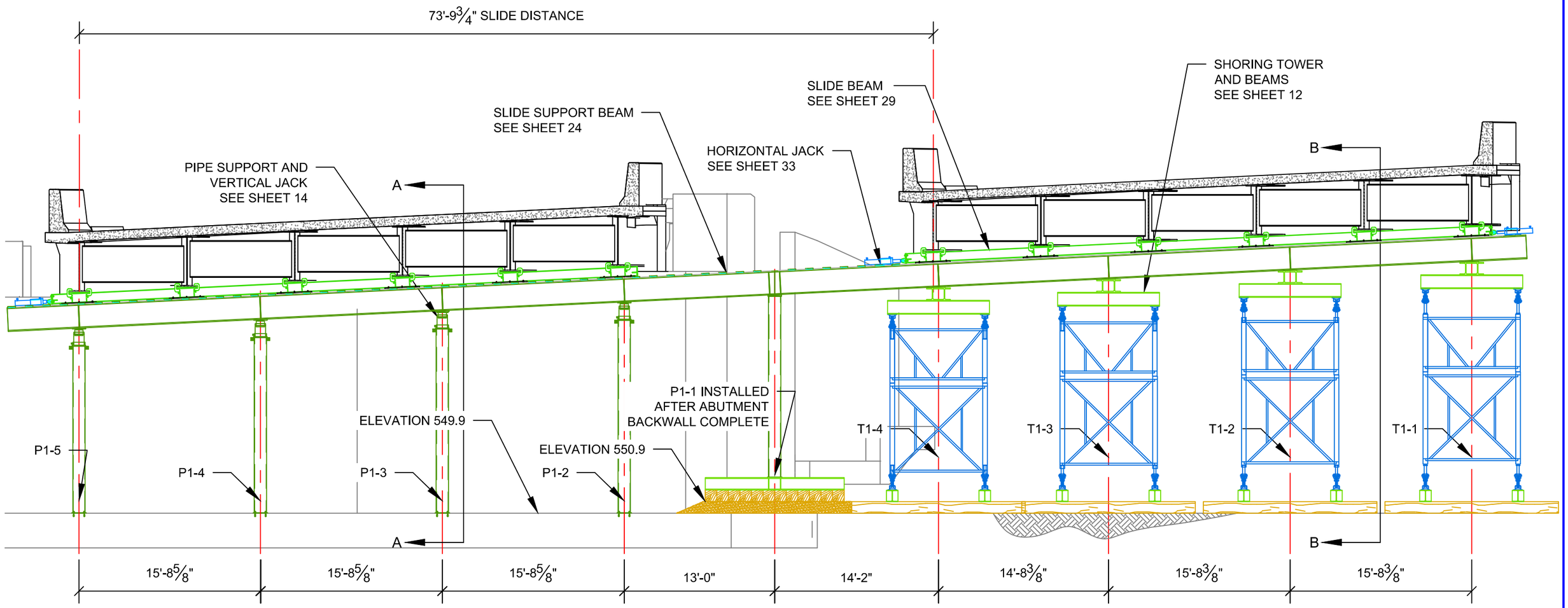

ABUTMENT 1 ELEVATION

FACING DOWNSTATION

BRIDGE SHOWN IN INITIAL AND FINAL POSITION

Revision No. & Date	Vermont Agency of Transportation			Engineer's Seal	Drawing Status		Name	Date	PCL Civil Constructors, Inc. 3810 Northdale Blvd. Suite 200, Tampa Florida 33624 (813)-264-9500 ; Fax: (813)-264-6689	
				STATE OF VERMONT TIMOTHY DAVIS NO. 97183 CIVIL LICENSED PROFESSIONAL ENGINEER	Mar 23 2015 9:46 AM	Drawn By	AJT	2/27/15		
	Road No.	County / City	Financial Project ID No.		FOR CONSTRUCTION	Design By	TMD / AJT	2/27/15	Submittal LATERAL SLIDE SYSTEM	PCL Project / Job No. I-91 Hartford / 5514001
	I-91	Windsor / Hartford	IM 091-2(79)			Check By	TMD	03/23/15	Drawing Title ABUTMENT 1 ELEVATION	Sheet No. 06

N:\District Office\Engineering\01 TIG Tampa Active Projects\5514001 - I-91 Hartford\05 Superstructure\08 Floats and Rolls\01 CAD Files\Slide_System_P.dwg 3/23/2015 9:09 AM

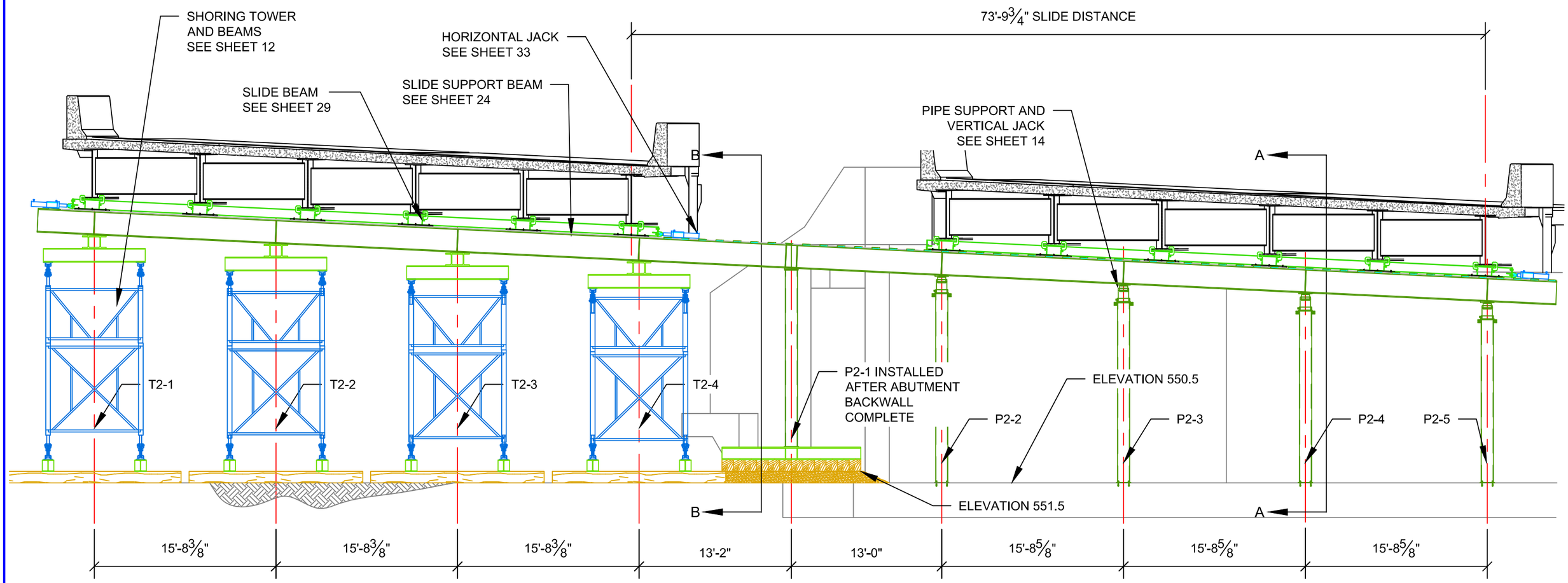

ABUTMENT 2 ELEVATION

FACING UPSTATION

BRIDGE SHOWN IN INITIAL AND FINAL POSITION

Revision No. & Date	Vermont Agency of Transportation			Drawing Status		Name	Date	PCL Civil Constructors, Inc. 3810 Northdale Blvd. Suite 200, Tampa Florida 33624 (813)-264-9500 ; Fax: (813)-264-6689	
				Mar 23 2015 9:46 AM	Drawn By	AJT	2/27/15		
	Road No.	County / City	Financial Project ID No.	FOR CONSTRUCTION	Design By	TMD / AJT	2/27/15	Submittal LATERAL SLIDE SYSTEM	PCL Project / Job No. I-91 Hartford / 5514001
	I-91	Windsor / Hartford	IM 091-2(79)		Check By	TMD	03/23/15	Drawing Title ABUTMENT 2 ELEVATION	Sheet No. 07

STATE OF VERMONT
TIMOTHY DAVIS
NO. 97183
CIVIL
LICENSED
PROFESSIONAL ENGINEER

Engineer's Seal

H:\District Office\Engineering\01 TIG Tampa Active Projects\5514001 - I-91 Hartford\00 Superstructure\08 Floats and Rails\01 CAD Files\Slide_System_P.dwg 3/23/2015 9:09 AM

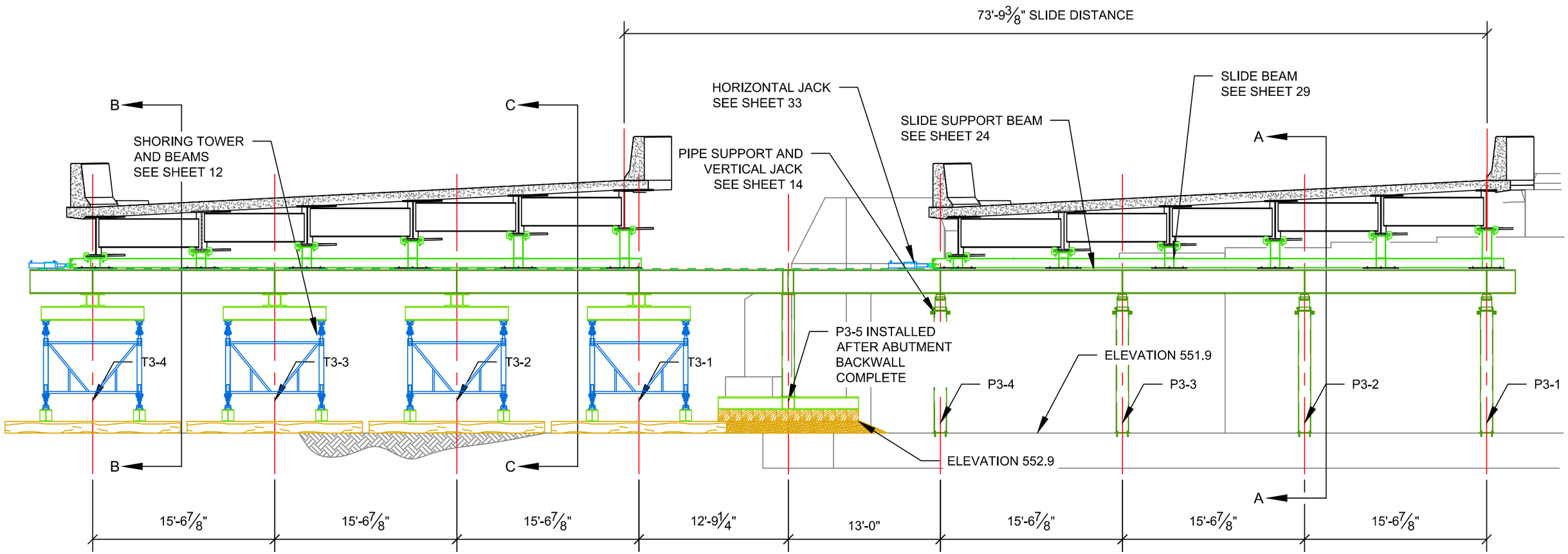

ABUTMENT 3 ELEVATION

FACING DOWNSTATION

BRIDGE SHOWN IN INITIAL AND FINAL POSITION

Revision No. & Date	Vermont Agency of Transportation			Drawing Status		Name	Date	PCL Civil Constructors, Inc. 3810 Northdale Blvd. Suite 200, Tampa Florida 33624 (813)-264-9500 ; Fax: (813)-264-6689	
				Mar 23 2015 9:46 AM	Drawn By	AJT	2/27/15		
	Road No.	County / City	Financial Project ID No.	FOR CONSTRUCTION	Design By	TMD / AJT	2/27/15	Submittal LATERAL SLIDE SYSTEM	PCL Project / Job No. I-91 Hartford / 5514001
	I-91	Windsor / Hartford	IM 091-2(79)		Check By	TMD	03/23/15	Drawing Title ABUTMENT 3 ELEVATION	Sheet No. 08

STATE OF VERMONT
TIMOTHY DAVIS
NO. 97183
CIVIL
LICENSED
PROFESSIONAL ENGINEER

Expires 03 Sep

H:\District Office\Engineering\01 TIG Tampa Active Projects\5514001 - I-91 Hartford\DO Superstructure\SB Floats and Rolls\01 CAD Files\Slide_System_P.dwg 3/23/2015 9:09 AM

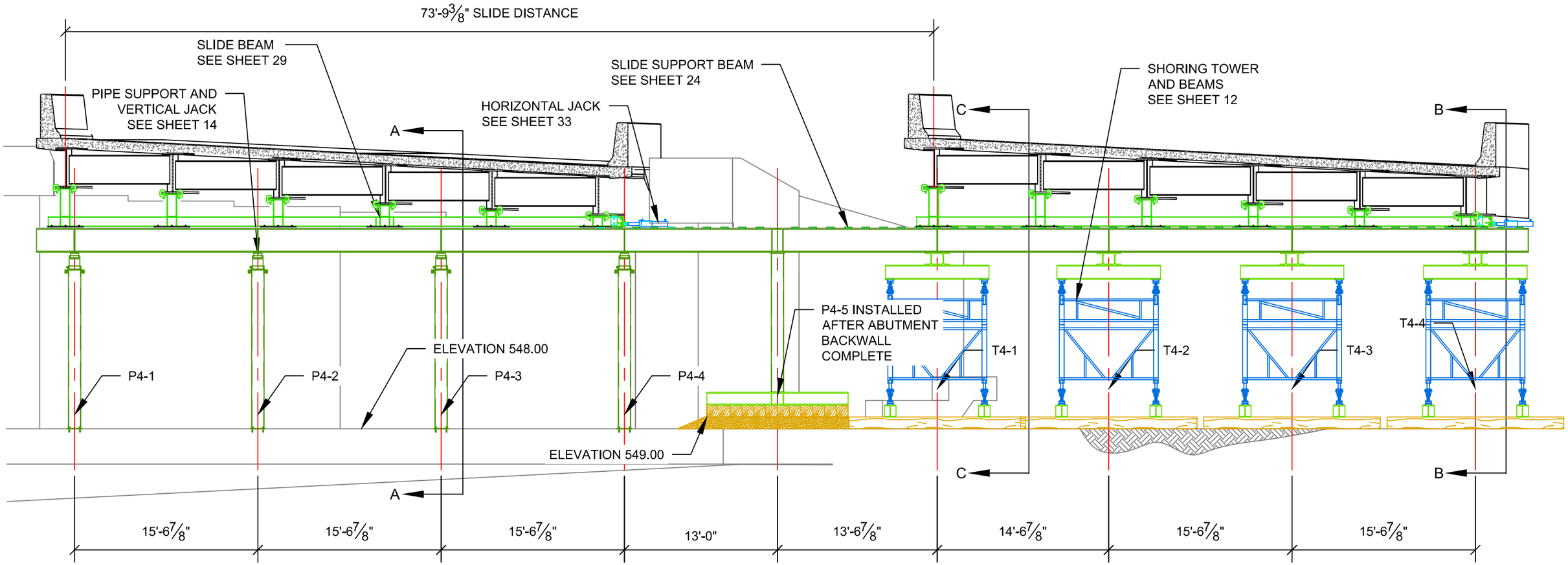

ABUTMENT 4 ELEVATION

FACING DOWNSTATION

BRIDGE SHOWN IN INITIAL AND FINAL POSITION

Revision No. & Date	Vermont Agency of Transportation			Drawing Status		Name	Date	PCL Civil Constructors, Inc. 3810 Northdale Blvd. Suite 200, Tampa Florida 33624 (813)-264-9500 ; Fax: (813)-264-6689	
				Mar 23 2015 9:46 AM	Drawn By	AJT	2/27/15		
	Road No.	County / City	Financial Project ID No.	FOR CONSTRUCTION	Design By	TMD / AJT	2/27/15	Submittal LATERAL SLIDE SYSTEM	PCL Project / Job No. I-91 Hartford / 5514001
	I-91	Windsor / Hartford	IM 091-2(79)		Check By	TMD	03/23/15	Drawing Title ABUTMENT 4 ELEVATION	Sheet No. 09

STATE OF VERMONT
TIMOTHY DAVIS
NO. 97183
CIVIL
LICENSED
PROFESSIONAL ENGINEER
Timothy S. Davis

H:\District Office\Engineering\01 TIG Tampa Active Projects\5514001 - I-91 Hartford\50 Superstructure\58 Floats and Rolls\01 CAD Files\Slide_System_P.dwg 3/23/2015 9:10 AM

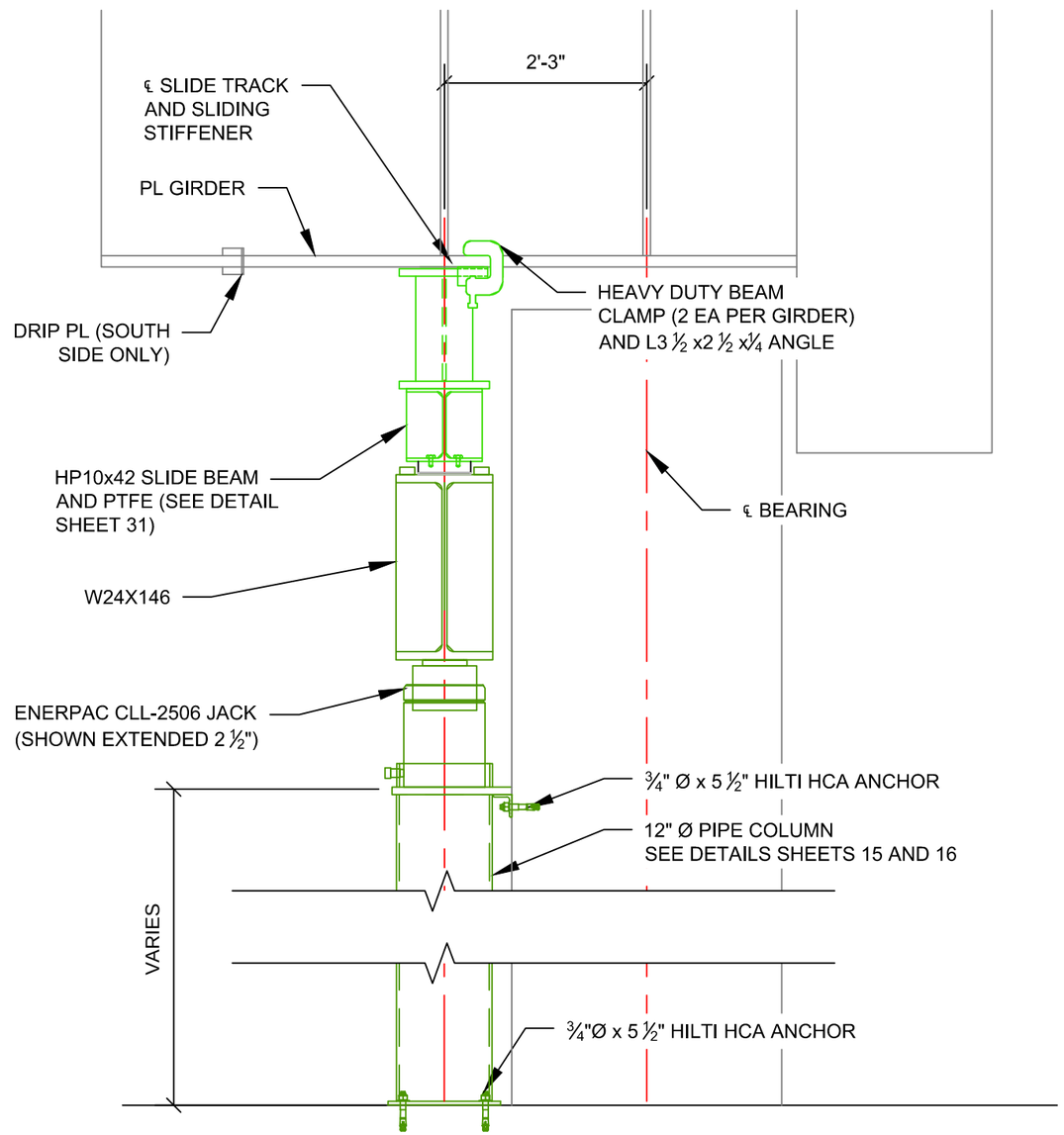

SECTION A-A

Revision No. & Date	Vermont Agency of Transportation			Drawing Status		Name	Date	PCL Civil Constructors, Inc. 3810 Northdale Blvd. Suite 200, Tampa Florida 33624 (813)-264-9500 ; Fax: (813)-264-6689	
				Mar 23 2015 9:46 AM	Drawn By	AJT	2/27/15		
	Road No.	County / City	Financial Project ID No.	FOR CONSTRUCTION	Design By	TMD / AJT	2/27/15	Submittal LATERAL SLIDE SYSTEM	PCL Project / Job No. I-91 Hartford / 5514001
	I-91	Windsor / Hartford	IM 091-2(79)		Check By	TMD	03/23/15	Drawing Title TYPICAL SECTIONS	Sheet No. 10

STATE OF VERMONT TIMOTHY DAVIS NO. 97183 CIVIL LICENSED PROFESSIONAL ENGINEER

N:\District Office\Engineering\01 TIG Tampa Active Projects\5514001 - I-91 Hartford\05 Superstructure\08 Floats and Rolls\01 CAD Files\Slide_System_P.dwg 3/23/2015 9:10 AM

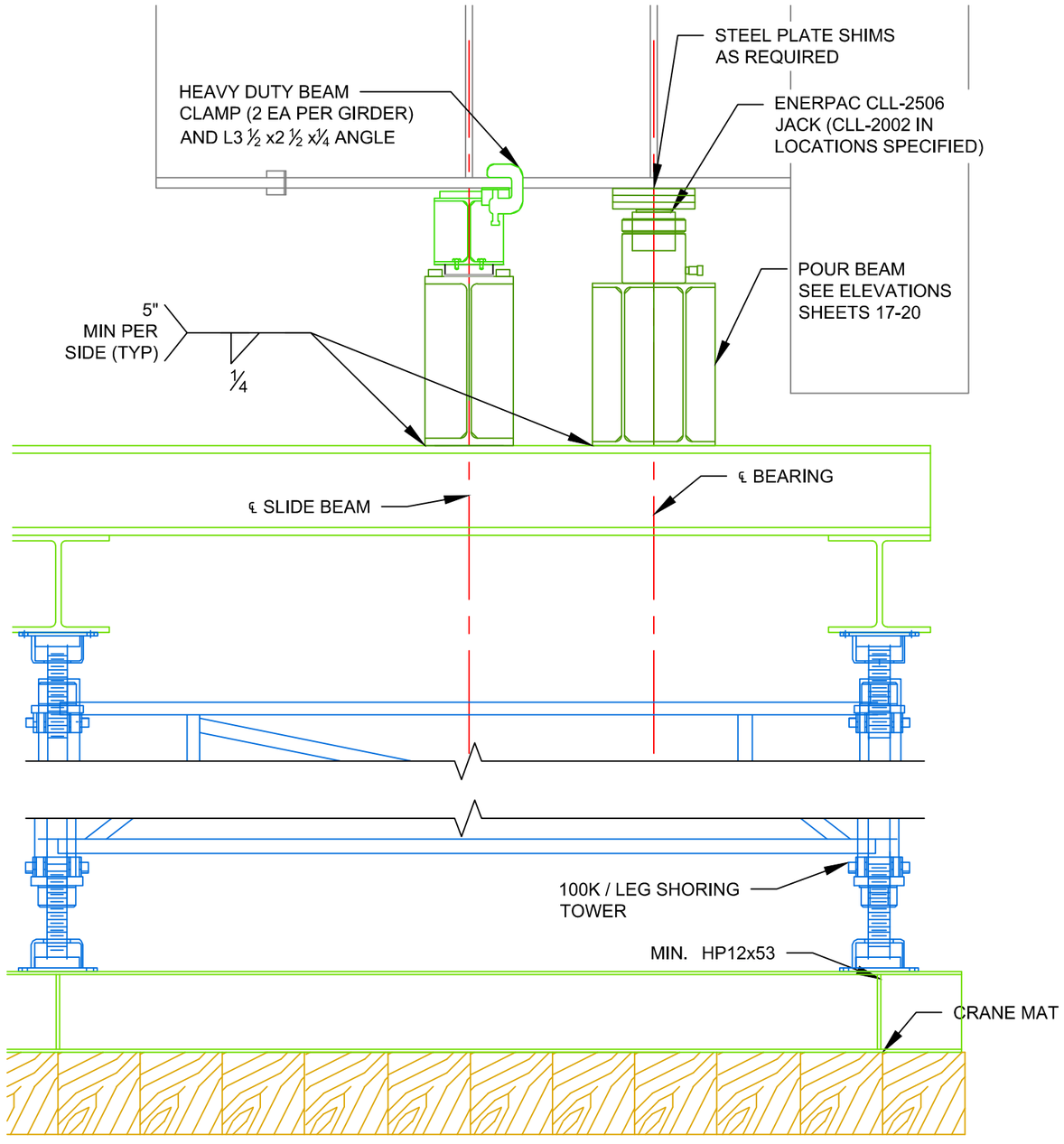

SECTION B-B

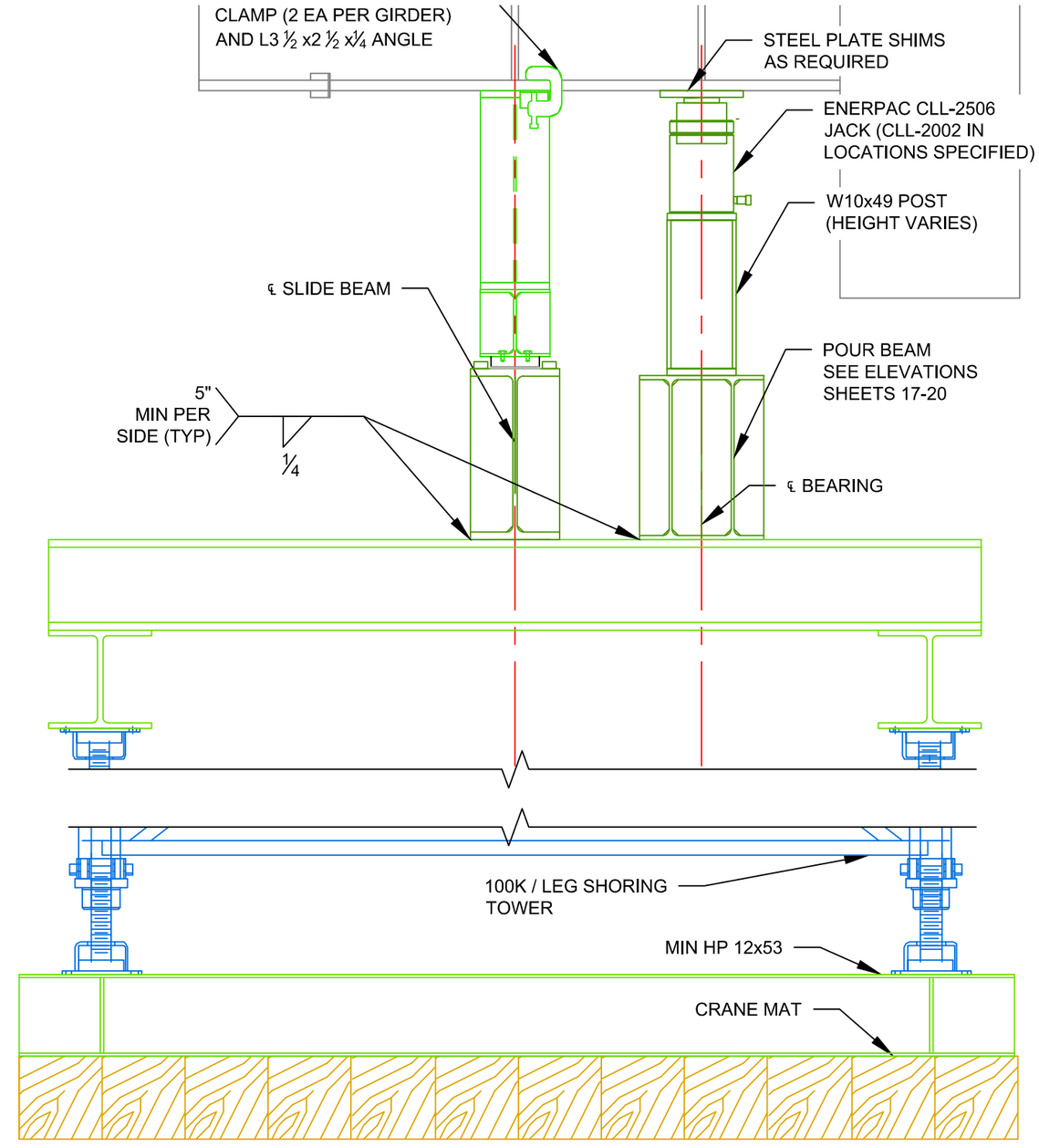

SECTION C-C

Revision No. & Date	Vermont Agency of Transportation			Drawing Status		Name	Date	PCL Civil Constructors, Inc. 3810 Northdale Blvd. Suite 200, Tampa Florida 33624 (813)-264-9500 ; Fax: (813)-264-6689	
				Mar 23 2015 9:46 AM	Drawn By	AJT	2/27/15		
	Road No.	County / City	Financial Project ID No.	FOR CONSTRUCTION	Design By	TMD / AJT	2/27/15	Submittal LATERAL SLIDE SYSTEM	PCL Project / Job No. I-91 Hartford / 5514001
	I-91	Windsor / Hartford	IM 091-2(79)		Check By	TMD	03/23/15	Drawing Title TYPICAL SECTIONS (2)	Sheet No. 11

STATE OF VERMONT
TIMOTHY J. DAVIS
NO. 97183
CIVIL
LICENSED
PROFESSIONAL ENGINEER

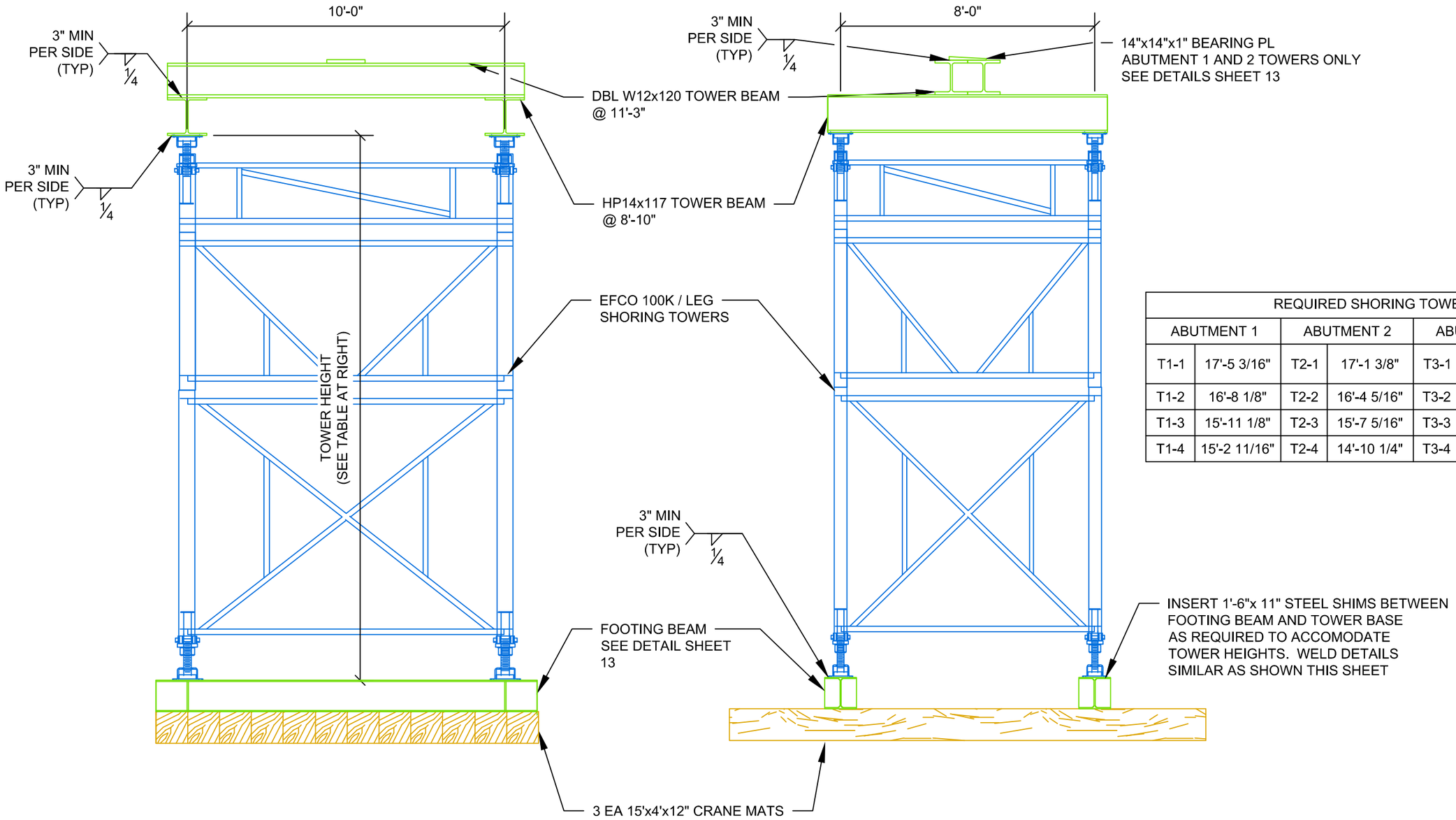

TYPICAL SHORING TOWER DETAILS - SIDE ELEVATION

TYPICAL SHORING TOWER DETAILS - UPSTATION VIEW

REQUIRED SHORING TOWER HEIGHT (ft.)							
ABUTMENT 1		ABUTMENT 2		ABUTMENT 3		ABUTMENT 4	
T1-1	17'-5 3/16"	T2-1	17'-1 3/8"	T3-1	7'-7 13/16"	T4-1	10'-8 3/4"
T1-2	16'-8 1/8"	T2-2	16'-4 5/16"	T3-2	7'-8 1/4"	T4-2	10'-8 3/4"
T1-3	15'-11 1/8"	T2-3	15'-7 5/16"	T3-3	7'-7 13/16"	T4-3	10'-8 3/4"
T1-4	15'-2 11/16"	T2-4	14'-10 1/4"	T3-4	7'-7 13/16"	T4-4	10'-8 3/4"

NOTE: 4 EA ¾"Ø A325 BOLTS MAY BE USED IN LIEU OF THE SHORING TOWER TO BEAM WELDED CONNECTION

Revision No. & Date	Vermont Agency of Transportation			Drawing Status		Name	Date	PCL Civil Constructors, Inc. 3810 Northdale Blvd. Suite 200, Tampa Florida 33624 (813)-264-9500 ; Fax: (813)-264-6689	
				Mar 23 2015 9:46 AM	Drawn By	AJT	2/27/15		
	Road No.	County / City	Financial Project ID No.	FOR CONSTRUCTION	Design By	TMD / AJT	2/27/15	Submittal LATERAL SLIDE SYSTEM	PCL Project / Job No. I-91 Hartford / 5514001
	I-91	Windsor / Hartford	IM 091-2(79)		Check By	TMD	03/23/15	Drawing Title SHORING TOWER DETAILS	Sheet No. 12

STATE OF VERMONT TIMOTHY DAVIS NO. 97183 CIVIL LICENSED PROFESSIONAL ENGINEER

Engineer's Seal

H:\District Office\Engineering\01 T10 Tampa Active Projects\5514001 - I-91 Hartford\30 Superstructure\08 Photos and Rails\01 CAD Files\Slide_System_P.dwg 3/23/2015 9:10 AM

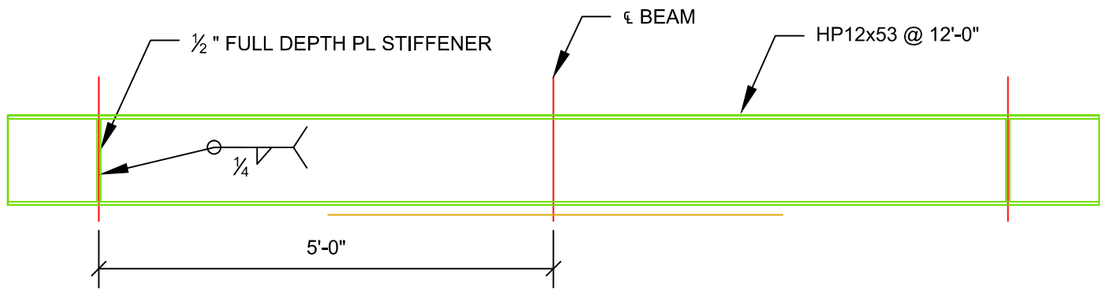

SHORING TOWER FOOTING BEAM

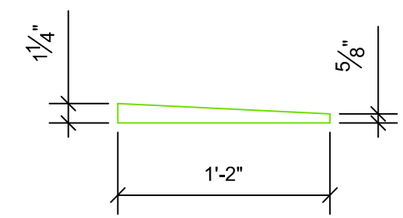

ABUTMENT 1 AND 2 TAPERED TOP PLATE

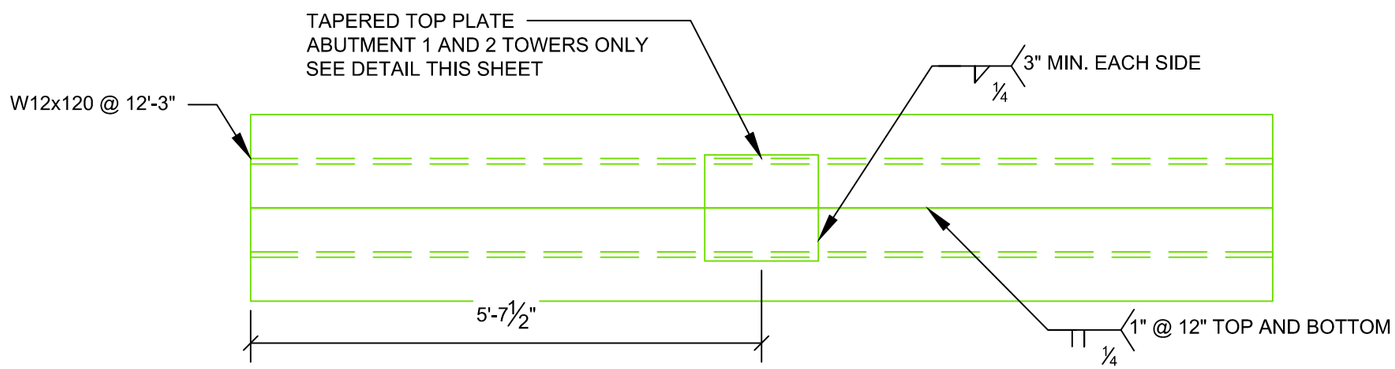

SHORING TOWER TOP BEAM

Revision No. & Date	Vermont Agency of Transportation			Timothy S. Davis	Drawing Status		Name	Date	PCL Civil Constructors, Inc. 3810 Northdale Blvd. Suite 200, Tampa Florida 33624 (813)-264-9500 ; Fax: (813)-264-6689	
				STATE OF VERMONT · TIMOTHY S. DAVIS · NO. 97183 · CIVIL · LICENSED · PROFESSIONAL ENGINEER	Mar 23 2015 9:46 AM	Drawn By	AJT	2/27/15		
	Road No.	County / City	Financial Project ID No.		FOR CONSTRUCTION	Design By	TMD / AJT	2/27/15	Submittal LATERAL SLIDE SYSTEM	PCL Project / Job No. I-91 Hartford / 5514001
	I-91	Windsor / Hartford	IM 091-2(79)			Check By	TMD	03/23/15	Drawing Title SHORING TOWER DETAILS (2)	Sheet No. 13

H:\District Office\Engineering\01 TIG Tampa Active Projects\5514001 - I-91 Hartford\50 Superstructure\58 Floats and Rafts\01 CAD Files\Slide_System_P.dwg 3/23/2015 9:10 AM

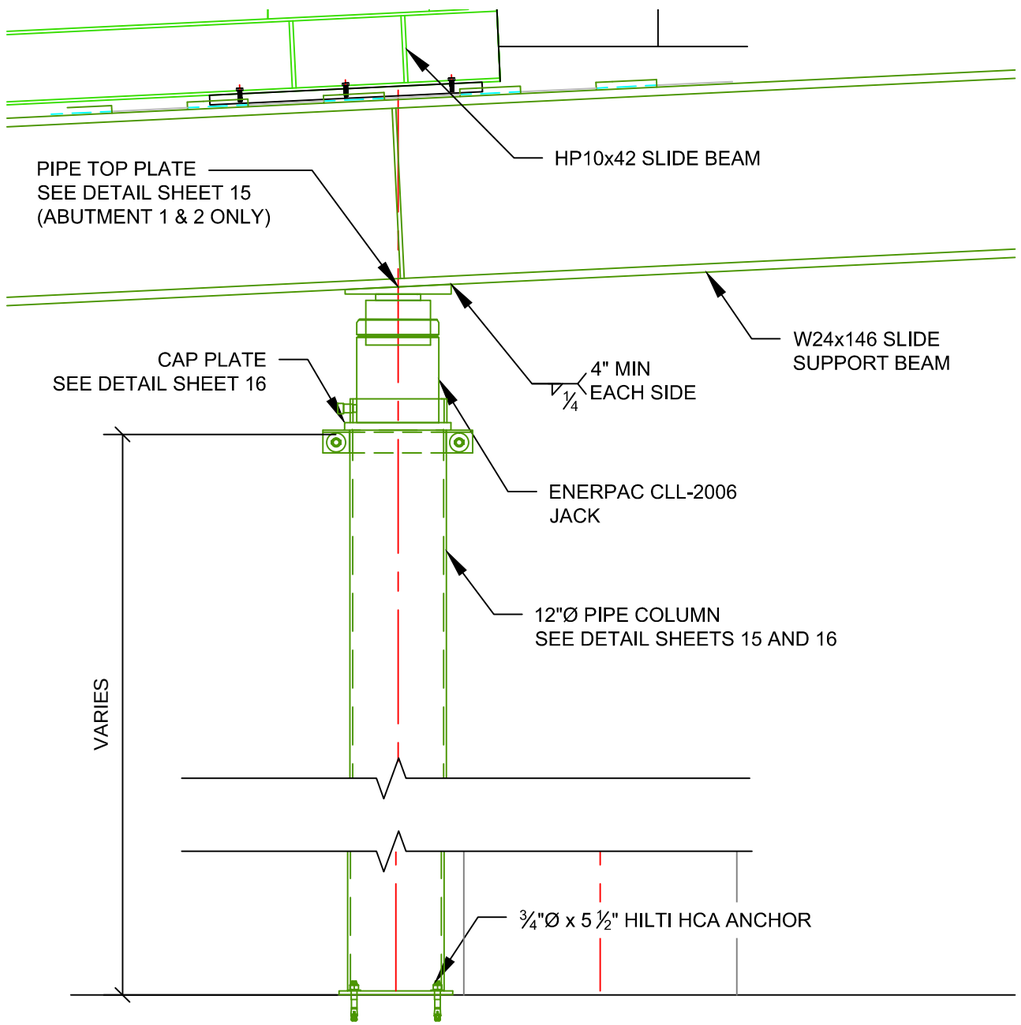

TYPICAL PIPE COLUMN DETAIL

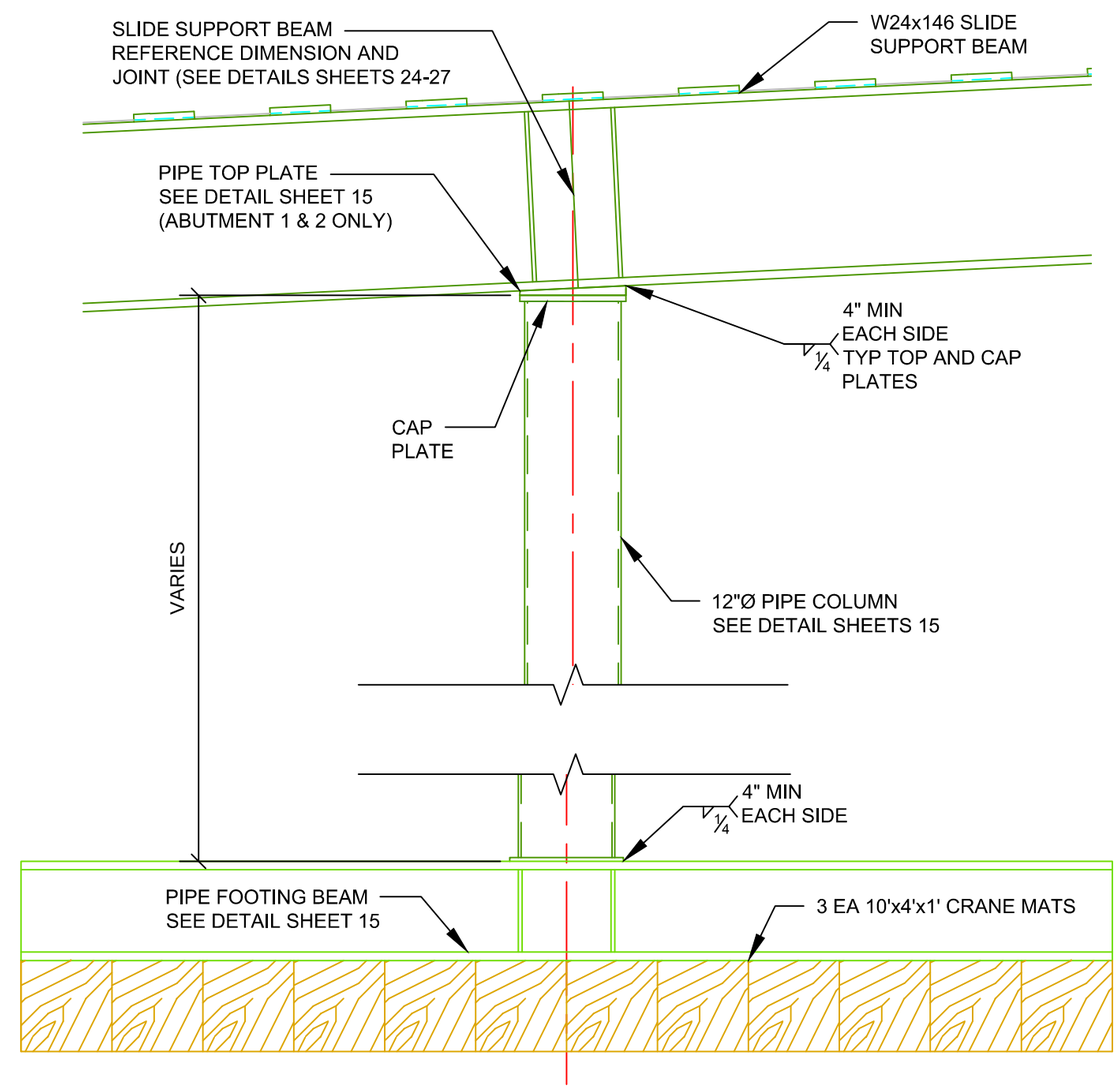

TYPICAL PIPE SHORING DETAIL

Revision No. & Date	Vermont Agency of Transportation			Timothy J. Davis	Drawing Status		Name	Date	PCL Civil Constructors, Inc. 3810 Northdale Blvd. Suite 200, Tampa Florida 33624 (813)-264-9500 ; Fax: (813)-264-6689	
				STATE OF VERMONT NO. 97183 CIVIL LICENSED PROFESSIONAL ENGINEER	Mar 23 2015 9:46 AM	Drawn By	AJT	2/27/15		
	Road No.	County / City	Financial Project ID No.		FOR CONSTRUCTION	Design By	TMD / AJT	2/27/15	Submittal LATERAL SLIDE SYSTEM	PCL Project / Job No. I-91 Hartford / 5514001
	I-91	Windsor / Hartford	IM 091-2(79)			Check By	TMD	03/23/15	Drawing Title PIPE SHORING	Sheet No. 14

N:\District Office\Engineering\01 TIG Tampa Active Projects\5514001 - I-91 Hartford\50 Superstructure\08 Floats and Rolls\01 CAD Files\Slide_System_P.dwg 3/23/2015 9:10 AM

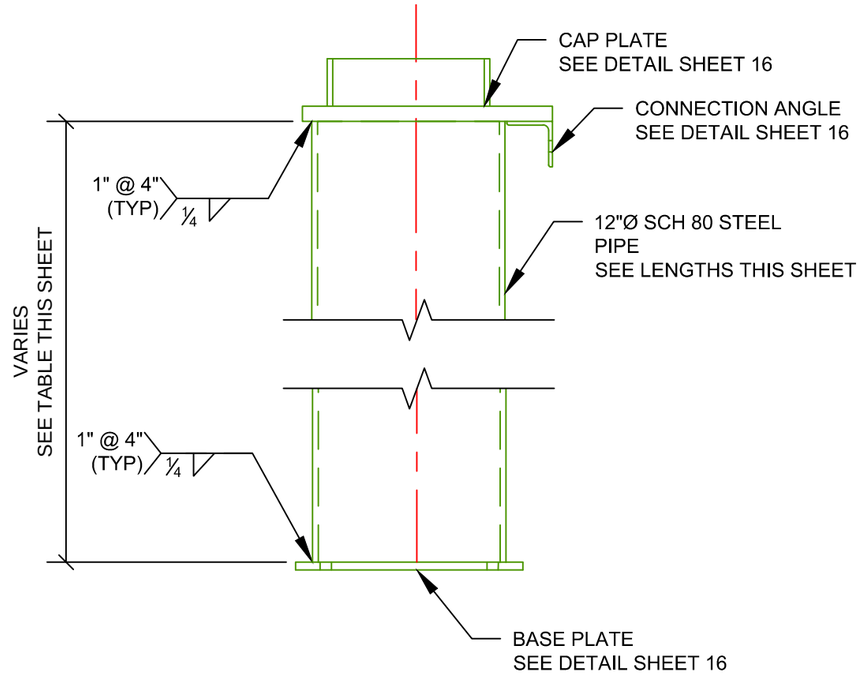

TYPICAL PIPE DETAIL

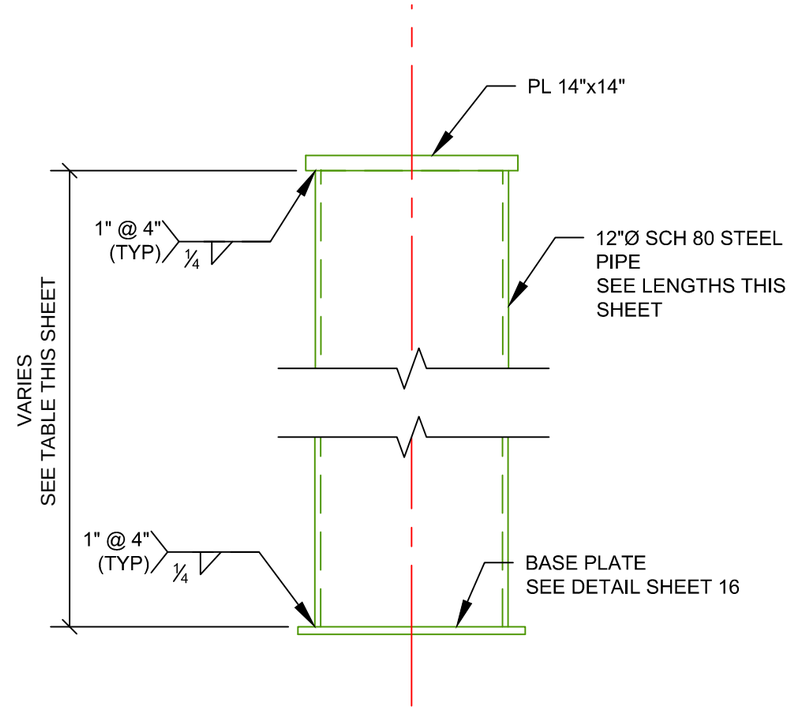

P1-1, P2-1, P3-5 AND P4-5 DETAIL

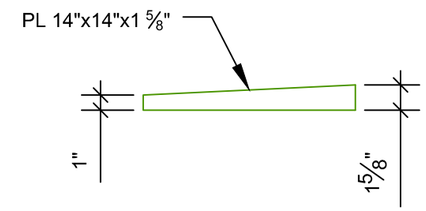

P1-1 AND P2-1
PIPE TOP PLATE

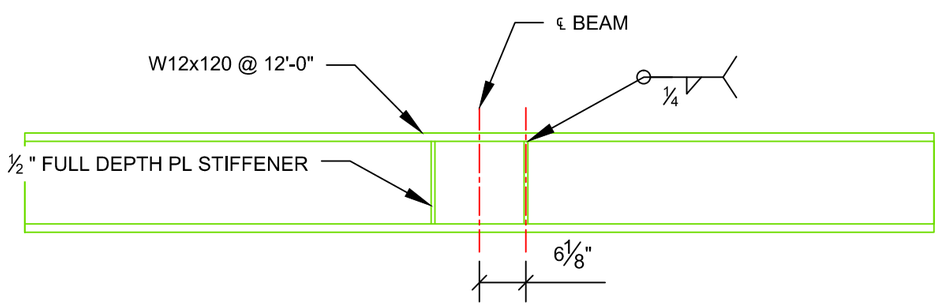

PIPE FOOTING BEAM

PIPE LENGTHS (ft.)							
ABUTMENT 1		ABUTMENT 2		ABUTMENT 3		ABUTMENT 4	
P1-1	15'-7 3/8"	P2-1	15'-3 3/16"	P3-1	10'-4 1/2"	P4-1	13'-5 3/8"
P1-2	16'-7 3/4"	P2-2	16'-3 13/16"	P3-2	10'-4 1/2"	P4-2	13'-5 3/8"
P1-3	15'-10 3/4"	P2-3	15'-6 1/4"	P3-3	10'-4 1/2"	P4-3	13'-5 3/8"
P1-4	15'-1 11/16"	P2-4	14'-9 3/16"	P3-4	10'-4 1/2"	P4-4	13'-5 3/8"
P1-5	14'-4 11/16"	P2-5	14'-0 3/16"	P3-5	8'-8 3/8"	P4-5	11'-9 1/4"

Revision No. & Date	Vermont Agency of Transportation			Engineer's Seal	Drawing Status		Name	Date	PCL Civil Constructors, Inc. 3810 Northdale Blvd. Suite 200, Tampa Florida 33624 (813)-264-9500 ; Fax: (813)-264-6689	
				STATE OF VERMONT TIMOTHY DAVIS NO. 97183 CIVIL LICENSED PROFESSIONAL ENGINEER	Mar 23 2015 9:46 AM	Drawn By	AJT	2/27/15		
	Road No.	County / City	Financial Project ID No.		FOR CONSTRUCTION	Design By	TMD / AJT	2/27/15	Submittal LATERAL SLIDE SYSTEM	PCL Project / Job No. I-91 Hartford / 5514001
	I-91	Windsor / Hartford	IM 091-2(79)			Check By	TMD	03/23/15	Drawing Title PIPE SHORING DETAILS	Sheet No. 15

H:\District Office\Engineering\01 TIG Tampa Active Projects\5514001 - I-91 Hartford\50 Superstructure\58 Floats and Rolls\01 CAD Files\Slide_System_P.dwg 3/23/2015 8:10 AM

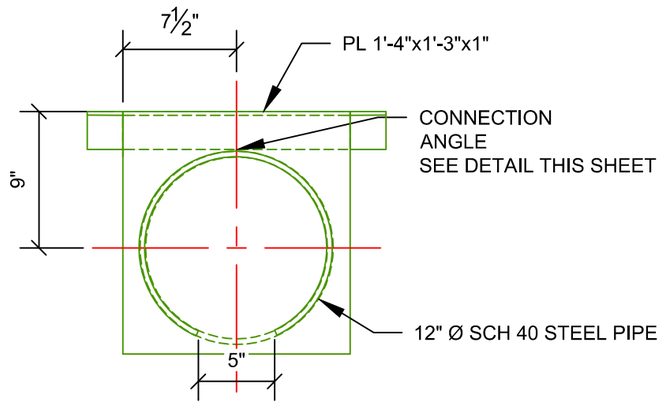

CAP PLATE

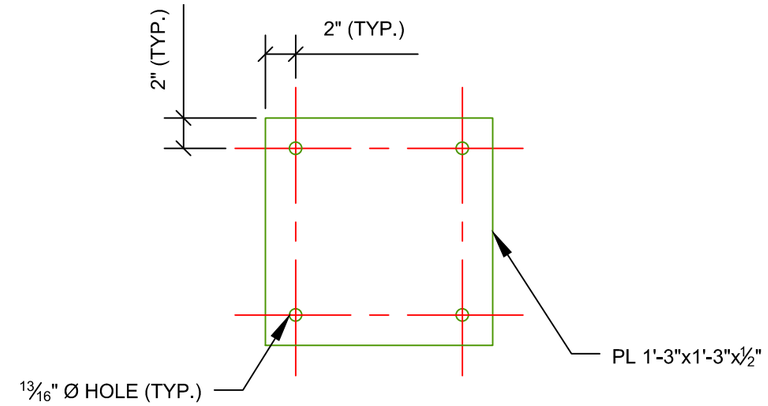

BASE PLATE

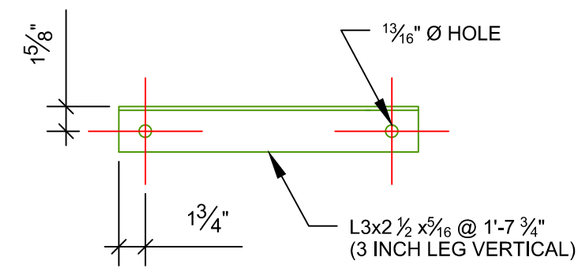

CONNECTION ANGLE

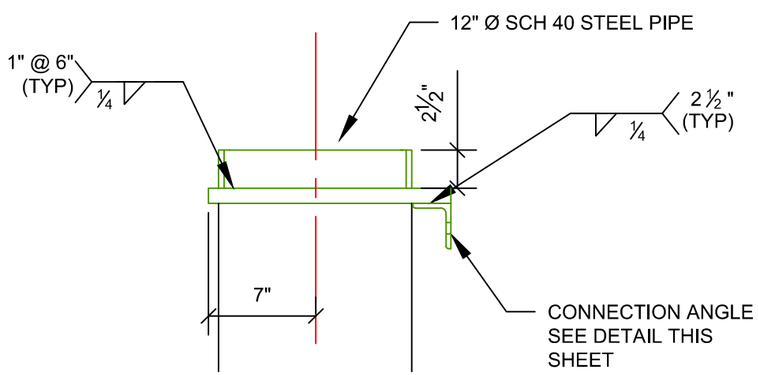

CAP PLATE

PIPE LENGTHS (ft.)							
ABUTMENT 1		ABUTMENT 2		ABUTMENT 3		ABUTMENT 4	
P1-1	15'-7 3/8"	P2-1	15'-3 3/16"	P3-1	10'-4 1/2"	P4-1	13'-5 3/8"
P1-2	16'-7 3/4"	P2-2	16'-3 13/16"	P3-2	10'-4 1/2"	P4-2	13'-5 3/8"
P1-3	15'-10 3/4"	P2-3	15'-6 1/4"	P3-3	10'-4 1/2"	P4-3	13'-5 3/8"
P1-4	15'-1 11/16"	P2-4	14'-9 3/16"	P3-4	10'-4 1/2"	P4-4	13'-5 3/8"
P1-5	14'-4 11/16"	P2-5	14'-0 3/16"	P3-5	8'-8 3/8"	P4-5	11'-9 1/4"

Revision No. & Date	Vermont Agency of Transportation			Drawing Status		Name	Date	PCL Civil Constructors, Inc. 3810 Northdale Blvd. Suite 200, Tampa Florida 33624 (813)-264-9500 ; Fax: (813)-264-6689	
				Mar 23 2015 9:46 AM	Drawn By	AJT	2/27/15		
	Road No.	County / City	Financial Project ID No.	FOR CONSTRUCTION	Design By	TMD / AJT	2/27/15	Submittal LATERAL SLIDE SYSTEM	PCL Project / Job No. I-91 Hartford / 5514001
	I-91	Windsor / Hartford	IM 091-2(79)		Check By	TMD	03/23/15	Drawing Title PIPE SHORING DETAILS (2)	Sheet No. 16

STATE OF VERMONT TIMOTHY J. DAVIS NO. 97183 CIVIL LICENSED PROFESSIONAL ENGINEER

Expires 3 Sec.

H:\District Office\Engineering\01 TIG Tampa Active Projects\5514001 - I-91 Hartford\05 Superstructure\SR Photos and Rolls\01 CAD Files\Slide_System_P.dwg 3/23/2015 8:11 AM

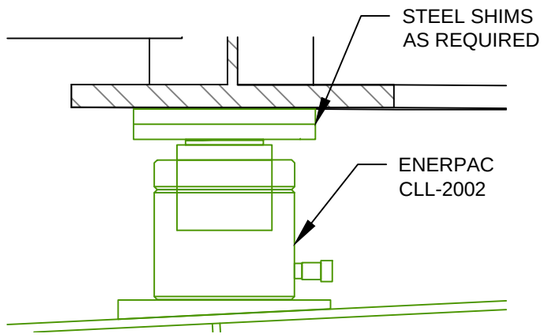

JACK DETAIL

ENGAGED DURING DECK PLACEMENT/CURING

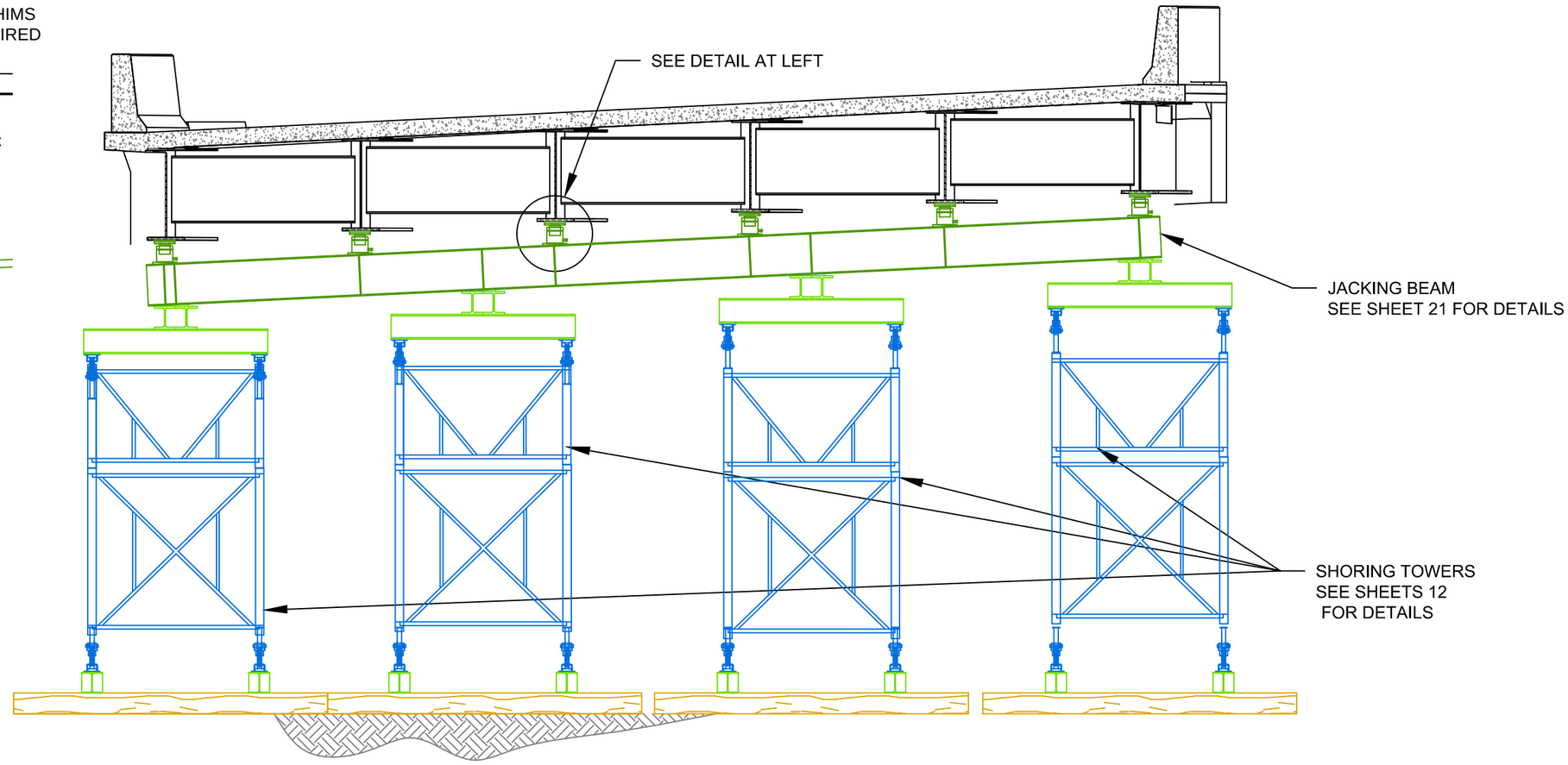

ABUTMENT 1 JACKING BEAM ELEVATION

FACING DOWNSTATION

BRIDGE SHOWN IN INITIAL POSITION

Revision No. & Date	Vermont Agency of Transportation			Drawing Status		Name	Date	PCL Civil Constructors, Inc. 3810 Northdale Blvd. Suite 200, Tampa Florida 33624 (813)-264-9500 ; Fax: (813)-264-6689	
				Mar 23 2015 9:46 AM	Drawn By	AJT	2/27/15		
	Road No.	County / City	Financial Project ID No.	FOR CONSTRUCTION	Design By	TMD / AJT	2/27/15	Submittal LATERAL SLIDE SYSTEM	PCL Project / Job No. I-91 Hartford / 5514001
	I-91	Windsor / Hartford	IM 091-2(79)		Check By	TMD	03/23/15	Drawing Title ABUTMENT 1 POUR BEAM ELEVATION	Sheet No. 17

STATE OF VERMONT TIMOTHY DAVIS NO. 97183 CIVIL LICENSED PROFESSIONAL ENGINEER

Timothy S. Davis

H:\District Office\Engineering\01 TIG Tampa Active Projects\5514001 - I-91 Hartford\05 Superstructure\08 Floats and Rolls\01 CAD Files\Slide_System_P.dwg 3/23/2015 9:11 AM

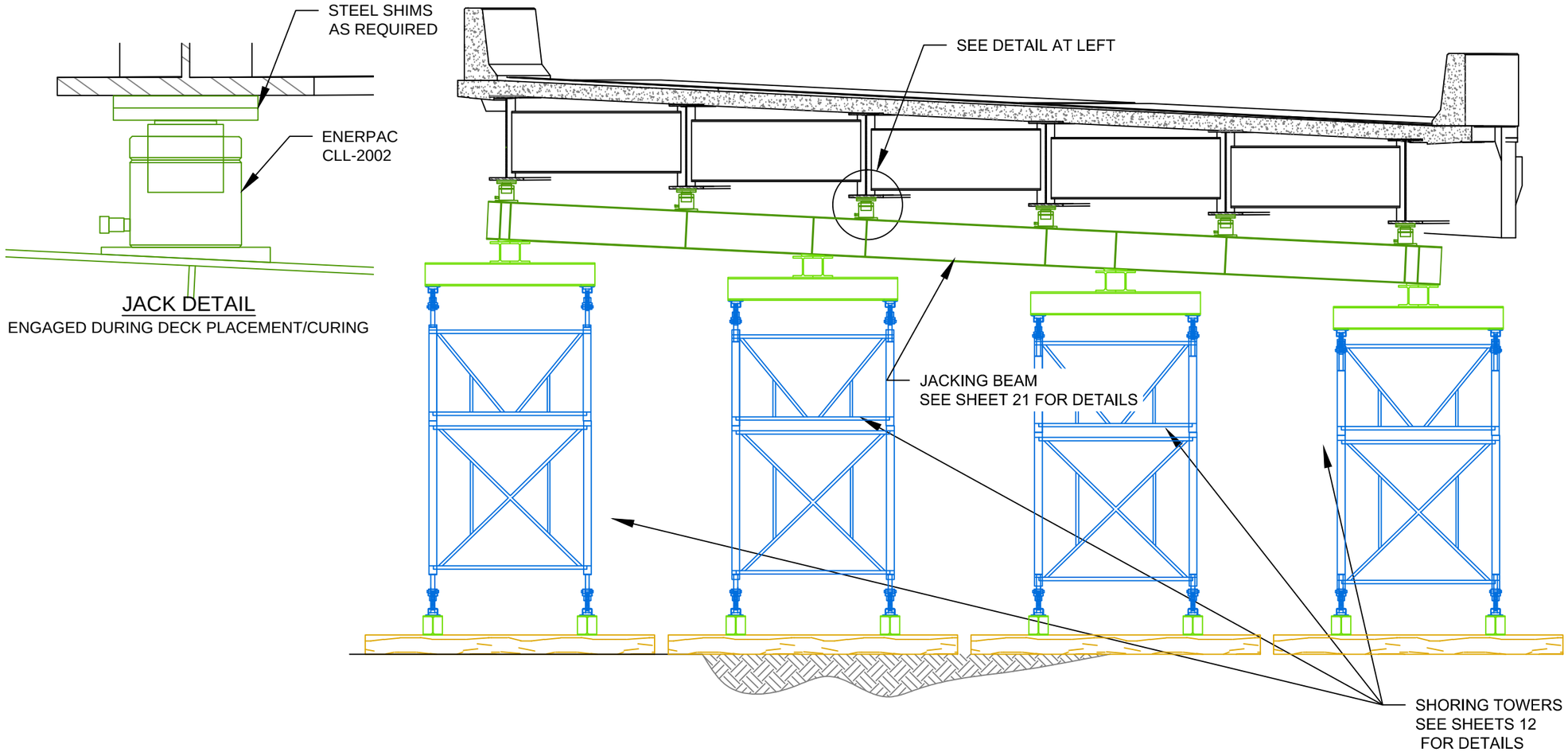

ABUTMENT 2 JACKING BEAM ELEVATION

FACING UPSTATION

BRIDGE SHOWN IN INITIAL POSITION

Revision No. & Date	Vermont Agency of Transportation			Drawing Status		Name	Date	PCL Civil Constructors, Inc. 3810 Northdale Blvd. Suite 200, Tampa Florida 33624 (813)-264-9500 ; Fax: (813)-264-6689	
				Mar 23 2015 9:46 AM	Drawn By	AJT	2/27/15		
	Road No.	County / City	Financial Project ID No.	FOR CONSTRUCTION	Design By	TMD / AJT	2/27/15	Submittal LATERAL SLIDE SYSTEM	PCL Project / Job No. I-91 Hartford / 5514001
	I-91	Windsor / Hartford	IM 091-2(79)		Check By	TMD	03/23/15	Drawing Title ABUTMENT 2 POUR BEAM ELEVATION	Sheet No. 18

STATE OF VERMONT
TIMOTHY DAVIS
NO. 97183
CIVIL
LICENSED
PROFESSIONAL ENGINEER

Electronic Seal

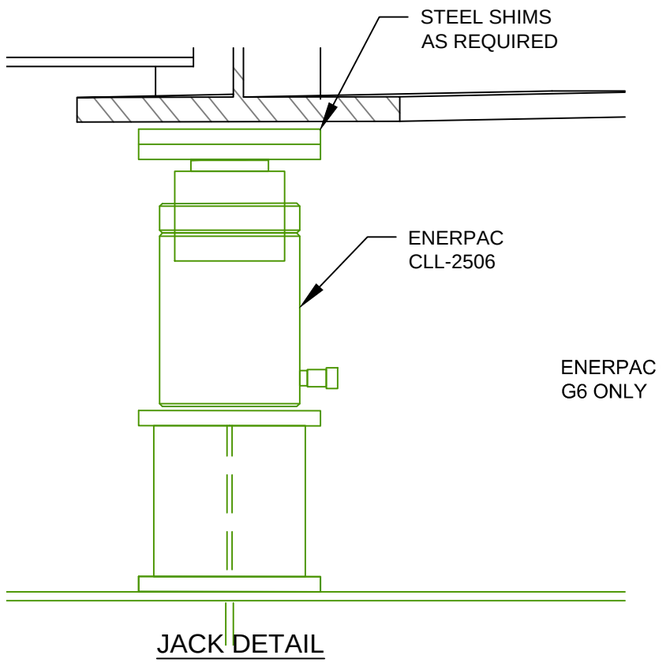

JACK DETAIL

ENGAGED DURING DECK PLACEMENT/CURING

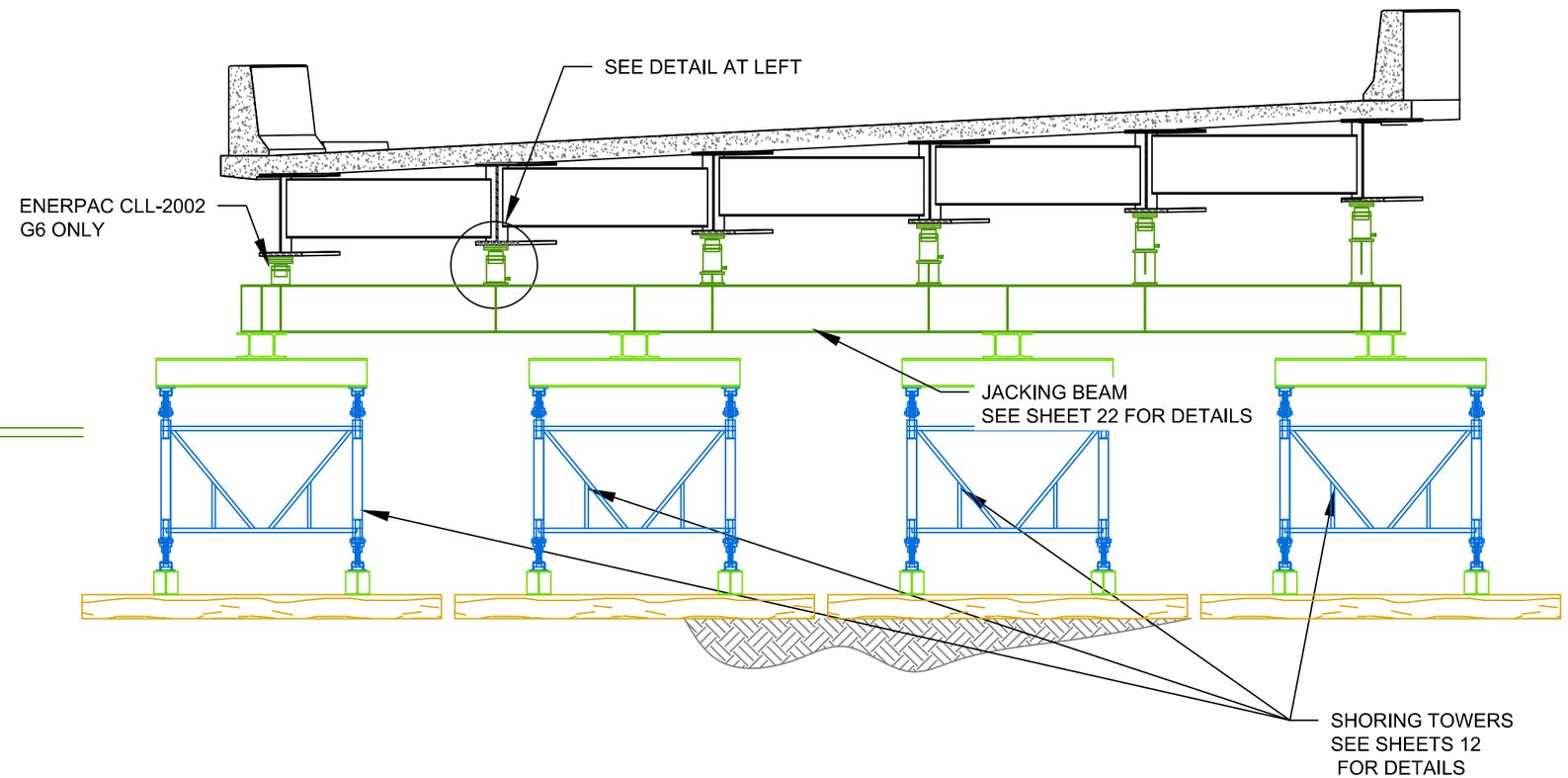

ABUTMENT 3 JACKING BEAM ELEVATION

FACING DOWNSTATION

BRIDGE SHOWN IN INITIAL POSITION

Revision No. & Date	Vermont Agency of Transportation			Drawing Status		Name	Date	PCL Civil Constructors, Inc. 3810 Northdale Blvd. Suite 200, Tampa Florida 33624 (813)-264-9500 ; Fax: (813)-264-6689	
				Mar 23 2015 9:46 AM	Drawn By	AJT	2/27/15		
	Road No.	County / City	Financial Project ID No.	FOR CONSTRUCTION	Design By	TMD / AJT	2/27/15	Submittal LATERAL SLIDE SYSTEM	PCL Project / Job No. I-91 Hartford / 5514001
	I-91	Windsor / Hartford	IM 091-2(79)		Check By	TMD	03/23/15	Drawing Title ABUTMENT 3 POUR BEAM ELEVATION	Sheet No. 19

STATE OF VERMONT
TIMOTHY DAVIS
NO. 97183
CIVIL
LICENSED
PROFESSIONAL ENGINEER

H:\District Office\Engineering\01 TIG Tampa Active Projects\5514001 - I-91 Hartford\30 Superstructure\38 Floats and Rolls\01 CAD Files\Slide_System_P.dwg 3/23/2015 9:11 AM

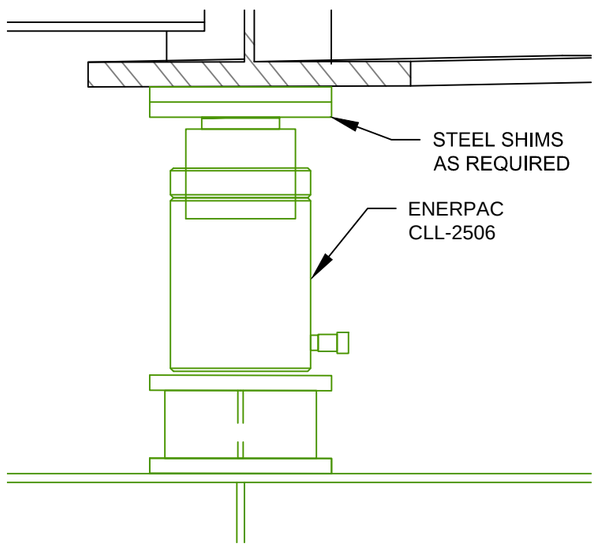

JACK DETAIL
ENGAGED DURING PLACEMENT/CURING

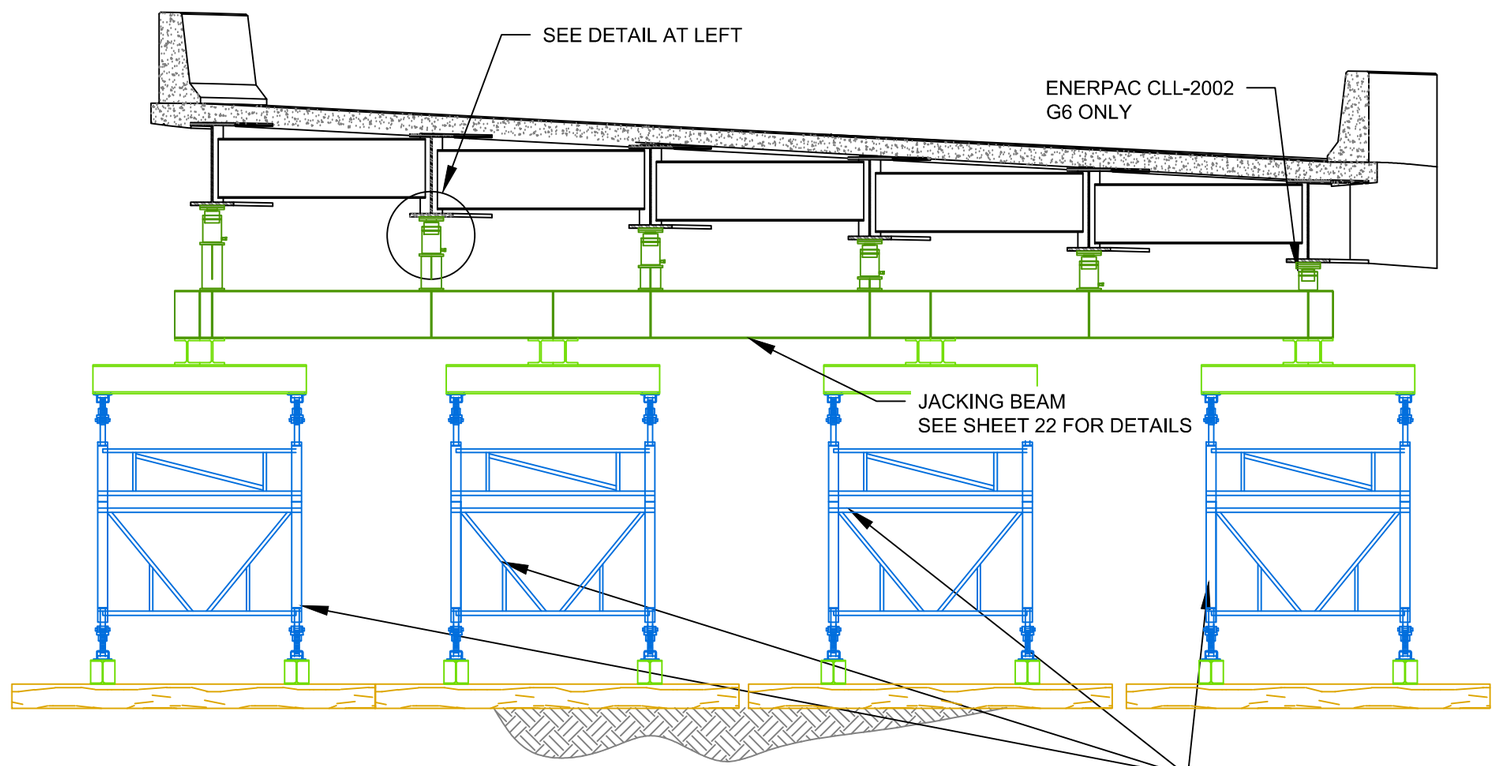

ABUTMENT 4 JACKING BEAM ELEVATION
FACING DOWNSTATION
BRIDGE SHOWN IN INITIAL POSITION

Revision No. & Date	Vermont Agency of Transportation			Drawing Status		Name	Date	PCL Civil Constructors, Inc. 3810 Northdale Blvd. Suite 200, Tampa Florida 33624 (813)-264-9500 ; Fax: (813)-264-6689	
				Mar 23 2015 9:46 AM	Drawn By	AJT	2/27/15		
	Road No.	County / City	Financial Project ID No.	FOR CONSTRUCTION	Design By	TMD / AJT	2/27/15	Submittal LATERAL SLIDE SYSTEM	PCL Project / Job No. I-91 Hartford / 5514001
	I-91	Windsor / Hartford	IM 091-2(79)		Check By	TMD	03/23/15	Drawing Title ABUTMENT 4 POUR BEAM ELEVATION	Sheet No. 20

Engineer's Seal
STATE OF VERMONT
TIMOTHY DAVIS
NO. 97183
CIVIL
LICENSED
PROFESSIONAL ENGINEER

H:\District Office\Engineering\01 TIG Tampa Active Projects\5514001 - I-91 Hartford\50 Superstructure\58 Floats and Rolls\01 CAD Files\Slide_System_P.dwg 3/23/2015 8:11 AM

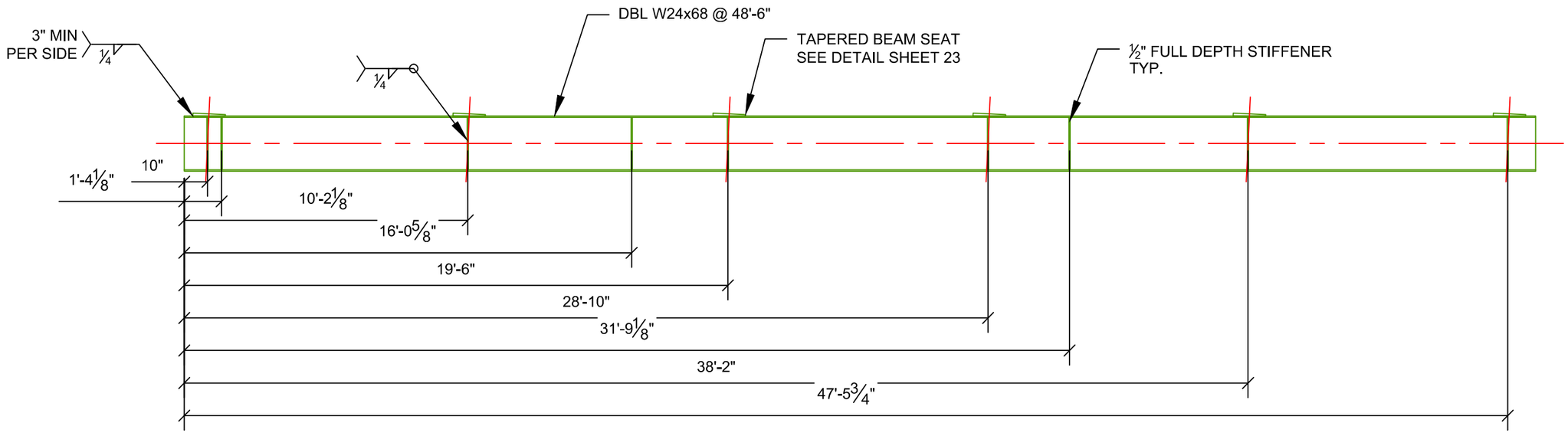

ABUTMENT 1 POUR BEAM

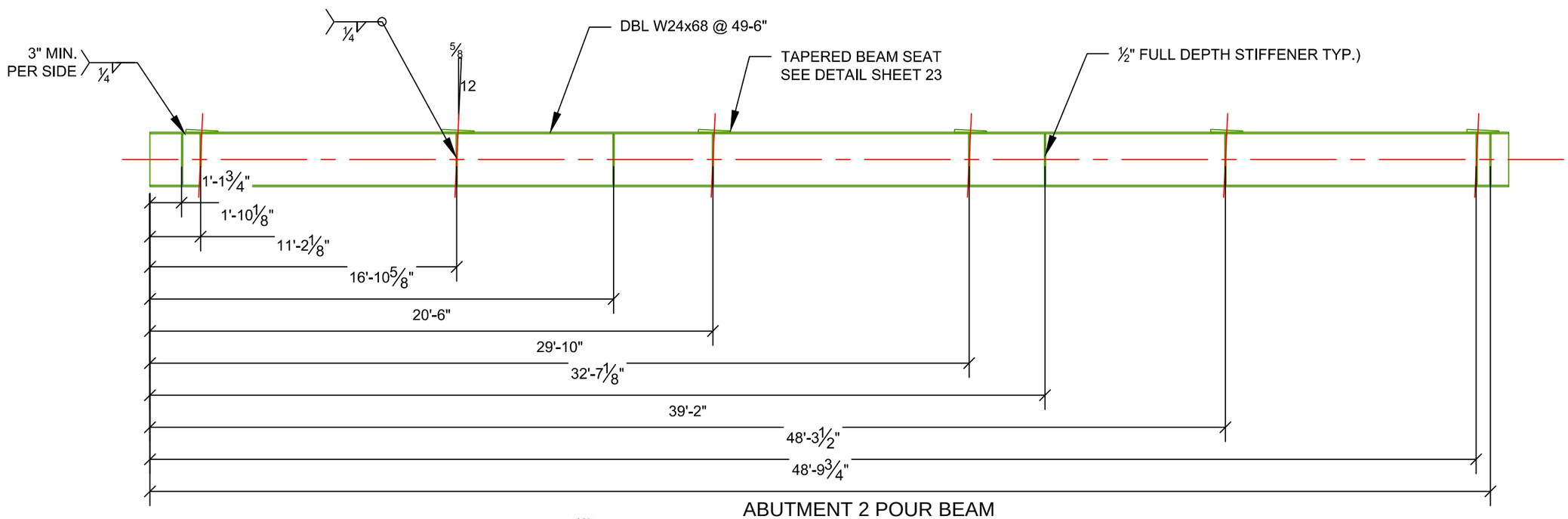

ABUTMENT 2 POUR BEAM

Revision No. & Date	Vermont Agency of Transportation				Drawing Status		Name	Date	PCL Civil Constructors, Inc. 3810 Northdale Blvd. Suite 200, Tampa Florida 33624 (813)-264-9500 ; Fax: (813)-264-6689	
					Mar 23 2015 9:46 AM	Drawn By	AJT	2/27/15		
	Road No.	County / City	Financial Project ID No.		FOR CONSTRUCTION	Design By	TMD / AJT	2/27/15	Submittal LATERAL SLIDE SYSTEM	PCL Project / Job No. I-91 Hartford / 5514001
	I-91	Windsor / Hartford	IM 091-2(79)			Check By	TMD	03/23/15	Drawing Title ABUTMENT 1-2 POUR BEAMS	Sheet No. 21

STATE OF VERMONT
TIMOTHY DAVIS
NO. 97183
CIVIL
LICENSED
PROFESSIONAL ENGINEER

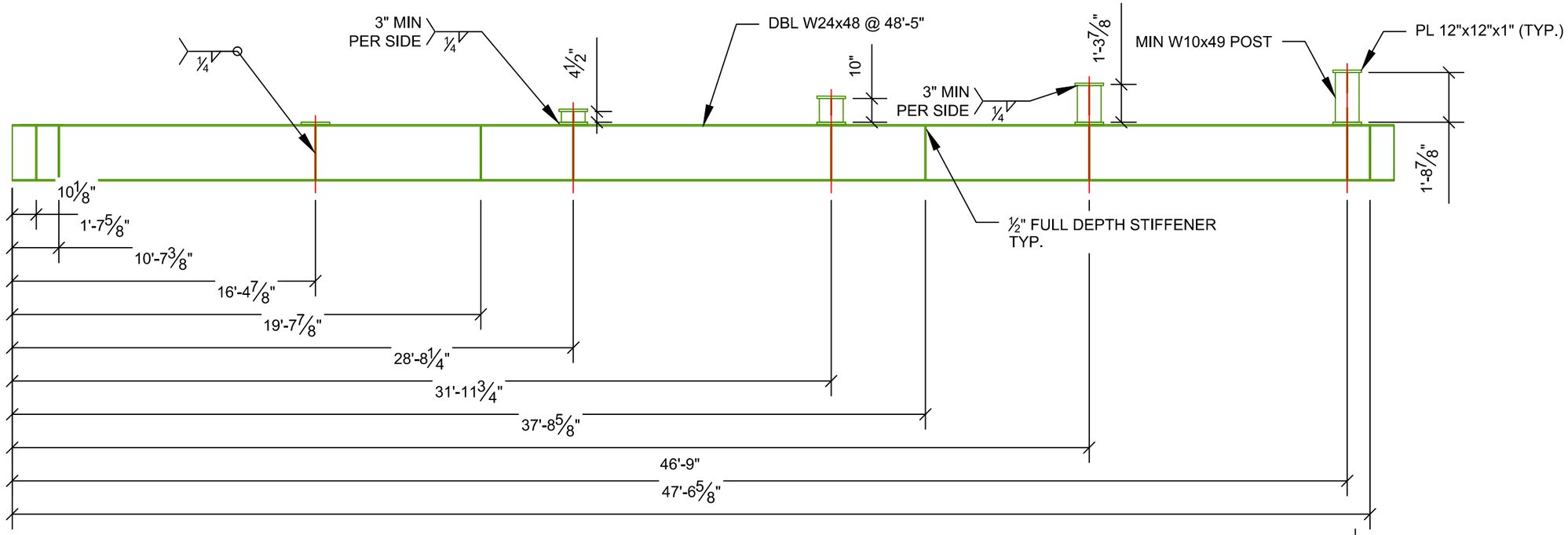

ABUTMENT 3 POUR BEAM

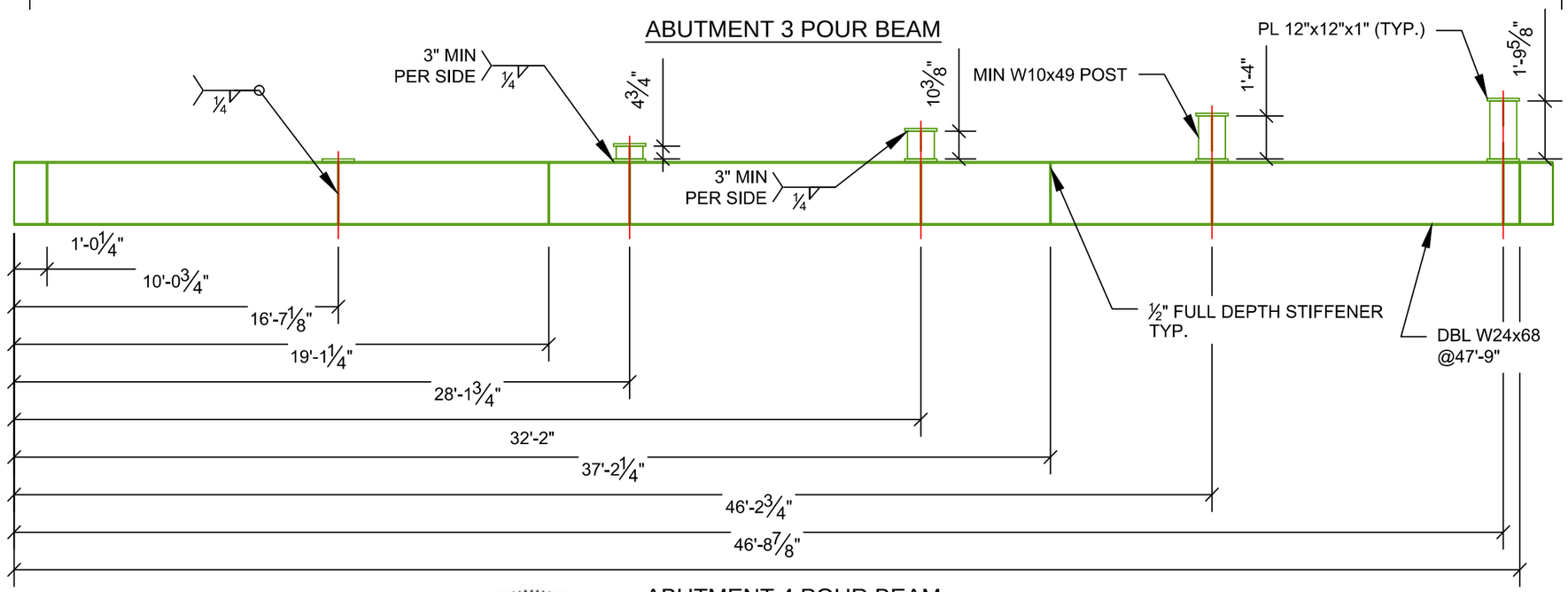

ABUTMENT 4 POUR BEAM

Revision No. & Date	Vermont Agency of Transportation			Drawing Status		Name	Date	PCL Civil Constructors, Inc. 3810 Northdale Blvd. Suite 200, Tampa Florida 33624 (813)-264-9500 ; Fax: (813)-264-6689	
				Mar 23 2015 9:46 AM	Drawn By	AJT	2/27/15		
	Road No.	County / City	Financial Project ID No.	FOR CONSTRUCTION	Design By	TMD / AJT	2/27/15	Submittal LATERAL SLIDE SYSTEM	PCL Project / Job No. I-91 Hartford / 5514001
	I-91	Windsor / Hartford	IM 091-2(79)		Check By	TMD	03/23/15	Drawing Title ABUTMENT 3-4 POUR BEAMS	Sheet No. 22

STATE OF VERMONT
TIMOTHY DAVIS
NO. 97183
CIVIL
LICENSED
PROFESSIONAL ENGINEER

Electronically Signed
3/23/2015 9:11 AM

H:\District Office\Engineering\01 TIG Tampa Active Projects\5514001 - I-91 Hartford\30 Superstructure\08 Photo and Rotek\01 CAD Files\SRS4_System_P.dwg 3/23/2015 9:11 AM

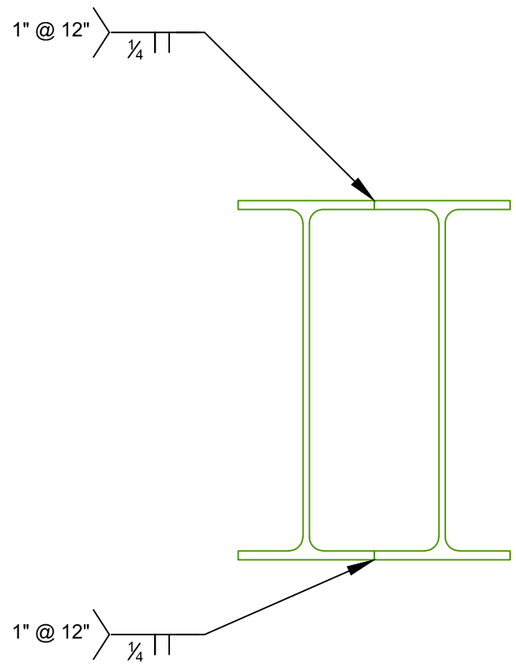

TYPICAL POUR BEAM SECTION

GRIND WELD FLUSH ALONG BEARING POINTS

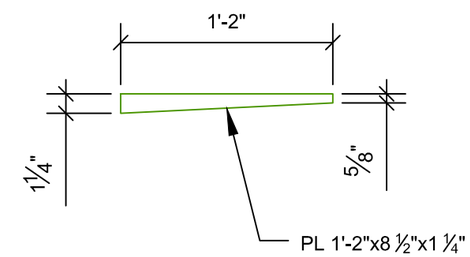

POUR BEAM - TAPERED BEAM SEAT

Revision No. & Date	Vermont Agency of Transportation			Drawing Status		Name	Date	PCL Civil Constructors, Inc. 3810 Northdale Blvd. Suite 200, Tampa Florida 33624 (813)-264-9500 ; Fax: (813)-264-6689	
				Mar 23 2015 9:47 AM	Drawn By	AJT	2/27/15		
	Road No.	County / City	Financial Project ID No.	FOR CONSTRUCTION	Design By	TMD / AJT	2/27/15	Submittal LATERAL SLIDE SYSTEM	PCL Project / Job No. I-91 Hartford / 5514001
	I-91	Windsor / Hartford	IM 091-2(79)		Check By	TMD	03/23/15	Drawing Title POUR BEAM DETAILS	Sheet No. 23

STATE OF VERMONT TIMOTHY J. DAVIS NO. 97183 CIVIL LICENSED PROFESSIONAL ENGINEER

Expires 3 Sep

H:\District Office\Engineering\01 TIG Tampa Active Projects\5514001 - I-91 Hartford\50 Superstructure\08 Floors and Rails\01 CAD Files\Slide_System_P.dwg 3/23/2015 9:11 AM

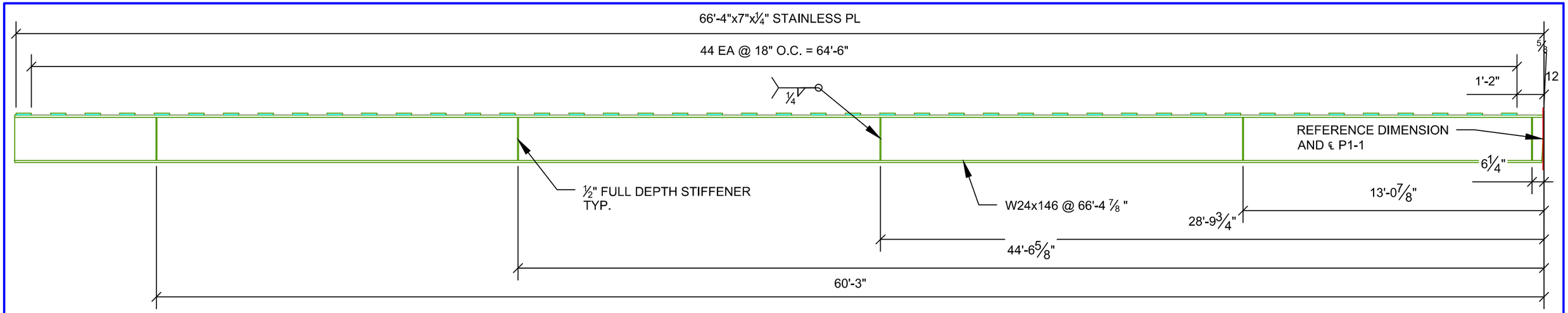

ABUTMENT 1 SLIDE SUPPORT BEAM 1

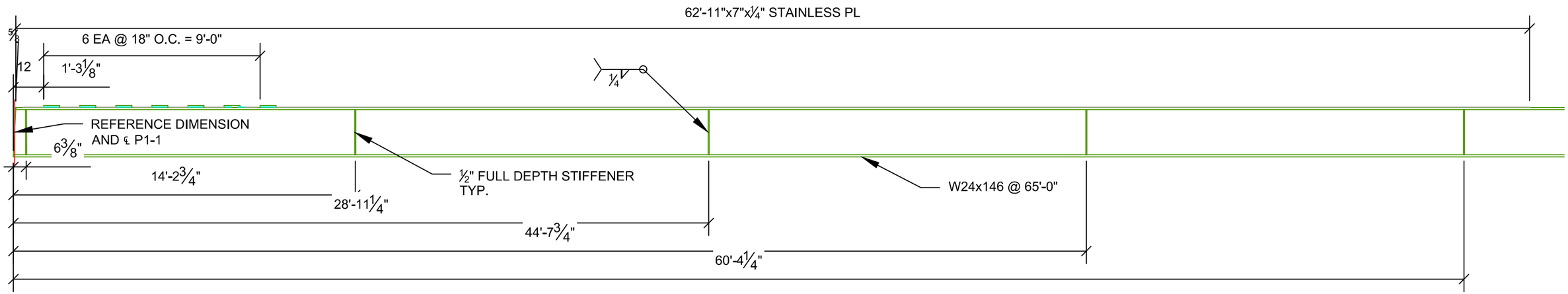

ABUTMENT 1 SLIDE SUPPORT BEAM 2

NOTE: FOR STAINLESS PLATE AND REACTION PLATE DETAIL SEE SHEET 28

Revision No. & Date	Vermont Agency of Transportation			Drawing Status		Name	Date	PCL Civil Constructors, Inc. 3810 Northdale Blvd. Suite 200, Tampa Florida 33624 (813)-264-9500 ; Fax: (813)-264-6689	
				Mar 23 2015 9:47 AM	Drawn By	AJT	2/27/15		
	Road No.	County / City	Financial Project ID No.	FOR CONSTRUCTION	Design By	TMD / AJT	2/27/15	Submittal LATERAL SLIDE SYSTEM	PCL Project / Job No. I-91 Hartford / 5514001
	I-91	Windsor / Hartford	IM 091-2(79)		Check By	TMD	03/23/15	Drawing Title ABUTMENT 1 SLIDE SUPPORT	Sheet No. 24

STATE OF VERMONT TIMOTHY J. DAVIS NO. 97183 CIVIL LICENSED PROFESSIONAL ENGINEER

Timothy J. Davis

N:\District Office\Engineering\01 TIG Tampa Active Projects\5514001 - I-91 Hartford\50 Superstructure\58 Fixed and Rolls\01 CAD Files\Slide_System_P.dwg 3/23/2015 9:11 AM

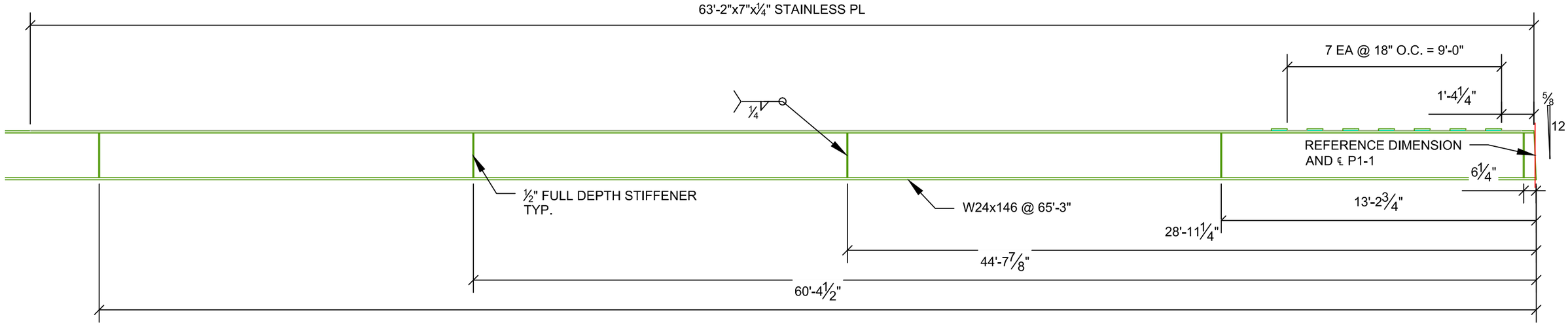

ABUTMENT 2 SLIDE SUPPORT BEAM 1

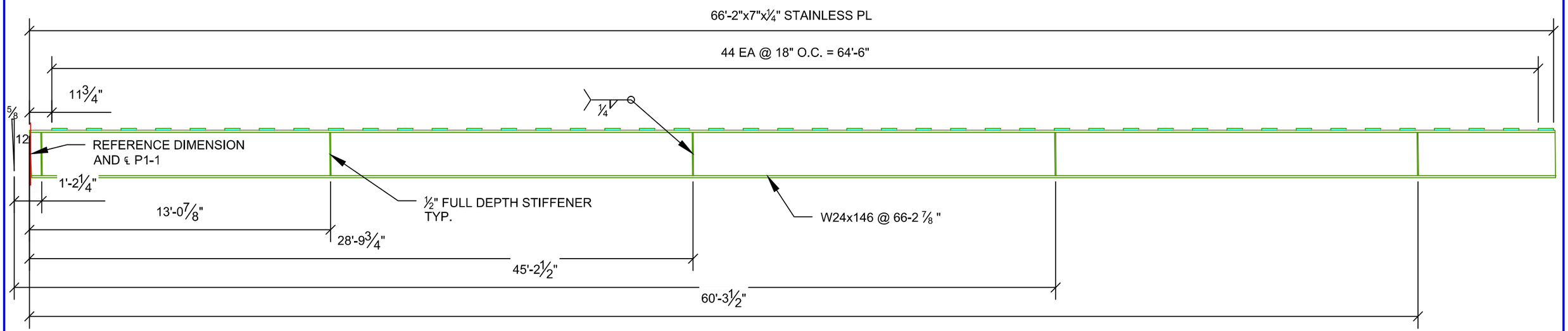

ABUTMENT 2 SLIDE SUPPORT BEAM 2

NOTE: FOR STAINLESS PLATE AND REACTION PLATE DETAIL SEE SHEET 28

Revision No. & Date	Vermont Agency of Transportation			Drawing Status		Name	Date	PCL Civil Constructors, Inc. 3810 Northdale Blvd. Suite 200, Tampa Florida 33624 (813)-264-9500 ; Fax: (813)-264-6689	
				Mar 23 2015 9:47 AM	Drawn By	AJT	2/27/15		
	Road No.	County / City	Financial Project ID No.	FOR CONSTRUCTION	Design By	TMD / AJT	2/27/15	Submittal LATERAL SLIDE SYSTEM	PCL Project / Job No. I-91 Hartford / 5514001
	I-91	Windsor / Hartford	IM 091-2(79)		Check By	TMD	03/23/15	Drawing Title ABUTMENT 2 SLIDE SUPPORT	Sheet No. 25

STATE OF VERMONT TIMOTHY J. DAVIS NO. 97183 CIVIL LICENSED PROFESSIONAL ENGINEER

Electronically Signed

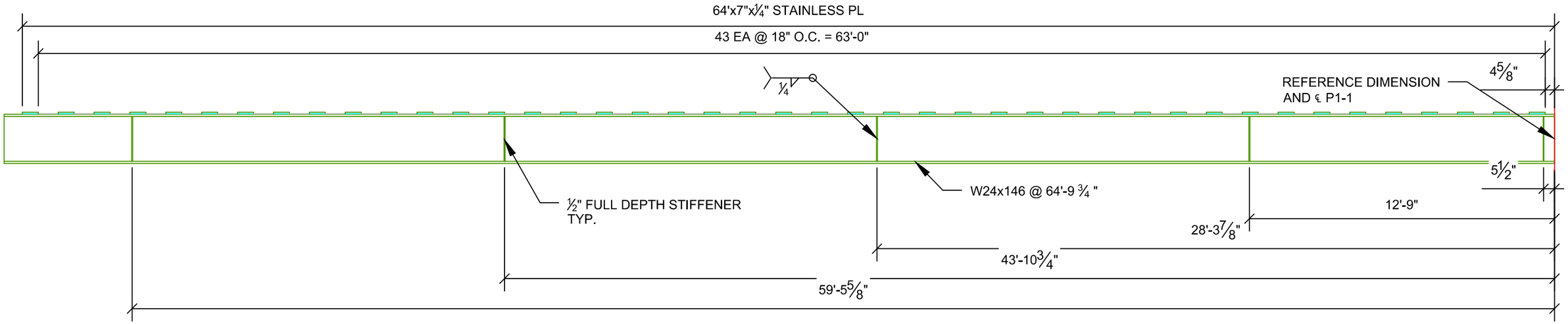

ABUTMENT 3 SLIDE SUPPORT BEAM 1

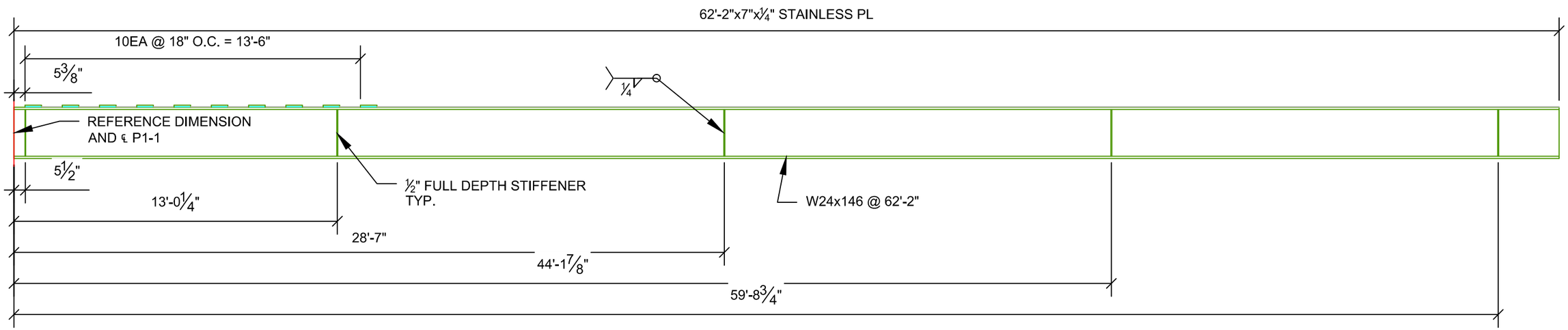

ABUTMENT 3 SLIDE SUPPORT BEAM 2

NOTE: FOR STAINLESS PLATE AND REACTION PLATE DETAIL SEE SHEET 28

Revision No. & Date	Vermont Agency of Transportation			Drawing Status		Name	Date	PCL Civil Constructors, Inc. 3810 Northdale Blvd. Suite 200, Tampa Florida 33624 (813)-264-9500 ; Fax: (813)-264-6689	
				Mar 23 2015 9:47 AM	Drawn By	AJT	2/27/15		
	Road No.	County / City	Financial Project ID No.	FOR CONSTRUCTION	Design By	TMD / AJT	2/27/15	Submittal LATERAL SLIDE SYSTEM	PCL Project / Job No. I-91 Hartford / 5514001
	I-91	Windsor / Hartford	IM 091-2(79)		Check By	TMD	03/23/15	Drawing Title ABUTMENT 3 SLIDE SUPPORT	Sheet No. 26

STATE OF VERMONT
TIMOTHY DAVIS
NO. 97183
CIVIL
LICENSED
PROFESSIONAL ENGINEER
Expires 3 Sep

H:\District Office\Engineering\01 TIG Tampa Active Projects\5514001 - I-91 Hartford\DO Superstructure\SR Floats and Rolls\01 CAD Files\Slide_System_P.dwg 3/23/2015 9:11 AM

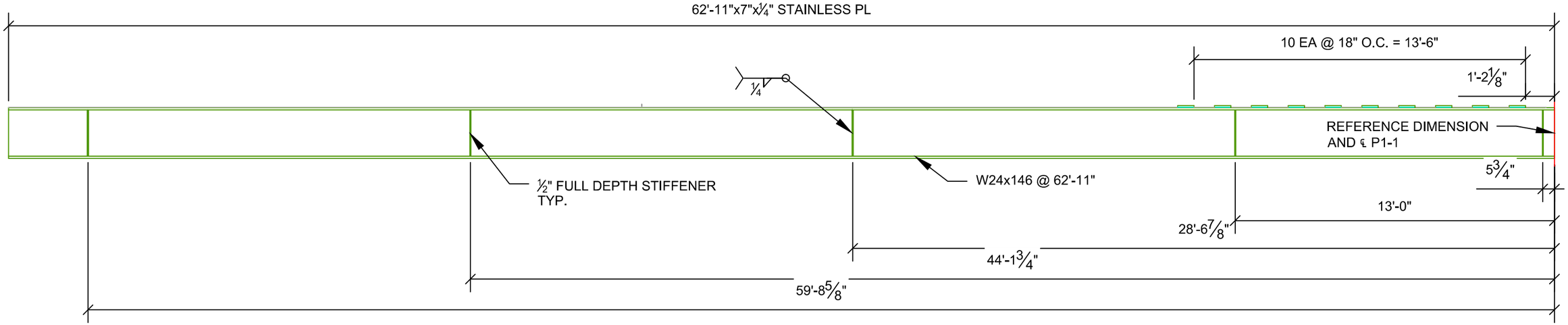

ABUTMENT 4 SLIDE SUPPORT BEAM 1

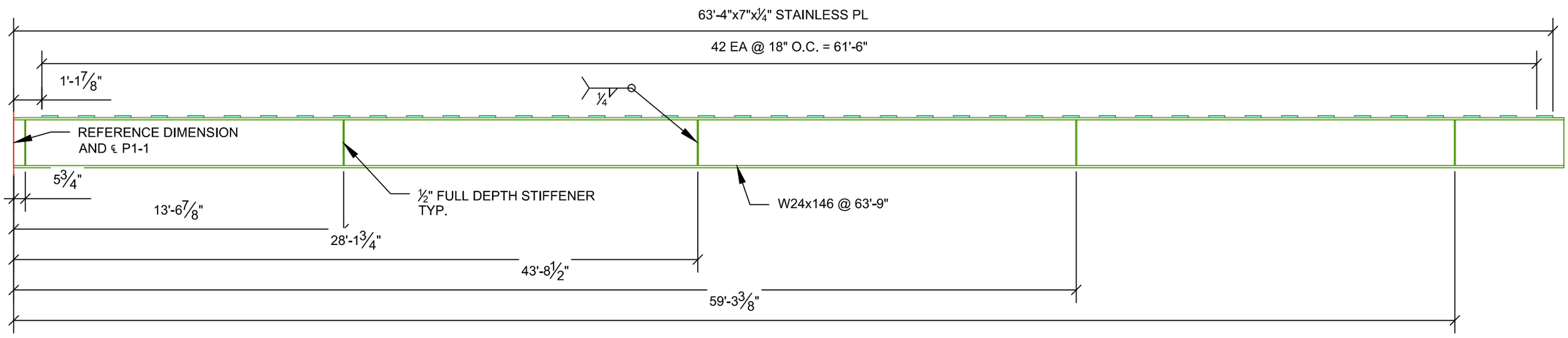

ABUTMENT 4 SLIDE SUPPORT BEAM 2

NOTE: FOR STAINLESS PLATE AND
REACTION PLATE DETAIL SEE
SHEET 28

Revision No. & Date	Vermont Agency of Transportation			Signature & Seal	Drawing Status		Name	Date	PCL Civil Constructors, Inc. 3810 Northdale Blvd. Suite 200, Tampa Florida 33624 (813)-264-9500 ; Fax: (813)-264-6689	
				STATE OF VERMONT TIMOTHY DAVIS NO. 97183 CIVIL LICENSED PROFESSIONAL ENGINEER	Mar 23 2015 9:47 AM	Drawn By	AJT	2/27/15		
	Road No.	County / City	Financial Project ID No.		FOR CONSTRUCTION	Design By	TMD / AJT	2/27/15	Submittal LATERAL SLIDE SYSTEM	PCL Project / Job No. I-91 Hartford / 5514001
	I-91	Windsor / Hartford	IM 091-2(79)			Check By	TMD	03/23/15	Drawing Title ABUTMENT 4 SLIDE SUPPORT	Sheet No. 27

N:\District Office\Engineering\01 TIG Tampa Active Projects\5514001 – I-91 Hartford\50 Superstructure\58 Floida and Rolla\01 CAD Files\Slide_System_P.dwg 3/23/2015 8:11 AM

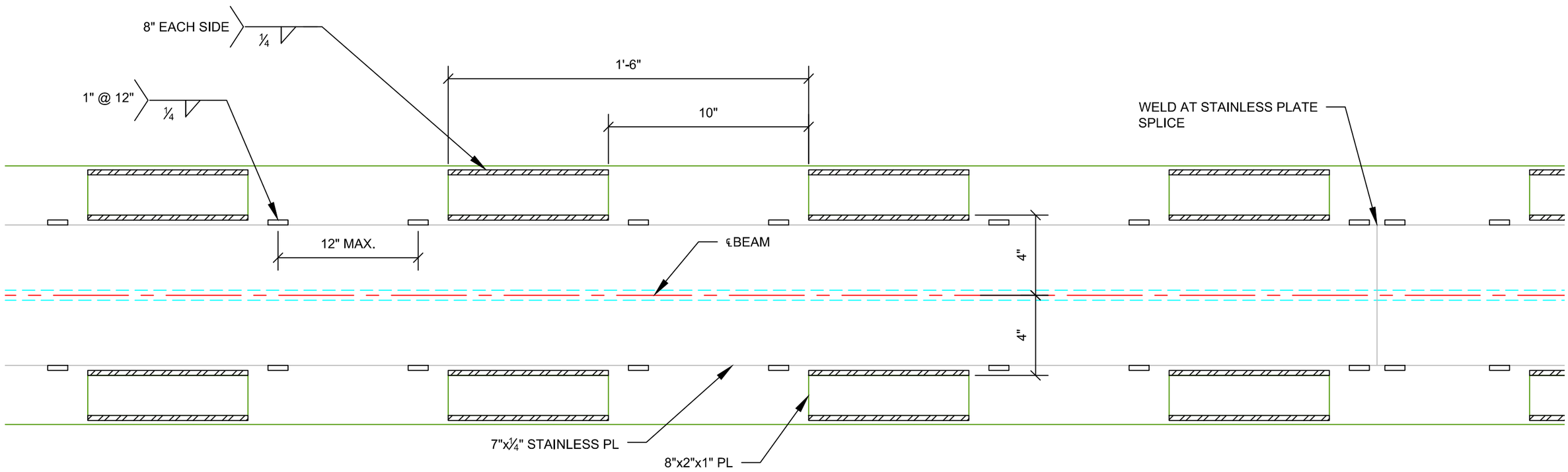

PLAN - TYPICAL SLIDE BEAM DETAIL

SUGGESTED WELD DETAILS SHOWN
TO ALLOW CLEARANCE BETWEEN WELDS ON DISSIMILAR METALS

Revision No. & Date	Vermont Agency of Transportation			Drawing Status		Name	Date	PCL Civil Constructors, Inc. 3810 Northdale Blvd. Suite 200, Tampa Florida 33624 (813)-264-9500 ; Fax: (813)-264-6689	
				Mar 23 2015 9:47 AM	Drawn By	AJT	2/27/15		
	Road No.	County / City	Financial Project ID No.	FOR CONSTRUCTION	Design By	TMD / AJT	2/27/15	Submittal LATERAL SLIDE SYSTEM	PCL Project / Job No. I-91 Hartford / 5514001
	I-91	Windsor / Hartford	IM 091-2(79)		Check By	TMD	03/23/15	Drawing Title SLIDE SUPPORT DETAILS	Sheet No. 28

STATE OF VERMONT TIMOTHY D. DAVIS NO. 97183 CIVIL LICENSED PROFESSIONAL ENGINEER
Expires 3 Sep

N:\District Office\Engineering\01 TIG Tampa Active Projects\5514001 - I-91 Hartford\50 Superstructure\08 Floats and Rails\01 CAD Files\Slide_System_P.dwg 3/23/2015 9:12 AM

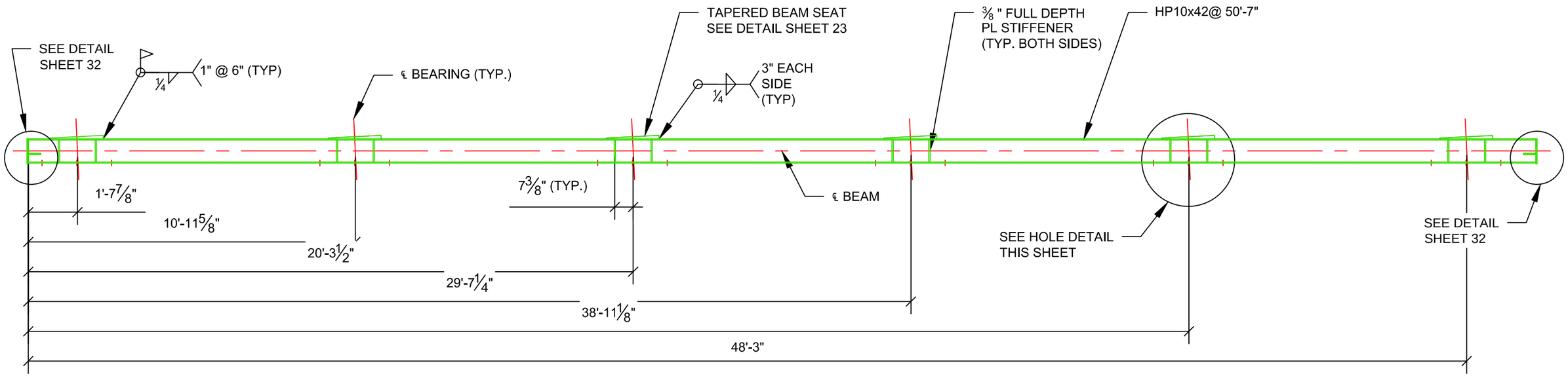

SLIDE BEAM ELEVATION- ABUTMENTS 1 AND 2

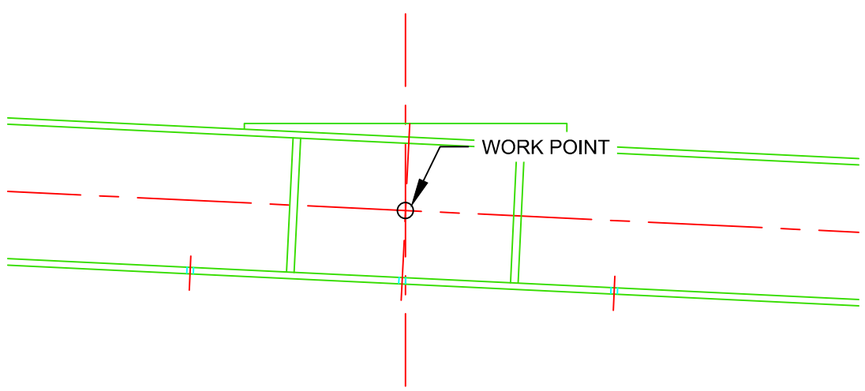

ELEVATION - HOLE DETAIL

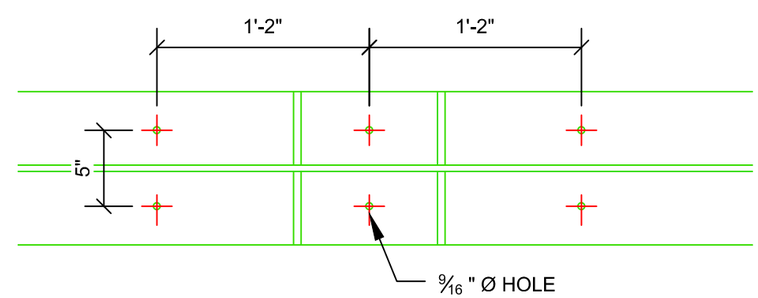

PLAN - HOLE DETAIL

Revision No. & Date	Vermont Agency of Transportation			Drawing Status		Name	Date	PCL Civil Constructors, Inc. 3810 Northdale Blvd. Suite 200, Tampa Florida 33624 (813)-264-9500 ; Fax: (813)-264-6689	
				Mar 23 2015 9:47 AM	Drawn By	AJT	2/27/15		
	Road No.	County / City	Financial Project ID No.	FOR CONSTRUCTION	Design By	TMD / AJT	2/27/15	Submittal LATERAL SLIDE SYSTEM	PCL Project / Job No. I-91 Hartford / 5514001
	I-91	Windsor / Hartford	IM 091-2(79)		Check By	TMD	03/23/15	Drawing Title ABUTMENT 1-2 SLIDE BEAMS	Sheet No. 29

Timothy S. Davis
STATE OF VERMONT TIMOTHY S. DAVIS NO. 97183 CIVIL LICENSED PROFESSIONAL ENGINEER

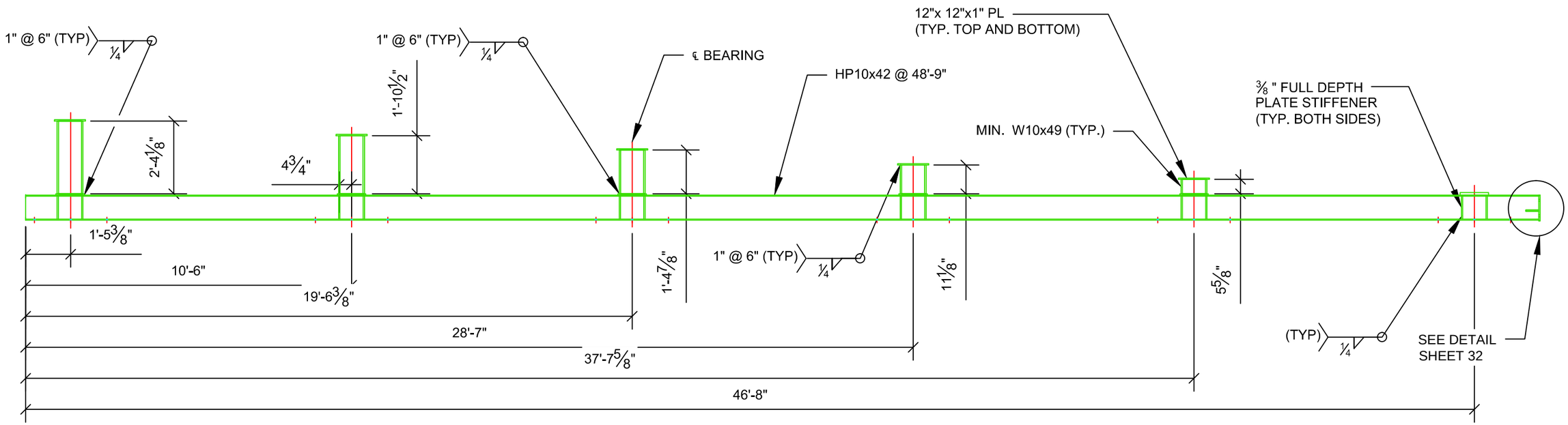

SLIDE BEAM ELEVATION- ABUTMENTS 3 AND 4

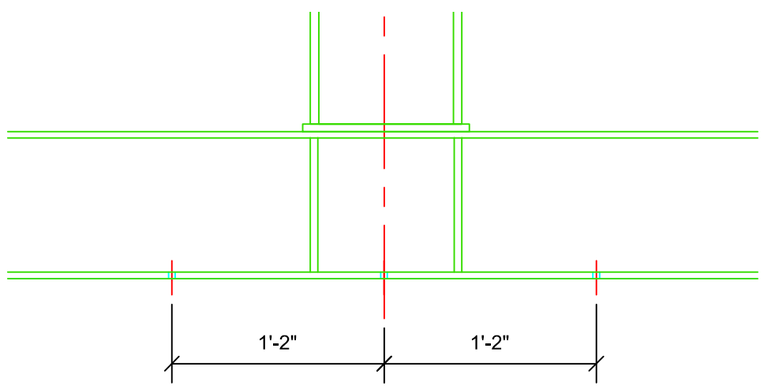

ELEVATION - HOLE DETAIL

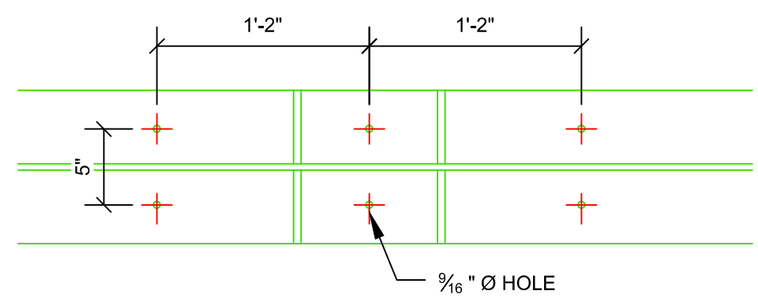

PLAN - HOLE DETAIL

Revision No. & Date	Vermont Agency of Transportation			Engineer's Seal	Drawing Status		Name	Date	PCL Civil Constructors, Inc. 3810 Northdale Blvd. Suite 200, Tampa Florida 33624 (813)-264-9500 ; Fax: (813)-264-6689	
				STATE OF VERMONT TIMOTHY DAVIS NO. 97183 CIVIL LICENSED PROFESSIONAL ENGINEER	Mar 23 2015 9:47 AM	Drawn By	AJT	2/27/15		
	Road No.	County / City	Financial Project ID No.		FOR CONSTRUCTION	Design By	TMD / AJT	2/27/15	Submittal LATERAL SLIDE SYSTEM	PCL Project / Job No. I-91 Hartford / 5514001
	I-91	Windsor / Hartford	IM 091-2(79)			Check By	TMD	03/23/15	Drawing Title ABUTMENT 3-4 SLIDE BEAMS	Sheet No. 30

H:\District Office\Engineering\01 TIG Tampa Active Projects\5514001 - I-91 Hartford\50 Superstructure\58 Floats and Rolls\01 CAD Files\Slide_System_P.dwg 3/23/2015 8:12 AM

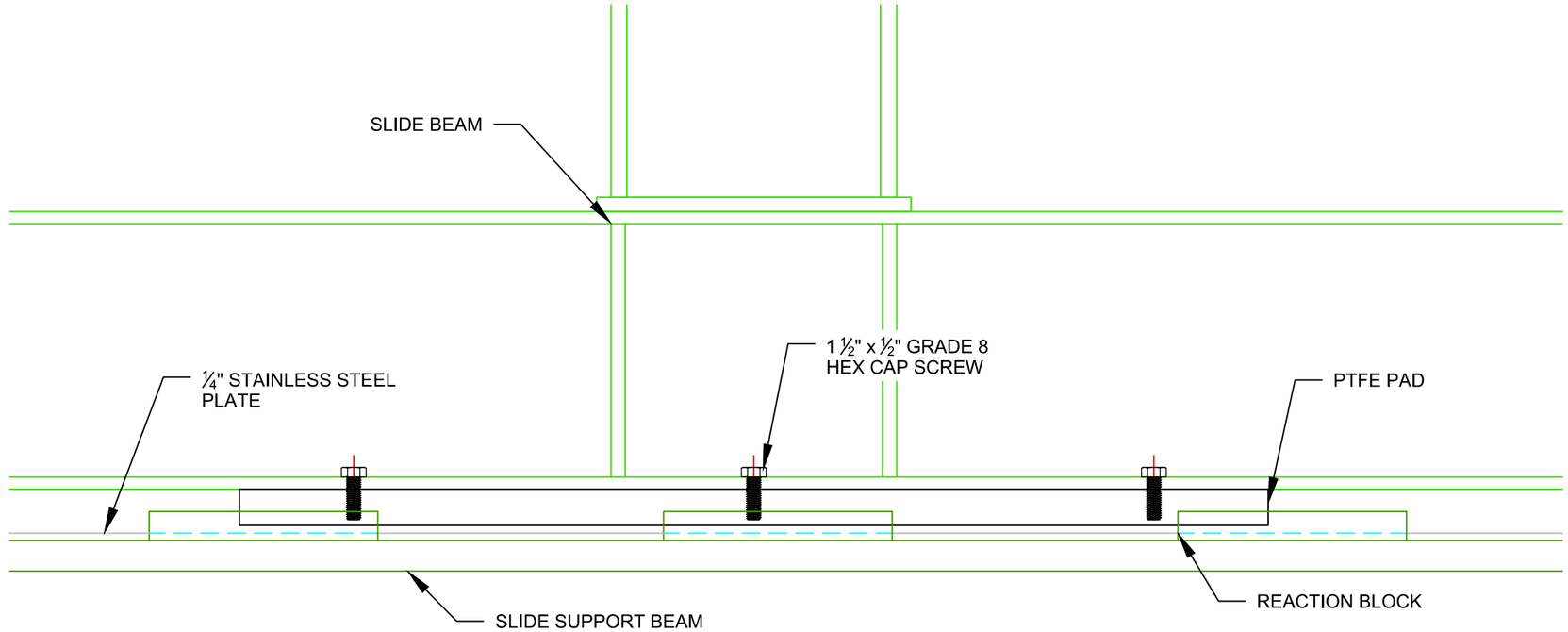

SLIDE SURFACE DETAIL

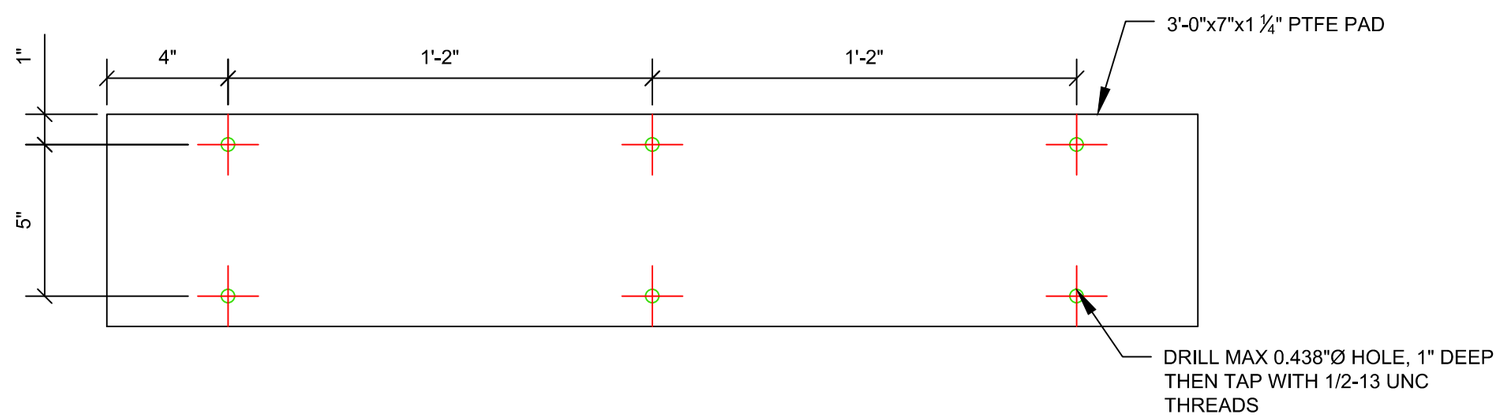

PTFE PAD DETAIL

Revision No. & Date	Vermont Agency of Transportation			Drawing Status		Name	Date	PCL Civil Constructors, Inc. 3810 Northdale Blvd. Suite 200, Tampa Florida 33624 (813)-264-9500 ; Fax: (813)-264-6689	
				Mar 23 2015 9:47 AM	Drawn By	AJT	2/27/15		
	Road No.	County / City	Financial Project ID No.	FOR CONSTRUCTION	Design By	TMD / AJT	2/27/15	Submittal LATERAL SLIDE SYSTEM	PCL Project / Job No. I-91 Hartford / 5514001
	I-91	Windsor / Hartford	IM 091-2(79)		Check By	TMD	03/23/15	Drawing Title SLIDE BEAM DETAILS	Sheet No. 31

Timothy S. Davis
STATE OF VERMONT
TIMOTHY S. DAVIS
NO. 97183
CIVIL
LICENSED
PROFESSIONAL ENGINEER

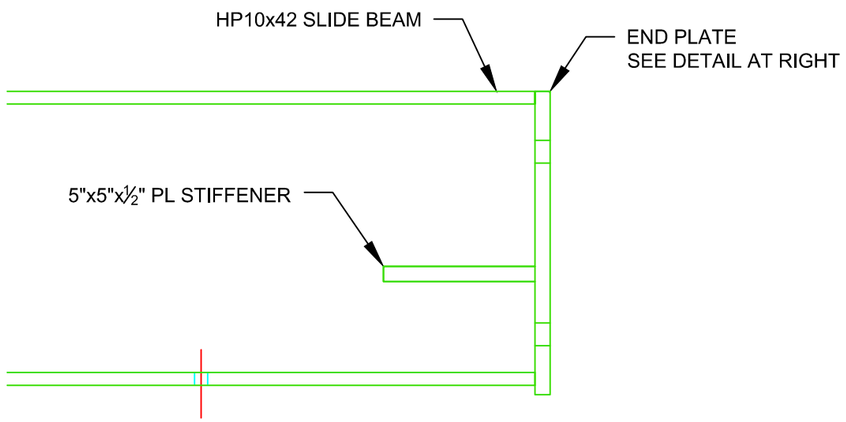

END PLATE ELEVATION

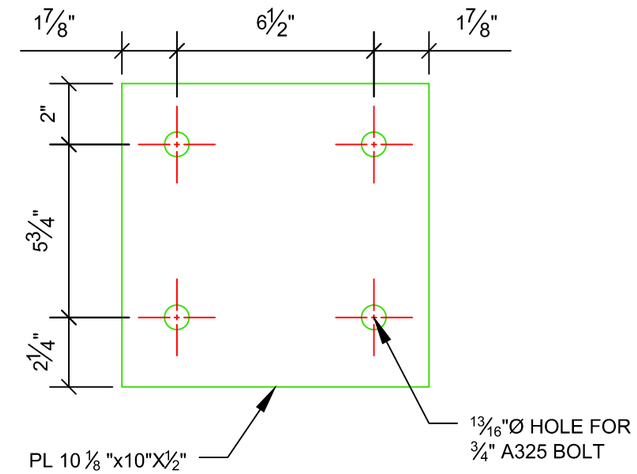

END PLATE DETAIL

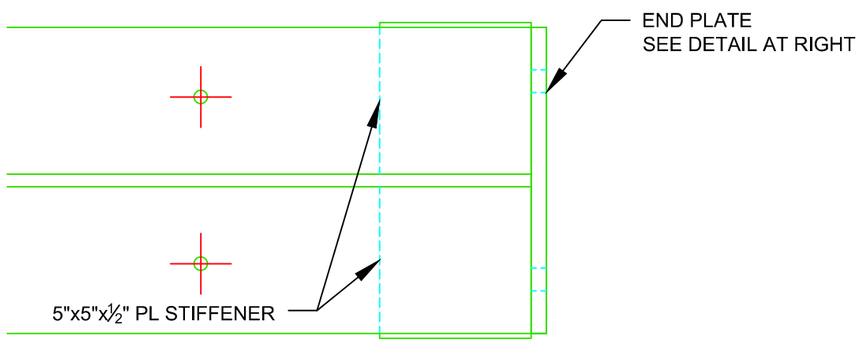

END PLATE PLAN

Revision No. & Date	Vermont Agency of Transportation			Engineer's Seal	Drawing Status		Name	Date	PCL Civil Constructors, Inc. 3810 Northdale Blvd. Suite 200, Tampa Florida 33624 (813)-264-9500 ; Fax: (813)-264-6689	
				STATE OF VERMONT TIMOTHY DAVIS NO. 97183 CIVIL LICENSED PROFESSIONAL ENGINEER	Mar 23 2015 9:47 AM	Drawn By	AJT	2/27/15		
	Road No.	County / City	Financial Project ID No.		FOR CONSTRUCTION	Design By	TMD / AJT	2/27/15	Submittal LATERAL SLIDE SYSTEM	PCL Project / Job No. I-91 Hartford / 5514001
	I-91	Windsor / Hartford	IM 091-2(79)			Check By	TMD	03/23/15	Drawing Title SLIDE BEAM DETAILS (2)	Sheet No. 32

H:\District Office\Engineering\01 TIG Tampa Active Projects\5514001 - I-91 Hartford\50 Superstructure\58 Floats and Rods\01 CAD Files\Slide_System_P.dwg 3/23/2015 8:12 AM

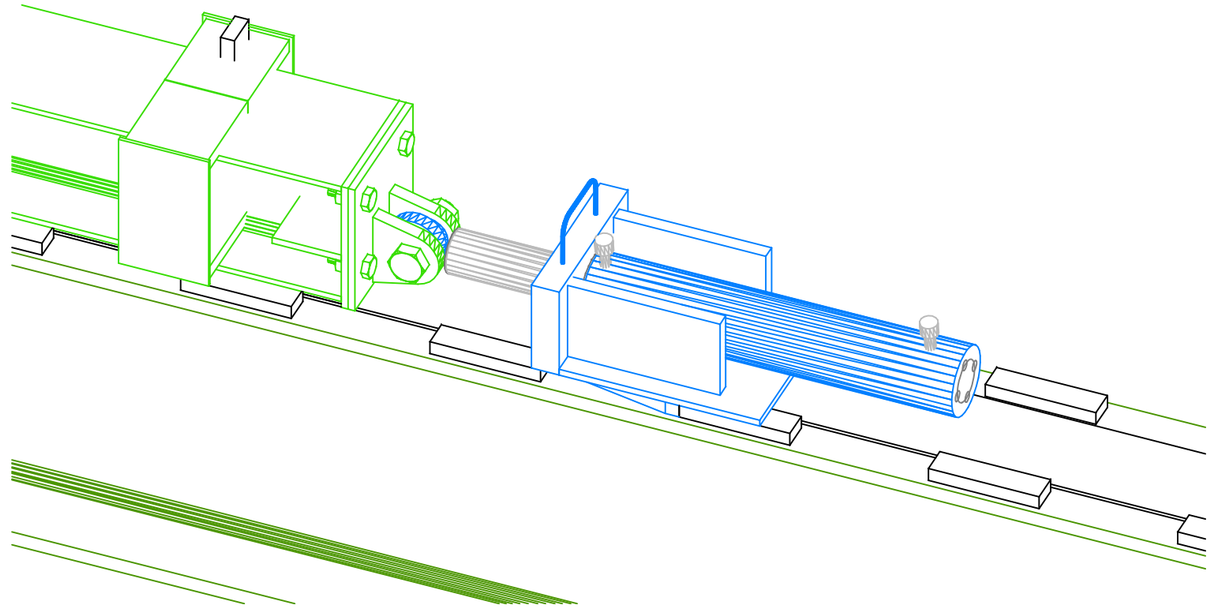

SLIDE SYSTEM ISOMETRIC

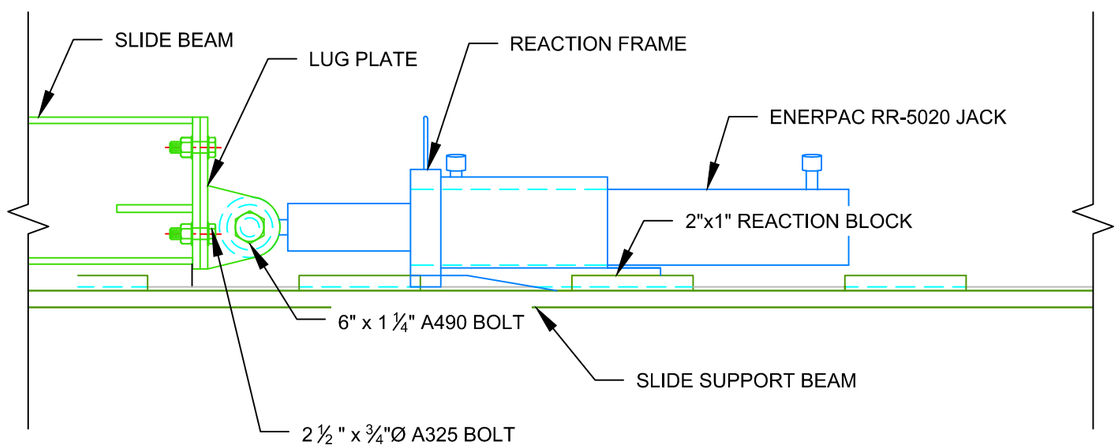

SLIDE SYSTEM ELEVATION

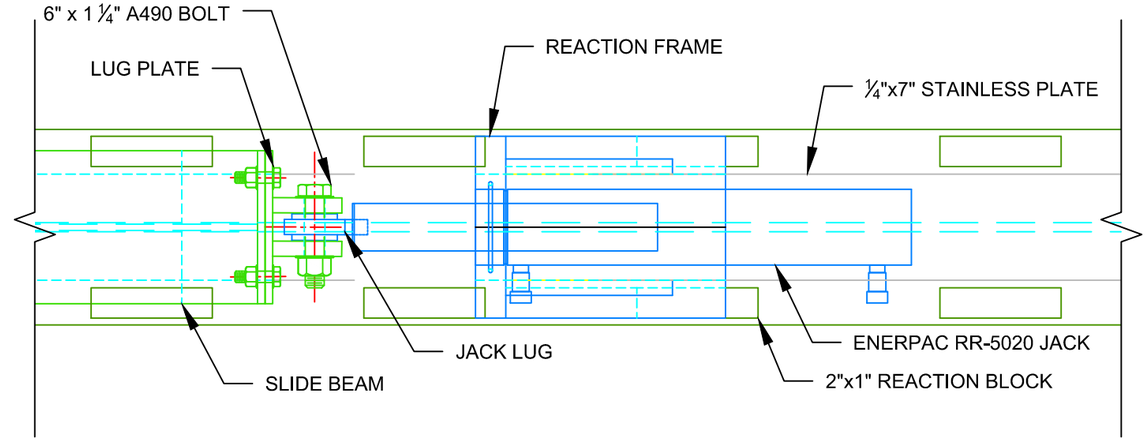

SLIDE SYSTEM PLAN

Revision No. & Date	Vermont Agency of Transportation			Drawing Status		Name	Date	PCL Civil Constructors, Inc. 3810 Northdale Blvd. Suite 200, Tampa Florida 33624 (813)-264-9500 ; Fax: (813)-264-6689	
				Mar 23 2015 9:47 AM	Drawn By	AJT	2/27/15		
	Road No.	County / City	Financial Project ID No.	FOR CONSTRUCTION	Design By	TMD / AJT	2/27/15	Submittal LATERAL SLIDE SYSTEM	PCL Project / Job No. I-91 Hartford / 5514001
	I-91	Windsor / Hartford	IM 091-2(79)		Check By	TMD	03/23/15	Drawing Title JACKING DETAILS	Sheet No. 33

Timothy S Davis
STATE OF VERMONT
TIMOTHY S. DAVIS
NO. 97183
CIVIL
LICENSED
PROFESSIONAL ENGINEER

H:\District Office\Engineering\01 TIG Tampa Active Projects\5514001 - I-91 Hartford\30 Superstructure\38 Floats and Rolls\01 CAD Files\Slide_System_P.dwg 3/23/2015 8:12 AM

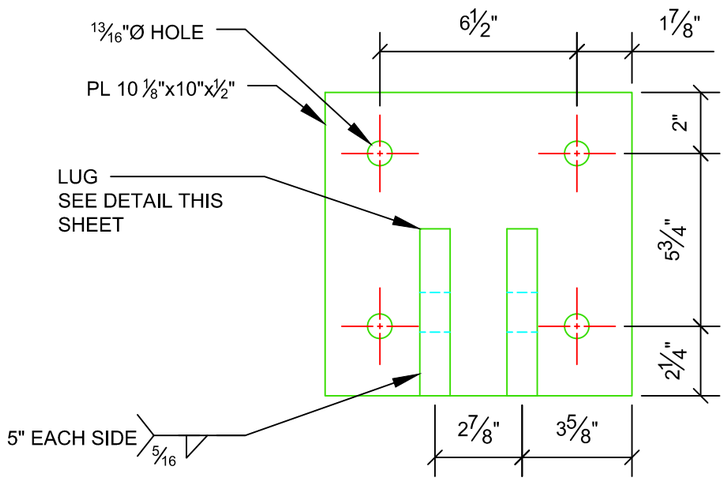

SLIDE BEAM LUG PLATE

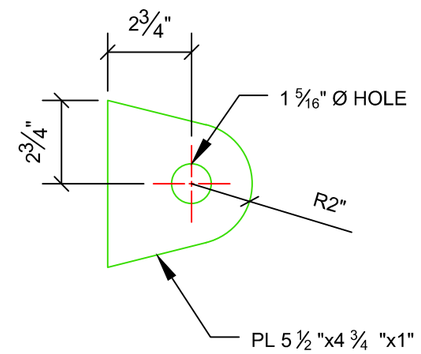

SLIDE BEAM LUG

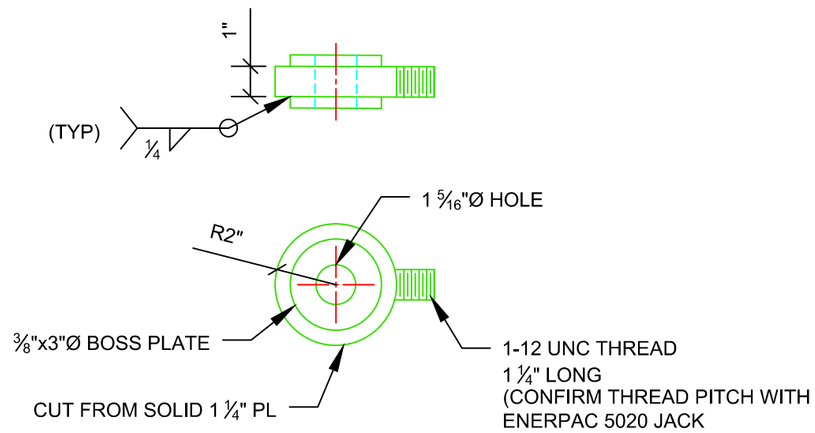

JACK LUG

ELIMINATE BOSS PLATES IF CUT
FROM 1 3/4" PLATE

Revision No. & Date	Vermont Agency of Transportation			Drawing Status		Name	Date	PCL Civil Constructors, Inc. 3810 Northdale Blvd. Suite 200, Tampa Florida 33624 (813)-264-9500 ; Fax: (813)-264-6689	
				Mar 23 2015 9:47 AM	Drawn By	AJT	2/27/15		
	Road No.	County / City	Financial Project ID No.	FOR CONSTRUCTION	Design By	TMD / AJT	2/27/15	Submittal LATERAL SLIDE SYSTEM	PCL Project / Job No. I-91 Hartford / 5514001
	I-91	Windsor / Hartford	IM 091-2(79)		Check By	TMD	03/23/15	Drawing Title JACKING DETAILS (2)	Sheet No. 34

Timothy S. Davis
STATE OF VERMONT
TIMOTHY S. DAVIS
NO. 97183
CIVIL
LICENSED
PROFESSIONAL ENGINEER

H:\District Office\Engineering\01 TIG Tampa Active Projects\5514001 - I-91 Hartford\50 Superstructure\58 Floats and Rolls\01 CAD Files\Slide_System_P.dwg 3/23/2015 8:12 AM

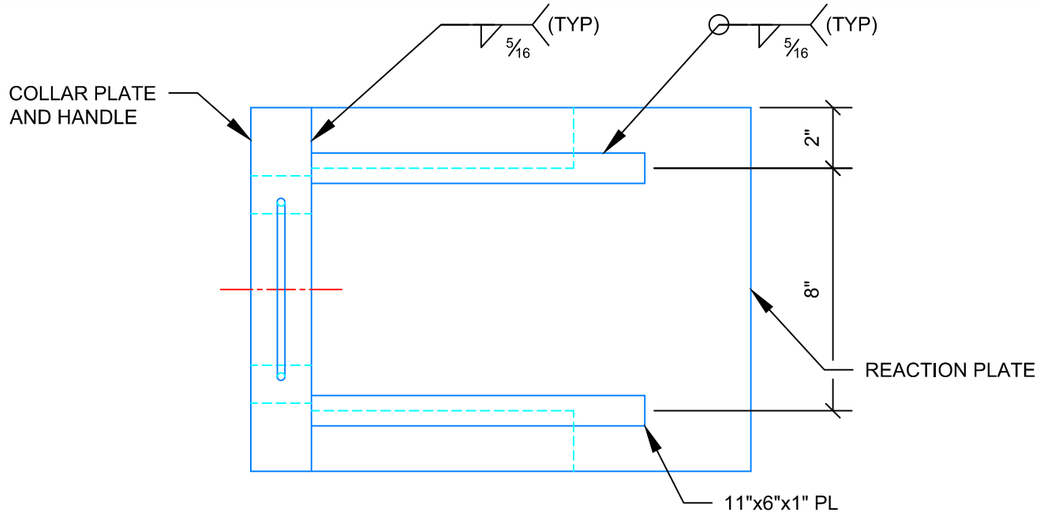

JACK REACTION FRAME - PLAN

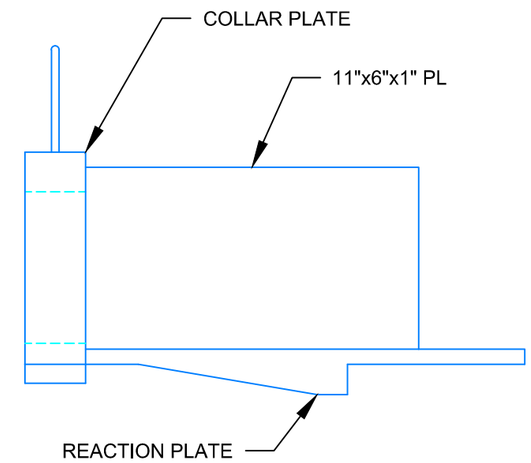

JACK REACTION FRAME - ELEVATION

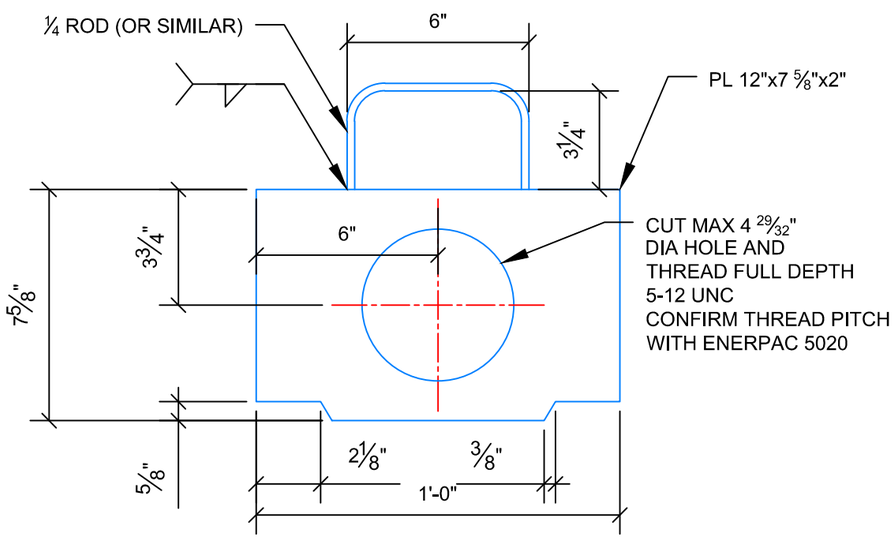

COLLAR PLATE DETAIL

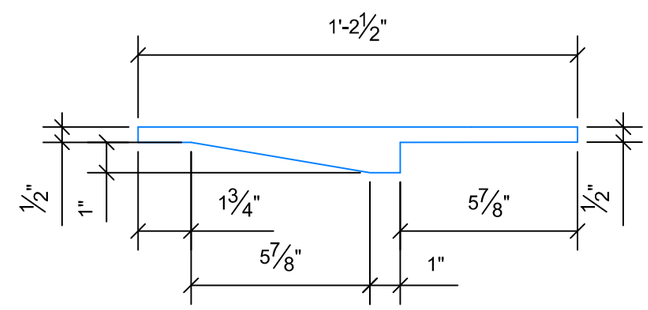

REACTION PLATE ELEVATION

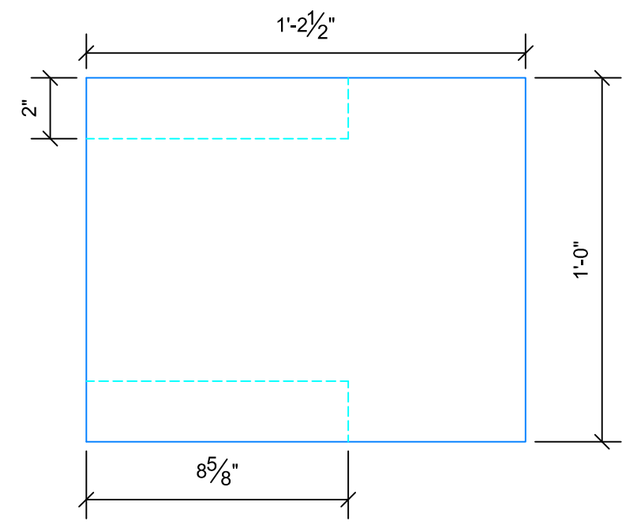

REACTION PLATE PLAN

Revision No. & Date	Vermont Agency of Transportation			Timothy J. Davis	Drawing Status		Name	Date	PCL Civil Constructors, Inc. 3810 Northdale Blvd. Suite 200, Tampa Florida 33624 (813)-264-9500 ; Fax: (813)-264-6689	
				STATE OF VERMONT TIMOTHY DAVIS NO. 97183 CIVIL LICENSED PROFESSIONAL ENGINEER	Mar 23 2015 9:47 AM	Drawn By	AJT	2/27/15		
	Road No.	County / City	Financial Project ID No.		FOR CONSTRUCTION	Design By	TMD / AJT	2/27/15	Submittal LATERAL SLIDE SYSTEM	PCL Project / Job No. I-91 Hartford / 5514001
	I-91	Windsor / Hartford	IM 091-2(79)			Check By	TMD	03/23/15	Drawing Title JACKING DETAILS (3)	Sheet No. 35

N:\District Office\Engineering\01 TR\ Tampa Active Projects\5514001 - I-91 Hartford\05 Superstructure\08 Floats and Rolls\01 CAD Files\Slide_System_P.dwg 3/23/2015 9:13 AM

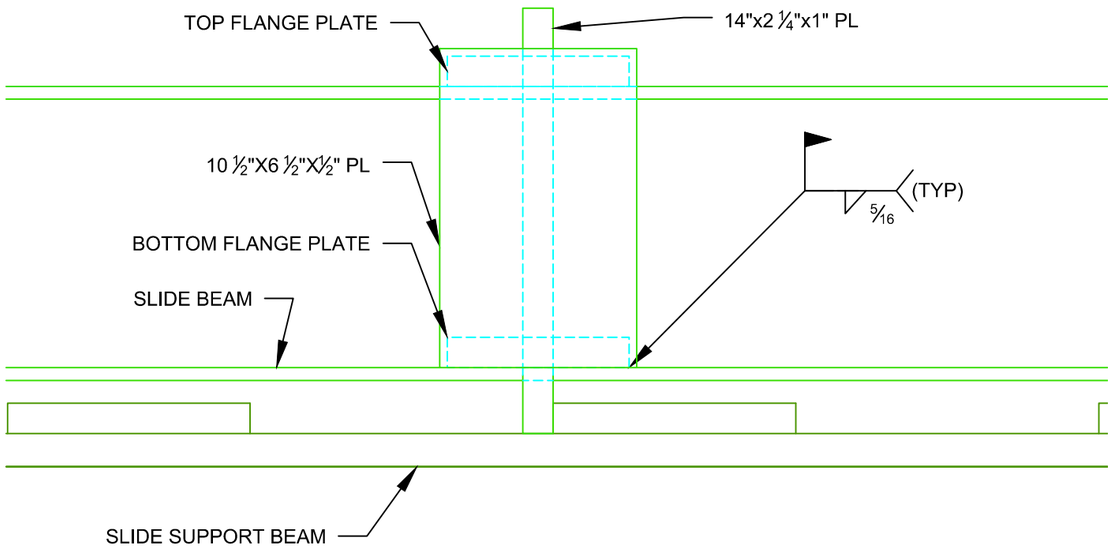

SLIDE BEAM STOP - ELEVATION

FIELD LOCATED AFTER INSTALLATION OF SLIDE BEAM
2 EA LOCATIONS REQUIRED PER ABUTMENT

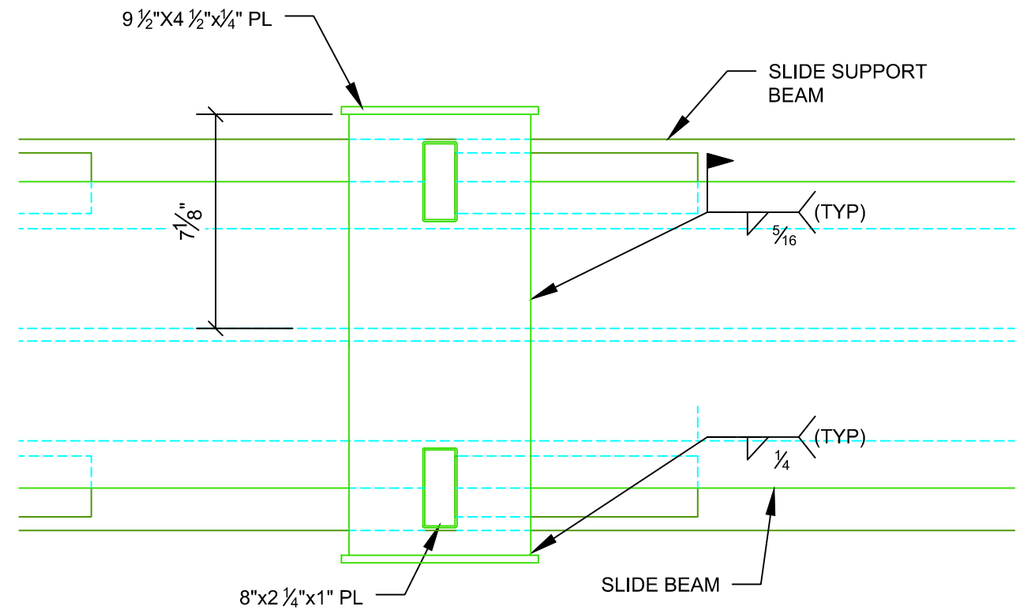

SLIDE BEAM STOP - PLAN

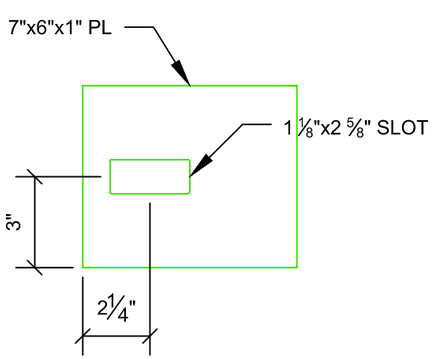

BOTTOM FLANGE PLATE

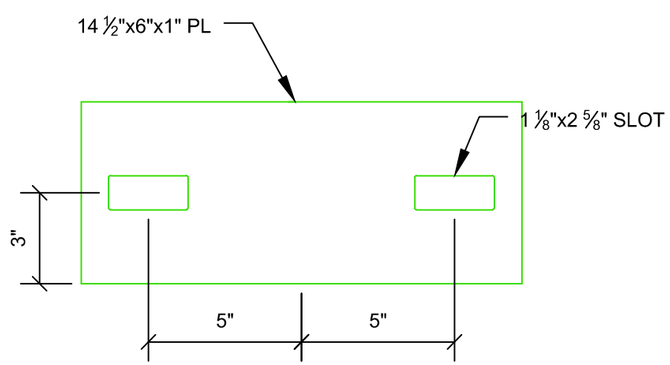

TOP FLANGE PLATE

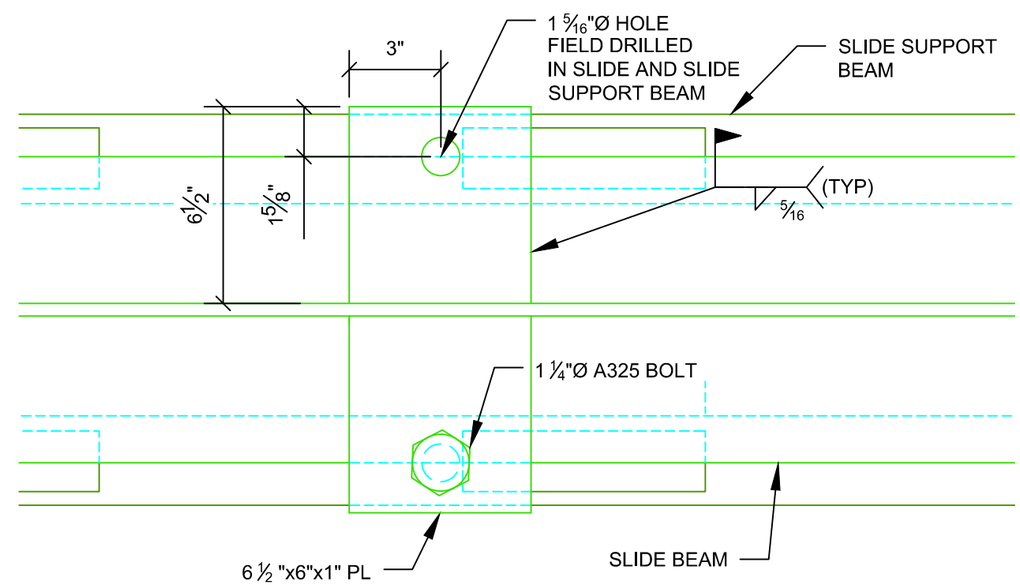

SLIDE BEAM STOP (BOLTED OPTION) - PLAN

Revision No. & Date	Vermont Agency of Transportation			Drawing Status		Name	Date	PCL Civil Constructors, Inc. 3810 Northdale Blvd. Suite 200, Tampa Florida 33624 (813)-264-9500 ; Fax: (813)-264-6689	
				Mar 23 2015 9:47 AM	Drawn By	AJT	2/27/15		
	Road No.	County / City	Financial Project ID No.	FOR CONSTRUCTION	Design By	TMD / AJT	2/27/15	Submittal LATERAL SLIDE SYSTEM	PCL Project / Job No. I-91 Hartford / 5514001
	I-91	Windsor / Hartford	IM 091-2(79)		Check By	TMD	03/23/15	Drawing Title JACKING DETAILS (4)	Sheet No. 36

STATE OF VERMONT
TIMOTHY S. DAVIS
NO. 97183
CIVIL
LICENSED
PROFESSIONAL ENGINEER

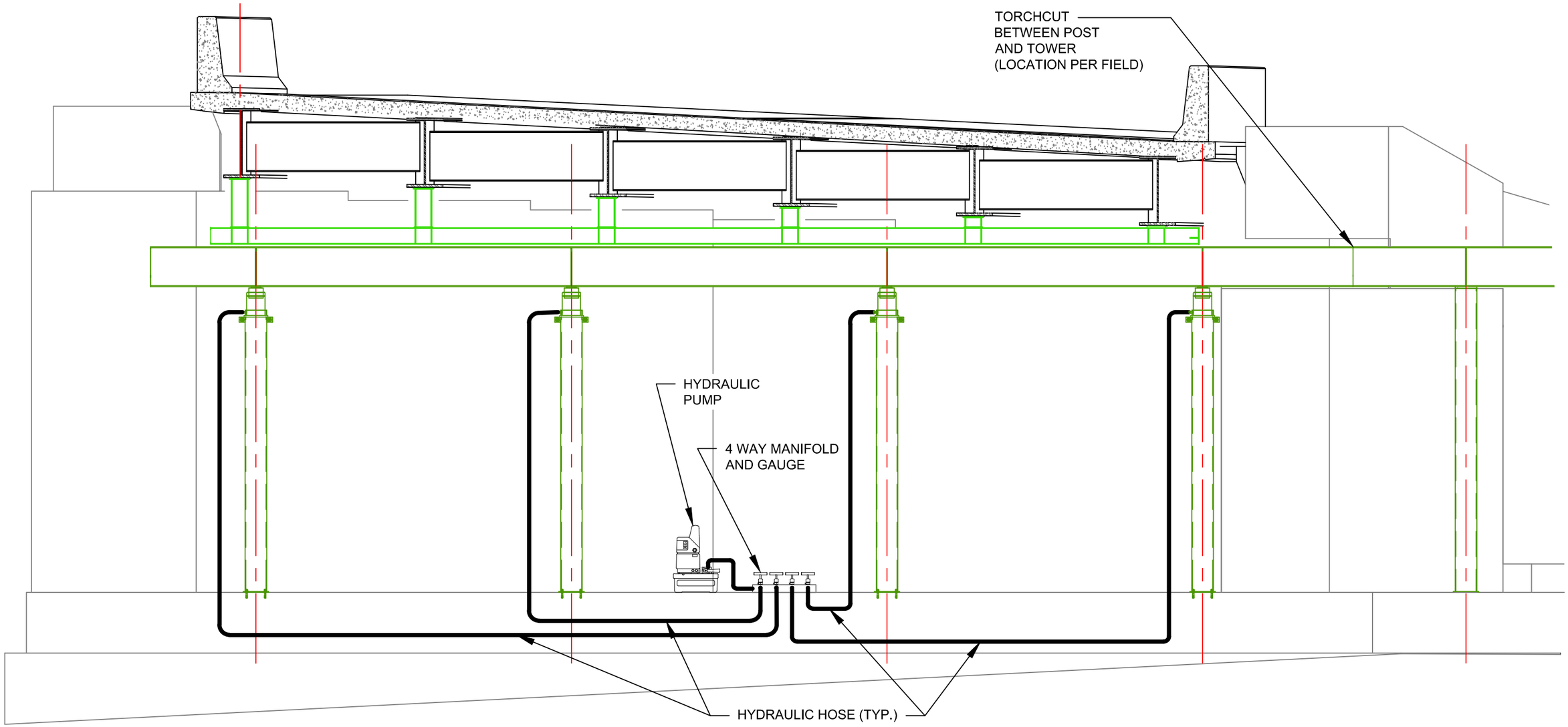

LOWERING SYSTEM HYDRAULIC SCHEMATIC

ABUTMENT 4 SHOWN, OTHERS SIMILAR

Revision No. & Date	Vermont Agency of Transportation			Engineer's Seal	Drawing Status		Name	Date	PCL Civil Constructors, Inc. 3810 Northdale Blvd. Suite 200, Tampa Florida 33624 (813)-264-9500 ; Fax: (813)-264-6689	
				STATE OF VERMONT TIMOTHY DAVIS NO. 97183 CIVIL LICENSED PROFESSIONAL ENGINEER	Mar 23 2015 9:47 AM	Drawn By	AJT	2/27/15		
	Road No.	County / City	Financial Project ID No.		FOR CONSTRUCTION	Design By	TMD / AJT	2/27/15	Submittal LATERAL SLIDE SYSTEM	PCL Project / Job No. I-91 Hartford / 5514001
	I-91	Windsor / Hartford	IM 091-2(79)			Check By	TMD	03/23/15	Drawing Title LOWERING DETAILS	Sheet No. 37

N:\District Office\Engineering\01 TIG Tampa Active Projects\5514001 - I-91 Hartford\50 Superstructure\58 Floats and Rods\01 CAD Files\Slide_System_P.dwg 3/23/2015 8:13 AM

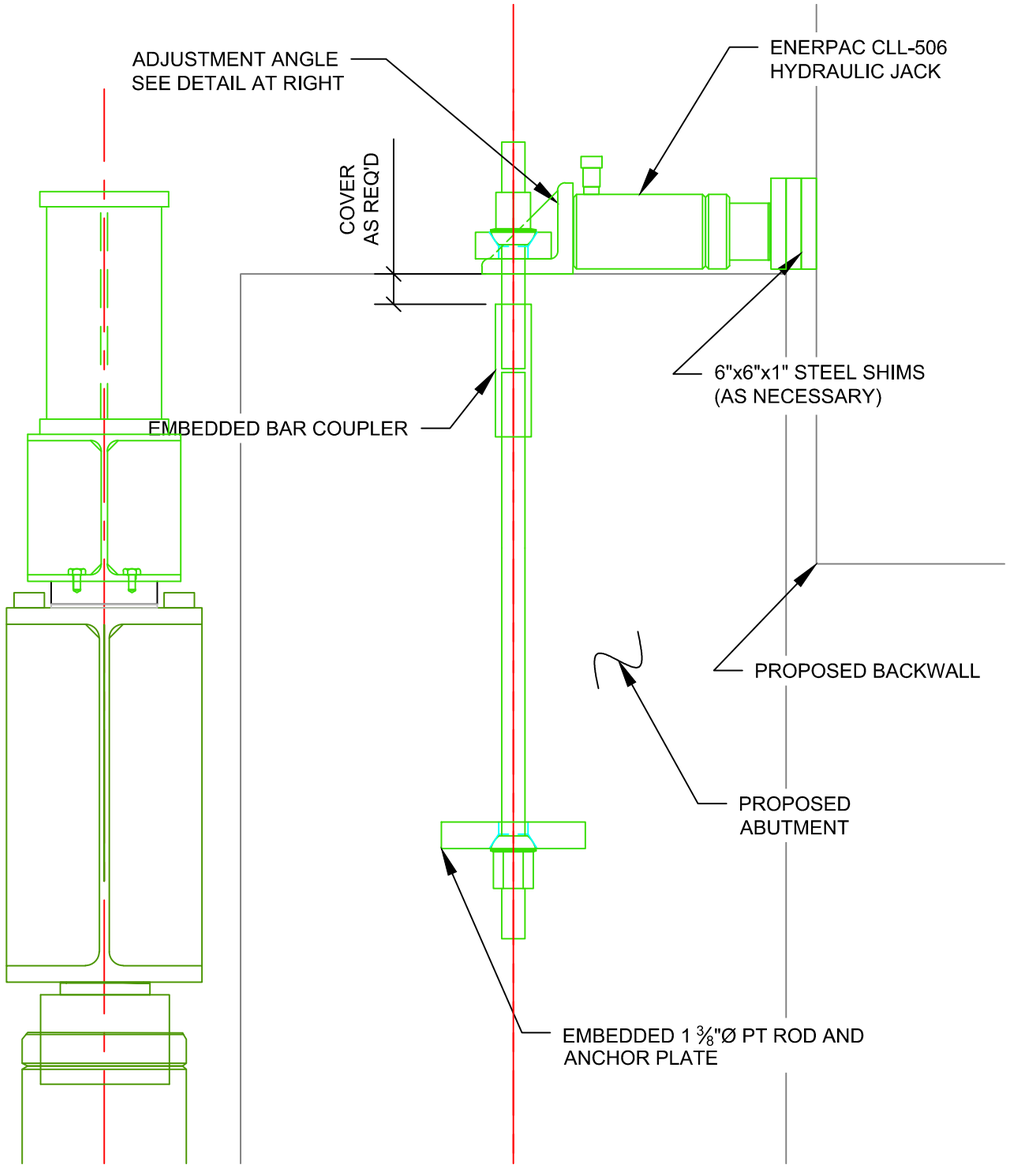

UP/DOWN STATION ADJUSTMENT

EMBEDDED PT LOCATIONS TO BE PROVIDED IN DEMOLITION PLAN

STRESS BAR TO 110 KIPS BEFORE JACKING

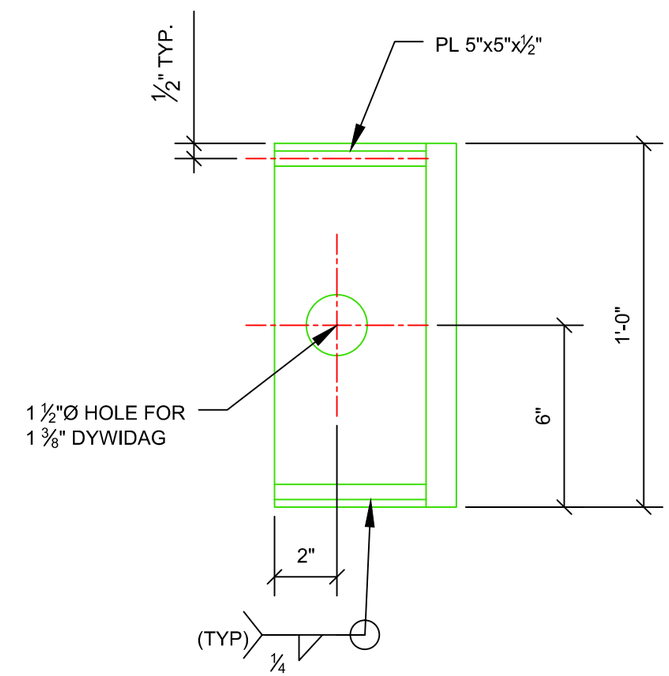

ADJUSTMENT ANGLE

3 EA REQUIRED

Revision No. & Date	Vermont Agency of Transportation			Drawing Status		Name	Date	PCL Civil Constructors, Inc. 3810 Northdale Blvd. Suite 200, Tampa Florida 33624 (813)-264-9500 ; Fax: (813)-264-6689	
				Mar 23 2015 9:47 AM	Drawn By	AJT	2/27/15		
	Road No.	County / City	Financial Project ID No.	FOR CONSTRUCTION	Design By	TMD / AJT	2/27/15	Submittal LATERAL SLIDE SYSTEM	PCL Project / Job No. I-91 Hartford / 5514001
	I-91	Windsor / Hartford	IM 091-2(79)		Check By	TMD	03/23/15	Drawing Title LONGITUDINAL ADJUSTMENT	Sheet No. 38

STATE OF VERMONT
TIMOTHY DAVIS
NO. 97183
CIVIL
LICENSED
PROFESSIONAL ENGINEER

Hartford Lateral Slide
I-91 over US-5

TODAY'S DATE: _____
Job NO: 5515002 .

FALSEWORK CHECKLIST

BRIDGE: _____

REMARKS: _____
_____
_____

ITEM	INSPECTED BY							
	FOREMAN	DATE	FOREMAN	DATE	FIELD ENGINEER	DATE	PROJECT ENGINEER	DATE
GENERAL								
ALL MEMBERS HAVE BEEN INSPECTED FOR CONFORMANCE								
FOOTING								
FOOTING IS STABLE								
NO SIGNIFICANT VOIDS EXIST UNDER CRANE MATS								
FOOTING BEAMS ARE LEVEL								
WHERE REQUIRED, SHIMS ARE SECURELY INSTALLED								
SHORING TOWER (INCLUDING HEADER BEAMS)								
ALL TOWERS ARE PROPERLY WELDED TO FOOTING BEAMS								
SHORING TOWERS ARE PROPERLY ASSEMBLED (ALL BOLTS/PINS)								
TOP AND BOTTOM SCREW JACKS DON'T EXCEDE MAX STROKE (1'-4")								
SHORING TOWERS ARE PLUMB								
ALL TOWERS ARE PROPERLY WELDED TO HEADER BEAMS								
TOP BEAM IS PROPERLY WELDED TO HEADER BEAM								
PIPE SHORING								
PIPE IS SECURELY WELDED TO FOOTING BEAM (WHERE REQ'D)								
PIPE IS SECURED TO CONCRETE WITH (4) ANCHORS (WHERE REQ'D)								
PIPE IS SECURED TO ABUTMENT WITH (2) ANCHORS (WHERE REQ'D)								
PIPES ARE PLUMB								
CORRECT JACKS ARE USED ABOVE PIPES (CLL-2006)								
JACKS ARE SECURED IN RESTRAINERS								

SLIDE SYSTEM								
POUR BEAM IS PROPERLY WELDED TO TOP BEAM								
SLIDE SUPPORT BEAM IS PROPERLY WELDED TO TOP BEAM								
CORRECT JACKS ARE USED ABOVE POUR BEAM (CLL-2506, CLL-2002 WHERE SPECIFIED)								
SLIDE SUPPORT BEAM IS LEVEL FOR ABUTMENTS 3 & 4								
SLIDE BEAM IS INSTALLED AND SECURED								
PTFE PADS ARE INSTALLED & SECURED WITH (6) SCREWS								

FALSEWORK SYTSEM INSEPECTED AS PER ABOVE CHECKLIST

FOREMAN #1	DATE	TIME
FOREMAN #2	DATE	TIME
FIELD ENGINEER #1	DATE	TIME
PROJECT ENGINEER	DATE	TIME
SUPERINTENDENT	DATE	TIME
PROJECT MANAGER	DATE	TIME
DISTRICT ENGINEER	DATE	TIME

Hartford Lateral Slide
I-91 over US-5

TODAY'S DATE: _____
Job NO: 5515002 .

PRE-SLIDE CHECKLIST

BRIDGE: _____

REMARKS: _____
_____
_____

ITEM	INSPECTED BY							
	FOREMAN	DATE	FOREMAN	DATE	FIELD ENGINEER	DATE	PROJECT ENGINEER	DATE
PRIOR TO SLIDING SUPERSTRUCTURE								
FALSEWORK INSPECTED AND SIGNED OFF ON								
BEARING ANCHOR BOLTS ARE GROUTED IN								
ELASTOMERIC BEARINGS ARE IN POSITION								
BEARING RESTRAINERS ARE NOT INSTALLED								
GIRDERS ARE PROPERLY SECURED TO SLIDE BEAM								
TRIAL SLIDE COMPLETE								
REFERENCE POINTS ARE CLEARLY MARKED ON SLIDE SUPPORT BEAMS								
SLIDE BEAM STOP IS INSTALLED								
JACKS ARE SECURELY FASTENED TO REACTION FRAME								
JACKS ARE SECURELY FASTENED TO THE SLIDE BEAM								
BACKUP JACKS ARE ON SITE AND IN GENERAL VISCINITY OF WORK								
BACKUP PUMPS ARE ON SITE AND IN GENERAL VISCINITY OF WORK								
PT BARS/JACKS FOR LONGITUDINAL ADJUSTMENT IN PLACE								
PUMPS & JACKS FOR LOWERING OF FALSEWORK PLACE								
SLIDE SURFACE IS CLEAN AND FREE OF DEBRIS								
ALL EQUIPMENT HAS BEEN INSPECTED								

SLIDE SYSTEM INSPECTED AS PER ABOVE CHECKLIST

FOREMAN #1	DATE	TIME
FOREMAN #2	DATE	TIME
FIELD ENGINEER #1	DATE	TIME
PROJECT ENGINEER	DATE	TIME
SUPERINTENDENT	DATE	TIME
PROJECT MANAGER	DATE	TIME
DISTRICT ENGINEER	DATE	TIME

Hartford Lateral Slide
I-91 over US-5

TODAY'S DATE: _____
Job NO: 5515002 .

POST-SLIDE CHECKLIST

BRIDGE: _____

REMARKS: _____
_____
_____

ITEM	INSPECTED BY							
	FOREMAN	DATE	FOREMAN	DATE	FIELD ENGINEER	DATE	PROJECT ENGINEER	DATE
PRIOR TO LOWERING SUPERSTRUCTRE								
ALL BEARING RESTRAINERS ARE INSTALLED & SECURED								
GIRDERS ARE CENTERED OVER ELASTOMERIC BEARINGS								
ALL EQUIPMENT HAS BEEN INSPECTED								
AFTER LOWERING OF SUPERSTRUCTURE & PRIOR TO WELDING GIRDERS TO BEARINGS								
SUPERSTRUCTURE IS IN THE CORRECT LOCATION (SURVEY)								
GIRDERS ARE CENTERED OVER ELASTOMERIC BEARINGS								
JACKS ARE COMPLETELY FREE OF GIRDERS								
FINAL INSPECTION - AFTER WELDING GIRDERS TO BEARINGS								
ALL GIRDERS ARE PROPERLY WELDED TO BEARINGS								

SLIDE SYSTEM INSPECTED AS PER ABOVE CHECKLIST

FOREMAN #1	DATE	TIME
FOREMAN #2	DATE	TIME
FIELD ENGINEER #1	DATE	TIME
PROJECT ENGINEER	DATE	TIME
SUPERINTENDENT	DATE	TIME
PROJECT MANAGER	DATE	TIME
DISTRICT ENGINEER	DATE	TIME