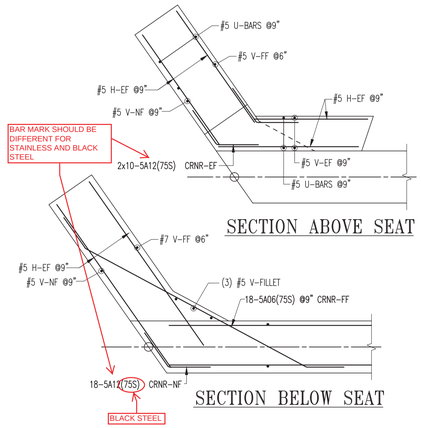

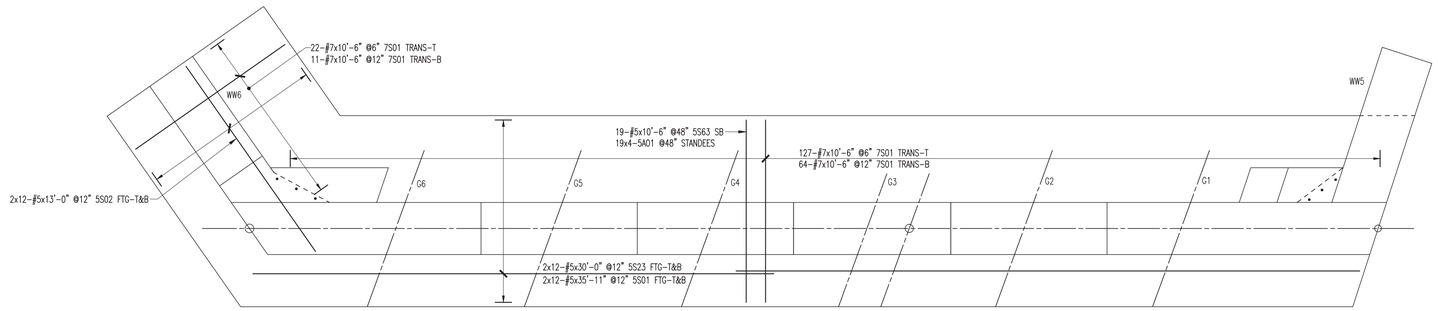

ABUTMENT 3 FOOTING REINFORCEMENT

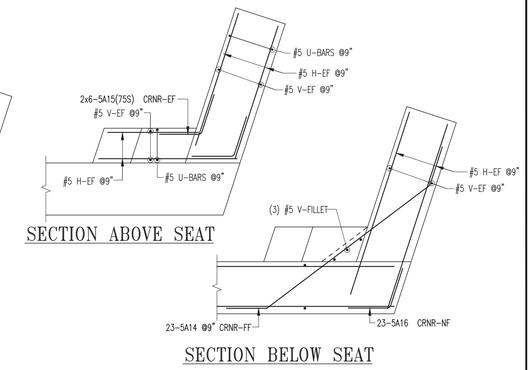

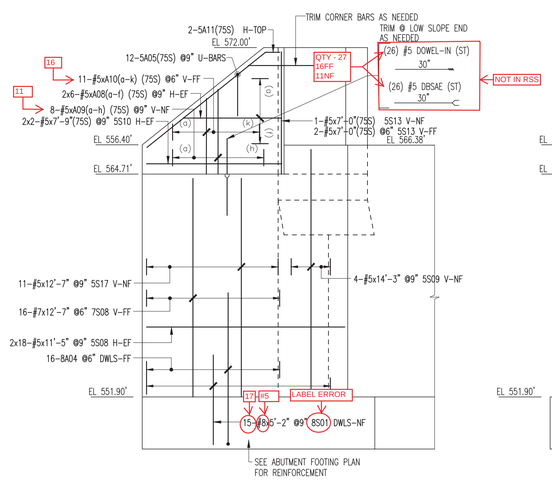

WINGWALL 6 (WW6) ELEVATION

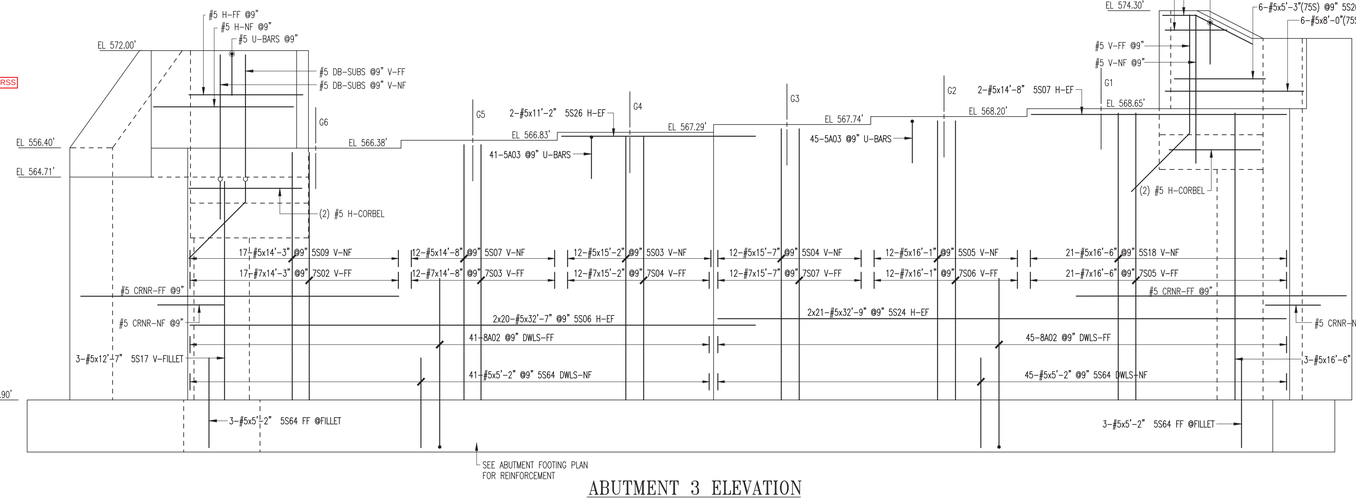

ABUTMENT 3 ELEVATION

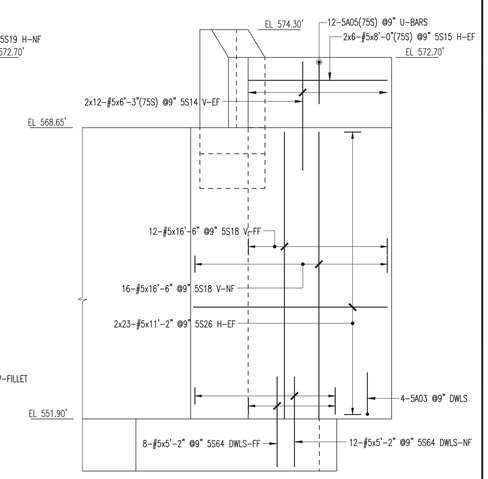

WINGWALL 5 (WW5) ELEVATION

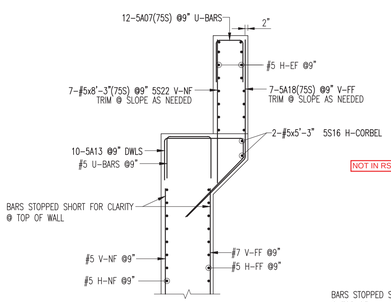

CHEEKWALL @ (WW5) SECTION

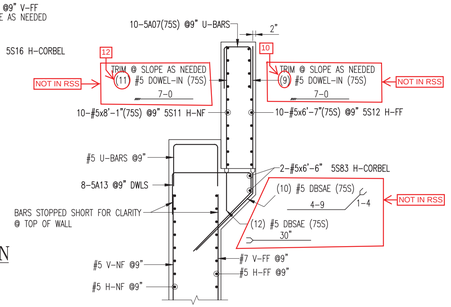

CHEEKWALL @ (WW6) SECTION

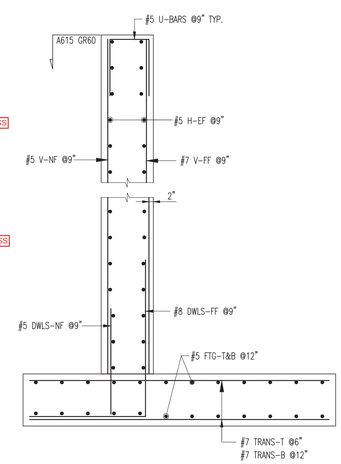

ABUTMENT 3 WALL REINF. SECTION

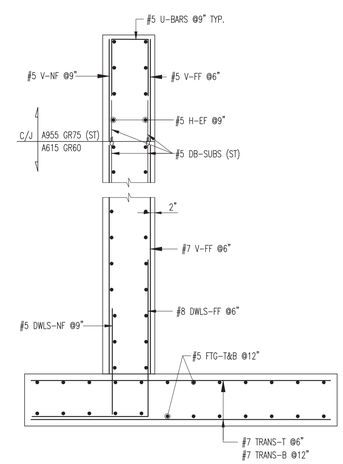

WINGWALL 6 REINF. SECTION

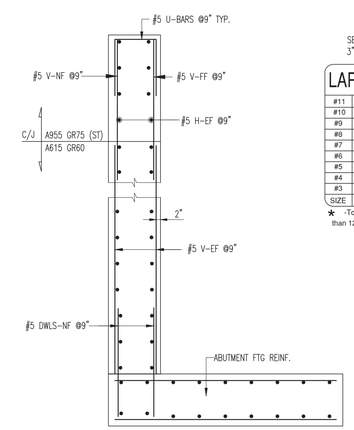

WINGWALL 5 REINF. SECTION

SEE SHEET R06S FOR BAR LISTS
3" CLR COVER U.N.O.

LAP CHART-U.N.O.

SIZE	TOP BARS ★	OTHER BARS
#11		
#10		
#9		
#8	54"	54"
#7	41"	41"
#6	31"	31"
#5	26"	26"
#4		
#3		

★ -Top bars are horiz. bars with more than 12" of concrete cast below the bars.

AASHTO M 31 for all black bar (typical all sheets where applicable).

ALL MATERIAL ON THIS DRAWING SHALL BE ASTM A615 GRADE 60 U.N.O.

ALL MATERIAL ON THIS DRAWING NOTED AS (75S) SHALL BE ASTM "2304" GR75 STAINLESS STEEL

All material specified as stainless steel shall be ASTM A 955 Solid Stainless Reinforcing Steel in accordance with Subsection 713.01(f). (Typ all sheets where applicable)

Vermont Agency of Transportation
RECEIVED
CK'D BY RK/GL OK'D BY WL
February 19, 2015
RESUBMIT YES Rejected
BY KH DATE 3-5-2015

No.	Description	Date	By
1	APPROVAL PRINT	02/18/15	CPS

Revisions and Issue Record

The full intent and purpose of this drawing is the placing of reinforcing steel bars ONLY. It is NOT to be used as a means of communication between the Architect, Engineer, Contractor or any other Sub-trades.

THIS DRAWING IS NOT TO BE SCALED.

Harris Rebar Barker Steel — National Strength. Local Service.

DETAILED AT:
CANAAN
NEW HAMPSHIRE

Project: HARTFORD LATERAL BRIDGE
I-91 NORTHBOUND

Drawing: ABUTMENT 3 W/ WINGWALLS 5&6 REINFORCEMENT

Customer: PCL CIVIL CONSTRUCTORS

Engineer: G. LAROCHE

Refer to Release:

Date	Drawn	Chkd.	JOB No.	Dwg. No.
02/10/15	CPS		33505535	R01N

W:\csample\Projects\33505535\Placing Drawings\DWGs\R01N.dwg

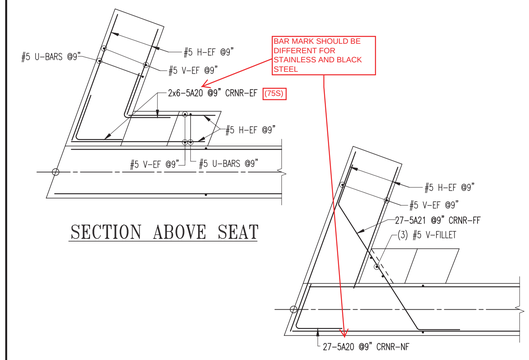

SECTION ABOVE SEAT

SECTION BELOW SEAT

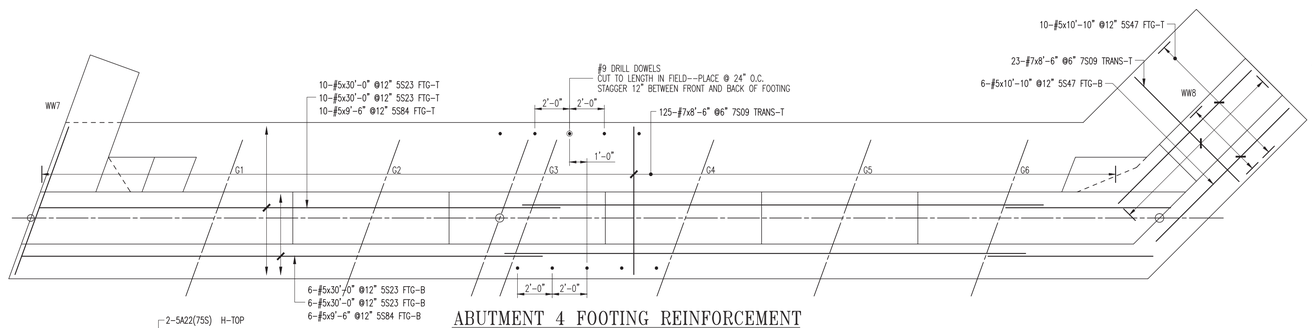

ABUTMENT 4 FOOTING REINFORCEMENT

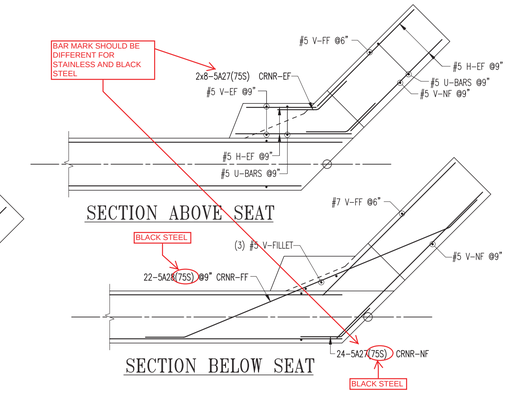

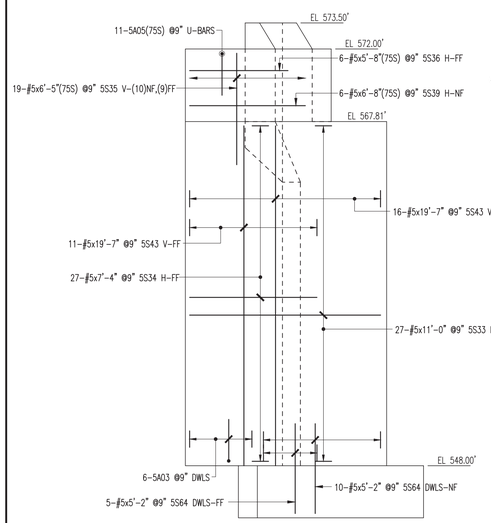

WINGWALL 7 (WW7) ELEVATION

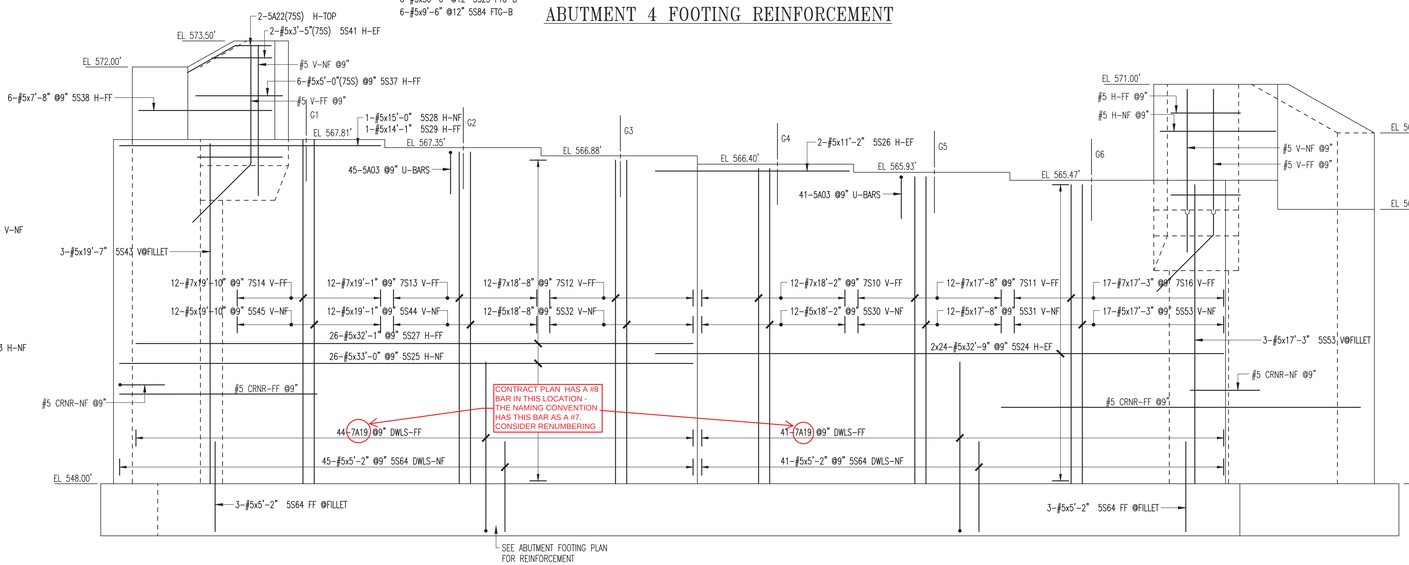

ABUTMENT 4 ELEVATION

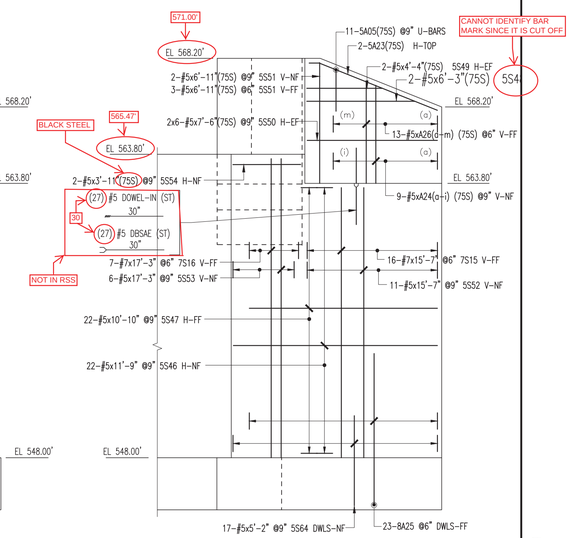

WINGWALL 8 (WW8) ELEVATION

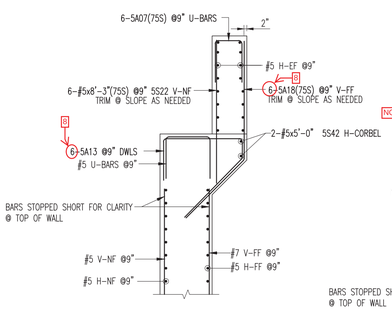

CHEEKWALL @ (WW7) SECTION

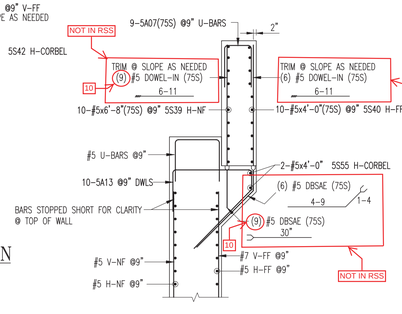

CHEEKWALL @ (WW8) SECTION

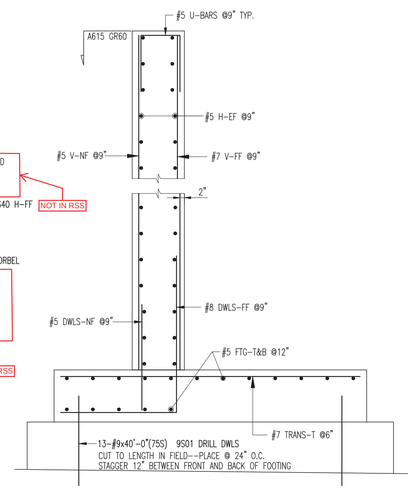

ABUTMENT 4 WALL REINF. SECTION

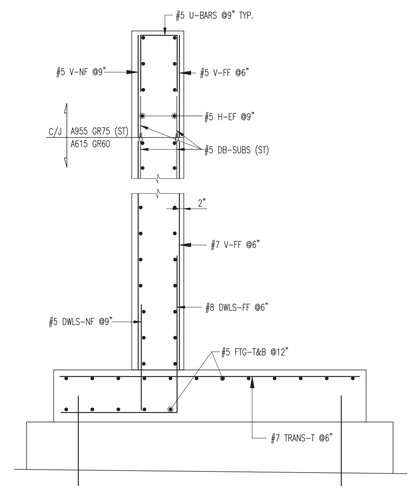

WINGWALL 8 REINF. SECTION

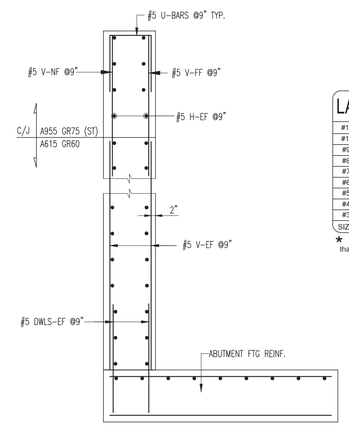

WINGWALL 7 REINF. SECTION

SEE SHEET R06S FOR BAR LISTS
3" CLR COVER U.N.O.

LAP CHART-U.N.O.

SIZE	TOP BARS ★	OTHER BARS
#11		
#10		
#9		
#8	54"	54"
#7	41"	41"
#6	31"	31"
#5	26"	26"
#4		
#3		

★ -Top bars are horiz. bars with more than 12" of concrete cast below the bars.

ALL MATERIAL ON THIS DRAWING SHALL BE ASTM A615 GRADE 60 U.N.O.

ALL MATERIAL ON THIS DRAWING NOTED AS (75S) SHALL BE ASTM "2304" GR75 STAINLESS STEEL

Vermont Agency of Transportation
RECEIVED
CK'D BY RK/GL OK'D BY WL
February 19, 2015
RESUBMIT YES Rejected
BY KH DATE 3-5-2015

No.	Description	Date	By
1	APPROVAL PRINT	02/18/15	CPS

Revisions and Issue Record

The full intent and purpose of this drawing is the placing of reinforcing steel bars ONLY. It is NOT to be used as a means of communication between the Architect, Engineer, Contractor or any other Sub-trades.

THIS DRAWING IS NOT TO BE SCALED.

HarrisRebar Barker Steel — National Strength. Local Service.

DETAILED AT:
CANAAN
NEW HAMPSHIRE

Project: HARTFORD LATERAL BRIDGE
I-91 NORTHBOUND

Drawing: ABUTMENT 4 W/ WINGWALLS 7&8 REINFORCEMENT

Customer: PCL CIVIL CONSTRUCTORS

Engineer: G. LAROCHE

Refer to Release:

Date	Drawn	Chkd.	JOB No.	Dwg. No.
02/10/15	CPS		33505535	R02N

W:\csample\Projects\33505535\Placing Drawings\DWGs\R01N.dwg

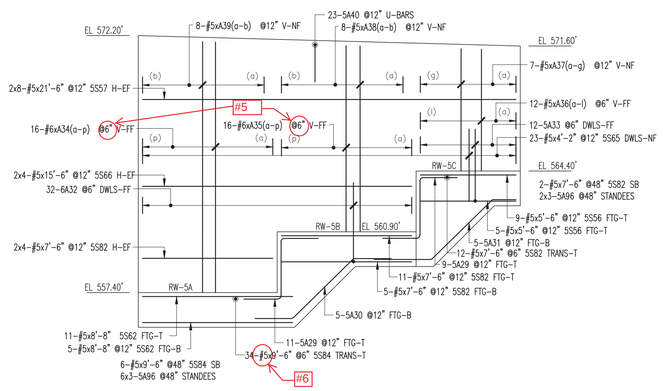

RETAINING WALL 5 (RW5) ELEVATION

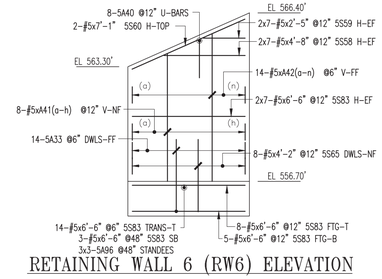

RETAINING WALL 6 (RW6) ELEVATION

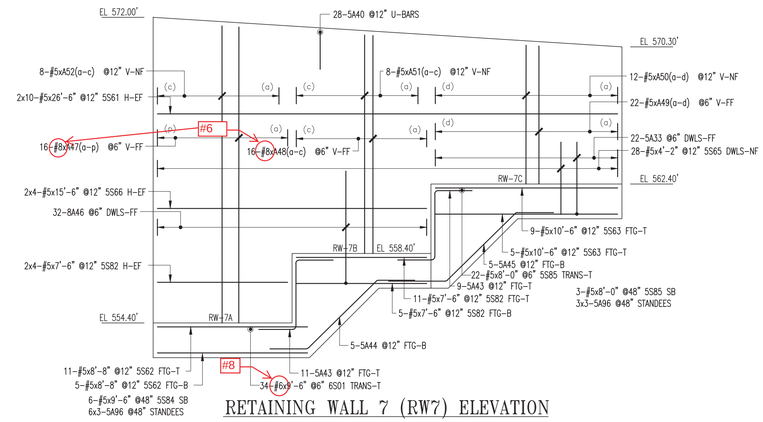

RETAINING WALL 7 (RW7) ELEVATION

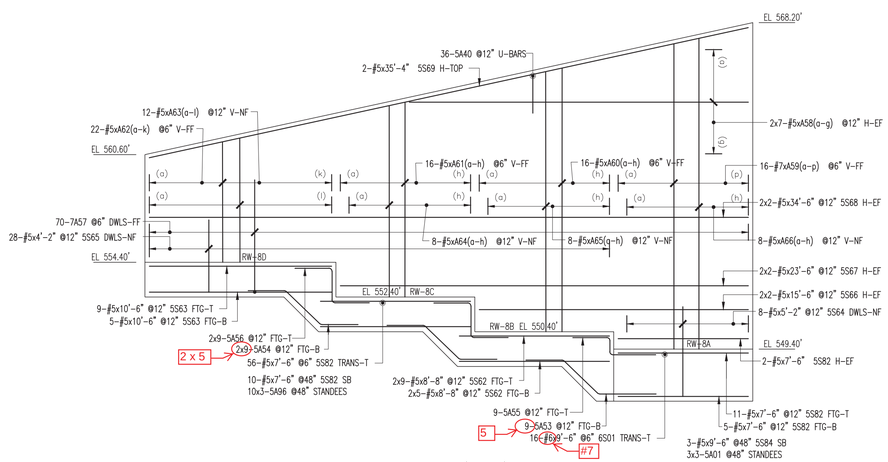

RETAINING WALL 8 (RW8) ELEVATION

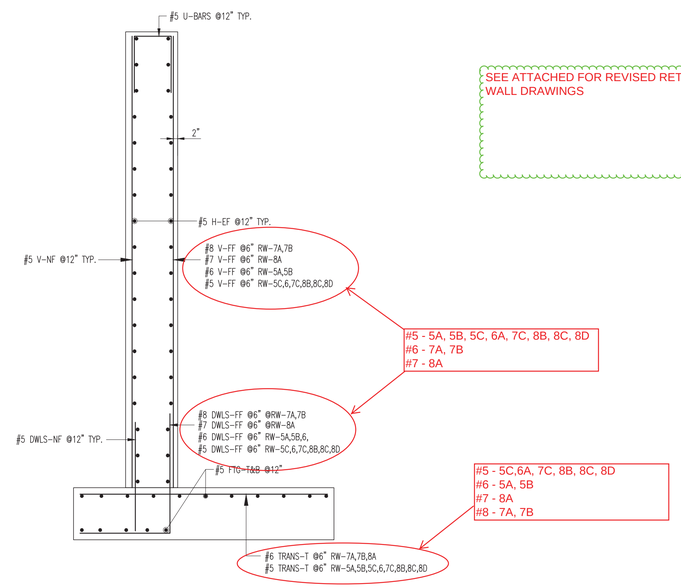

TYYPICAL RETAINING WALL REINFORCEMENT SECTION

SEE ATTACHED FOR REVISED RETAINING WALL DRAWINGS

SEE SHEET R06S FOR BAR LISTS
3" CLR COVER U.N.O.

LAP CHART-U.N.O.

SIZE	TOP BARS ★	OTHER BARS
#11		
#10		
#9		
#8	54"	54"
#7	41"	41"
#6	31"	31"
#5	26"	26"
#4		
#3		

★ -Top bars are horiz. bars with more than 12" of concrete cast below the bars.

Vermont Agency of Transportation
RECEIVED
CK'D BY RK/GL OK'D BY WL
February 19, 2015
RESUBMIT YES Rejected
BY KH DATE 3-5-2015

ALL MATERIAL ON THIS DRAWING SHALL BE ASTM A615 GRADE 60 U.N.O.

No.	Description	Date	By
1	APPROVAL PRINT	02/18/15	CPS

Revisions and Issue Record

The full intent and purpose of this drawing is the placing of reinforcing steel bars ONLY. It is NOT to be used as a means of communication between the Architect, Engineer, Contractor or any other Sub-trades.

THIS DRAWING IS NOT TO BE SCALED.

HarrisRebar Barker Steel
National Strength. Local Service.

DETAILED AT:
CANAAN
NEW HAMPSHIRE

Project: HARTFORD LATERAL BRIDGE
I-91 NORTHBOUND

Drawing: RETAINING WALLS
5-8 REINFORCEMENT

Customer: PCL CIVIL CONSTRUCTORS

Engineer: G. LAROCHE

Refer to Release:

Date	Drawn	Chkd.	JOB No.	Dwg. No.
02/10/15	CPS		33505535	R03N

W:\csample\Projects\33505535\Placing Drawings\DWGs\R01N.dwg

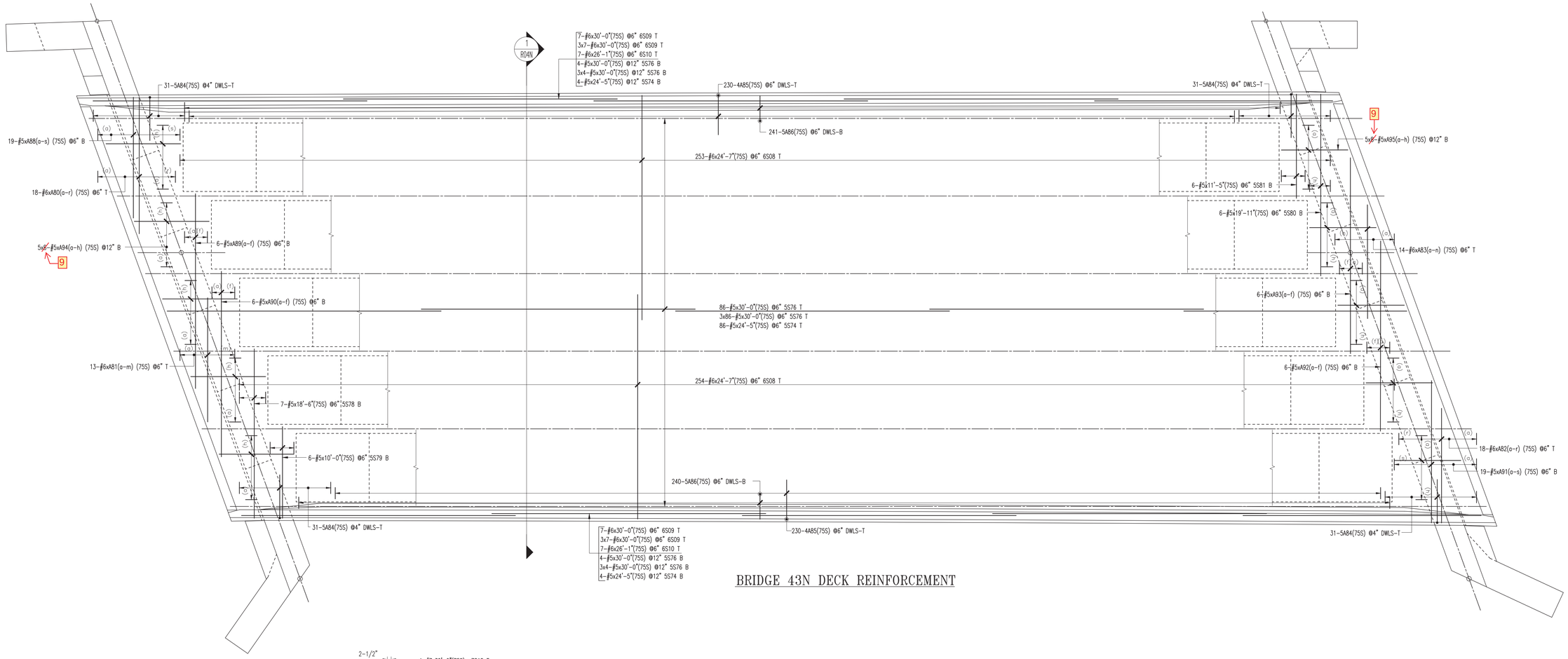

BRIDGE 43N DECK REINFORCEMENT

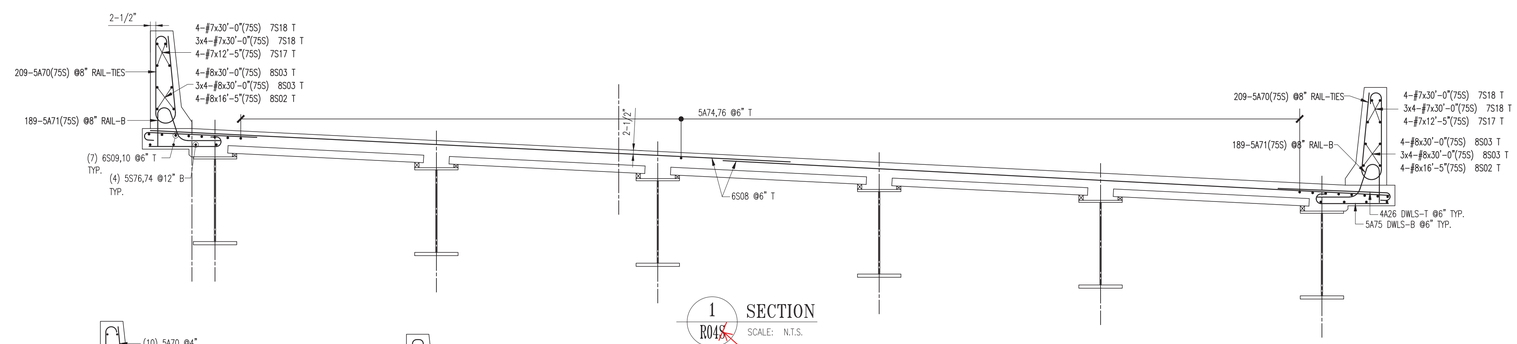

1 R04S SECTION
SCALE: N.T.S.

N

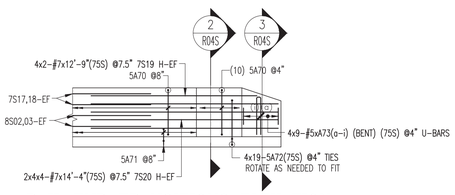

RAIL END TRANSITIONS ELEVATION

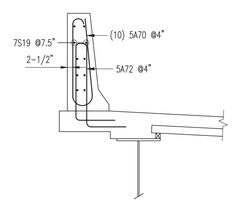

2 R04S SECTION
SCALE: N.T.S.

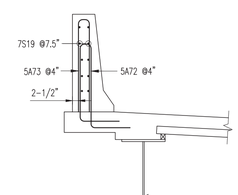

3 R04S SECTION
SCALE: N.T.S.

All material on this drawing shall be ASTM A 955 Solid Stainless Reinforcing Steel in accordance with Subsection 713.01(f).

LAP CHART-U.N.O.

#11		
#10		
#9		
#8	55"	55"
#7	43"	43"
#6	31"	31"
#5	26"	26"
#4		
#3		
SIZE	TOP BARS ★	OTHER BARS

★ -Top bars are horiz. bars with more than 12" of concrete cast below the bars.

SEE SHEET R06S FOR BAR LISTS
3" CLR COVER U.N.O.

ALL MATERIAL ON THIS DRAWING NOTED AS (75S) SHALL BE ASTM "2304" GR75 STAINLESS STEEL

Vermont Agency of Transportation
RECEIVED
CK'D BY RK/GL OK'D BY WL
February 19, 2015
RESUBMIT YES Rejected
BY KH DATE 3-5-2015

No.	Description	Date	By
1	APPROVAL PRINT	02/18/15	CPS

Revisions and Issue Record

The full intent and purpose of this drawing is the placing of reinforcing steel bars ONLY. It is NOT to be used as a means of communication between the Architect, Engineer, Contractor or any other Sub-trades.

THIS DRAWING IS NOT TO BE SCALED.

HarrisRebar Harker Steel
National Strength. Local Service.

DETAILED AT:
CANAAN
NEW HAMPSHIRE

Project: HARTFORD LATERAL BRIDGE
I-91 NORTHBOUND

Drawing: DECK AND RAILS
REINFORCEMENT

Customer: PCL CIVIL CONSTRUCTORS

Engineer: G. LAROCHE

Refer to Release:

Date	Drawn	Chkd.	JOB No.	Dwg. No.
02/10/15	CPS		33505535	R04N

W:\csample\Projects\33505535\Placing Drawings\DWGs\R01N.dwg

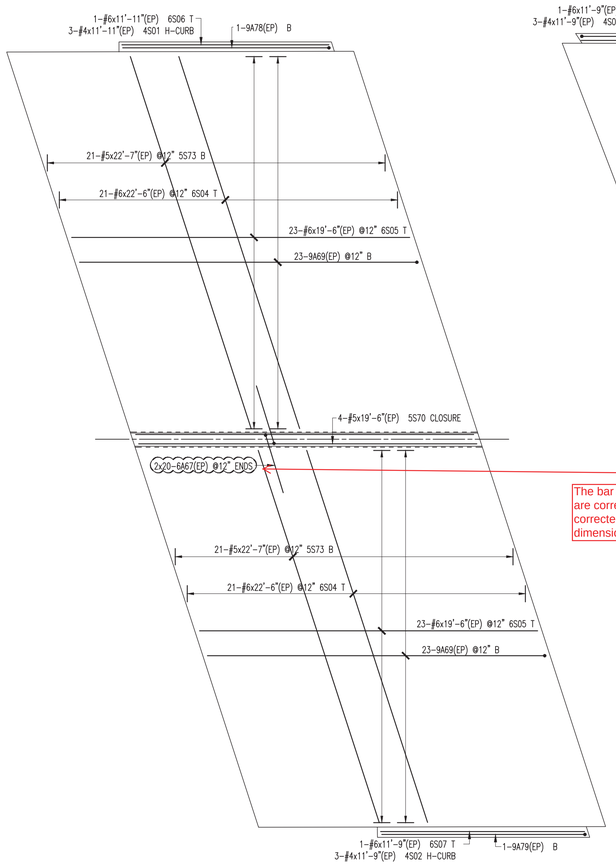

ABUTMENT 3 APPROACH SLAB

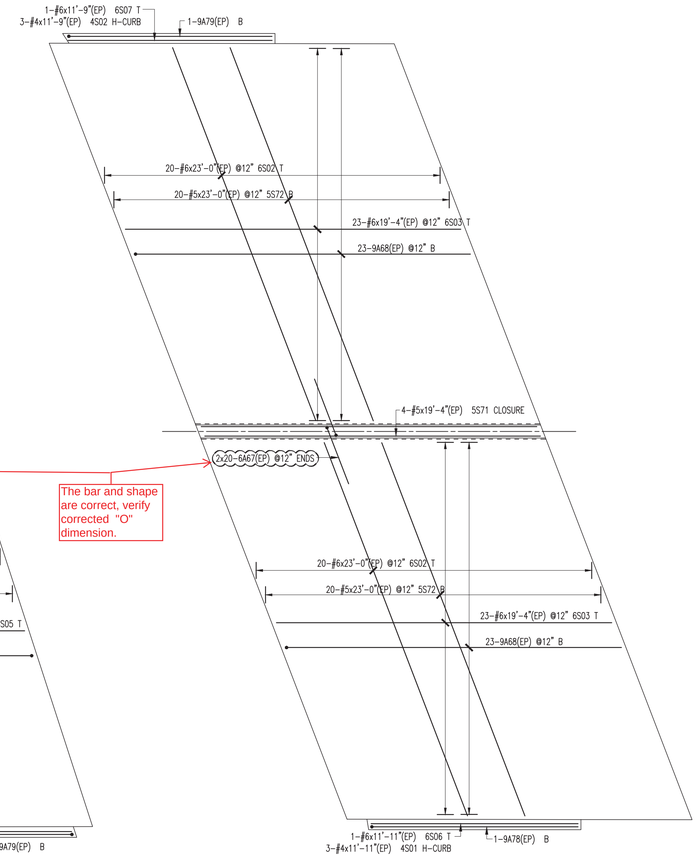

ABUTMENT 4 APPROACH SLAB

The bar and shape are correct, verify corrected "O" dimension.

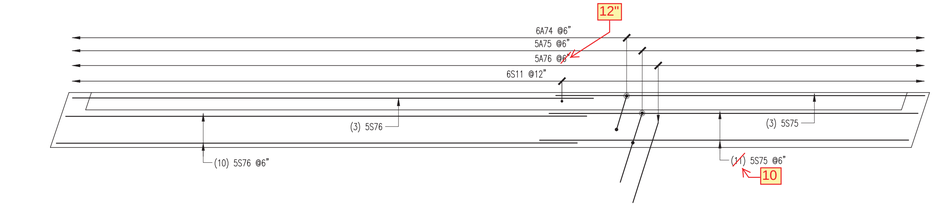

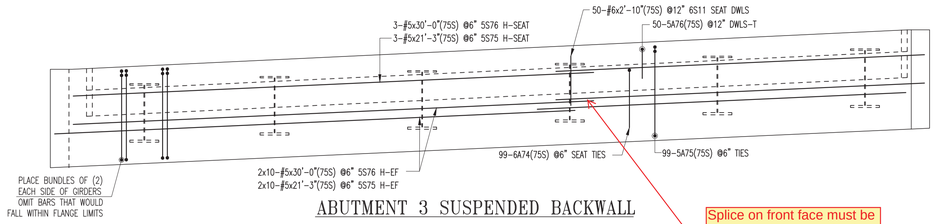

ABUTMENT 3 SUSPENDED BACKWALL

Splice on front face must be between girders. Holes in girder webs are not sized to accommodate splice.

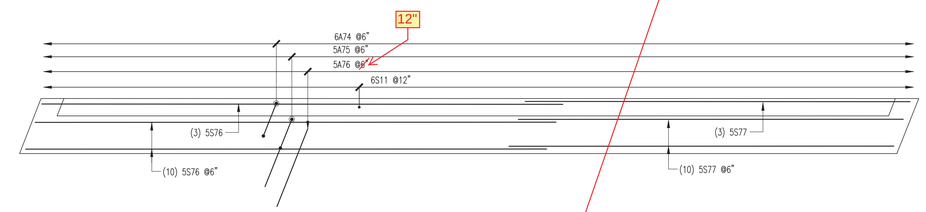

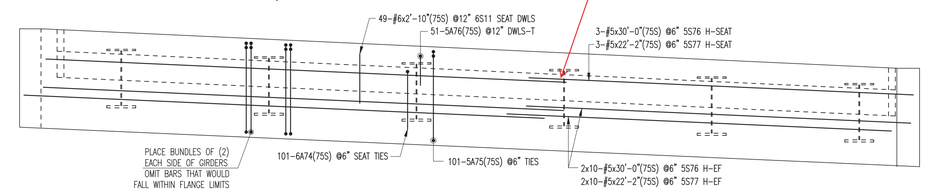

ABUTMENT 4 SUSPENDED BACKWALL

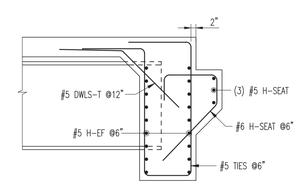

TYPICAL SUSPENDED BACKWALL SECTION

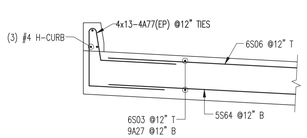

TYPICAL APPROACH SLAB @ CURB

SEE SHEET R06S FOR BAR LISTS
3" CLR COVER U.N.O.

LAP CHART-U.N.O.

SIZE	TOP BARS ★	OTHER BARS
#11		
#10		
#9		
#8	54"	54"
#7	41"	41"
#6	31"	31"
#5	26"	26"
#4		
#3		

★ -Top bars are horiz. bars with more than 12" of concrete cast below the bars.

All material in the suspended backwalls shall be ASTM A 955 Solid Stainless Reinforcing Steel in accordance with Subsection 713.01(f).

ALL MATERIAL ON THIS DRAWING NOTED AS (75S) SHALL BE ASTM "2304" GR75 STAINLESS STEEL

ALL MATERIAL ON THIS DRAWING NOTED AS (EP) SHALL BE ASTM A1055 GR60 "DUAL COATED" REINF.

Vermont Agency of Transportation
RECEIVED
CK'D BY RK/GL OK'D BY WL
February 19, 2015
RESUBMIT YES Rejected
BY KH DATE 3-5-2015

ENG. AND ARCH. PLEASE VERIFY ALL CLOUDED AREAS

No.	Description	Date	By
1	APPROVAL PRINT	02/18/15	CPS

Revisions and Issue Record

The full intent and purpose of this drawing is the placing of reinforcing steel bars ONLY. It is NOT to be used as a means of communication between the Architect, Engineer, Contractor or any other Sub-trades.

THIS DRAWING IS NOT TO BE SCALED.

HarrisRebar Barker Steel — National Strength. Local Service.

DETAILED AT: CANAAN NEW HAMPSHIRE

Project: HARTFORD LATERAL BRIDGE I-91 NORTHBOUND

Drawing: APPROACH SLABS AND BACKWALLS REINF.

Customer: PCL CIVIL CONSTRUCTORS

Engineer: G. LAROCHE

Refer to Release:

Date	Drawn	Chkd.	JOB No.	Dwg. No.
02/10/15	CPS		33505535	R05N

W:\csample\Projects\33505535\Placing Drawings\DWGs\R01N.dwg

5S84 - #6 FOR RW 5A, 5B

Bar Mark	Qty	Size	Total Length	Type	'A'	'B'	'C'	'D'	'E'	'F'	'G'	'H'	'J'	'K'	'O'	'R'
Drawing Sheet : R01N						BAR LIST										
5S23	24	#5	30'-0"			30'-0"										
5S01	24	#5	35'-11"			35'-11"										
5S02	24	#5	13'-0"			13'-0"										
7S01	224	#7	10'-6"			10'-6"										
5S63	19	#5	10'-6"			10'-6"										
5A01	76	#5	8'-5 ½"	25		1'-6"	2'-3 ¾"	10"	2'-3 ¾"	1'-6"		2'-3"		1'-1 ½"		
8A02	86	#8	15'-3"	17		5'-6"	9'-9"									
5S64	112	#5	5'-2"			5'-2"										
7S02	17	#7	14'-3"			14'-3"										
7S03	12	#7	14'-8"			14'-8"										
7S04	12	#7	15'-2"			15'-2"										
7S07	12	#7	15'-7"			15'-7"										
7S06	12	#7	16'-1"			16'-1"										
7S05	21	#7	16'-6"			16'-6"										
5S09	21	#5	14'-3"			14'-3"										
5S07	14	#5	14'-8"			14'-8"										
5S03	12	#5	15'-2"			15'-2"										
5S04	12	#5	15'-7"			15'-7"										
5S05	12	#5	16'-1"			16'-1"										
5S18	52	#5	16'-6"			16'-6"										
5S06	40	#5	32'-7"			32'-7"										
5S24 (86)	42	#5	32'-9"			32'-9"										
5S26	48	#5	11'-2"			11'-2"										
5A03	49	#5	7'-5"	17		2'-5"	2'-7"	2'-5"								
5S08 (21)	36	#5	11'-5"			11'-5"										
8A04	16	#8	14'-3"	17		5'-6"	8'-9"									
8S01	15	#8	5'-2"			5'-2"										
5S17	14	#5	12'-7"			12'-7"										
7S08	16	#7	12'-7"			12'-7"										
5S10	4	#5	7'-9"			7'-9"										
5A05	24	#5	7'-5"	17		2'-5"	2'-7"	2'-5"								
5S11	10	#5	8'-1"			8'-1"										
5S12	10	#5	6'-7"			6'-7"										
5A07	22	#5	6'-5"	17		2'-5"	1'-7"	2'-5"								
A08a	2	#5	2'-10"			2'-10"										
Varies To																
A08f	2	#5	7'-7"			7'-7"										
5S13	3	#5	7'-0"			7'-0"										
A10a	1	#5	2'-9"			2'-9"										
Varies To																
A10k	1	#5	6'-9"			6'-9"										
A09a	1	#5	2'-9"			2'-9"										
Varies To																
A09h	1	#5	6'-11"			6'-11"										
5A11	2	#5	9'-7"	3		8'-9 ½"	10"					6 ¾"		7 ½"	9'-4 ½"	
5A12	38	#5	4'-10" 4'-9 ½"	3		2'-5"	2'-5" 2'-4 ½"					2'-0"		1'-4"	3'-9"	
5S83	2	#5	6'-6"			6'-6"										
5A13	18	#5	12'-11"	16	2'-5"	4'-7"	1'-2"	4'-9"				3'-4 ½"		3'-4 ½"	4'-6 ½"	
5A06	18	#5	18'-9 ½"	22			2'-3" 2'-2"	14'1" 14'-5 ½"	2'-3" 2'-2"			1'-0.5" 1'-½"		1'-0.5" 1'-½"	18'-4" 18'-5"	
5S14	24	#5	6'-3"			6'-3"										
5S15	12	#5	8'-0"			8'-0"										
5A15	12	#5	4'-10"	3		2'-5"	2'-5"					2'-3 ½"		9" 8 ½"	3'-3" 3'-1 ½"	
5S16	2	#5	5'-3"			5'-3"										
5A14	23	#5	16'-5 ½"	22			2'-4"	11'-9 ½"	2'-4"			1'-4" 1'-5 ½"		1'-4 ½"	15'-5" 15'-6 ½"	
5A16	23	#5	4'-10"	3		2'-5"	2'-5"					2'-3" 2'-3 ½"		9" 8 ½"	3'-3" 3'-1 ½"	
5S22	7	#5	8'-3"			8'-3"										
5S21	2	#5	3'-7"			3'-7"										
5A17	2	#5	5'-7"	3		3'-8"	1'-11"					11"		1'-8 ½"	5'-4 ½"	
5S19	6	#5	8'-0"			8'-0"										
5S20 (8)	6	#5	5'-3"			5'-3"										
5A18	7	#5	11'-7"	3		6'-10"	4'-9"					3'-4 ½"		3'-3" 3'-3 ½"	10'-1 ½"	

75S (5S10 – 5A12) · 75S (5S14 – 5A15) · 75S (5S22 – 5A18)

CONTRACT PLAN HAS A #5 BAR IN THIS LOCATION - THE NAMING CONVENTION HAS THIS BAR AS A #8. CONSIDER RENUMBERING

STAINLESS AND BLACK STEEL SHOULD HAVE THEIR OWN BAR MARK: 18 BLACK 20 STAINLESS

ABUTMENT 1 AND WING WALLS 1&2

QUANTITY SEEMS HIGH I'M GETTING 94

Bar Mark	Qty	Size	Total Length	Type	'A'	'B'	'C'	'D'	'E'	'F'	'G'	'H'	'J'	'K'	'O'	'R'
Drawing Sheet : R02N						BAR LIST										
5A03	133	#5	7'-5"	17		2'-5"	2'-7"	2'-5"								
5S35	19	#5	6'-5"			6'-5"										
5A05	23 22	#5	7'-5"	17		2'-5"	2'-7"	2'-5"								
5S39	16	#5	6'-8"			6'-8"										
5S36	6	#5	5'-8"			5'-8"										
5S37	6	#5	5'-0"			5'-0"										
5S38	6	#5	7'-8"			7'-8"										
5S40	10	#5	4'-0"			4'-0"										
5A07	18 15	#5	6'-5"	17		2'-5"	1'-7"	2'-5"								
5S55	2	#5	4'-0"			4'-0"										
5A13	16	#5	12'-11"	16	2'-5"	4'-7"	1'-2"	4'-9"				3'-4 ½"		3'-4 ½"	4'-6 ½"	
5A20	39	#5	5'-4"	H91		2'-8"	2'-8"					2'-6" 2'-7"		11" 10 ½"		
5A21	27	#5	13'-5"	22			2'-5"	8'-7"	2'-5"			1'-11" 1'-11 ½"		1'-11.25" 2'-¼"	11'-4" 11'-3"	
5S42	2	#5	5'-0"			5'-0"										
5S22	6	#5	8'-3"			8'-3"										
5S41	2	#5	3'-5"			3'-5"										
5A22	2	#5	5'-3"	3		3'-2"	2'-1"					1'-½"		1'-9 ½"	4'-11 ½"	
5A18	6	#5	11'-7"	3		6'-10"	4'-9"					3'-4 ½"		3'-3" 3'-3 ½"	10'-1" 10'-1 ½"	
5S43	30	#5	19'-7"			19'-7"										
5S64	124	#5	5'-2"			5'-2"										
5S53	26	#5	17'-3"			17'-3"										
5S46	22	#5	11'-9"			11'-9"										
5S47	38	#5	10'-10"			10'-10"										
5S50	12	#5	7'-6"			7'-6"										
5S49	2	#5	4'-4"			4'-4"										
5S48	2	#5	6'-3"			6'-3"										
5A23	2	#5	7'-11"	3		7'-4"	7"					3 ½"		6 ½"	7'-10 ½"	
A24a	1	#5	4'-3"			4'-3"										
Varies To																
A24i	1	#5	6'-8"			6'-8"										
5S51	5	#5	6'-11"			6'-11"										
8A25	23	#8	13'-4"	17		4'-7"	8'-9"									
5S52	11	#5	15'-7"			15'-7"										
7S15	16	#7	15'-7"			15'-7"										
7S16	24	#7	17'-3"			17'-3"										
5A27	40	#5	4'-8"	3		2'-4"	2'-4"					1'-8 ½"		1'-8" 1'-7 ½"	3'-11 ½"	
5S54	2	#5	3'-11"			3'-11"										
5A28	22	#5	21'-0"	22			2'-3"	16'-6" 16'-6 ½"	2'-3"			11"		11"	20'-7" 20'-7 ½"	
5S23	32	#5	30'-0"			30'-0"										
5S84	16	#5	9'-6"			9'-6"										
7S09	148	#7	8'-6"			8'-6"										
7A19	85	#7	14'-4"	17		4'-7"	9'-9"									
5S24	48	#5	32'-9"			32'-9"										
5S25	26	#5	33'-0"			33'-0"										
5S26	2	#5	11'-2"			11'-2"										
5S27	26	#5	32'-1"			32'-1"										
5S28	1	#5	15'-0"			15'-0"										
5S29	1	#5	14'-1"			14'-1"										
5S30	12	#5	18'-2"			18'-2"										
7S10	12	#7	18'-2"			18'-2"										
7S11	12	#7	17'-8"			17'-8"										
5S31	12	#5	17'-8"			17'-8"										
5S32	12	#5	18'-8"			18'-8"										
7S12	12	#7	18'-8"			18'-8"										
5S44	12	#5	19'-1"			19'-1"										
7S13	12	#7	19'-1"			19'-1"										
5S45	12	#5	19'-10"			19'-10"										
7S14	12	#7	19'-10"			19'-10"										
5S33	27	#5	11'-0"			11'-0"										
5S34	27	#5	7'-4"			7'-4"										
9S01	13	#9	40'-0"			40'-0"										
A26a	1	#5	4'-3"			4'-3"										
Varies To																
A26m	1	#5	6'-8"			6'-8"										

(75S) (5S35 – 5A07) · (75S) (5S22 – 5A18) · (75S) (5S50 – 5S51) · (75S) (9S01 – A26m)

STAINLESS AND BLACK STEEL SHOULD HAVE THEIR OWN BAR MARK: 27 BLACK 12 STAINLESS

STAINLESS AND BLACK STEEL SHOULD HAVE THEIR OWN BAR MARK: 24 BLACK 16 STAINLESS

CONTRACT PLAN HAS A #8 BAR IN THIS LOCATION - THE NAMING CONVENTION HAS THIS BAR AS A #7. CONSIDER RENUMBERING

ABUTMENT 2 AND WING WALLS 3&4

Bar Mark	Qty	Size	Total Length	Type	'A'	'B'	'C'	'D'	'E'	'F'	'G'	'H'	'J'	'K'	'O'	'R'
Drawing Sheet : R03N						BAR LIST										
5S62	60	#5	8'-8"			8'-8"										
5S82	146	#5	7'-6"			7'-6"										
5S56	14	#5	5'-6"			5'-6"										
5A29	20	#5	7'-10 ½"	20		2'-2"	3'-6 ½"	2'-2"								
5A30	5	#5	9'-3 ½"	3		2'-2"	4'-11 ½"	2'-2"				3'-6"		3'-6"	7'-10"	
5A31	5	#5	9'-7 ½"	3		3'-3 ¾"	4'-11 ½"	1'-4 ½"				3'-6"		3'-6"	8'-2"	
5S84	49	#5	9'-6"			9'-6"										
5S65	87	#5	4'-2"			4'-2"										
6A32	32	#5 #6	7'-7" 8'-2"	17		3'-7"	4'-2" 4'-7"									
5A33	48	#5	7'-9"	17		3'-7"	4'-2"									
5S66	20	#5	15'-6"			15'-6"										
5S57	16	#5	21'-6"			21'-6"										
A35a	1	#6	10'-7"			10'-7"										
Varies To																
A35p	1	#6	10'-10"			10'-10"										
A36a	12	#5	6'-11"			6'-11"										
A37a	7	#5	6'-11"			6'-11"										
Varies To																
A38b	1	#5	10'-10"			10'-10"										
5A40	95	#5	5'-11"	17		2'-5" 2'-2"	1'-7"	2'-5" 2'-2"								
5S83	44	#5	6'-6"			6'-6"										
5S58	14	#5	4'-8"			4'-8"										
5S59	14	#5	2'-5"			2'-5"										
5S60	2	#5	7'-1"			7'-1"										
A41a	1	#5	6'-5"			6'-5"										
Varies To																
A41h	1	#5	9'-4"			9'-4"										
A42a	1	#5	6'-5"			6'-5"										
Varies To																
A42n	1	#5	9'-4"			9'-4"										
5A45	5	#5	11'-2"	3		3'-4"	5'-8"	2'-2"				4'-0"		4'-0"	9'-6"	
6S01	50	#6	9'-6"			9'-6"										
5S85	25	#5	8'-0"			8'-0"										
5S63	28	#5	10'-6"			10'-6"										
5A43	20	#5	8'-4 ½"	20		2'-2"	4'-½"	2'-2"								
5A44	5	#5	10'-0"	3		2'-2"	5'-8"	2'-2"				4'-0"		4'-0"	8'-4"	
8A46	32	#8	7'-11" 10'-1"	17		3'-7"	4'-4" 6'-6"									
5S61	20	#5	26'-6"			26'-6"										
A47a	1	#8	16'-10"			16'-10"										
Varies To																
A47p	1	#8	17'-4"			17'-4"										
A50a	3	#5	7'-8"			7'-8"										
Varies To																
A50d	3	#5	8'-2"			8'-2"										
A51a	3	#5	12'-5"			12'-5"										
Varies To																
A51c	2	#5	12'-9"			12'-9"										
A52a	3	#5	16'-11"			16'-11"										
Varies To																
A52c	2	#5	17'-3"			17'-3"										
5A53	5 9	#5	8'-4"	3		3'-4"	2'-10"	2'-2"				2'-0"		2'-0"	7'-6"	
5A54	10 18	#5	7'-2"	3		2'-2"	2'-10"	2'-2"				2'-0"		2'-0"	6'-4"	
5A55	9	#5	5'-10 ½"	20		2'-8"	1'-½"	2'-2"								
5A56	18	#5	6'-4 ½"	20		2'-2"	2'-½"	2'-2"								
5S64	8	#5	5'-2"			5'-2"										
7A57	70	#7	10'-1"	17		3'-7"	6'-6"									
5S67	4	#5	23'-6"			23'-6"										
5S68	4	#5	34'-6"			34'-6"										
A58a	2	#5	5'-9"			5'-9"										
Varies To																
A58g	2	#5	33'-4"			33'-4"										
5S69	2	#5	35'-4"			35'-4"										
A59a	1	#7	16'-10"			16'-10"										
Varies To																
A59p	1	#7	18'-6"			18'-6"										
A60a	2	#5	14'-1"			14'-1"										
Varies To																
A60h	2	#5	15'-8"			15'-8"										
A61a	2	#5	10'-5"			10'-5"										
Varies To																
A61h	2	#5	11'-11"			11'-11"										
A62a	2	#5	6'-0"			6'-0"										
Varies To																
A62k	2	#5	8'-2"			8'-2"										
A63a	1	#5	6'-0"			6'-0"										
Varies To																
A63l	1	#5	8'-4"			8'-4"										
A64a	1	#5	10'-6"			10'-6"										
Varies To																
A64h	1	#5	12'-0"			12'-0"										
A65a	1	#5	14'-2"			14'-2"										
Varies To																
A65h	1	#5	15'-9"			15'-9"										
A66a	1	#5	17'-0"			17'-0"										
Varies To																
A66h	1	#5	18'-6"			18'-6"										
5A96	90	#5	6'-6"	25		1'-6"	1'-4"	10"	1'-4"	1'-6"		1'-3 ½"		7 ¾"		
5A01	9	#5	8'-5 ½"	25		1'-6"	2'-3 ¾"	10"	2'-3 ¾"	1'-6"		2'-3"		1'-1 ½"		
A34a	1	#6	14'-4"			14'-4"										
Varies To																
A34p	1	#6	14'-7"			14'-7"										
Varies To																
A39b	1	#5	14'-7"			14'-7"										
A48a	6	#8	12'-4"			12'-4"										
Varies To																
A48c	4	#8	12'-9"			12'-9"										
A49a	6	#5	7'-8"			7'-8"										
Varies To																
A49d	4	#5	8'-3"			8'-3"										

RENUMBER? (5S84) · RENUMBER? (6A32) · RENUMBER? (8A46)

#5 FOR RW 5A, 5B

#8 FOR RW 7A, 7B, AND #7 FOR RW 8A

#6 FOR RW 7A

A48 ON RW 7B MISSING FROM SCHEDULE

CONTRACT PLAN ERROR:
16 - #7 BAR FOR ONLY RW 8A.
54 - #5 L BARS FOR RW 8B, 8C, 8D

RETAINING WALLS 5,6,7,8

Bar Mark	Qty	Size	Total Length	Type	'A'	'B'	'C'	'D'	'E'	'F'	'G'	'H'	'J'	'K'	'O'	'R'
Drawing Sheet : R04N						BAR LIST										
8S02	8	#8	16'-5"			16'-5"										
8S03	32	#8	30'-0"			30'-0"										
7S17	8	#7	12'-5"			12'-5"										
7S18	32	#7	30'-0"			30'-0"										
5A70	418	#5	7'-9"	H2		10 ½"	2'-9"	1'-2 ½"	2'-11"				2 ½"		5 ½"	4 ½"
5A71	378	#5	4'-10"	H1		1'-3"	8 ¾"	1'-1"	6 ½"	1'-3"			5"		2'-4 ¾"	3"
5A72	76	#5	9'-7"	H3		1'-6"	3'-2 ½"	5"	2'-11 ½"	1'-6"						
7S19	8	#7	12'-9"			12'-9"										
7S20	32	#7	14'-4"			14'-4"										
A73a	4	#5	5'-8"	17		2'-7"	6"	2'-7"								
Varies To																
A73i	4	#5	7'-6"	17		3'-6"	6"	3'-6"								
5S76	376	#5	30'-0"			30'-0"										
5S74	94	#5	24'-5"			24'-5"										
6S08	507	#6	24'-7"			24'-7"										
A82a	1	#6	2'-2"			2'-2"										
Varies To																
A82r	1	#6	25'-5"			25'-5"										
6S09	56	#6	30'-0"			30'-0"										
6S10	14	#6	26'-1"			26'-1"										
A83a	1	#6	4'-6"			4'-6"										
Varies To																
A83n	1	#6	22'-4"			22'-4"										
5A84	124	#5	5'-4"	1	7"	4'-9"							5"			
4A85	460	#4	4'-10"	1	6"	4'-4"							4"			
5A86	481	#5	3'-4 ½"	1	7"	2'-9 ½"							5"			
A88a	1	#5	2'-7"			2'-7"										
Varies To																
A88s	1	#5	27'-4"			27'-4"										
A89a	1	#5	18'-2"			18'-2"										
Varies To																
A89f	1	#5	25'-0"			25'-0"										
A90a	1	#5	17'-10"			17'-10"										
Varies To																
A90f	1	#5	24'-9"			24'-9"										
5S78	7	#5	18'-6"			18'-6"										
5S79	6	#5	10'-0"			10'-0"										
A91a	1	#5	2'-2"			2'-2"										
Varies To																
A91s	1	#5	26'-10"			26'-10"										
A92a	1	#5	18'-2"			18'-2"										
Varies To																
A92f	1	#5	25'-0"			25'-0"										
A93a	1	#5	17'-11"			17'-11"										
Varies To																
A93f	1	#5	24'-9"			24'-9"										
5S80	6	#5	19'-11"			19'-11"										
5S81	6	#5	11'-5"			11'-5"										
A94a	5	#5	6'-4"			6'-4"										
Varies To																
A94h	5	#5	8'-11"			8'-11"										
A95a	5	#5	6'-3"			6'-3"										
Varies To																
A95h	5	#5	8'-10"			8'-10"										
A80a	1	#6	2'-7"			2'-7"										
Varies To																
A80r	1	#6	25'-11"			25'-11"										
A81a	1	#6	5'-4"			5'-4"										
Varies To																
A81m	1	#6	21'-10"			21'-10"										

DECK REINFORCEMENT

Bar Mark	Qty	Size	Total Length	Type	'A'	'B'	'C'	'D'	'E'	'F'	'G'	'H'	'J'	'K'	'O'	'R'
Drawing Sheet : R05N						BAR LIST										
6A74	200	#6	7'-3"	16	1'-0"	2'-1"	1'-2"	3'-0"				2'-1 ½"		2'-1 ½"	3'-3 ½"	
5A75	200	#5	16'-9"	H66		2'-5"	5'-2"	1'-10"	4'-11"	2'-5"				3 ½"		
5A76	101	#5	5'-6"	3		3'-1"	2'-5"					1'-8 ½"		1'-8 ½"	4'-9 ½"	
4A77	52	#4	7'-0"	H3		2'-2"	1'-6 ½"	3 ¾"	10"	2'-2"						1 ½"
9A78	2	#9	13'-2"	1	1'-3"	11'-11"							11 ¾"			
6S06	2	#6	11'-11"			11'-11"										
4S01	6	#4	11'-11"			11'-11"										
9A79	2	#9	13'-0"	1	1'-3"	11'-9"							11 ¾"			
6S07	2	#6	11'-9"			11'-9"										
4S02	6	#4	11'-9"			11'-9"										
5S76	46	#5	30'-0"			30'-0"										
5S75	23	#5	21'-3"			21'-3"										
5S77	23	#5	22'-2"			22'-2"										
6S11	99	#6	2'-10"			2'-10"										
9A69	46	#9	20'-8 ½"	1	1'-3"	19'-5 ¾"							11 ¾"			
6S05	46	#6	19'-6"			19'-6"										
9A68	46	#9	20'-7"	1	1'-3"	19'-4"							11 ¾"			
6S03	46	#6	19'-4"			19'-4"										
6S02	40	#6	23'-0"			23'-0"										
5S72	40	#5	23'-0"			23'-0"										
5S73	42	#5	22'-7"			22'-7"										
6S04	42	#6	22'-6"			22'-6"										
5S70	4	#5	19'-6"			19'-6"										
5S71	4	#5	19'-4"			19'-4"										
6A67	80	#6	7'-2 ¾"	S11		7'-2 ¾"						3'-6"			7"	

7.125" will match SB.

APPROACH SLABS AND SUSPENDED BACKWALLS

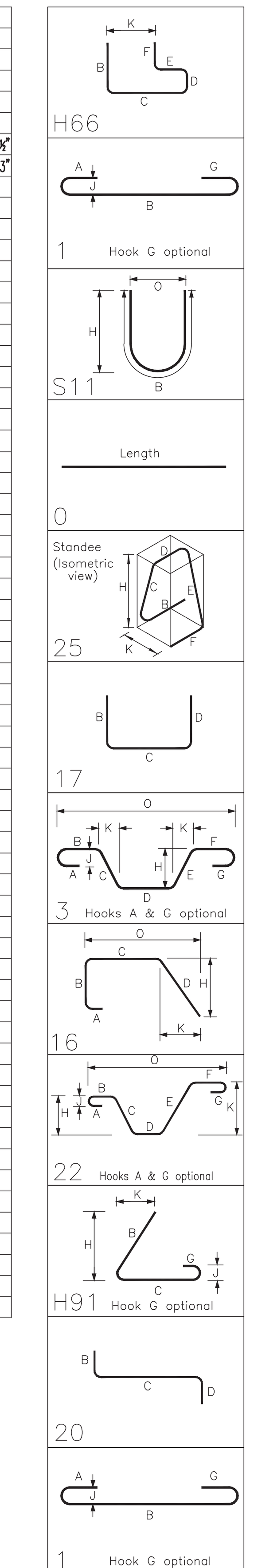

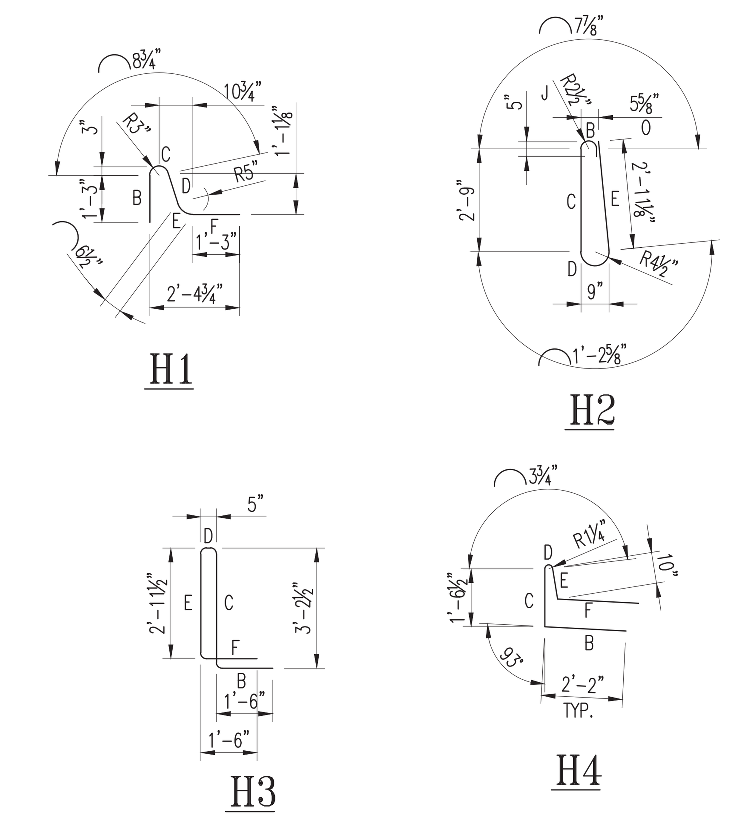

SPECIAL BEND DETAILS

Vermont Agency of Transportation
RECEIVED
CK'D BY RK/GL OK'D BY WL
February 19, 2015
RESUBMIT YES Rejected
BY KH DATE 3-5-2015

THIS NOTE APPLIES TO 43N AND THE PREVIOUSLY RETURNED 43S SCHEDULE.
Ensure that test bars are provided in accordance with the "Vermont Agency of Transportation Material Sampling Manual", available on the Agency website. A minimum of one test bar for each 100,000 lbs/size/grade and type of reinforcement (coating) shall be provided for each superstructure; each abutment; the four precast approach slabs as a group; and, the retaining walls as a group for each bridge. See the manual for acceptable dimensions of test sections. All cost associated with providing bars for testing shall be included in each reinforcing steel item or precast unit, as appropriate.

Material/coating should be identified in bar lists.

No.	Description	Date	By
1	APPROVAL PRINT	02/18/15	CPS

Revisions and Issue Record

The full intent and purpose of this drawing is the placing of reinforcing steel bars ONLY. It is NOT to be used as a means of communication between the Architect, Engineer, Contractor or any other Sub-trades.

THIS DRAWING IS NOT TO BE SCALED.

HarrisRebar Barker Steel — National Strength. Local Service.

DETAILED AT: CANAAN NEW HAMPSHIRE

Project: HARTFORD LATERAL BRIDGE I-91 NORTHBOUND

Drawing: BAR SCHEDULES

Customer: PCL CIVIL CONSTRUCTORS
Engineer: G. LAROCHE
Refer to Release:

Date	Drawn	Chkd.	JOB No.	Dwg. No.
02/10/15	CPS		33505535	R06N

W:\csample\Projects\33505535\Placing Drawings\DWGs\R01N.dwg

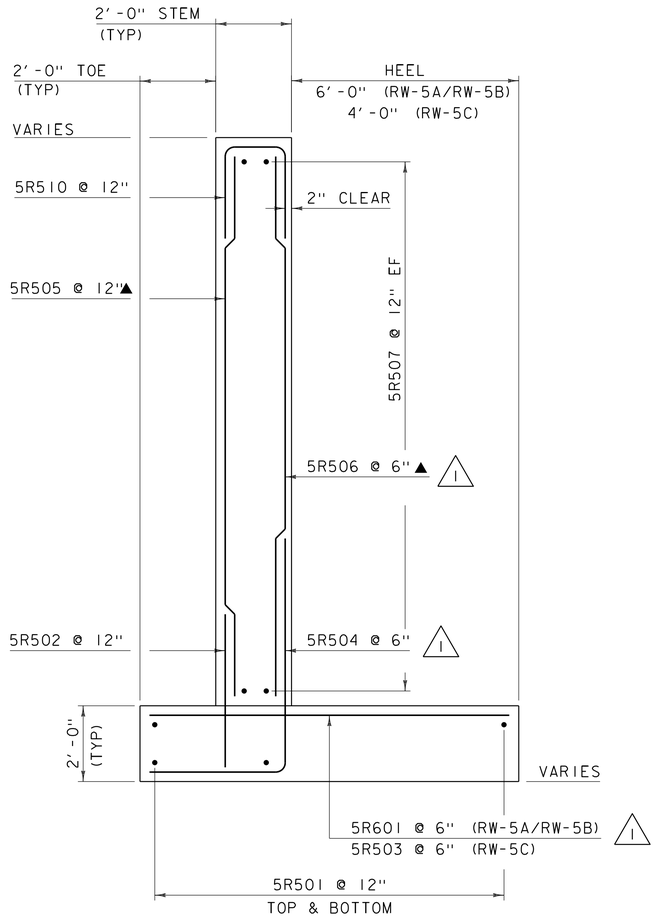

RETAINING WALL #5 TYPICAL

SCALE 1/2 = 1'-0"

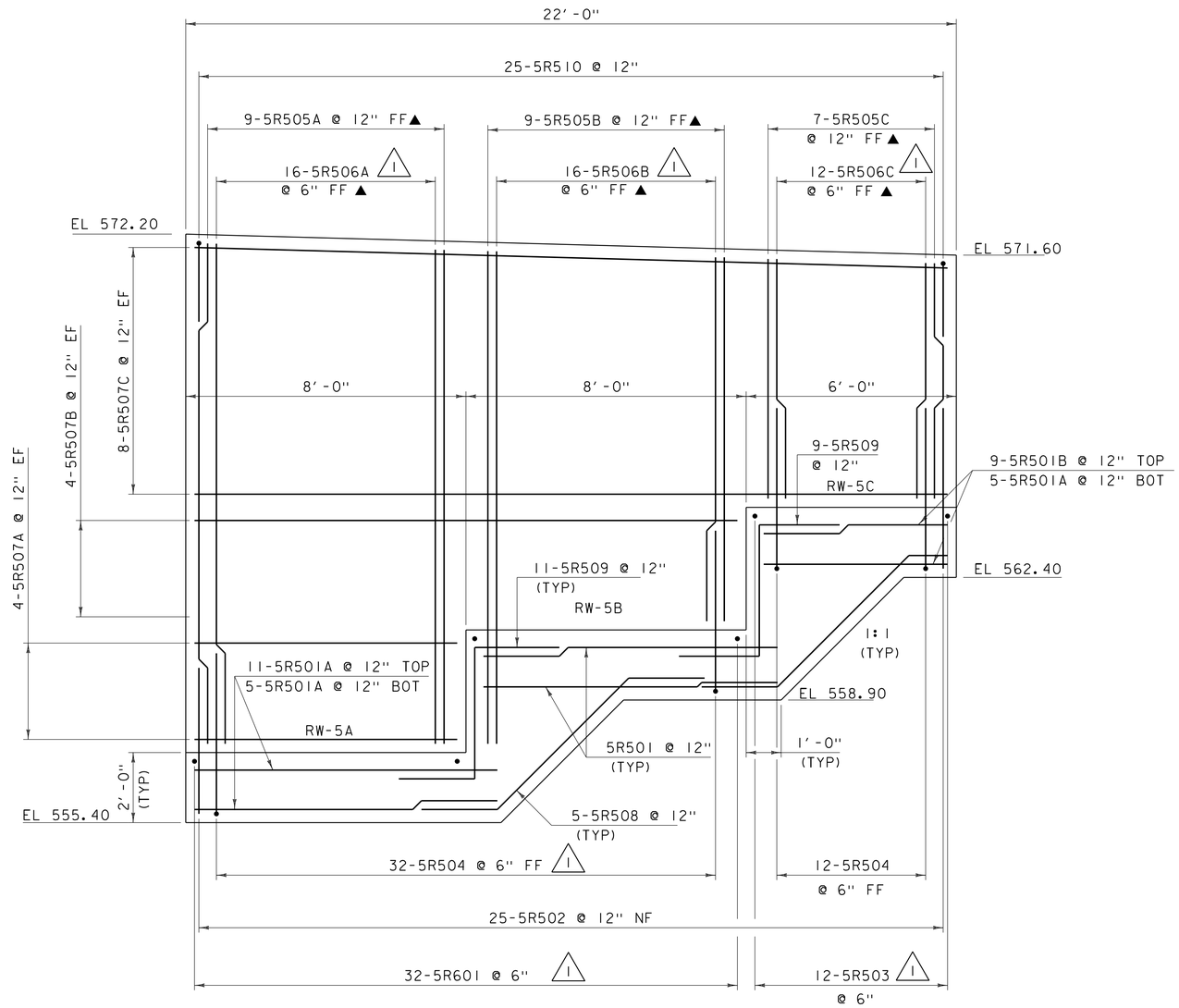

RETAINING WALL #5 ELEVATION

SCALE 1/2 = 1'-0"

NOTE:

NF = NEAR FACE
FF = FAR FACE
EF = EACH FACE
▲ = CUT TO FIT IN FIELD
3" CLEAR, UNLESS OTHERWISE SPECIFIED ON THE PLANS.
2'-2" LAP FOR #5 BAR
2'-7" LAP FOR #6 BAR
3'-5" LAP FOR #7 BAR
4'-6" LAP FOR #8 BAR

REVISION	DATE	DESCRIPTION	BY
1	03-05-2015	BAR CHANGES PER DESIGN	JS

PROJECT NAME: HARTFORD
PROJECT NUMBER: IM 091-2(79)

FILE NAME: s12a132retwall.dgn
PROJECT LEADER: K. HIGGINS
DESIGNED BY: G. LAROCHE
RETAINING WALL #5

PLOT DATE: 05-MAR-2015
DRAWN BY: J. SALVATORI
CHECKED BY: J. GRIGAS
SHEET 121 OF 166

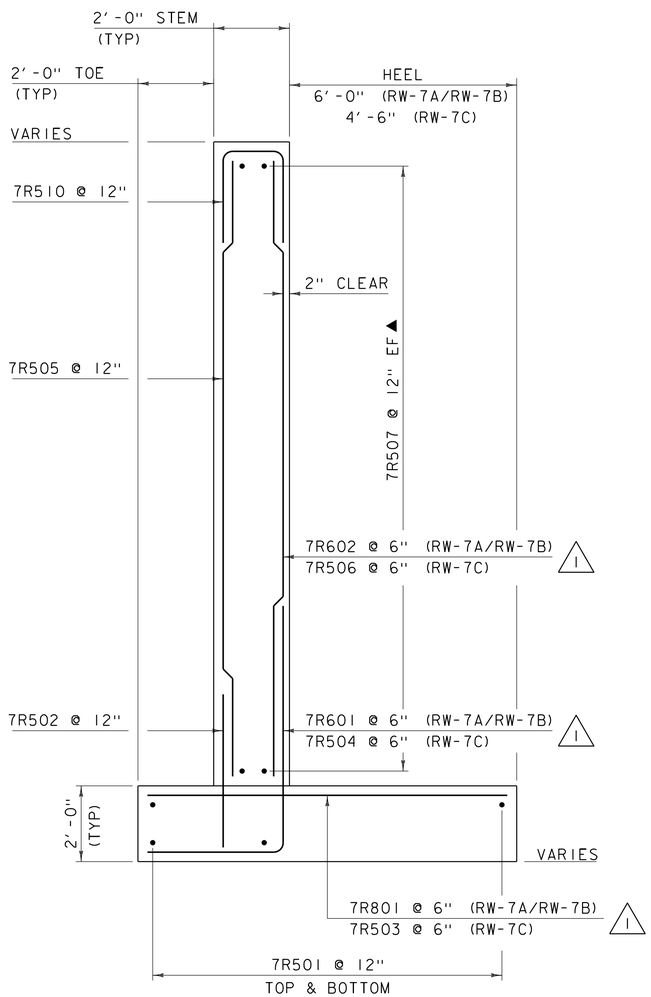

RETAINING WALL #7 TYPICAL

SCALE ½ = 1'-0"

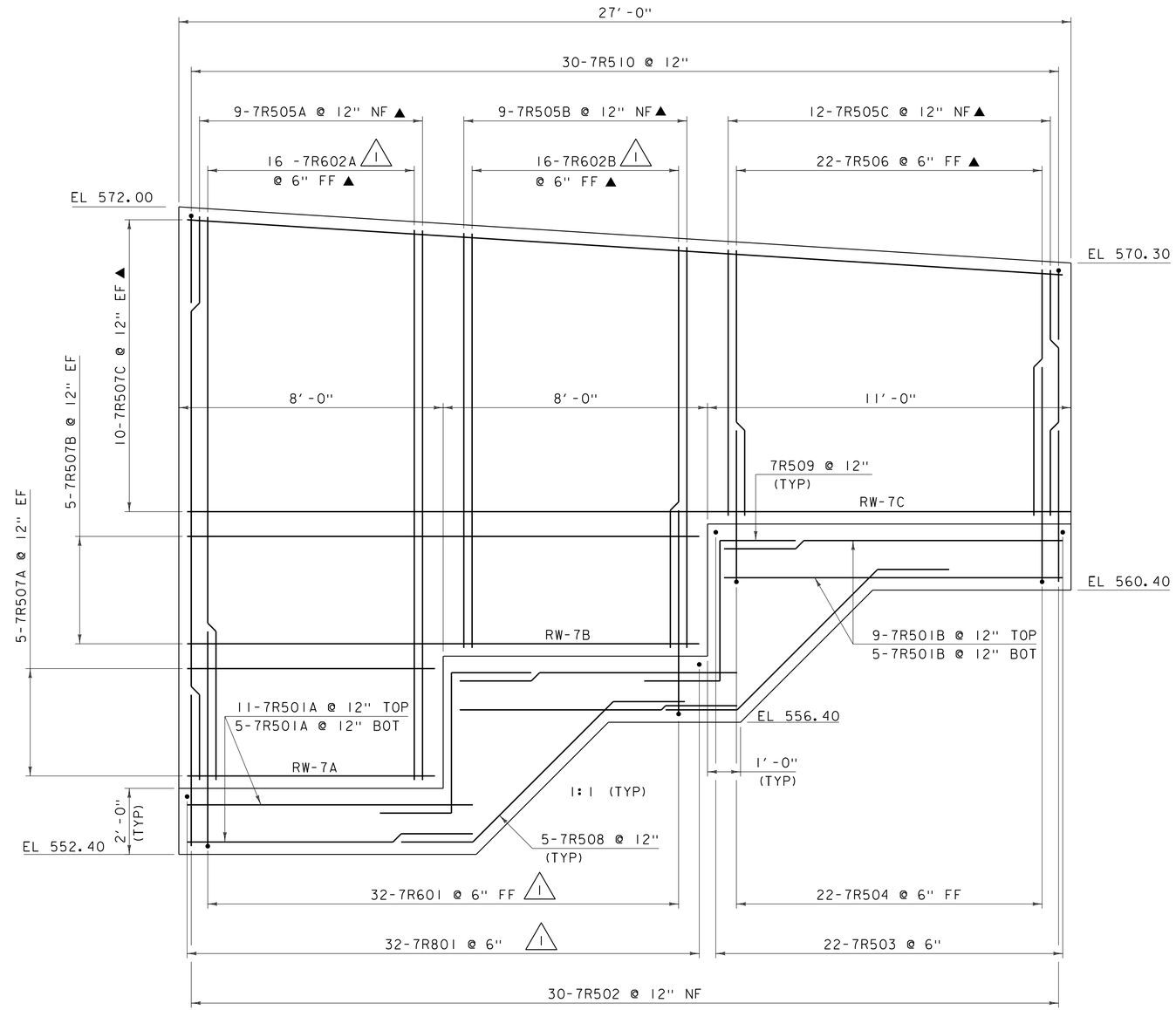

RETAINING WALL #7 ELEVATION

SCALE ½ = 1'-0"

NOTE:

NF = NEAR FACE
FF = FAR FACE
EF = EACH FACE
▲ = CUT TO FIT IN FIELD
3" CLEAR, UNLESS OTHERWISE SPECIFIED ON THE PLANS.
2'-2" LAP FOR #5 BAR
2'-7" LAP FOR #6 BAR
3'-5" LAP FOR #7 BAR
4'-6" LAP FOR #8 BAR

REVISION	DATE	DESCRIPTION	BY
1	03-05-2015	BAR CHANGES PER DESIGN	JS

PROJECT NAME: HARTFORD
PROJECT NUMBER: IM 091-2(79)

FILE NAME: s12a132retwall.dgn
PROJECT LEADER: K. HIGGINS
DESIGNED BY: G. LAROCHE
RETAINING WALL #7

PLOT DATE: 05-MAR-2015
DRAWN BY: J. SALVATORI
CHECKED BY: J. GRIGAS
SHEET 123 OF 166

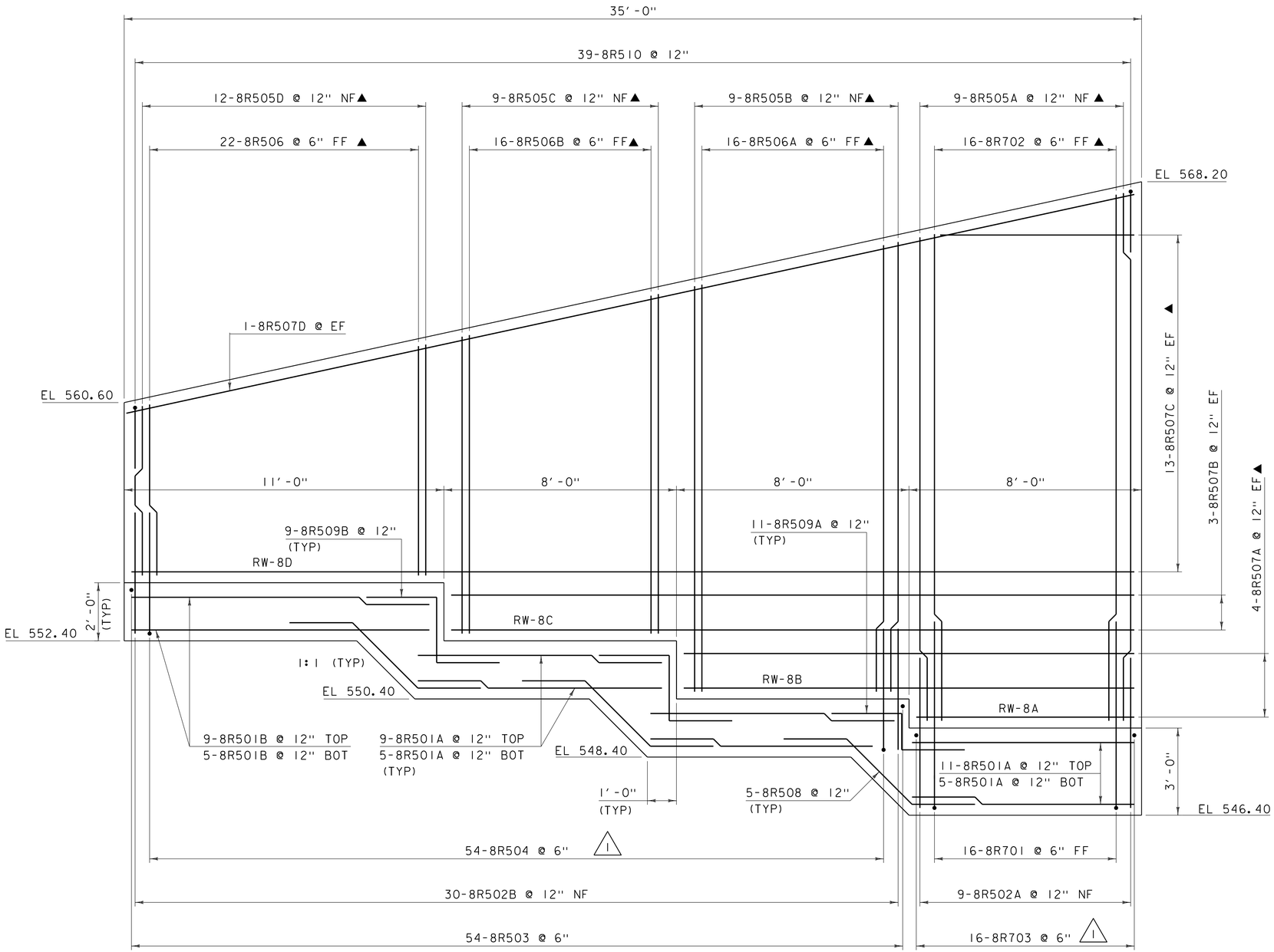

RETAINING WALL #8 ELEVATION

SCALE ½ =1'-0"

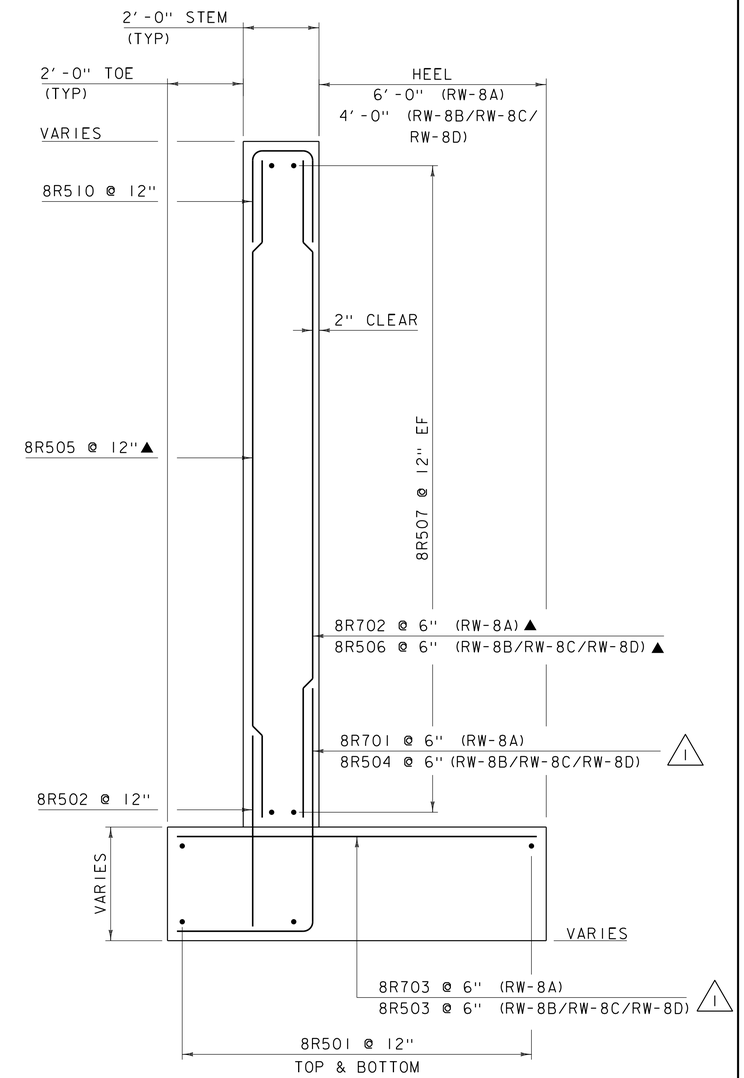

RETAINING WALL #8 TYPICAL

SCALE ½ =1'-0"

NOTE:

NF = NEAR FACE
FF = FAR FACE
EF = EACH FACE
▲ = CUT TO FIT IN FIELD
3" CLEAR, UNLESS OTHERWISE SPECIFIED ON THE PLANS.
2'-2" LAP FOR #5 BAR
2'-7" LAP FOR #6 BAR
3'-5" LAP FOR #7 BAR
4'-6" LAP FOR #8 BAR

REVISION	DATE	DESCRIPTION	BY
1	03-05-2015	BAR CHANGES PER DESIGN	JS

PROJECT NAME: HARTFORD
PROJECT NUMBER: IM 091-2(79)

FILE NAME: s12a132retwall.dgn
PROJECT LEADER: K. HIGGINS
DESIGNED BY: C. LAROCHE
RETAINING WALL #8

PLOT DATE: 05-MAR-2015
DRAWN BY: J. SALVATORI
CHECKED BY: J. GRIGAS
SHEET 124 OF 166