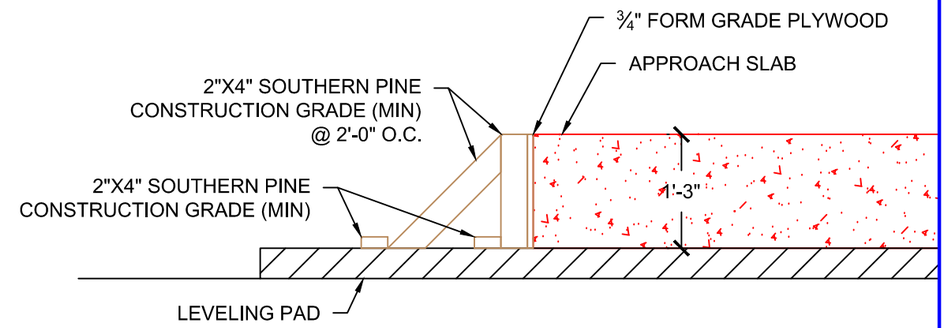

DETAIL A

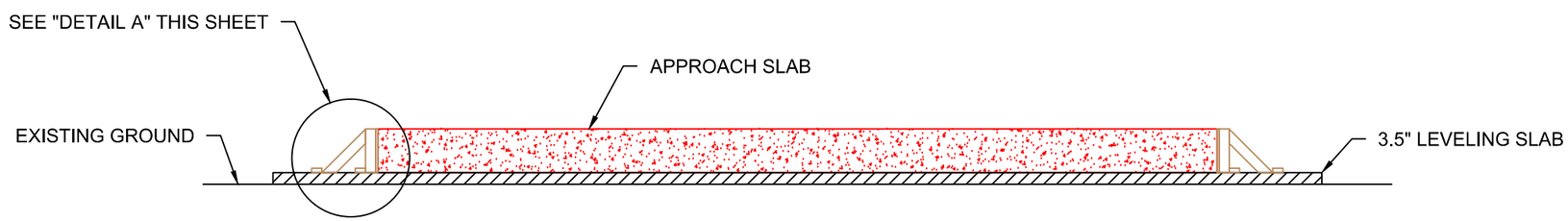

APPROACH SLAB LEVELING PAD & FORMWORK

Vermont Agency of Transportation
RECEIVED
CK'D BY WL OK'D BY JS
May 7, 2015
RESUBMIT YES Rejected
BY KH DATE 05/19/2015

Revision No. & Date	Vermont Agency of Transportation			Drawing Status		Name	Date	PCL Civil Constructors, Inc. 3810 Northdale Blvd. Suite 200, Tampa Florida 33624 (813)-264-9500 ; Fax: (813)-264-6689	
				May 7 2015 8:39 AM	Drawn By	EWH	04/13/2015		
	Road No.	County / City	Financial Project ID No.	FOR CONSTRUCTION	Design By	EWH	04/13/2015	Submittal APPROACH SLABS	PCL Project / Job No. I-91 Hartford / 5514001
	I-91	Hartford	IM 091-2(79)		Check By	TMD	05/05/2015	Drawing Title LEVELING PAD & FORMWORK	Sheet No. 4

STATE OF VERMONT TIMOTHY DAVIS NO. 97183 CIVIL LICENSED PROFESSIONAL ENGINEER

Vermont Agency of Transportation
RECEIVED
CK'D BY WL OK'D BY JS
May 7, 2015
RESUBMIT BY KH YES Rejected DATE 05/19/2015

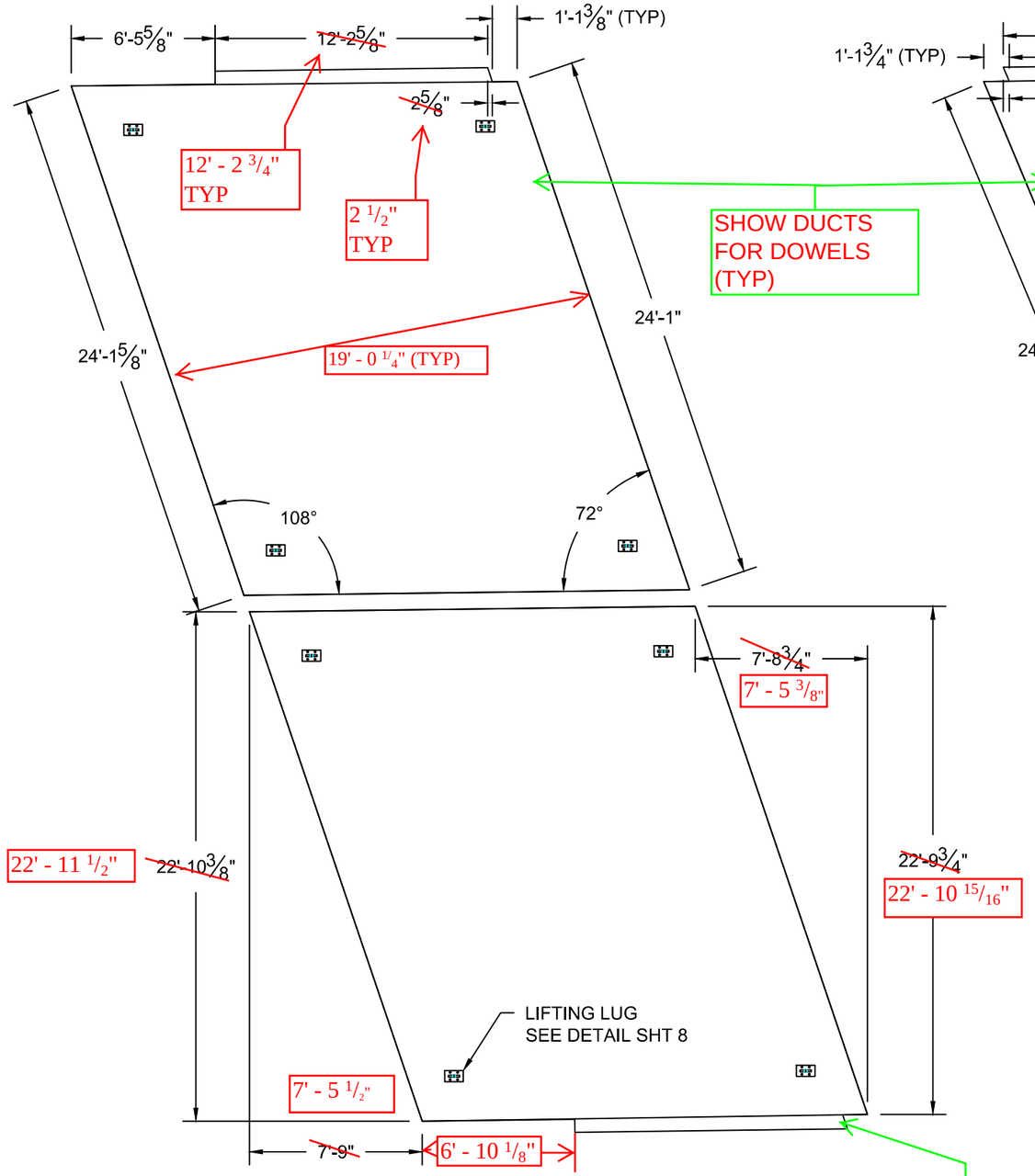

ABUTMENT 1 APPROACH SLABS

SHOW DUCTS FOR DOWELS (TYP)

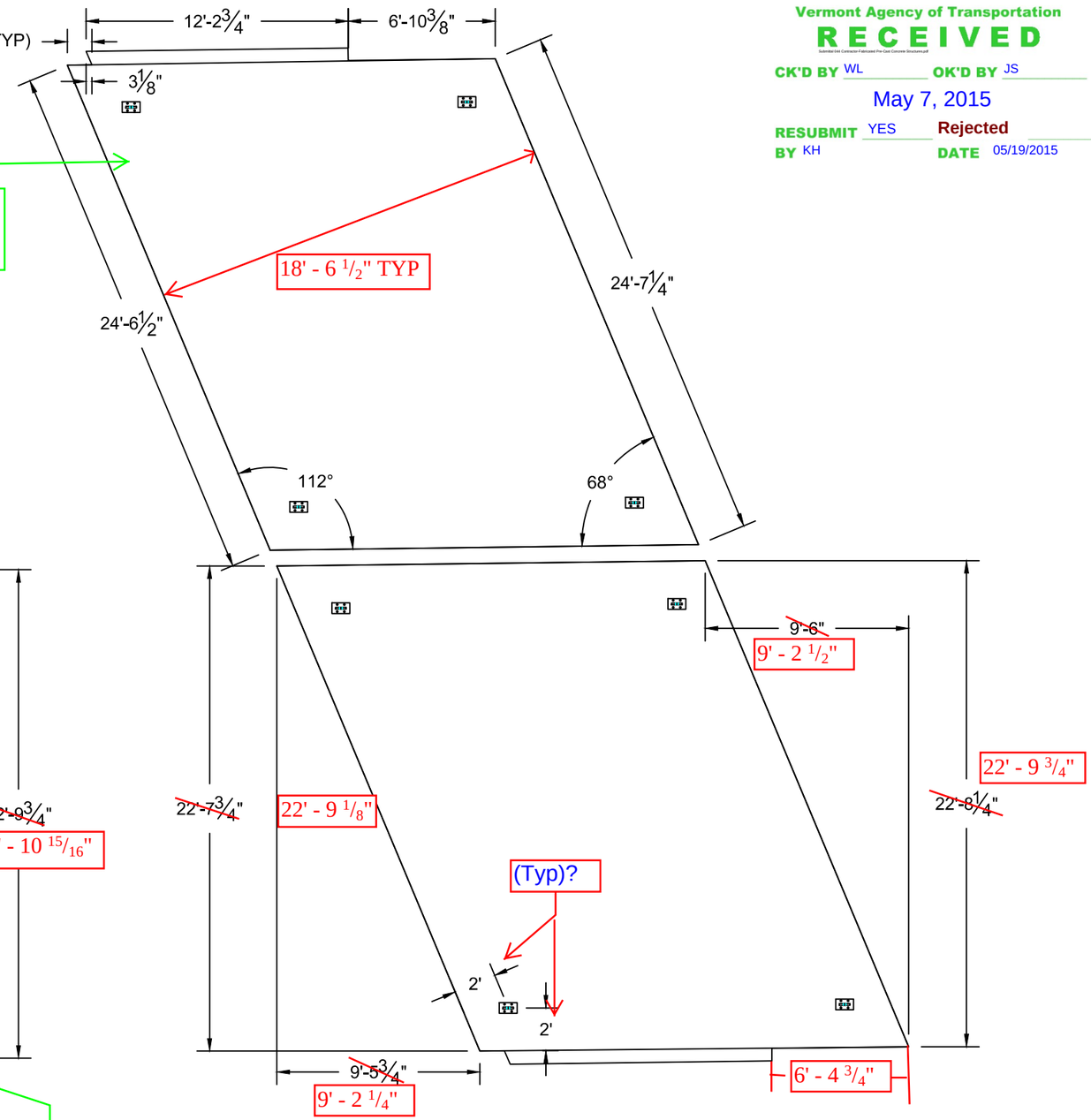

ABUTMENT 2 APPROACH SLABS

SEE CONTRACT PLANS FOR FURTHER DETAIL ON CURB AT BRIDGE RAIL INTERFACE

Revision No. & Date	Vermont Agency of Transportation			Drawing	Name	Date	PCL Civil Constructors, Inc. 3810 Northdale Blvd. Suite 200, Tampa Florida 33624 (813)-264-9500 ; Fax: (813)-264-6689	
				May 7 201	EWH	04/13/2015		
	Road No.	County / City	Financial Project ID No.	FOR CONSTRUCTION Design By	EWH	04/13/2015	Submittal APPROACH SLABS	PCL Project / Job No. I-91 Hartford / 5514001
	I-91	Hartford	IM 091-2(79)	Check By	TMD	05/05/2015	Drawing Title APPROACH SLABS 1 & 2	Sheet No. 5

STATE OF VERMONT TIMOTHY DAVIS NO. 97183 CIVIL LICENSED PROFESSIONAL ENGINEER

Vermont Agency of Transportation
RECEIVED
CK'D BY WL OK'D BY JS
May 7, 2015
RESUBMIT YES Rejected
BY KH DATE 05/19/2015

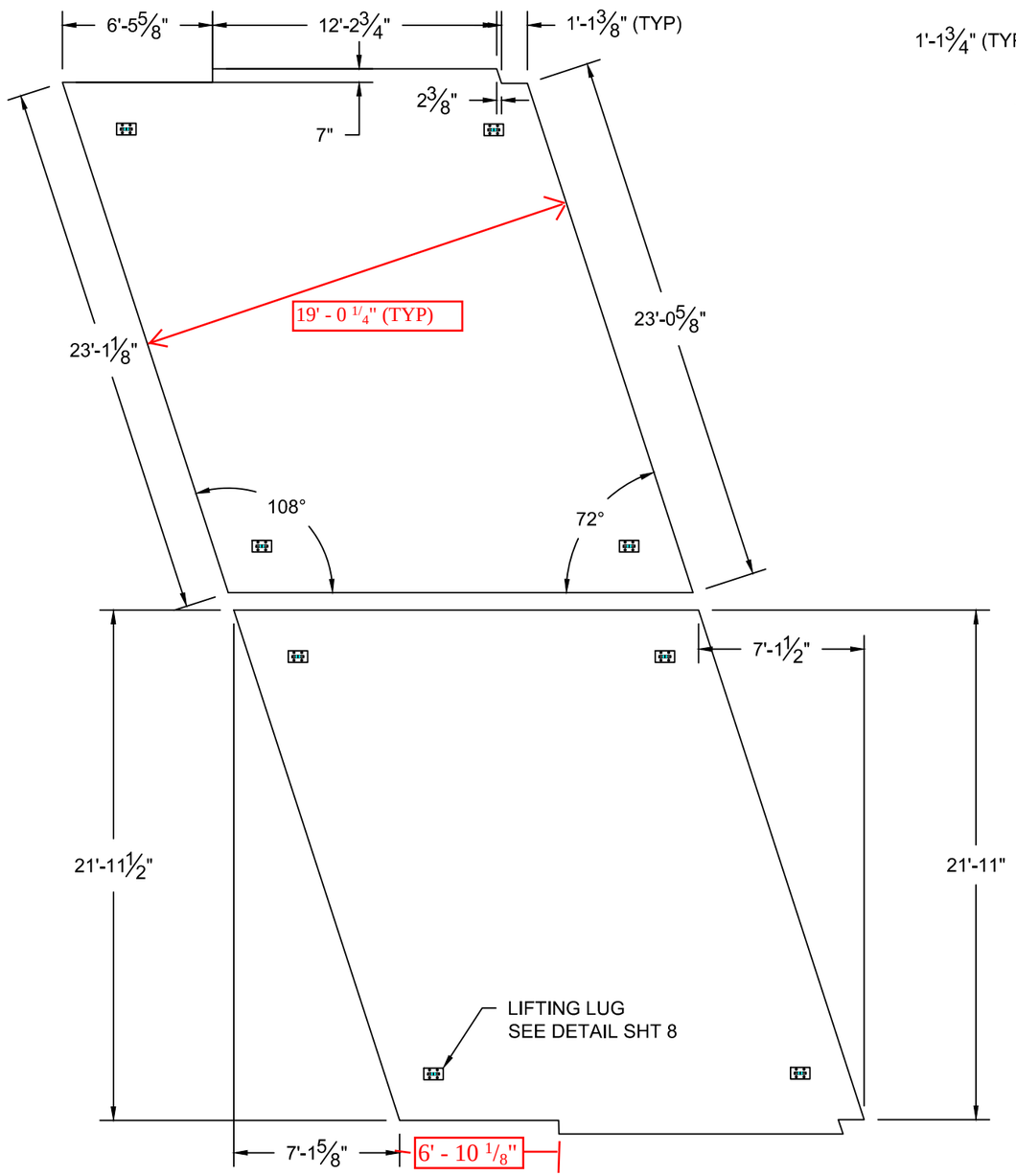

ABUTMENT 3 APPROACH SLABS

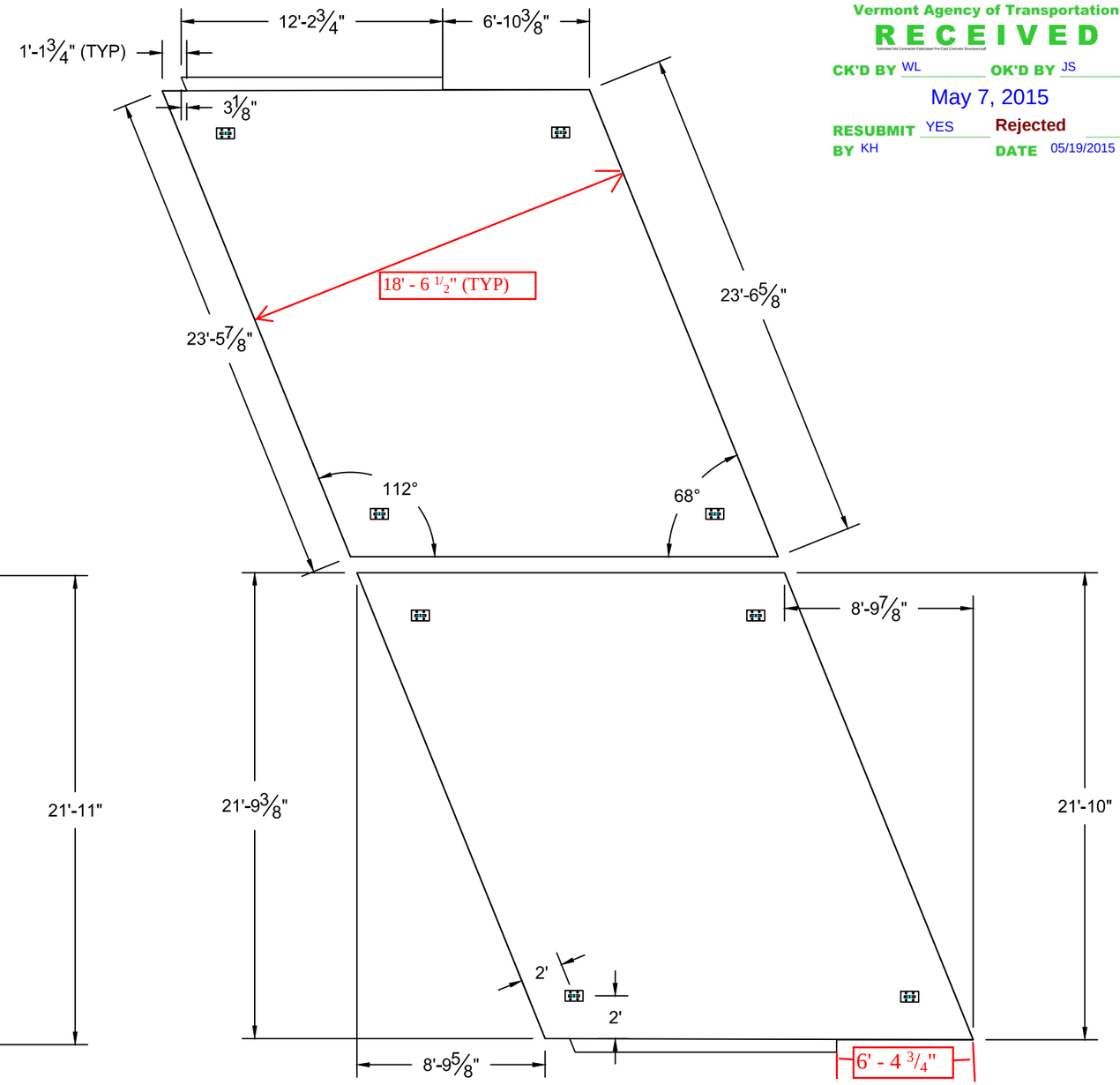

ABUTMENT 4 APPROACH SLABS

Revision No. & Date	Vermont Agency of Transportation				Drawing Status		Name	Date	PCL Civil Constructors, Inc. 3810 Northdale Blvd. Suite 200, Tampa Florida 33624 (813)-264-9500 ; Fax: (813)-264-6689	
				STATE OF VERMONT TIMOTHY DAVIS NO. 97183 CIVIL LICENSED PROFESSIONAL ENGINEER	May 7 2015 8:40 AM FOR CONSTRUCTION	Drawn By	EWH	04/13/2015		
	Road No.	County / City	Financial Project ID No.			Design By	EWH	04/13/2015	Submittal APPROACH SLABS	PCL Project / Job No. I-91 Hartford / 5514001
	I-91	Hartford	IM 091-2(79)			Check By	TMD	05/05/2015	Drawing Title APPROACH SLABS 3 & 4	Sheet No. 6

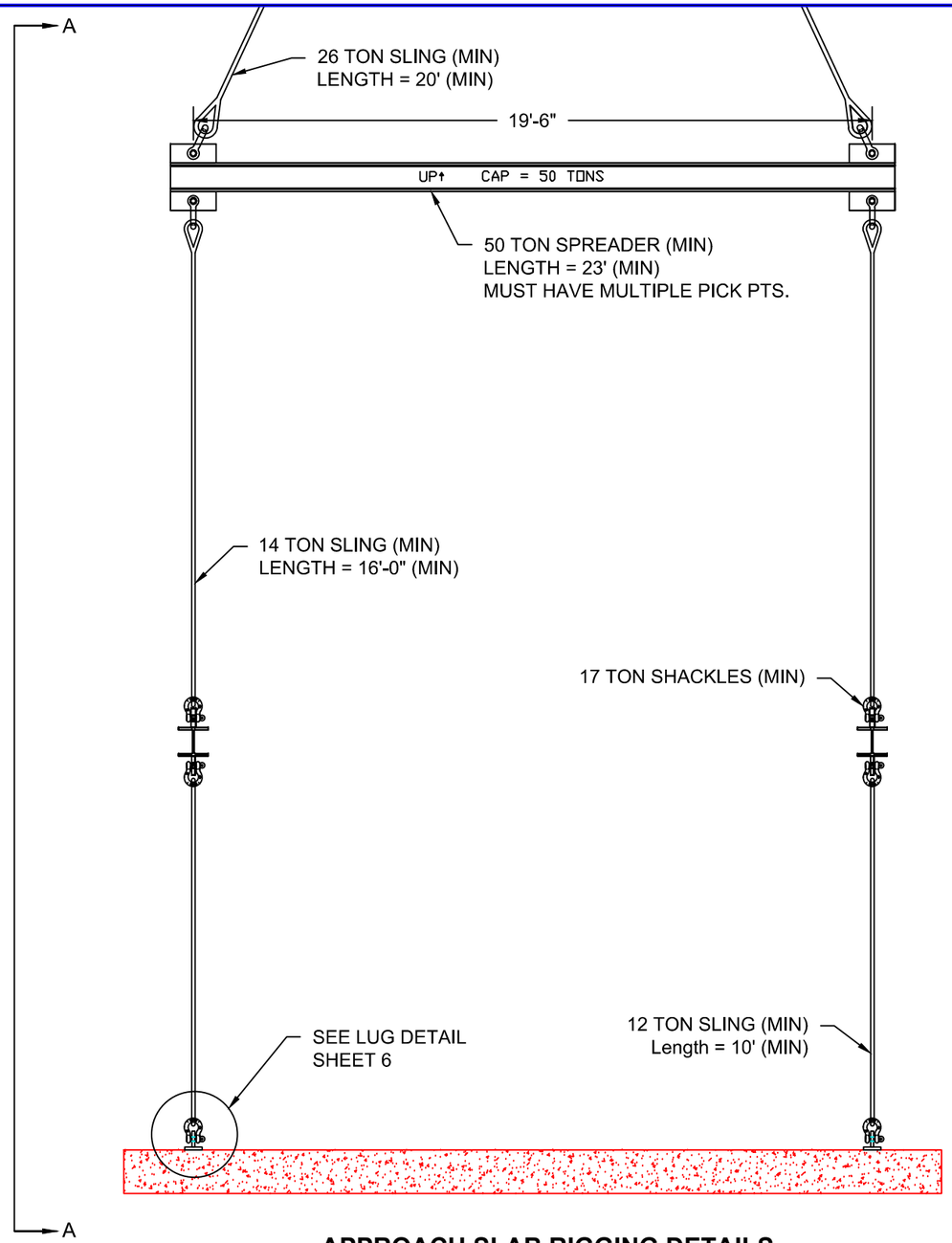

APPROACH SLAB RIGGING DETAILS

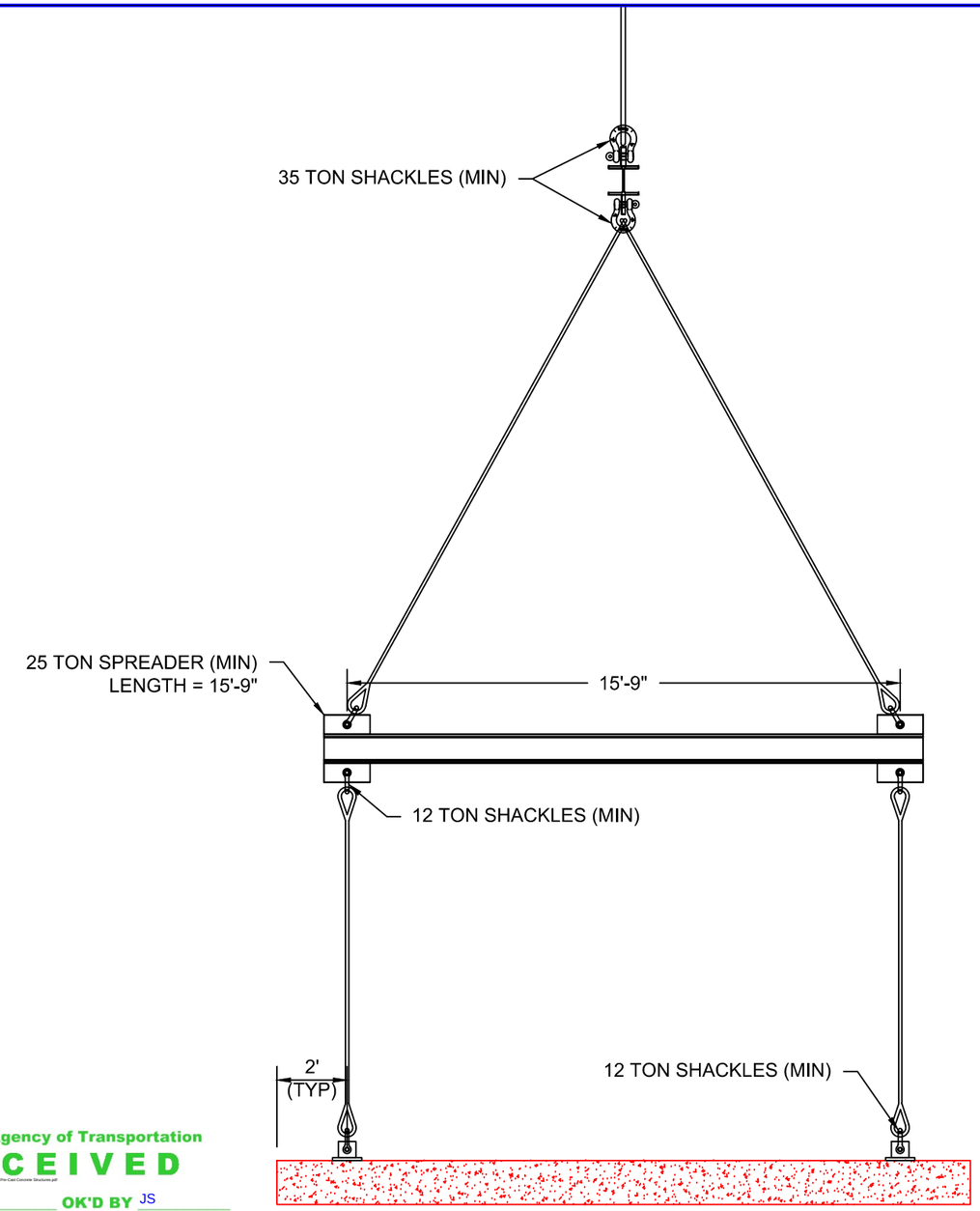

SECTION A-A

Vermont Agency of Transportation
RECEIVED
CK'D BY WL OK'D BY JS
May 7, 2015
RESUBMIT YES Rejected
BY KH DATE 05/19/2015

Revision No. & Date	Vermont Agency of Transportation				Drawing Status		Name	Date	PCL Civil Constructors, Inc. 3810 Northdale Blvd. Suite 200, Tampa Florida 33624 (813)-264-9500 ; Fax: (813)-264-6689	
				STATE OF VERMONT TIMOTHY DAVIS NO. 97183 CIVIL LICENSED PROFESSIONAL ENGINEER	May 7 2015 8:40 AM FOR CONSTRUCTION	Drawn By	EWH	04/13/2015		
	Road No.	County / City	Financial Project ID No.			Design By	EWH	04/13/2015	Submittal APPROACH SLABS	PCL Project / Job No. I-91 Hartford / 5514001
	I-91	Hartford	IM 091-2(79)			Check By	TMD	05/05/2015	Drawing Title RIGGING DETAILS	Sheet No. 7

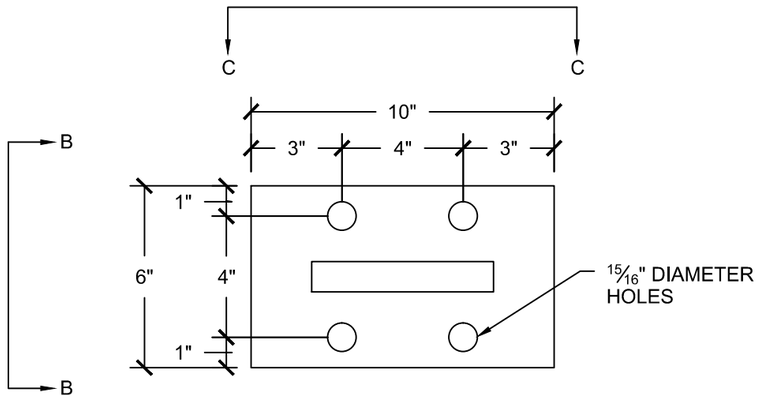

LUG PLAN

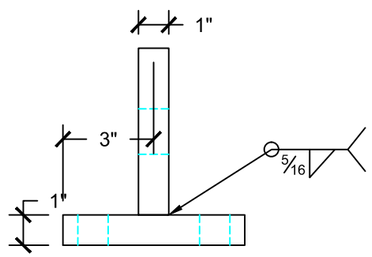

SECTION B-B

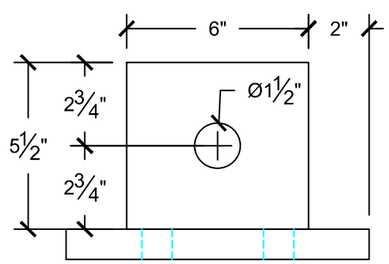

SECTION C-C

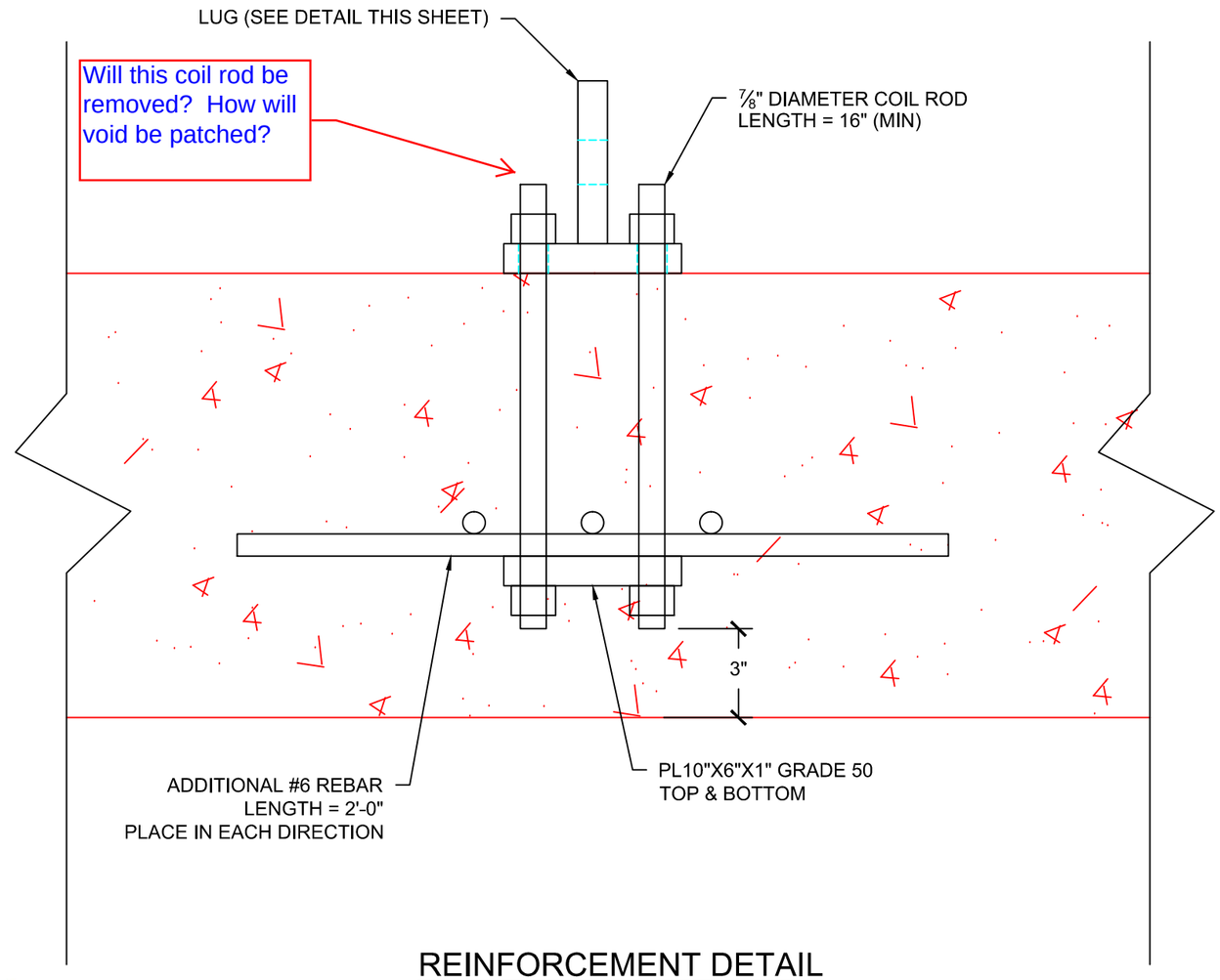

REINFORCEMENT DETAIL

Vermont Agency of Transportation
RECEIVED
CK'D BY WL OK'D BY JS
May 7, 2015
RESUBMIT YES Rejected
BY KH DATE 05/19/2015

Revision No. & Date	Vermont Agency of Transportation			Drawing Status		Name	Date	PCL Civil Constructors, Inc. 3810 Northdale Blvd. Suite 200, Tampa Florida 33624 (813)-264-9500 ; Fax: (813)-264-6689	
				May 7 2015 8:40 AM	Drawn By	EWH	04/13/2015		
	Road No.	County / City	Financial Project ID No.	FOR CONSTRUCTION	Design By	EWH	04/13/2015	Submittal APPROACH SLABS	PCL Project / Job No. I-91 Hartford / 5514001
	I-91	Hartford	IM 091-2(79)		Check By	TMD	05/05/2015	Drawing Title LIFTING LUG DETAILS	Sheet No. 8

STATE OF VERMONT TIMOTHY DAVIS NO. 97183 CIVIL LICENSED PROFESSIONAL ENGINEER