CONSTRUCTION LEADERS

LETTER OF TRANSMITTAL			
DATE:	**January 20, 2015**	PCL JOB NO:	**5515002**
ATTN:	**Kristin Higgins, P.E.**	TRANSMITTAL NO:	**002**

To: **State of Vermont Agency of Transportation**
One National Life Drive
Montpelier, VT 05633-5001
(802) 828-0053

Re: Hartford Lateral Slide
Project No.: IM 091-2(79)
Contract No.: TBD County: Windsor PCL FILE NO: 5515002-1

WE ARE SENDING **X** Attached ____ Under separate cover via **Email** the following:

X Shop drawings ____ Prints **X** Plans ____ Samples ____ Specifications

____ Copy of Letter ____ Change Order ____ Other

COPIES	SPEC.	REVISION	DESCRIPTION
1	**506-01**		**Structural Steel Shop Drawings & Welding Procedures**

TRANSMITTED for as checked below:

X For approval ____ Approved as submitted ____ Resubmit **1** Copies for approval

____ For your use ____ Approved as noted ____ Submit ____ Copies for distribution

____ As requested ____ Returned for corrections ____ Return ____ Corrected prints

____ For review and comment

Remarks:

Please return an email of this approved submittal to Erich Heymann (ewheymann@pcl.com) and Jeremy Mackling (jmackling@pcl.com).

We request the review and return of this submittal within 7 days. As aware the structural steel is a long lead item and it critical to the construction schedule. Please advise if this request cannot be met so we can plan accordingly.

By: **Erich Heymann,** Project Engineer

COPY TO: Project Files

3810 Northdale Blvd., Suite 200; Tampa, FL • (813) 264-9500 • (813) 264-6689 (fax)

CONSTRUCTION LEADERS

SUBMITTAL NO. : 003
Structural Steel Shop Drawings & Welding Procedure

Item No.	Specification	Description
1	506-01	Structural Steel Shop Drawings & Welding Procedure

PROJECT:
HARTFORD LATERAL SLIDE
PROJECT NO.: IM 091-2(79)
CONTRACT NO.: TBD

OWNER:
STATE OF VERMONT AGENCY OF TRANSPORTATION

ENGINEER OF RECORD:
STATE OF VERMONT AGENCY OF TRANSPORTATION

CONTRACTOR:
PCL CIVIL CONSTRUCTORS, INC.

JANUARY 20, 2015

3810 Northdale Blvd., Suite 200; Tampa, FL • (813) 264-9500 • (813) 264-6689 (fax)

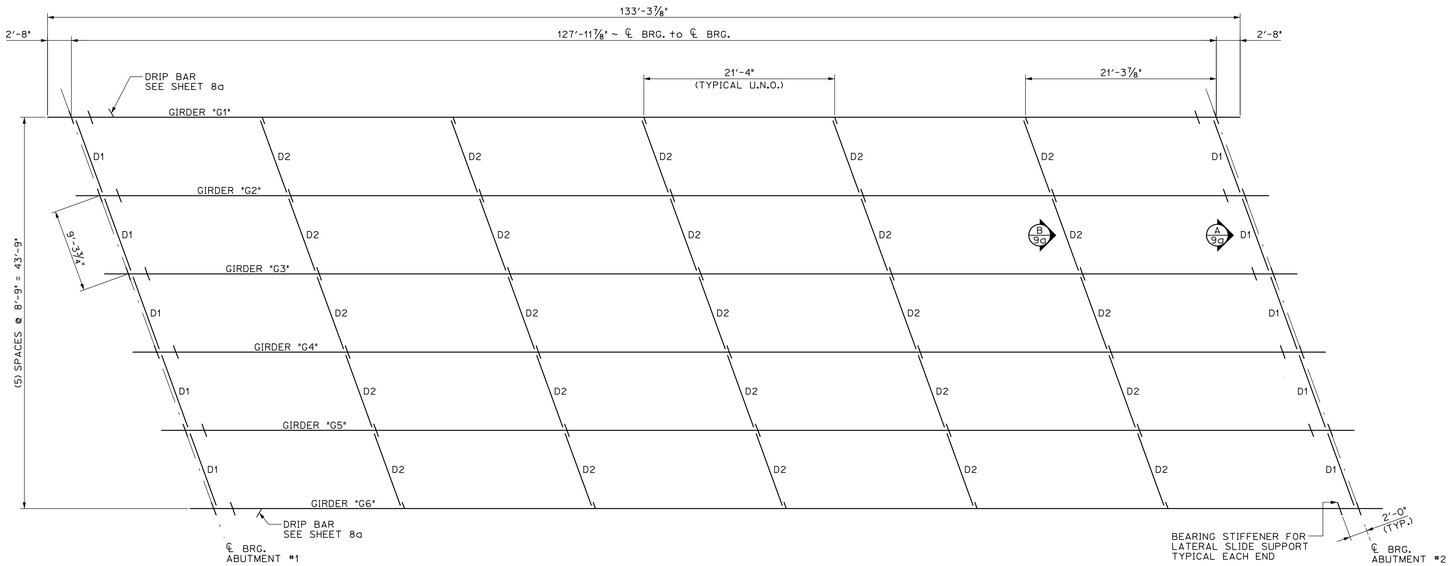

SOUTHBOUND FRAMING PLAN (BRIDGE 43S)

SCALE: ⅛" = 1'-0"

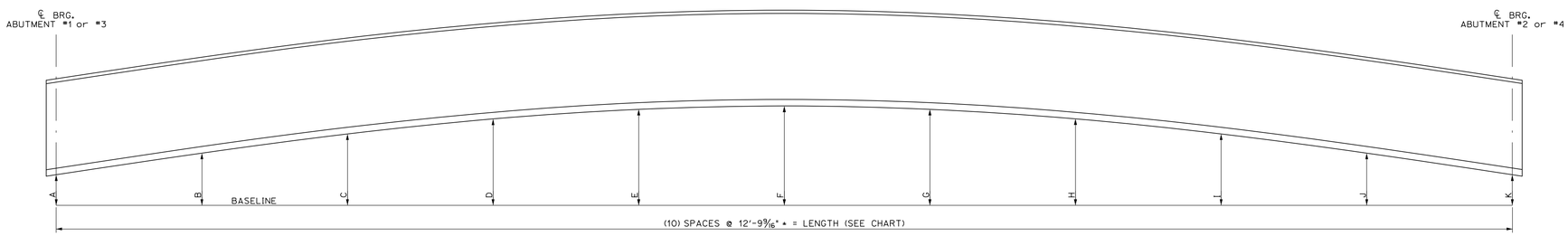

BLOCKING DIAGRAM ~ SEE CHART

ALL DIMENSIONS ARE TO THE OUTSIDE OF BOTTOM FLANGES
NOT TO SCALE

GIRDER LINE	LENGTH	ABUT. 1 ℄ BRG. "A"	"B"	"C"	"D"	"E"	"F"	"G"	"H"	"I"	"J"	ABUT. 2 ℄ BRG. "K"
SOUTHBOUND GIRDERS BRIDGE 43S	127'-11⅞"	6"	9"	11 11/16"	13¾"	15⅛"	15½"	15⅛"	13¾"	11 11/16"	9"	6"
NORTHBOUND GIRDER BRIDGE 43N	127'-11 13/16"	6"	10 5/16"	14"	17"	18⅞"	19½"	18⅞"	17"	14"	10 5/16"	6"

GENERAL FABRICATION NOTES

MATERIAL SPECIFICATIONS

1.) ALL MATERIAL SHALL BE ASTM A709 GRADE 50W (UNO).
THE BOTTOM FLANGES OF THE GIRDERS FOR BRIDGE 43N SHALL CONFORM TO ASTM A709 HPS 70W.

2.) ALL A709 GRADE 50 MATERIAL DENOTED "CVN" SHALL MEET THE CHARPY V-NOTCH TESTING REQUIREMENTS OF ZONE 2, H FREQUENCY: 15 FT-LB AT 40° (UP TO 2" WELDED)

ITEMS SHALL CALL OUT "CVN" FOR EACH APPLICABLE ITEM IN THE BILL OF MATERIALS

3.) BOLTS SHALL BE HIGH STRENGTH BOLTS ASTM A325, TYPE 3
NUTS SHALL BE A563 GRADE C3 OR DH3
WASHERS SHALL BE ASTM F436, TYPE 3

BOLTS AND NUTS SHALL BE ROTATIONAL CAPACITY TESTED. DO NOT MIX NUTS AND BOLTS FROM DIFFERENT CONTAINERS UNLESS ALL NUTS AND BOLTS HAVE THE SAME LOT NUMBER.

FABRICATION

1.) DIE STAMPING IS ALLOWED IN SPECIFIC LOCATIONS WITH THE APPROVAL OF THE ENGINEER.

2.) ALL EDGES OF FLAME CUT MATERIAL SUBJECTED TO CALCULATED STRESSES SHALL BE ROUNDED TO A MINIMUM RADIUS OF 1/16", OR AN EQUIVALENT FLAT SURFACE AT A SUITABLE ANGLE.

3.) ALL PLATES, FLAME CUT FROM LARGER PLATES, SHALL BE CUT SO THAT THE PRIMARY DIRECTION OF ROLLING IS PARALLEL TO THE MAIN TENSILE OR COMPRESSIVE STRESS. STANDARD SPEC. 504.18, DECEMBER, 2002.

4.) FLANGE PLATE MATERIAL, SHALL HAVE AN EDGE HARDNESS HRc 30 AVERAGE AND MAX SINGLE HRc 35, ALLOWED STANDARD SPEC 504.22

WELDING

1.) ALL WELDING PROCEDURES SHALL BE IN ACCORDANCE WITH THE PROVISIONS OF SUBSECTION 506.10.

2.) NON DESTRUCTIVE TESTING OF WELDS SHALL BE IN ACCORDANCE WITH ANSI/AASHTO/AWS D1.5 – SECTION 6. FLANGE WELDS WILL BE CALLED OUT AS BEING IN EITHER COMPRESSION OR TENSION. WEB WELDS WILL LABEL EITHER TOP OR BOTTOM AS BEING IN COMPRESSION, OR BE LABELED AS BEING IN A STRESS REVERSAL AREA.

FLANGE SPLICES SHALL BE TESTED AS FOLLOWS:
FLANGE SPLICES IN TENSION ~ TESTED 100%
FLANGE SPLICES IN STRESS REVERSAL AREAS ~ TESTED 100%
FLANGE SPLICES IN COMPRESSION ~ TESTED 25%

WEB SPLICES SHALL BE TESTED AS FOLLOWS:
FOR 1/6 THE DEPTH OF THE WEB (TENSION AREA) ~ TESTED 100%
FOR THE REMAINING DEPTH OF WEB (COMPRESSION AREA) ~ TESTED 25 %

FOR 1/6 DEPTH OF THE WEB @ TOP & BTM. (STRESS REVERSAL) ~ TESTED 100%
THE REMAINING 2/3 OF THE WEB ~ TESTED 25%

3.) TERMINATE STIFFENER WELDS AS SHOWN IN THE "WELD TERMINATION DETAIL" ON SHEET M1.

FIELD CONNECTIONS

1.) FIELD BOLTS SHALL HAVE A HEAVY HEX NUT, HEX HEAD, AND ONE HARD WASHER EACH.

2.) PIECE MARKS WILL BE LOCATED AS SHOWN ON ERECTION DRAWINGS. ALL ERECTION MARKS, MATCH MARKS, AND WEIGHT MARKS MUST NOT BE EXPOSED IN THE FINISHED STRUCTURE.

3.) HARDENED WASHERS ARE REQUIRED OVER OVERSIZED HOLES.

CLEANING AND PAINTING

1.) UNPAINTED STEEL SHALL BE BLAST CLEANED TO SSPC SP-6 TO ACHIEVE A UNIFORM WEATEHERED APPEARANCE.

PROJECT No. IM 091-2(79)
ITEM No. 506.55

FINISH	N/A				
MATERIAL	SEE DETAIL SHEETS				
HOLES					
ELECTRODES	PER WELD PROCEDURE				
WELDS	PER WELD PROCEDURE				
SURFACE PREP					
		NO	DATE	DESCRIPTION	BY

REVISIONS

ARC ENTERPRISES, INC.
ADVANCED RESOURCES & CONST. ENTERPRISES, INCORPORATED
P.O. BOX 120 KINGFIELD, ME. 04947
PHONE: (207) 265-2646 – FAX: (207) 265-4054

DRAFTER	JJH	SOUTHBOUND FRAMING PLAN	PROJECT NO. 14-180
DATE	JAN. 2015	HARTFORD, VT I-91 SB OVER US RTE 5 PROJECT NUMBER IM 091-2(79)	
CHECKED	GNM	SC: PCL CIVIL CONSTRUCTORS	DWG. NO. 1a
DATE	JAN. 2015		

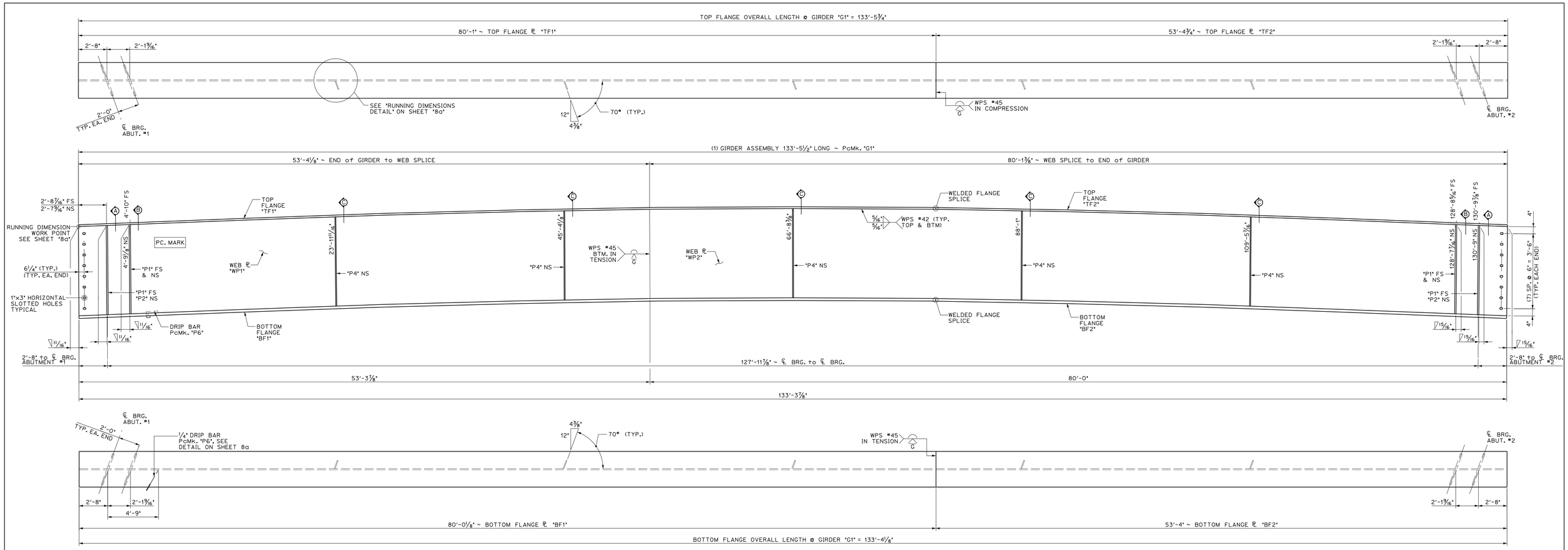

1 / 2a DIMENSIONAL PLANS & ELEVATIONS ~ GIRDER "G1"
HORIZONTAL SCALE: ¼" = 1'-0"
VERTICAL SCALE EXAGGERATED 2:1

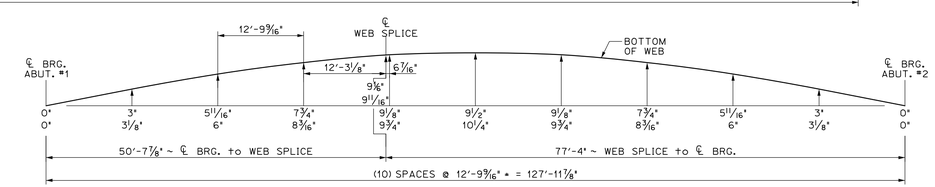

GIRDER "G1" CAMBER

THE TWO CAMBER DIMENSIONS SHOWN REPRESENT THE FOLLOWING:
TOP DIMENSION ~ TOTAL CAMBER IN FINISHED BEAM IN A NO-LOAD POSITION
BTM. DIMENSION ~ TOTAL CAMBER IN BEAM @ TIME OF FABRICATION

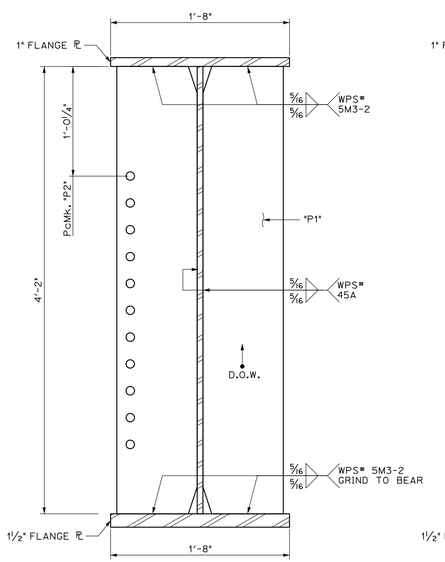

A / 2a DIMENSIONAL SECTION
SCALE: 1½" = 1'-0"

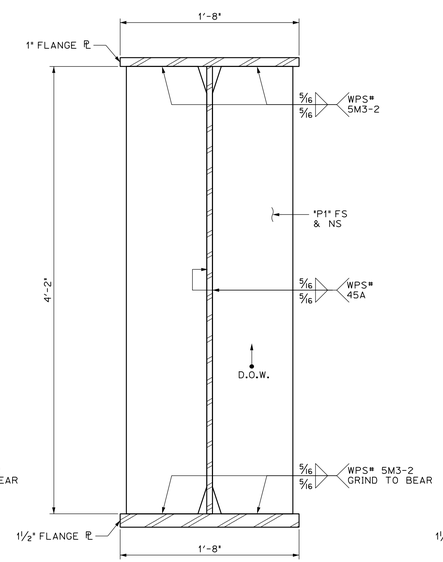

B / 2a DIMENSIONAL SECTION
SCALE: 1½" = 1'-0"

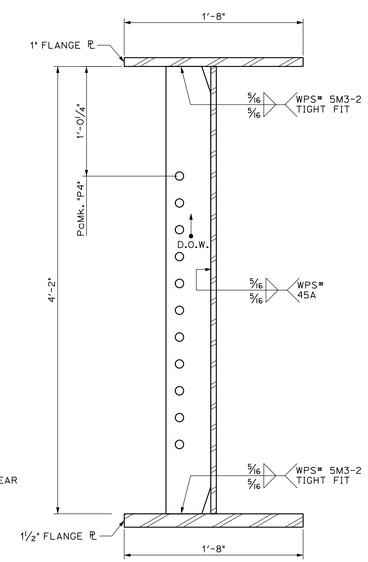

C / 2a DIMENSIONAL SECTION
SCALE: 1½" = 1'-0"

BILL OF MATERIALS

SHIP	SHIP MARK	NO. PCS.	PIECE MARK	DESCRIPTION	LENGTH	REMARKS	MAT'L	
1	G1			BRIDGE GIRDER ASSEMBLY	133'-5½"	38,100#		
		1	WP1	℞ ⅝" × 50"	53'-4¼"	5700#	CVN	
		1	WP2	℞ ⅝" × 50"	80'-1⅜"	8550#	CVN	
		1	TF1	℞ 1" × 20"	80'-1"	5475#	CVN	
		1	TF2	℞ 1" × 20	53'-4¾"	3650#	CVN	
		1	BF1	℞ 1½" × 20"	80'-0⅛"	8200#	CVN	
		1	BF2	℞ 1½" × 20"	53'-4"	5450#	CVN	
		6	P1	SEE SHEET M1				
		2	P2	SEE SHEET M1				
		5	P4	SEE SHEET M1				
		1	P6	℞ ¼" × 3½" DRIP BAR				

PROJECT No. IM 091-2(79)
ITEM No. 506.55

FINISH	SSPC SP6			
MATERIAL	AASHTO M270 (ASTM A709) GRADE 50W			
HOLES	15/16 " Ø U.N.O.			
ELECTRODES	PER WELD PROCEDURE			
WELDS	PER WELD PROCEDURE			
SURFACE PREP	SSPC SP6			
	NO	DATE	DESCRIPTION	BY

REVISIONS

ARC ENTERPRISES, INC.

ADVANCED RESOURCES & CONST. ENTERPRISES, INCORPORATED
P.O. BOX 120 KINGFIELD, ME. 04947
PHONE: (207) 265-2646 – FAX: (207) 265-4054

DRAFTER	JJH	SOUTHBOUND GIRDER "G1"	PROJECT NO. 14-180
DATE	JAN. 2015	HARTFORD, VT I-91 SB OVER US RTE 5 PROJECT NUMBER IM 091-2(79)	DWG. NO. 2a
CHECKED	GNM		
DATE	JAN. 2015	PCL CIVIL CONSTRUCTORS	

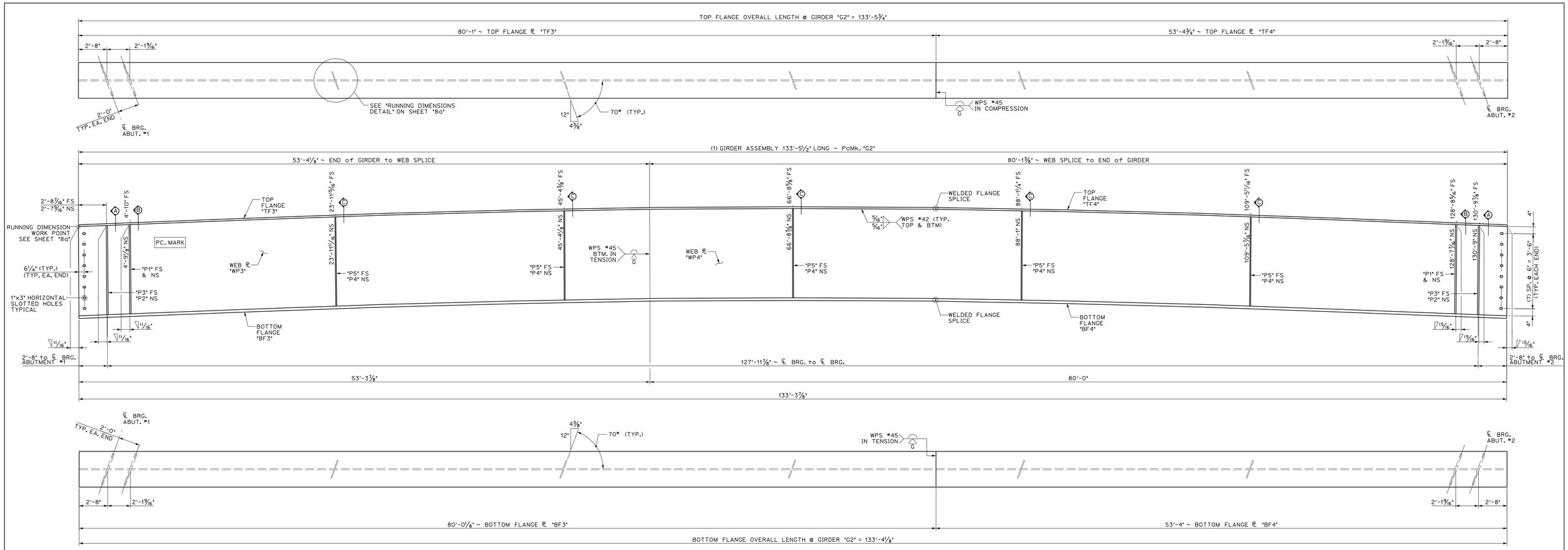

1/3a DIMENSIONAL PLANS & ELEVATIONS ~ GIRDER "G2"
HORIZONTAL SCALE: ¼" = 1'-0"
VERTICAL SCALE EXAGGERATED 2:1

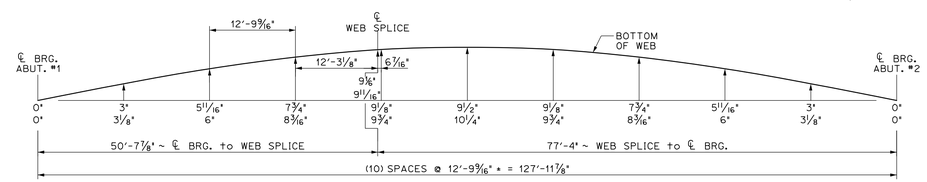

GIRDER "G2" CAMBER

THE TWO CAMBER DIMENSIONS SHOWN REPRESENT THE FOLLOWING:
TOP DIMENSION ~ TOTAL CAMBER IN FINISHED BEAM IN A NO-LOAD POSITION
BTM. DIMENSION ~ TOTAL CAMBER IN BEAM @ TIME OF FABRICATION

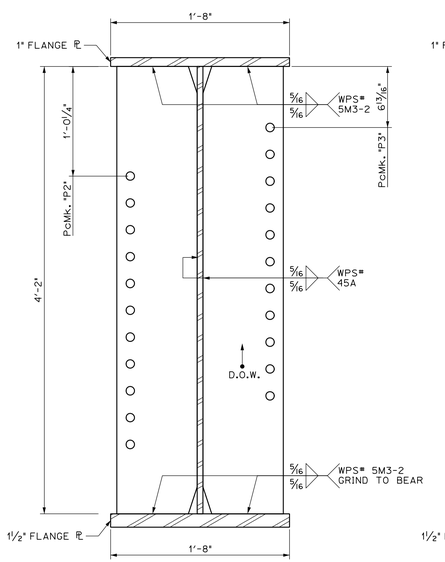

A/3a DIMENSIONAL SECTION
SCALE: 1½" = 1'-0"

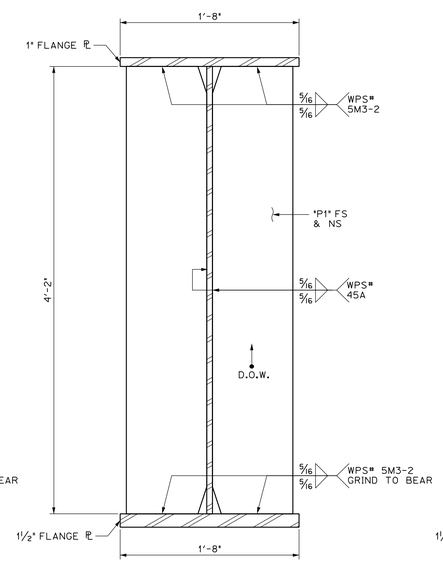

B/3a DIMENSIONAL SECTION
SCALE: 1½" = 1'-0"

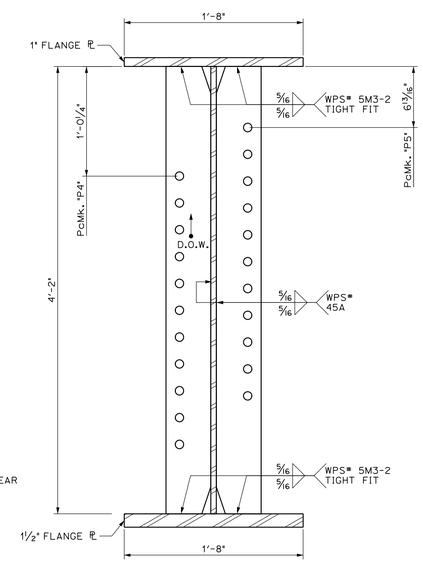

C/3a DIMENSIONAL SECTION
SCALE: 1½" = 1'-0"

BILL OF MATERIALS

SHIP	SHIP MARK	NO. PCS.	PIECE MARK	DESCRIPTION	LENGTH	REMARKS	MAT'L	
1	G2			BRIDGE GIRDER ASSEMBLY	133'-5½"	38,225#		
		1	WP3	ℙ ⅝" × 50"	53'-4¼"	5700#	CVN	
		1	WP4	ℙ ⅝" × 50"	80'-1⅜"	8550#	CVN	
		1	TF3	ℙ 1" × 20"	80'-1"	5475#	CVN	
		1	TF4	ℙ 1" × 20	53'-4¾"	3650#	CVN	
		1	BF3	ℙ 1½" × 20"	80'-0⅛"	8200#	CVN	
		1	BF4	ℙ 1½" × 20"	53'-4"	5450#	CVN	
		4	P1	SEE SHEET M1				
		2	P2	SEE SHEET M1				
		2	P3	SEE SHEET M1				
		5	P4	SEE SHEET M1				
		5	P5	SEE SHEET M1				

PROJECT No. IM 091-2(79)
ITEM No. 506.55

FINISH SSPC SP6				
MATERIAL AASHTO M270 (ASTM A709) GRADE 50W				
HOLES 15/16 " Ø U.N.O.				
ELECTRODES PER WELD PROCEDURE				
WELDS PER WELD PROCEDURE				
SURFACE PREP SSPC SP6				
	NO	DATE	DESCRIPTION	BY

REVISIONS

ARC ENTERPRISES, INC.

ADVANCED RESOURCES & CONST. ENTERPRISES, INCORPORATED
P.O. BOX 120 KINGFIELD, ME. 04947
PHONE: (207) 265-2646 – FAX: (207) 265-4054

DRAFTER JJH	SOUTHBOUND GIRDER "G2"		PROJECT NO. 14-180
DATE JAN. 2015	HARTFORD, VT I-91 SB OVER US RTE 5 PROJECT NUMBER IM 091-2(79)		
CHECKED GNM			DWG. NO. 3a
DATE JAN. 2015	PCL CIVIL CONSTRUCTORS		

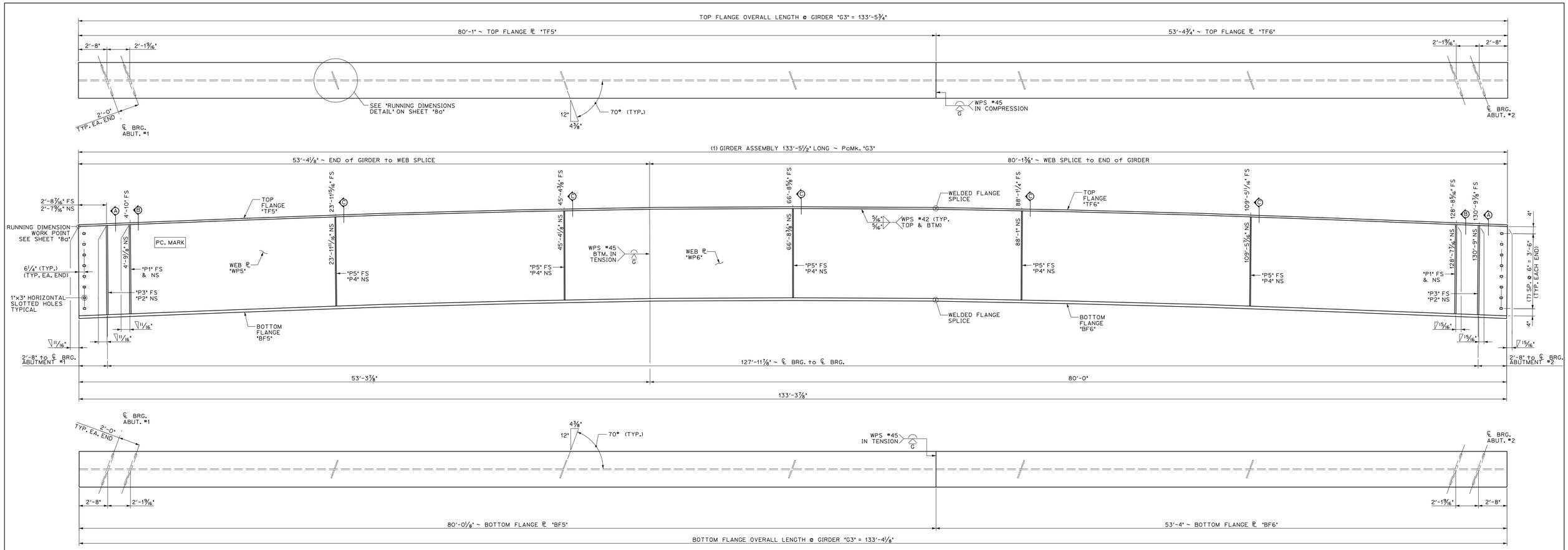

1 / 4a DIMENSIONAL PLANS & ELEVATIONS ~ GIRDER "G3"
HORIZONTAL SCALE: ¼" = 1'-0"
VERTICAL SCALE EXAGGERATED 2:1

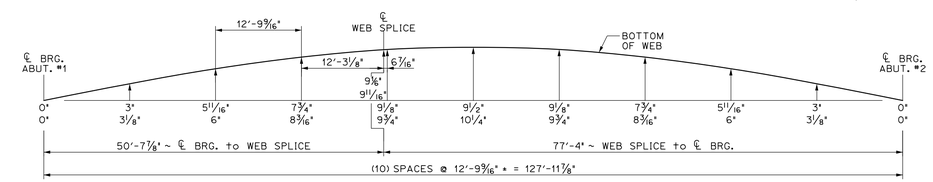

GIRDER "G3" CAMBER

THE TWO CAMBER DIMENSIONS SHOWN REPRESENT THE FOLLOWING:
TOP DIMENSION ~ TOTAL CAMBER IN FINISHED BEAM IN A NO-LOAD POSITION
BTM. DIMENSION ~ TOTAL CAMBER IN BEAM @ TIME OF FABRICATION

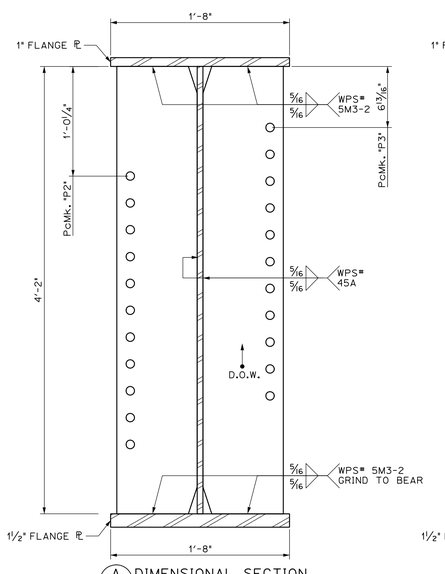

A / 4a DIMENSIONAL SECTION
SCALE: 1½" = 1'-0"

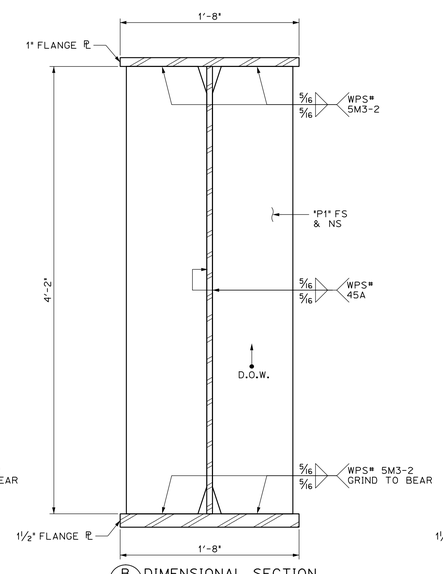

B / 4a DIMENSIONAL SECTION
SCALE: 1½" = 1'-0"

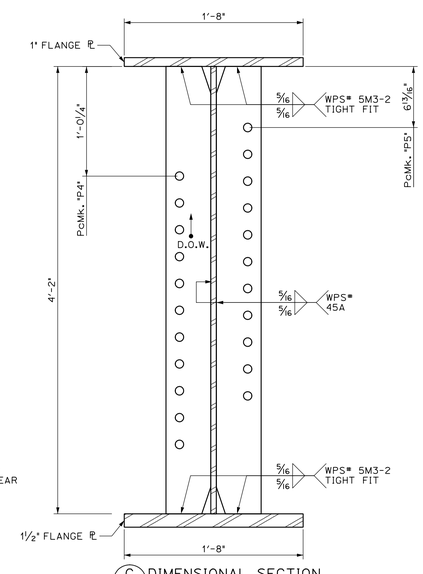

C / 4a DIMENSIONAL SECTION
SCALE: 1½" = 1'-0"

BILL OF MATERIALS

SHIP	SHIP MARK	NO. PCS.	PIECE MARK	DESCRIPTION	LENGTH	REMARKS	MAT'L	
1	G3			BRIDGE GIRDER ASSEMBLY	133'-5½"	38,225#		
		1	WP5	ℙ ⅝" × 50"	53'-4¼"	5700#	CVN	
		1	WP6	ℙ ⅝" × 50"	80'-1⅜"	8550#	CVN	
		1	TF5	ℙ 1" × 20"	80'-1"	5475#	CVN	
		1	TF6	ℙ 1" × 20	53'-4¾"	3650#	CVN	
		1	BF5	ℙ 1½" × 20"	80'-0⅛"	8200#	CVN	
		1	BF6	ℙ 1½" × 20"	53'-4"	5450#	CVN	
		4	P1	SEE SHEET M1				
		2	P2	SEE SHEET M1				
		2	P3	SEE SHEET M1				
		5	P4	SEE SHEET M1				
		5	P5	SEE SHEET M1				

PROJECT No. IM 091-2(79)
ITEM No. 506.55

FINISH	SSPC SP6			
MATERIAL	AASHTO M270 (ASTM A709) GRADE 50W			
HOLES	15/16 " Ø U.N.O.			
ELECTRODES	PER WELD PROCEDURE			
WELDS	PER WELD PROCEDURE			
SURFACE PREP	SSPC SP6			
	NO	DATE	DESCRIPTION	BY

REVISIONS

ARC ENTERPRISES, INC.

ADVANCED RESOURCES & CONST. ENTERPRISES, INCORPORATED
P.O. BOX 120 KINGFIELD, ME. 04947
PHONE: (207) 265-2646 – FAX: (207) 265-4054

DRAFTER	JJH	SOUTHBOUND GIRDER "G3"	PROJECT NO. 14-180
DATE	JAN. 2015	HARTFORD, VT I-91 SB OVER US RTE 5 PROJECT NUMBER IM 091-2(79)	DWG. NO. 4a
CHECKED	GNM		
DATE	JAN. 2015	PCL CIVIL CONSTRUCTORS	

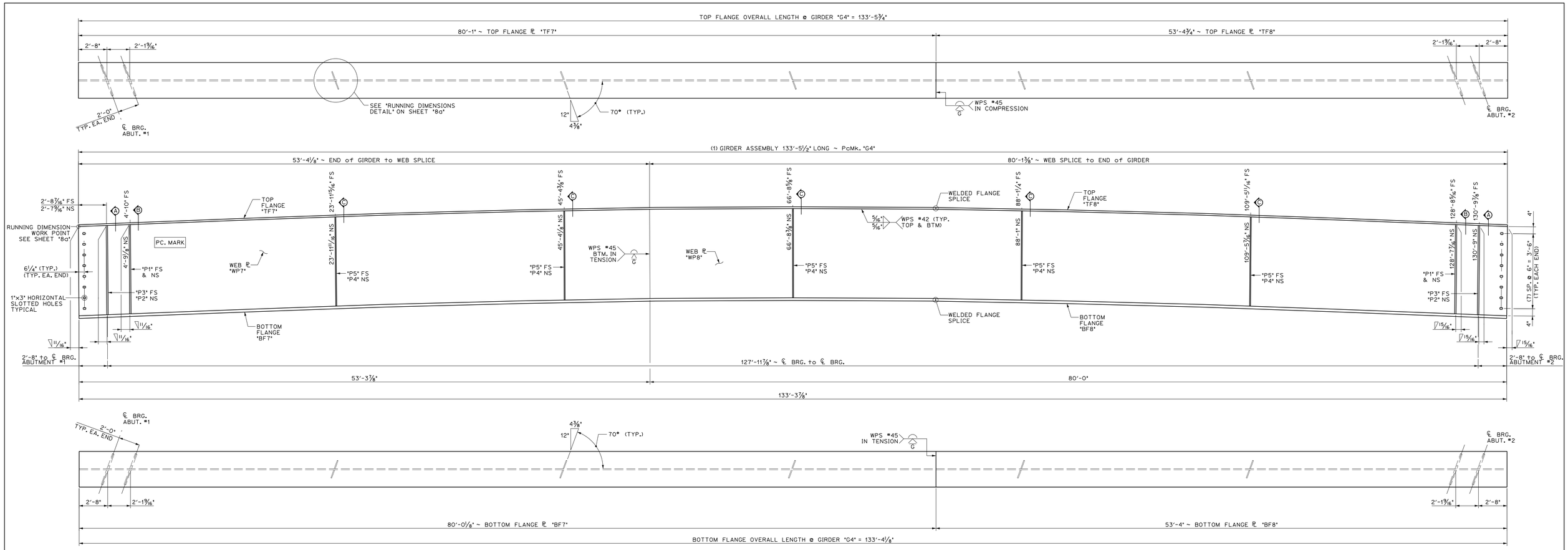

1/5a DIMENSIONAL PLANS & ELEVATIONS ~ GIRDER "G4"
HORIZONTAL SCALE: ¼" = 1'-0"
VERTICAL SCALE EXAGGERATED 2:1

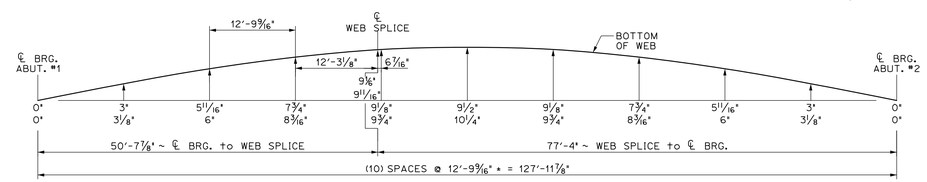

GIRDER "G4" CAMBER

THE TWO CAMBER DIMENSIONS SHOWN REPRESENT THE FOLLOWING:
TOP DIMENSION ~ TOTAL CAMBER IN FINISHED BEAM IN A NO-LOAD POSITION
BTM. DIMENSION ~ TOTAL CAMBER IN BEAM @ TIME OF FABRICATION

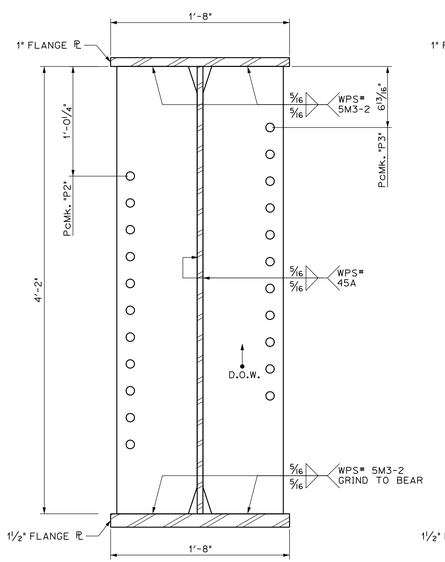

A/5a DIMENSIONAL SECTION
SCALE: 1½" = 1'-0"

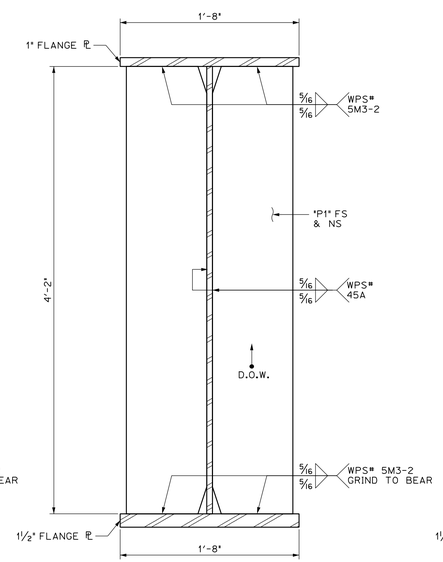

B/5a DIMENSIONAL SECTION
SCALE: 1½" = 1'-0"

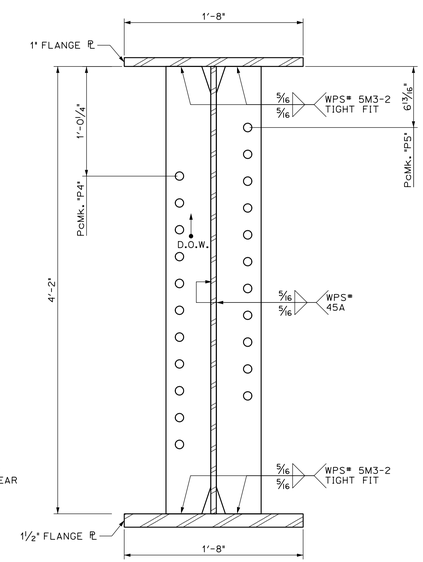

C/5a DIMENSIONAL SECTION
SCALE: 1½" = 1'-0"

BILL OF MATERIALS

SHIP	SHIP MARK	NO. PCS.	PIECE MARK	DESCRIPTION	LENGTH	REMARKS	MAT'L	
1	G4			BRIDGE GIRDER ASSEMBLY	133'-5½"	38,225#		
		1	WP7	℞ ⅝" × 50"	53'-4¼"	5700#	CVN	
		1	WP8	℞ ⅝" × 50"	80'-1⅜"	8550#	CVN	
		1	TF7	℞ 1" × 20"	80'-1"	5475#	CVN	
		1	TF8	℞ 1" × 20	53'-4¾"	3650#	CVN	
		1	BF7	℞ 1½" × 20"	80'-0⅛"	8200#	CVN	
		1	BF8	℞ 1½" × 20"	53'-4"	5450#	CVN	
		4	P1	SEE SHEET M1				
		2	P2	SEE SHEET M1				
		2	P3	SEE SHEET M1				
		5	P4	SEE SHEET M1				
		5	P5	SEE SHEET M1				

PROJECT No. IM 091-2(79)
ITEM No. 506.55

FINISH SSPC SP6				
MATERIAL AASHTO M270 (ASTM A709) GRADE 50W				
HOLES 15/16 " Ø U.N.O.				
ELECTRODES PER WELD PROCEDURE				
WELDS PER WELD PROCEDURE				
SURFACE PREP SSPC SP6				
	NO	DATE	DESCRIPTION	BY

REVISIONS

ARC ENTERPRISES, INC.

ADVANCED RESOURCES & CONST. ENTERPRISES, INCORPORATED
P.O. BOX 120 KINGFIELD, ME. 04947
PHONE: (207) 265-2646 – FAX: (207) 265-4054

DRAFTER JJH	SOUTHBOUND GIRDER "G4"		PROJECT NO. 14-180
DATE JAN. 2015	HARTFORD, VT I-91 SB OVER US RTE 5 PROJECT NUMBER IM 091-2(79)		
CHECKED GNM			DWG. NO. 5a
DATE JAN. 2015	PCL CIVIL CONSTRUCTORS		

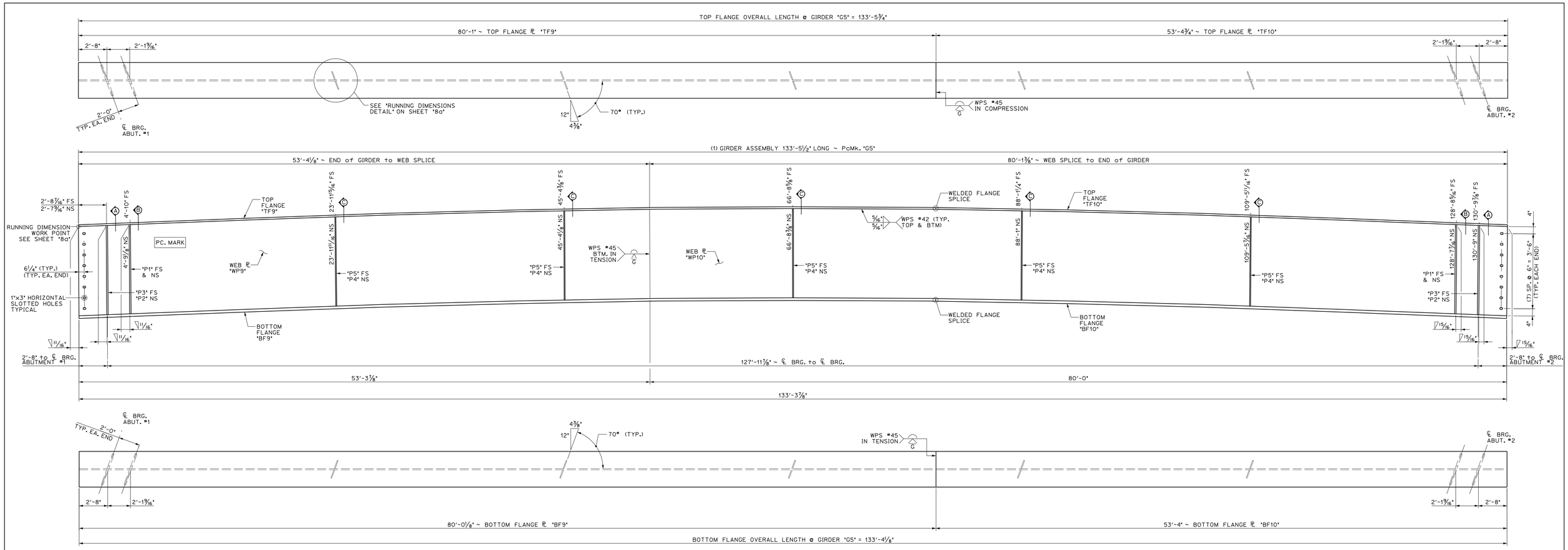

1/6a DIMENSIONAL PLANS & ELEVATIONS ~ GIRDER "G5"
HORIZONTAL SCALE: ¼" = 1'-0"
VERTICAL SCALE EXAGGERATED 2:1

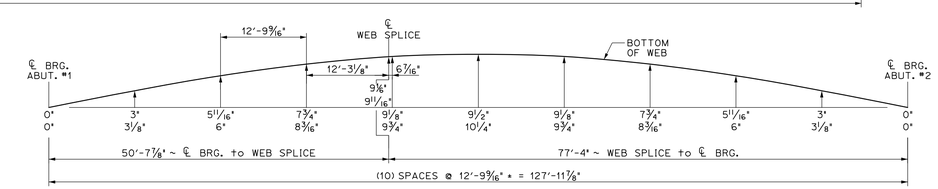

GIRDER "G5" CAMBER

THE TWO CAMBER DIMENSIONS SHOWN REPRESENT THE FOLLOWING:
TOP DIMENSION ~ TOTAL CAMBER IN FINISHED BEAM IN A NO-LOAD POSITION
BTM. DIMENSION ~ TOTAL CAMBER IN BEAM @ TIME OF FABRICATION

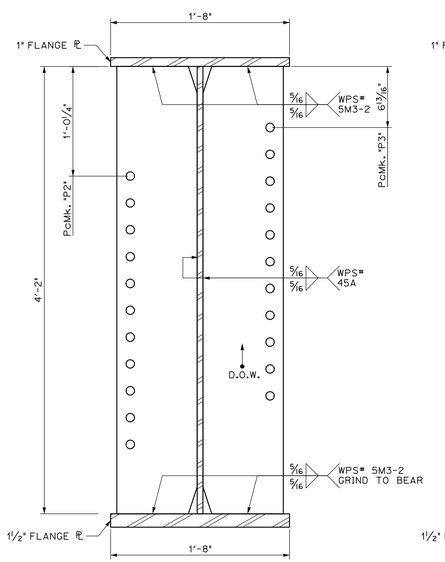

A/6a DIMENSIONAL SECTION
SCALE: 1½" = 1'-0"

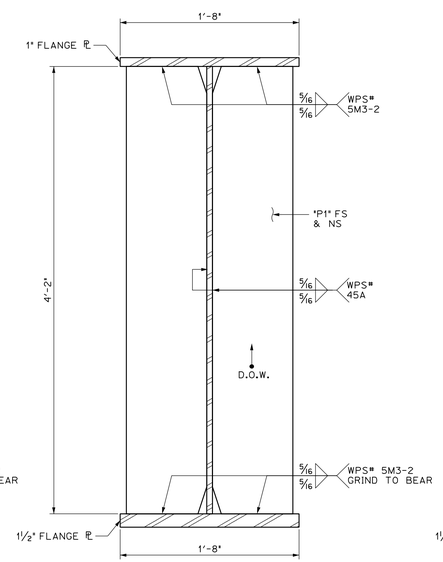

B/6a DIMENSIONAL SECTION
SCALE: 1½" = 1'-0"

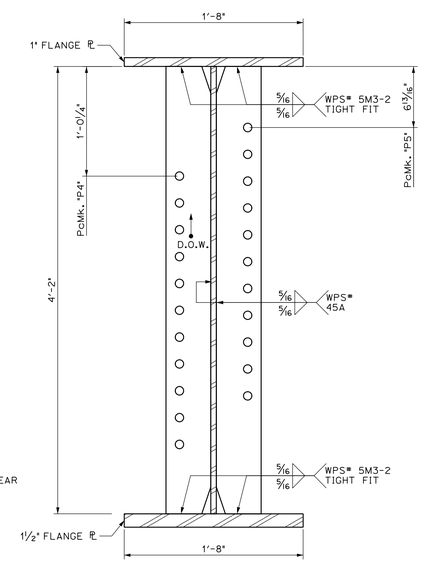

C/6a DIMENSIONAL SECTION
SCALE: 1½" = 1'-0"

BILL OF MATERIALS

SHIP	SHIP MARK	NO. PCS.	PIECE MARK	DESCRIPTION	LENGTH	REMARKS	MAT'L
1	G5			BRIDGE GIRDER ASSEMBLY	133'-5½"	38,225#	
		1	WP9	℄ ⅝" × 50"	53'-4¼"	5700#	CVN
		1	WP10	℄ ⅝" × 50"	80'-1⅜"	8550#	CVN
		1	TF9	℄ 1" × 20"	80'-1"	5475#	CVN
		1	TF10	℄ 1" × 20	53'-4¾"	3650#	CVN
		1	BF9	℄ 1½" × 20"	80'-0⅛"	8200#	CVN
		1	BF10	℄ 1½" × 20"	53'-4"	5450#	CVN
		4	P1	SEE SHEET M1			
		2	P2	SEE SHEET M1			
		2	P3	SEE SHEET M1			
		5	P4	SEE SHEET M1			
		5	P5	SEE SHEET M1			

PROJECT No. IM 091-2(79)
ITEM No. 506.55

FINISH SSPC SP6				
MATERIAL AASHTO M270 (ASTM A709) GRADE 50W				
HOLES 15/16 " Ø U.N.O.				
ELECTRODES PER WELD PROCEDURE				
WELDS PER WELD PROCEDURE				
SURFACE PREP SSPC SP6				
	NO	DATE	DESCRIPTION	BY

REVISIONS

ARC ENTERPRISES, INC.
ADVANCED RESOURCES & CONST. ENTERPRISES, INCORPORATED
P.O. BOX 120 KINGFIELD, ME. 04947
PHONE: (207) 265-2646 – FAX: (207) 265-4054

DRAFTER JJH	SOUTHBOUND GIRDER "G5"		PROJECT NO. 14-180
DATE JAN. 2015	HARTFORD, VT I-91 SB OVER US RTE 5 PROJECT NUMBER IM 091-2(79)		
CHECKED GNM			DWG. NO. 6a
DATE JAN. 2015	PCL CIVIL CONSTRUCTORS		

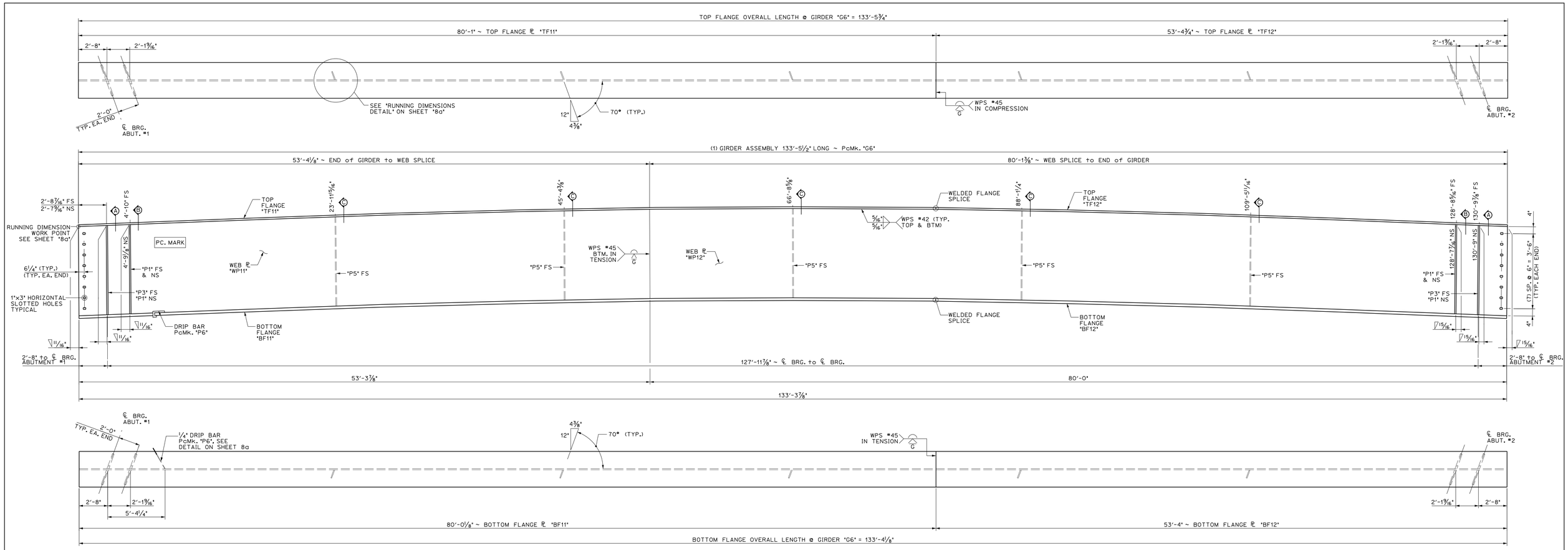

1/7a DIMENSIONAL PLANS & ELEVATIONS ~ GIRDER "G6"
HORIZONTAL SCALE: ¼" = 1'-0"
VERTICAL SCALE EXAGGERATED 2:1

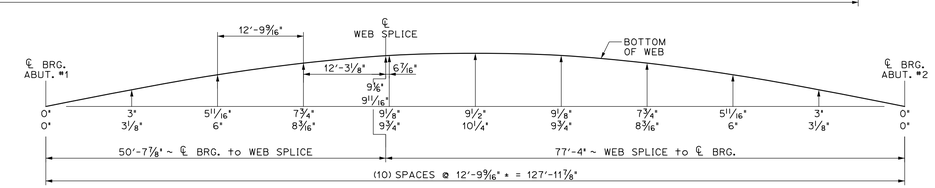

GIRDER "G6" CAMBER

THE TWO CAMBER DIMENSIONS SHOWN REPRESENT THE FOLLOWING:
TOP DIMENSION ~ TOTAL CAMBER IN FINISHED BEAM IN A NO-LOAD POSITION
BTM. DIMENSION ~ TOTAL CAMBER IN BEAM @ TIME OF FABRICATION

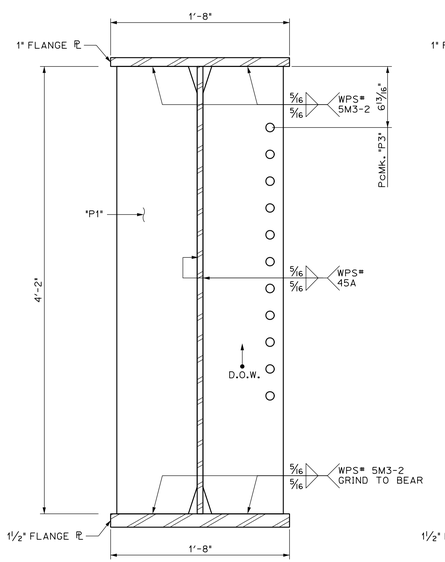

A/7a DIMENSIONAL SECTION
SCALE: 1½" = 1'-0"

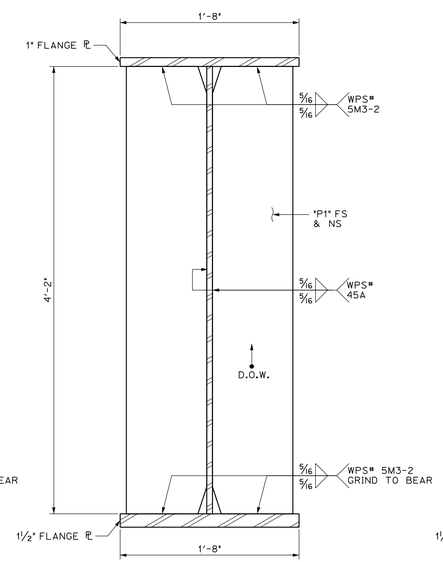

B/7a DIMENSIONAL SECTION
SCALE: 1½" = 1'-0"

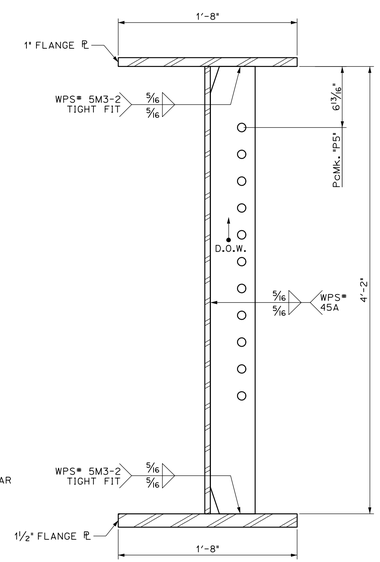

C/7a DIMENSIONAL SECTION
SCALE: 1½" = 1'-0"

BILL OF MATERIALS

SHIP	SHIP MARK	NO. PCS.	PIECE MARK	DESCRIPTION	LENGTH	REMARKS	MAT'L
1	G6			BRIDGE GIRDER ASSEMBLY	133'-5½"	38,100#	
		1	WP11	℞ ⅝" × 50"	53'-4¼"	5700#	CVN
		1	WP12	℞ ⅝" × 50"	80'-1⅜"	8550#	CVN
		1	TF11	℞ 1" × 20"	80'-1"	5475#	CVN
		1	TF12	℞ 1" × 20	53'-4¾"	3650#	CVN
		1	BF11	℞ 1½" × 20"	80'-0⅛"	8200#	CVN
		1	BF12	℞ 1½" × 20"	53'-4"	5450#	CVN
		6	P1	SEE SHEET M1			
		2	P3	SEE SHEET M1			
		5	P5	SEE SHEET M1			
		1	P6	℞ ¼" × 3½" DRIP BAR			

PROJECT No. IM 091-2(79)
ITEM No. 506.55

FINISH	SSPC SP6			
MATERIAL	AASHTO M270 (ASTM A709) GRADE 50W			
HOLES	15/16 " Ø U.N.O.			
ELECTRODES	PER WELD PROCEDURE			
WELDS	PER WELD PROCEDURE			
SURFACE PREP	SSPC SP6			
	NO	DATE	DESCRIPTION	BY

REVISIONS

ARC ENTERPRISES, INC.
ADVANCED RESOURCES & CONST. ENTERPRISES, INCORPORATED
P.O. BOX 120 KINGFIELD, ME. 04947
PHONE: (207) 265-2646 – FAX: (207) 265-4054

DRAFTER	JJH	SOUTHBOUND GIRDER "G6"	PROJECT NO. 14-180
DATE	JAN. 2015	HARTFORD, VT I-91 SB OVER US RTE 5 PROJECT NUMBER IM 091-2(79)	DWG. NO. 7a
CHECKED	GNM		
DATE	JAN. 2015	PCL CIVIL CONSTRUCTORS	

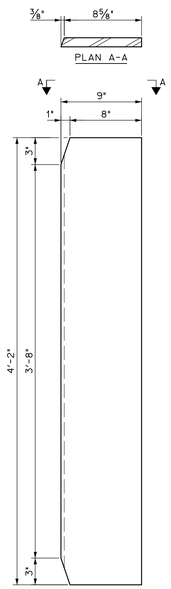

1" BEARING ℞, PcMk. "P1"

SCALE: 1½" = 1'-0"
FOR USE ON FASCIA GIRDERS @ ABUTMENTS
& AS LATERAL SLIDE BEARING STIFFENER

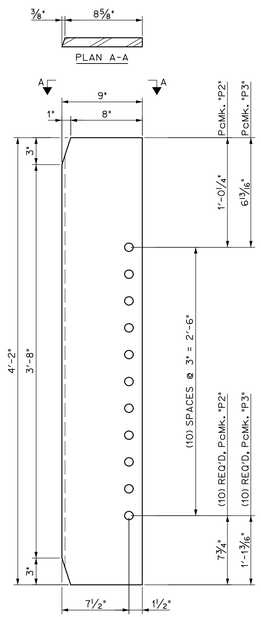

1" BEARING ℞, PcMk. VARIES

SCALE: 1½" = 1'-0"
FOR USE @ ABUTMENTS

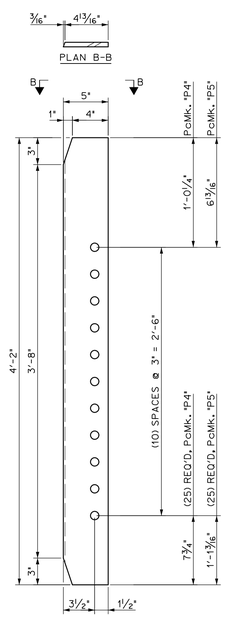

½" CONNECTION ℞, PcMk. VARIES

SCALE: 1½" = 1'-0"
FOR USE @ INTERMEDIATE DIAPHRAGM CONNECTIONS

SOUTHBOUND BOLT SCHEDULE

NO. BOLTS	PIECE MARK	LENGTH	DESCRIPTION	LOCATION
220	FB1	3"	⅞"Φ BOLT w/N&W (WEATHERING) ASTM A325, TYPE 3	ABUTMENT DIAPHRAGMS
550	FB2	2½"	⅞"Φ BOLT w/N&W (WEATHERING) ASTM A325, TYPE 3	INTERMEDIATE DIAPHRAGMS

BILL OF MATERIALS

SHIP	SHIP MARK	NO. PCS.	PIECE MARK	DESCRIPTION	LENGTH	WEIGHT	MATERIAL
28	P1			℞ 1" x 9"	4'-2"	130# EACH	
10	P2			℞ 1" x 9"	4'-2"	130# EACH	
10	P3			℞ 1" x 9"	4'-2"	130# EACH	
25	P4			℞ ½" x 5"	4'-2"	40# EACH	
25	P5			℞ ½" x 5"	4'-2"	40# EACH	
2	P6			℞ ¼" x 3½" DRIP BARS	1'-1 3/16"	5# EACH	

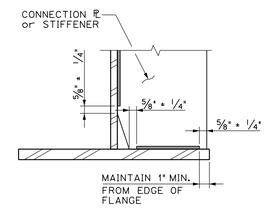

TYPICAL CONNECTION ℞
WELD TERMINATION DETAIL

N.T.S.

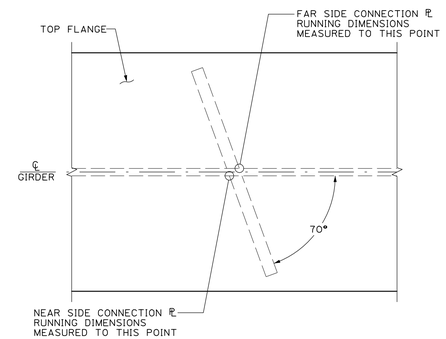

RUNNING DIMENSIONS DETAIL

SCALE: 2"= 1'-0"

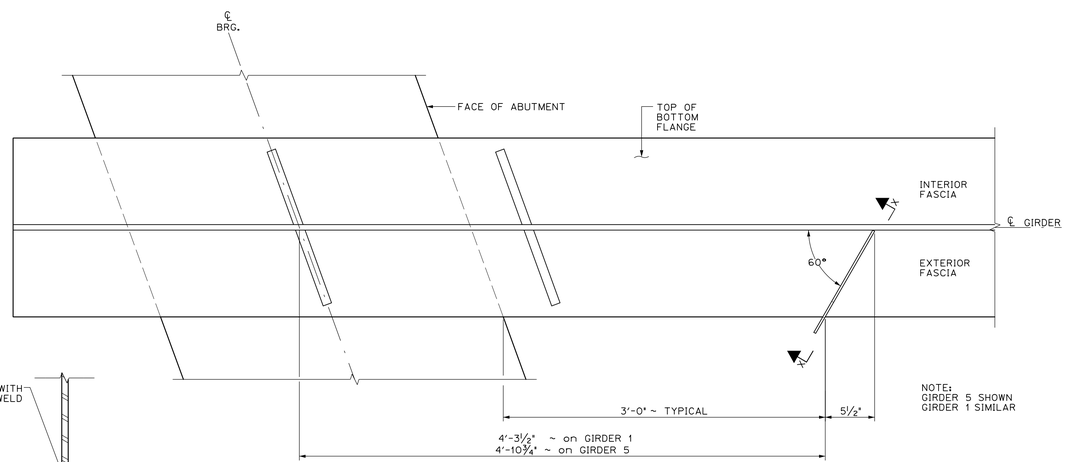

DRIP BAR PLAN

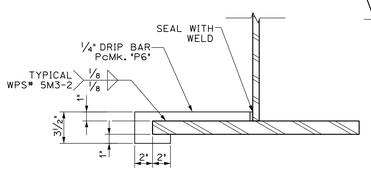

X/8a DRIP BAR SECTION

SCALE: 1½" = 1'-0"

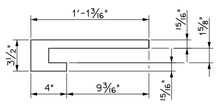

¼" DRIP BAR, PcMk. "P6"

SCALE: 1½" = 1'-0"

PROJECT No. IM 091-2(79)
ITEM No. 506.55

FINISH	SSPC SP6				
MATERIAL	AASHTO M270 (ASTM A709) GRADE 50W				
HOLES	15/16 " Ø U.N.O.				
ELECTRODES	PER WELD PROCEDURE				
WELDS	PER WELD PROCEDURE				
SURFACE PREP	SSPC SP6				
		NO	DATE	DESCRIPTION	BY

REVISIONS

ARC ENTERPRISES, INC.

ADVANCED RESOURCES & CONST. ENTERPRISES, INCORPORATED
P.O. BOX 120 KINGFIELD, ME. 04947
PHONE: (207) 265-2646 – FAX: (207) 265-4054

DRAFTER JJH	SOUTHBOUND MISCELLANEOUS DETAILS		PROJECT NO. 14-180
DATE JAN. 2015	HARTFORD, VT I-91 SB OVER US RTE 5 PROJECT NUMBER IM 091-2(79)		
CHECKED GNM	CC: PCL CIVIL CONSTRUCTORS		DWG. NO. 8a
DATE JAN. 2015			

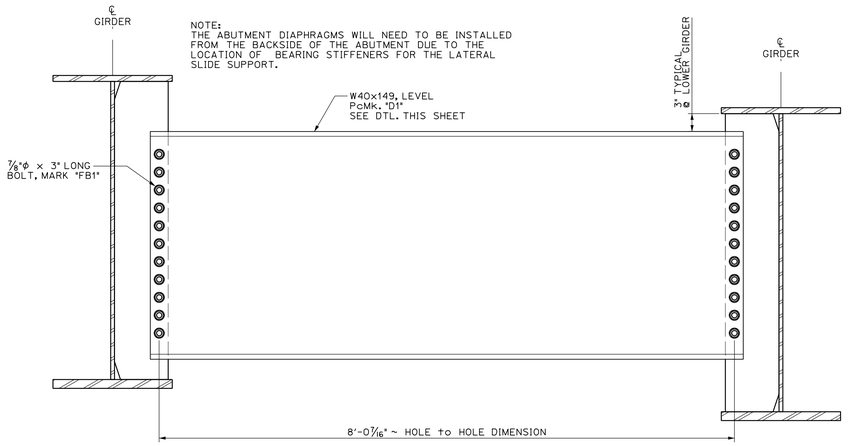

A / 9a "D1" TYPE DIAPHRAGMS
SCALE: 1" = 1'-0"
FOR USE @ ABUTMENT LOCATIONS

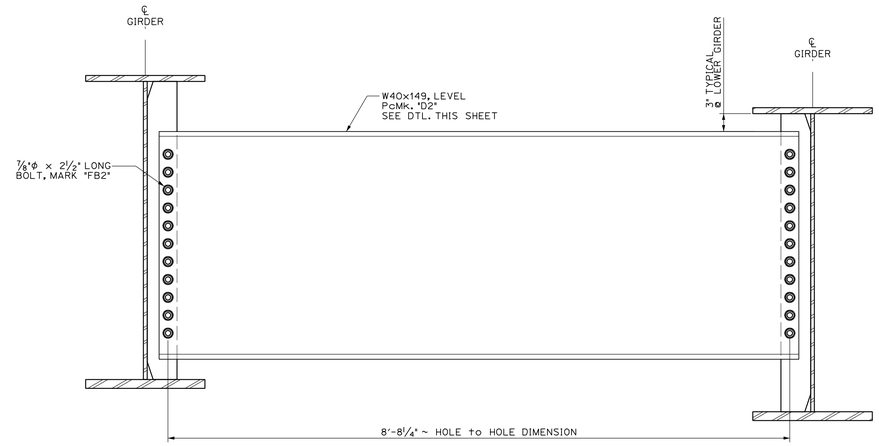

B / 9a "D2" TYPE DIAPHRAGMS
SCALE: 1" = 1'-0"
FOR USE @ INTERMEDIATE LOCATIONS

BILL OF MATERIALS

SHIP	SHIP MARK	NO. PCS.	PIECE MARK	DESCRIPTION	LENGTH	WEIGHT	MATERIAL
10	D1			ABUTMENT DIAPHRAGM			
		10	--	W140x149	8'-3 7/16"	1240# EACH	
25	D2			INTERMEDIATE DIAPHRAGM			
		25	--	W140x149	8'-11 1/4"	1340# EACH	

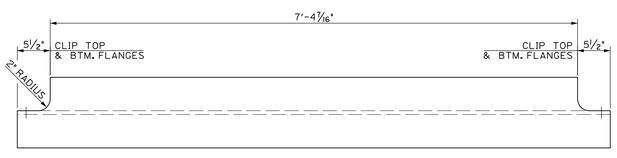

PLAN A-A

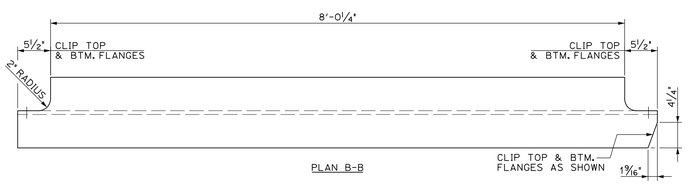

PLAN B-B

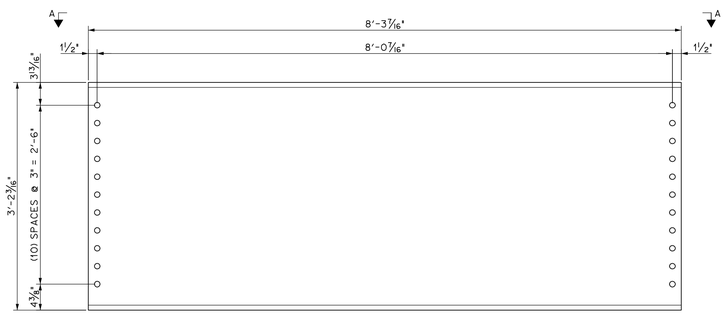

W40x149 DIAPHRAGM, PcMk. "D1"
SCALE: 1"=1'-0"

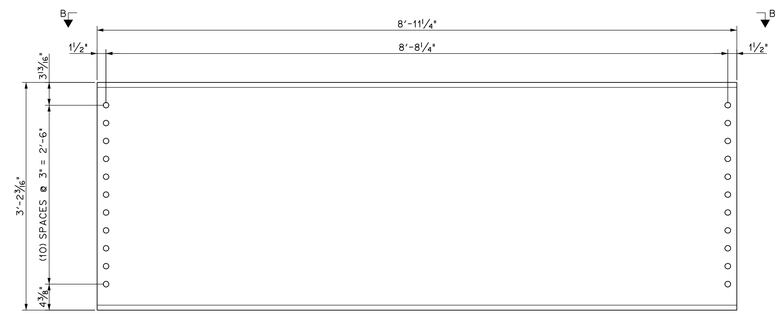

W40x149 DIAPHRAGM, PcMk. "D2"
SCALE: 1"=1'-0"

PROJECT No. IM 091-2(79)
ITEM No. 506.55

FINISH	SSPC SP6				
MATERIAL	AASHTO M270 (ASTM A709) GRADE 50W				
HOLES	15/16 " Ø U.N.O.				
ELECTRODES	PER WELD PROCEDURE				
WELDS	PER WELD PROCEDURE				
SURFACE PREP	SSPC SP6				
		NO	DATE	DESCRIPTION	BY

REVISIONS

ARC ENTERPRISES, INC.
ADVANCED RESOURCES & CONST. ENTERPRISES, INCORPORATED
P.O. BOX 120 KINGFIELD, ME. 04947
PHONE: (207) 265-2646 - FAX: (207) 265-4054

DRAFTER JJH	SOUTHBOUND DIAPHRAGM DETAILS		PROJECT NO. 14-180
DATE JAN. 2015	HARTFORD, VT I-91 SB OVER US RTE 5 PROJECT NUMBER IM 091-2(79)		
CHECKED GNM	CC:		DWG. NO.
DATE JAN. 2015	PCL CIVIL CONSTRUCTORS		9a

NOTE:

THE FIRST (9) SHEETS, NUMBERED 1a-9a, DETAIL THE GIRDERS FOR THE SOUTHBOUND BRIDGE 43S.

THE FOLLOWING (9) SHEETS, NUMBERED 1-7, M1, & M2 DETAIL THE GIRDERS FOR THE NORTHBOUND BRIDGE 43N.

REFER TO SHEET #1a OF THE SOUTHBOUND DETAILS FOR THE GENERAL NOTES AND BLOCKING DIAGRAM FOR BOTH BRIDGES.

PROJECT No. IM 091-2(79)
ITEM No. 506.55

FINISH				
MATERIAL				
HOLES				
ELECTRODES				
WELDS				
SURFACE PREP				
	NO	DATE	DESCRIPTION	BY

REVISIONS

ARC ENTERPRISES, INC.

ADVANCED RESOURCES & CONST. ENTERPRISES, INCORPORATED
P.O. BOX 120 KINGFIELD, ME. 04947
PHONE: (207) 265-2646 – FAX: (207) 265-4054

DRAFTER JJH	N/A		PROJECT NO. 14-180
DATE JAN. 2015	HARTFORD, VT I-91 OVER US RTE 5 PROJECT NUMBER IM 091-2(79)		DWG. NO. n/a
CHECKED GNM	CC: PCL CIVIL CONSTRUCTORS		
DATE JAN. 2015			

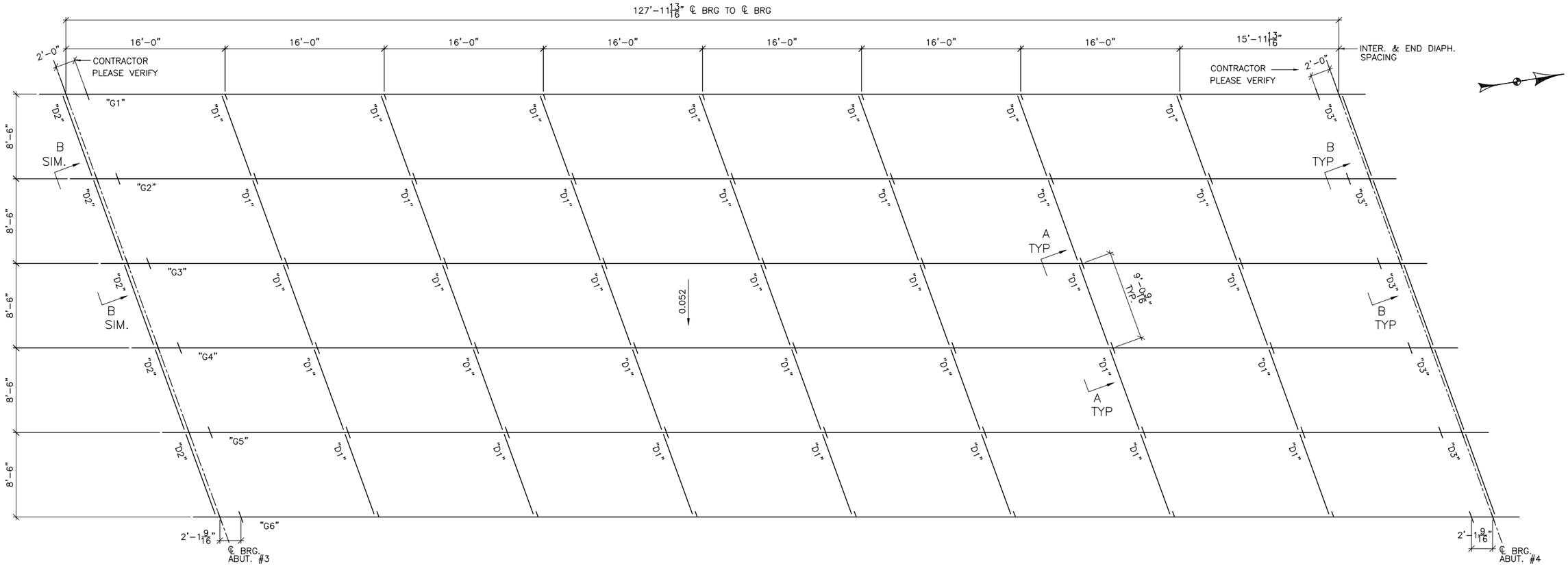

FRAMING PLAN

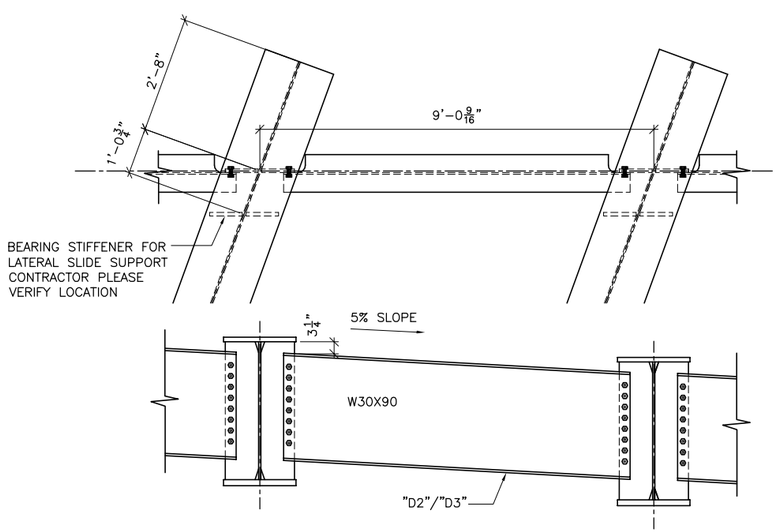

SECTION B–B

ABUT. #4 SHOWN, ABUT. #3 SIMILAR

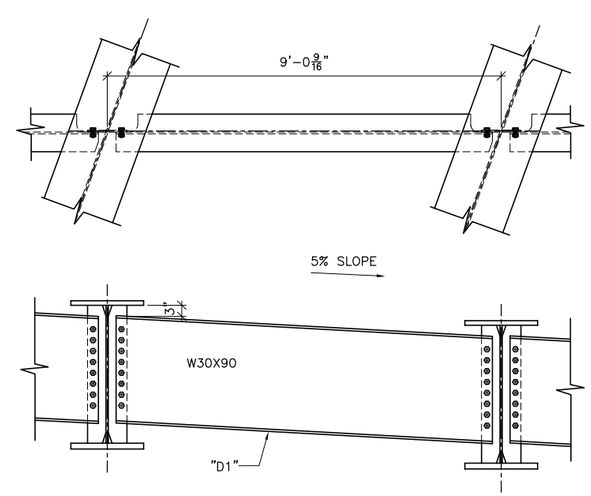

SECTION A–A

FIELD BOLT LIST

MARK	QTY.	DESCRIPTION	LOCATION
FB6	160	7/8"øX3	END DIAPH. TO CONN./STIFF. PL
FB4	560	7/8"øX2 1/2	INTER. DIAPH. TO CONN. PL

FINISH				
MATERIAL	SEE DETAIL SHEETS			
HOLES				
ELECTRODES				
WELDS	PER WPS			
SURFACE PREP				
	NO	DATE	DESCRIPTION	BY

REVISIONS

ARC ENTERPRISES, INC.

ADVANCED RESOURCES & CONST. ENTERPRISES, INCORPORATED
P.O. BOX 120 KINGFIELD, ME. 04947
PHONE: (207) 265-2646 – FAX: (207) 265-4054

DRAFTER JAC	FRAMING PLAN		PROJECT NO. 14-180
DATE 1/05/15	HARTFORD, VT I-91 NB OVER US RTE. 5 PROJECT NUMBER IM 091-2(79)		
CHECKED GNM	SC: PCL CIVIL CONSTRUCTORS		DWG. NO. 1
DATE 1/14/15			

J.A.C. DRAFTING/S45B14/1

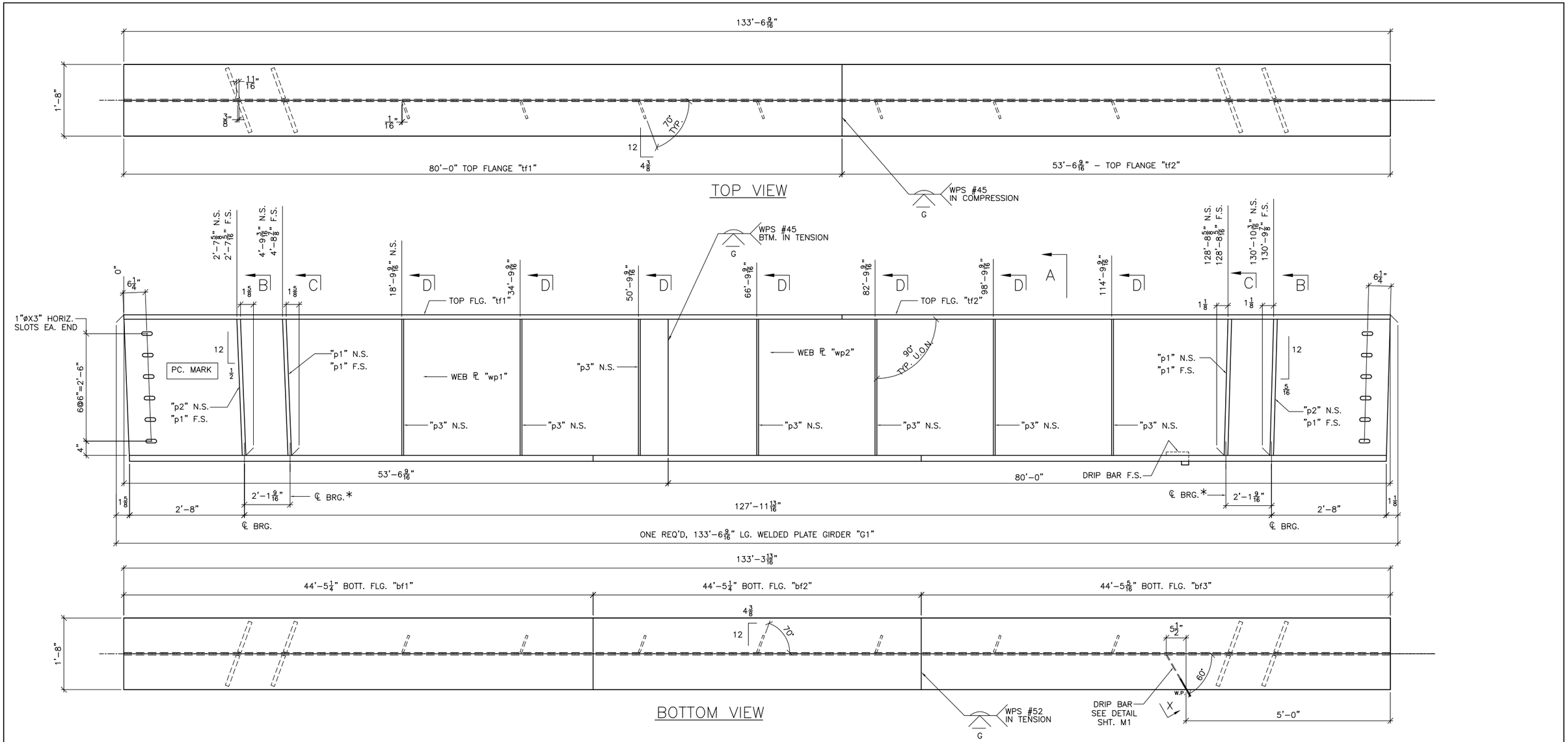

∗ STIFFENER FOR LATERAL SLIDE SUPPORT

BILL OF MATERIAL

SHIP	SHIP MARK	NO. PCS.	PIECE MARK	DESCRIPTION	LENGTH	REMARKS	WT.
1	G1			WELDED PLATE GIRDER			37866
		1	wp1	PL 5/8X38	53'-6 9/16	CVN	4328
		1	wp2	PL 5/8X38	80'-0	CVN	6466
		1	tp1	PL 1 1/4X20	80'-0	CVN	6806
		1	tp2	PL 1 1/4X20	53'-6 9/16	CVN	4556
		1	bp1	PL 1 3/8X20	44'-5 1/4	CVN	4915
		1	bp2	PL 1 3/8X20	44'-5 1/4	CVN	4915
		1	bp3	PL 1 3/8X20	44'-5 5/16	CVN	4915
		6	p1	SEE SHT. M2			
		2	p2	SEE SHT. M2			
		7	p3	SEE SHT. M2			

BOTTOM FLANGE ℄ MATERIAL SHALL BE ASTM A709 GR. HPS 70W

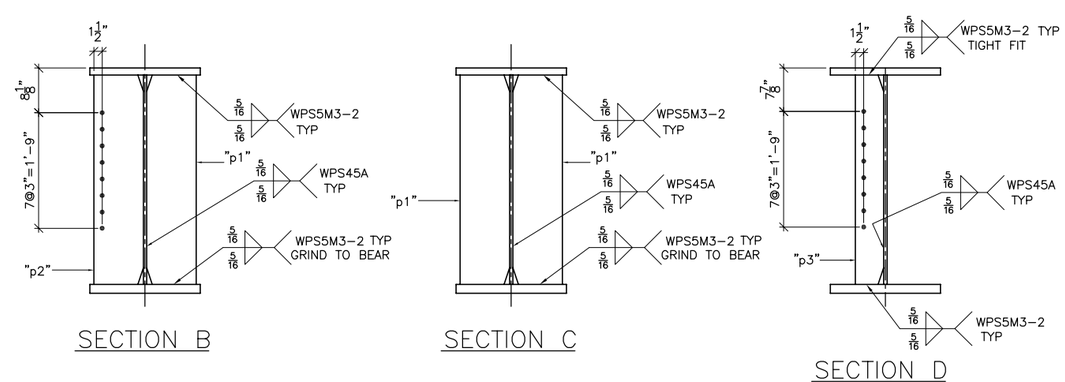

SHOP NOTE:
ENTIRE TOP FLANGE IS IN COMPRESSION
ENTIRE BOTT FLANGE IS IN TENSION

SEE SHEET M1 FOR CAMBER AND SECTIONS & DETAILS NOT SHOWN

FINISH	BARE STEEL (NO FINISH) U.O.N.			
MATERIAL	AASHTO M270 (ASTM A709) GR. 50W U.O.N.			
HOLES	15/16"ø U.O.N.			
ELECTRODES				
WELDS	PER WPS			
SURFACE PREP				

NO	DATE	DESCRIPTION	BY
		REVISIONS	

ARC ENTERPRISES, INC.

ADVANCED RESOURCES & CONST. ENTERPRISES, INCORPORATED
P.O. BOX 120 KINGFIELD, ME. 04947
PHONE: (207) 265-2646 – FAX: (207) 265-4054

DRAFTER JAC	STRINGER DETAILS, G1	PROJECT NO.	
DATE 1/6/15	HARTFORD, VT I-91 NB OVER US RTE. 5 PROJECT NUMBER IM 091-2(79)	14-180	
CHECKED JS	G.C. PCL CIVIL CONSTRUCTORS	DWG. NO.	
DATE 1/14/15		2	

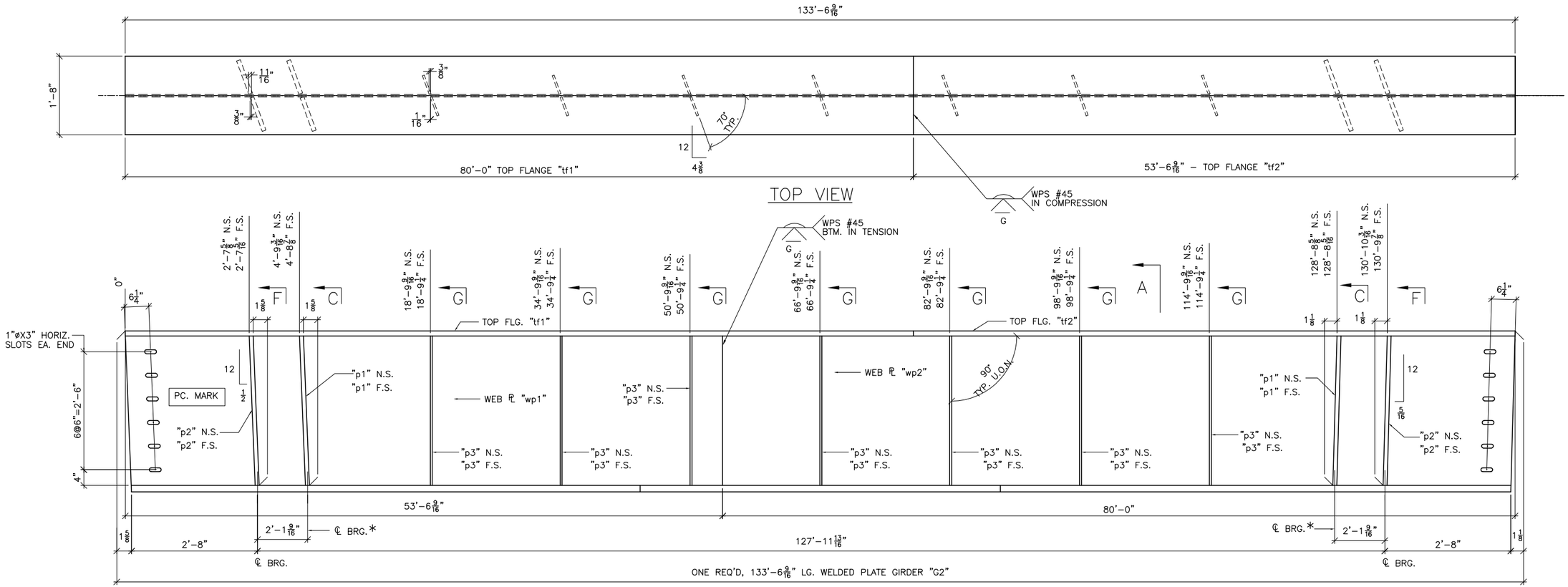

* STIFFENER FOR LATERAL SLIDE SUPPORT

BILL OF MATERIAL

SHIP	SHIP MARK	NO. PCS.	PIECE MARK	DESCRIPTION	LENGTH	REMARKS	WT.
1	G2			WELDED PLATE GIRDER			38055
		1	wp1	PL 5/8X38	53'-6 9/16	CVN	4328
		1	wp2	PL 5/8X38	80'-0	CVN	6466
		1	tp1	PL 1 1/4X20	80'-0	CVN	6806
		1	tp2	PL 1 1/4X20	53'-6 9/16	CVN	4556
		1	bp1	PL 1 5/8X20	44'-5 1/4	CVN	4915
		1	bp2	PL 1 5/8X20	44'-5 1/4	CVN	4915
		1	bp3	PL 1 5/8X20	44'-5 5/16	CVN	4915
		4	p1	SEE SHT. M2			
		4	p2	SEE SHT. M2			
		14	p3	SEE SHT. M2			

BOTTOM FLANGE PL MATERIAL SHALL BE ASTM A709 GR. HPS 70W

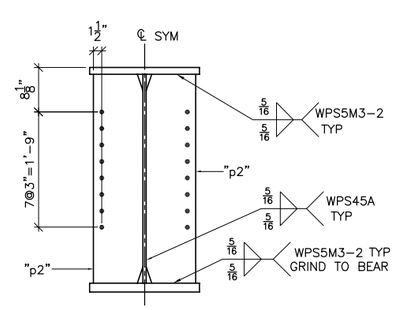

SECTION F

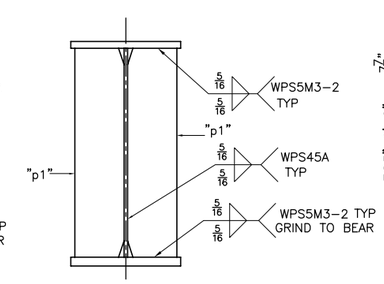

SECTION C

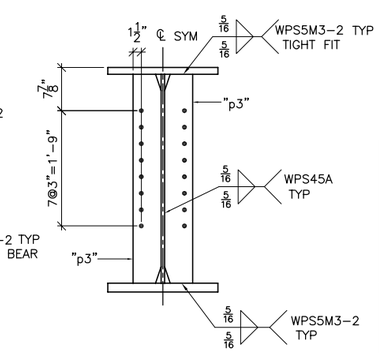

SECTION G

SHOP NOTE:

ENTIRE TOP FLANGE IS IN COMPRESSION
ENTIRE BOTT FLANGE IS IN TENSION

FINISH	BARE STEEL (NO FINISH) U.O.N.
MATERIAL	AASHTO M270 (ASTM A709) GR. 50W U.O.N.
HOLES	15/16"ø U.O.N.
ELECTRODES	
WELDS	PER WPS
SURFACE PREP	

NO	DATE	DESCRIPTION	BY
		REVISIONS	

ARC ENTERPRISES, INC.

ADVANCED RESOURCES & CONST. ENTERPRISES, INCORPORATED
P.O. BOX 120 KINGFIELD, ME. 04947
PHONE: (207) 265-2646 - FAX: (207) 265-4054

DRAFTER	JAC	STRINGER DETAILS, G2	PROJECT NO. 14-180
DATE	1/6/15	HARTFORD, VT I-91 NB OVER US RTE. 5 PROJECT NUMBER IM 091-2(79)	
CHECKED	JS		DWG. NO.
DATE	1/14/15	G.C. PCL CIVIL CONSTRUCTORS	3

SEE SHEET M1 FOR CAMBER AND SECTIONS & DETAILS NOT SHOWN

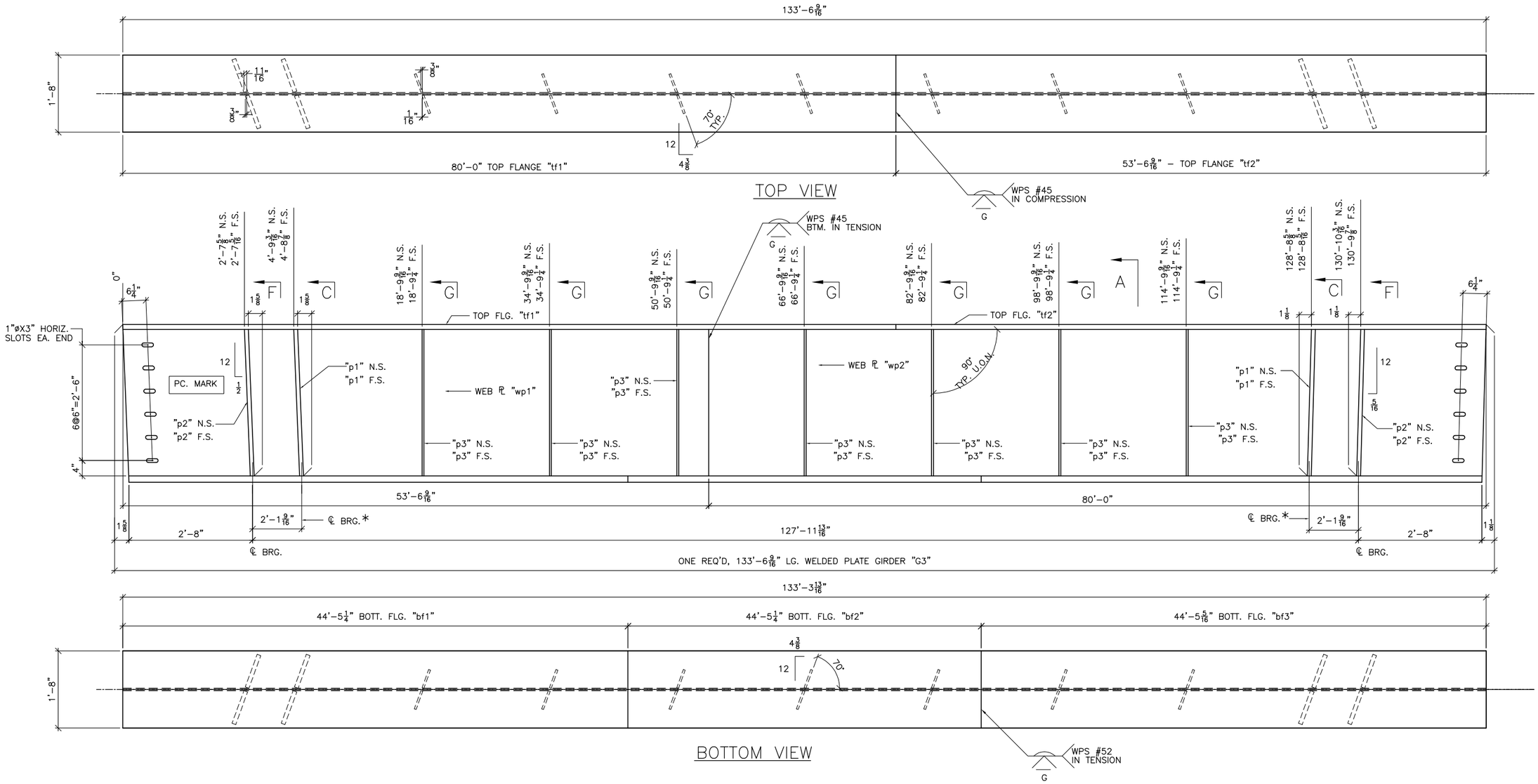

* STIFFENER FOR LATERAL SLIDE SUPPORT

BILL OF MATERIAL

SHIP	SHIP MARK	NO. PCS.	PIECE MARK	DESCRIPTION	LENGTH	REMARKS	WT.
1	G3			WELDED PLATE GIRDER			38055
		1	wp1	ℙ 5/8X38	53'-6 9/16	CVN	4328
		1	wp2	ℙ 5/8X38	80'-0	CVN	6466
		1	tp1	ℙ 1 1/4X20	80'-0	CVN	6806
		1	tp2	ℙ 1 1/4X20	53'-6 9/16	CVN	4556
		1	bp1	ℙ 1 5/8X20	44'-5 1/4	CVN	4915
		1	bp2	ℙ 1 5/8X20	44'-5 1/4	CVN	4915
		1	bp3	ℙ 1 5/8X20	44'-5 5/16	CVN	4915
		4	p1	SEE SHT. M2			
		4	p2	SEE SHT. M2			
		14	p3	SEE SHT. M2			

BOTTOM FLANGE ℙ MATERIAL SHALL BE ASTM A709 GR. HPS 70W

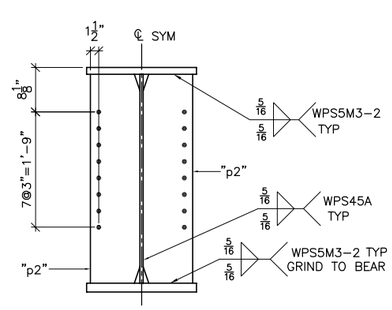

SECTION F

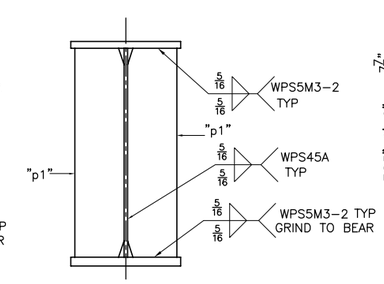

SECTION C

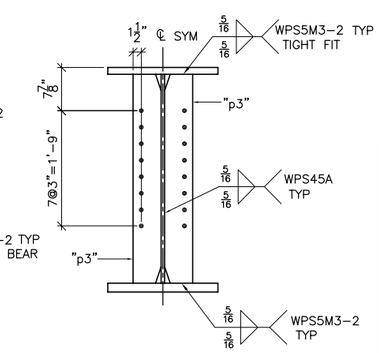

SECTION G

SHOP NOTE:

ENTIRE TOP FLANGE IS IN COMPRESSION
ENTIRE BOTT FLANGE IS IN TENSION

FINISH	BARE STEEL (NO FINISH) U.O.N.
MATERIAL	AASHTO M270 (ASTM A709) GR. 50W U.O.N.
HOLES	15/16"ø U.O.N.
ELECTRODES	
WELDS	PER WPS
SURFACE PREP	

NO	DATE	DESCRIPTION	BY
		REVISIONS	

ARC ENTERPRISES, INC.
ADVANCED RESOURCES & CONST. ENTERPRISES, INCORPORATED
P.O. BOX 120 KINGFIELD, ME. 04947
PHONE: (207) 265-2646 - FAX: (207) 265-4054

DRAFTER	JAC	STRINGER DETAILS, G3	PROJECT NO. 14-180
DATE	1/6/15	HARTFORD, VT I-91 NB OVER US RTE. 5 PROJECT NUMBER IM 091-2(79)	DWG. NO. 4
CHECKED	JS	G.C. PCL CIVIL CONSTRUCTORS	
DATE	1/14/15		

SEE SHEET M1 FOR CAMBER AND SECTIONS & DETAILS NOT SHOWN

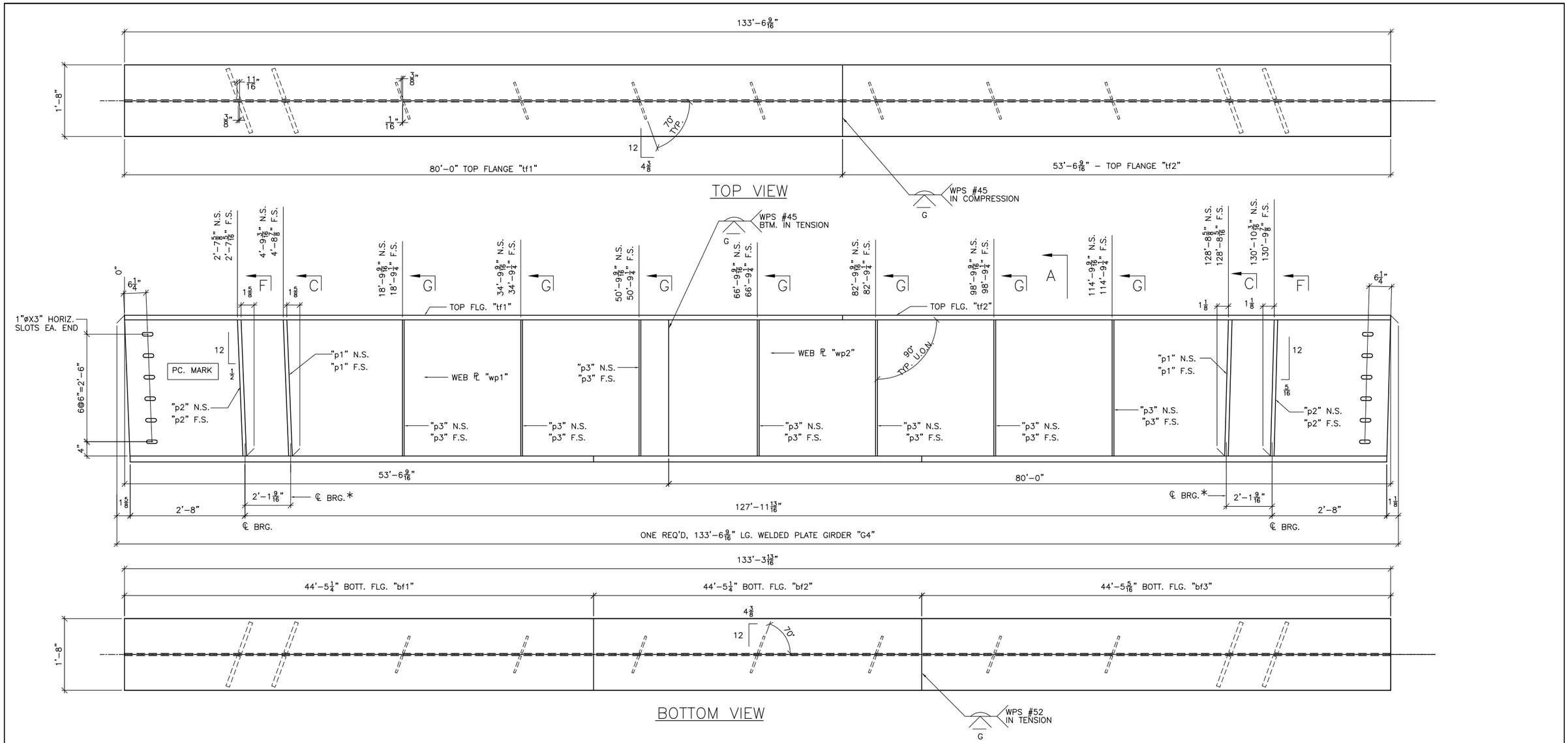

* STIFFENER FOR LATERAL SLIDE SUPPORT

BILL OF MATERIAL

SHIP	SHIP MARK	NO. PCS.	PIECE MARK	DESCRIPTION	LENGTH	REMARKS	WT.
1	G4			WELDED PLATE GIRDER			38055
		1	wp1	ℙ 5/8X38	53'-6 9/16	CVN	4328
		1	wp2	ℙ 5/8X38	80'-0	CVN	6466
		1	tp1	ℙ 1 1/4X20	80'-0	CVN	6806
		1	tp2	ℙ 1 1/4X20	53'-6 9/16	CVN	4556
		1	bp1	ℙ 1 5/8X20	44'-5 1/4	CVN	4915
		1	bp2	ℙ 1 5/8X20	44'-5 1/4	CVN	4915
		1	bp3	ℙ 1 5/8X20	44'-5 5/16	CVN	4915
		4	p1	SEE SHT. M2			
		4	p2	SEE SHT. M2			
		14	p3	SEE SHT. M2			

BOTTOM FLANGE ℙ MATERIAL SHALL BE ASTM A709 GR. HPS 70W

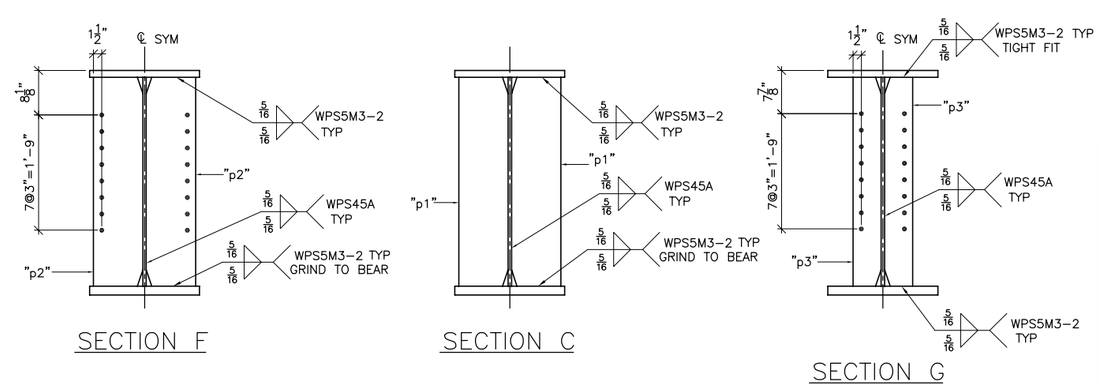

SHOP NOTE:

ENTIRE TOP FLANGE IS IN COMPRESSION

ENTIRE BOTT FLANGE IS IN TENSION

FINISH	BARE STEEL (NO FINISH) U.O.N.
MATERIAL	AASHTO M270 (ASTM A709) GR. 50W U.O.N.
HOLES	15/16"ø U.O.N.
ELECTRODES	
WELDS	PER WPS
SURFACE PREP	

NO	DATE	DESCRIPTION	BY
		REVISIONS	

ARC ENTERPRISES, INC.

ADVANCED RESOURCES & CONST. ENTERPRISES, INCORPORATED
P.O. BOX 120 KINGFIELD, ME. 04947
PHONE: (207) 265-2646 - FAX: (207) 265-4054

DRAFTER	JAC	STRINGER DETAILS, G4	PROJECT NO. 14-180
DATE	1/6/15	HARTFORD, VT I-91 NB OVER US RTE. 5 PROJECT NUMBER IM 091-2(79)	DWG. NO. 5
CHECKED	JS	G.C. PCL CIVIL CONSTRUCTORS	
DATE	1/14/15		

SEE SHEET M1 FOR CAMBER AND SECTIONS & DETAILS NOT SHOWN

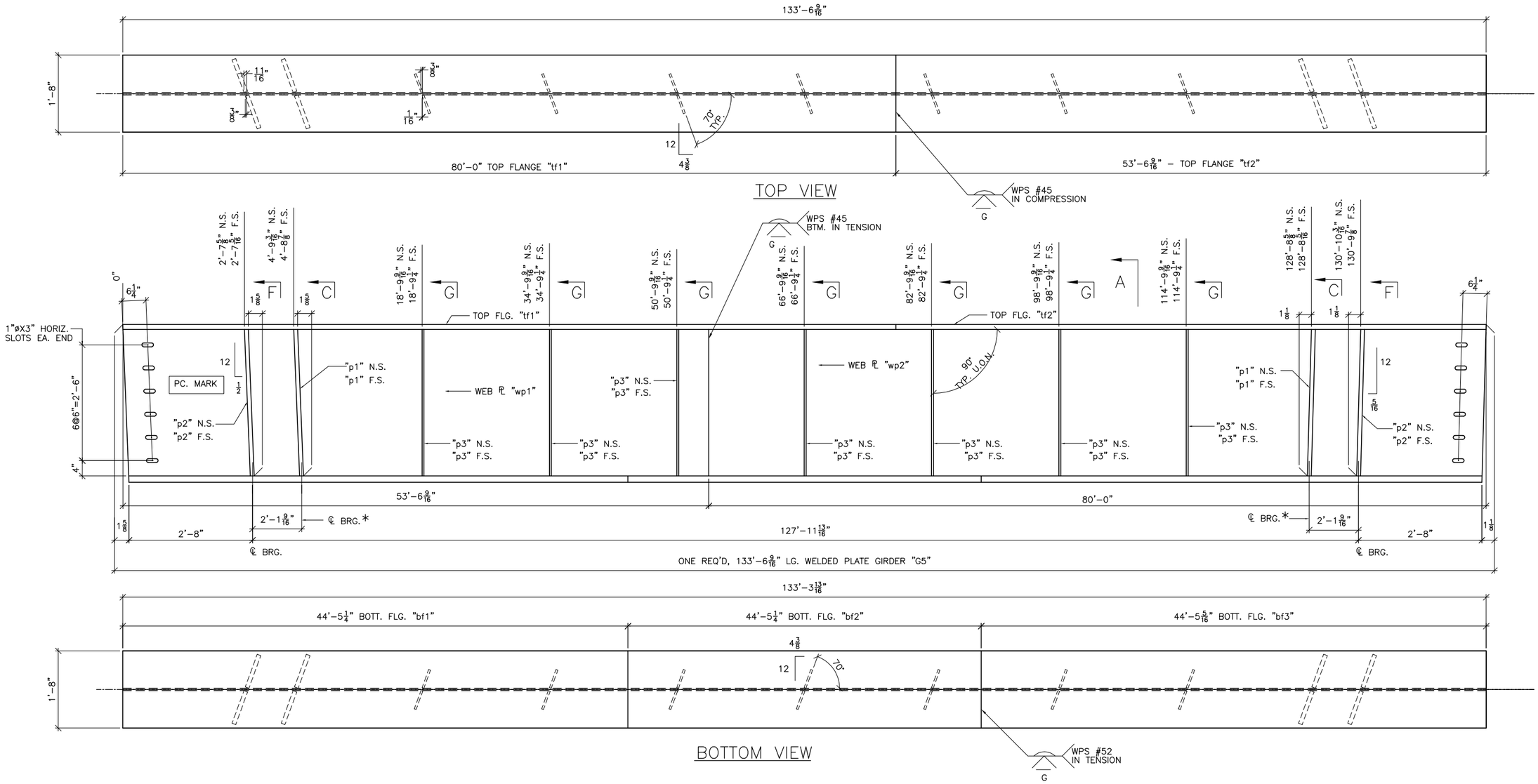

* STIFFENER FOR LATERAL SLIDE SUPPORT

BILL OF MATERIAL

SHIP	SHIP MARK	NO. PCS.	PIECE MARK	DESCRIPTION	LENGTH	REMARKS	WT.
1	G5			WELDED PLATE GIRDER			38055
		1	wp1	ℙ 5/8X38	53'-6 9/16	CVN	4328
		1	wp2	ℙ 5/8X38	80'-0	CVN	6466
		1	tp1	ℙ 1 1/4X20	80'-0	CVN	6806
		1	tp2	ℙ 1 1/4X20	53'-6 9/16	CVN	4556
		1	bp1	ℙ 1 5/8X20	44'-5 1/4	CVN	4915
		1	bp2	ℙ 1 5/8X20	44'-5 1/4	CVN	4915
		1	bp3	ℙ 1 5/8X20	44'-5 5/16	CVN	4915
		4	p1	SEE SHT. M2			
		4	p2	SEE SHT. M2			
		14	p3	SEE SHT. M2			

BOTTOM FLANGE ℙ MATERIAL SHALL BE ASTM A709 GR. HPS 70W

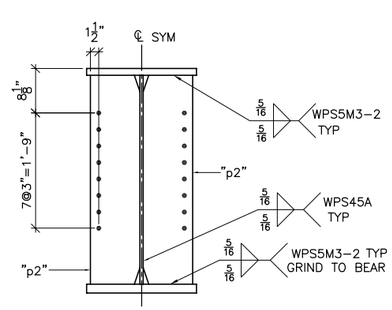

SECTION F

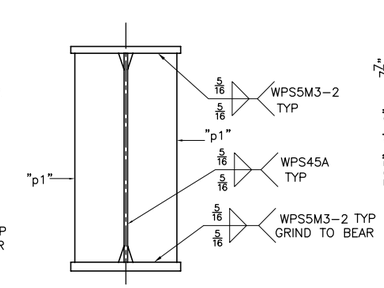

SECTION C

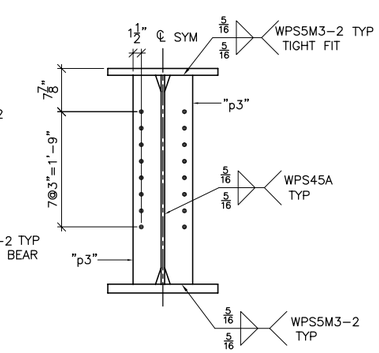

SECTION G

SHOP NOTE:

ENTIRE TOP FLANGE IS IN COMPRESSION
ENTIRE BOTT FLANGE IS IN TENSION

FINISH	BARE STEEL (NO FINISH) U.O.N.
MATERIAL	AASHTO M270 (ASTM A709) GR. 50W U.O.N.
HOLES	15/16"ø U.O.N.
ELECTRODES	
WELDS	PER WPS
SURFACE PREP	

NO	DATE	DESCRIPTION	BY
		REVISIONS	

SEE SHEET M1 FOR CAMBER AND SECTIONS & DETAILS NOT SHOWN

ARC ENTERPRISES, INC.

ADVANCED RESOURCES & CONST. ENTERPRISES, INCORPORATED
P.O. BOX 120 KINGFIELD, ME. 04947
PHONE: (207) 265-2646 – FAX: (207) 265-4054

DRAFTER	JAC	STRINGER DETAILS, G5	PROJECT NO. 14-180
DATE	1/6/15	HARTFORD, VT I-91 NB OVER US RTE. 5 PROJECT NUMBER IM 091-2(79)	DWG. NO. 6
CHECKED	JS	G.C. PCL CIVIL CONSTRUCTORS	
DATE	1/14/15		

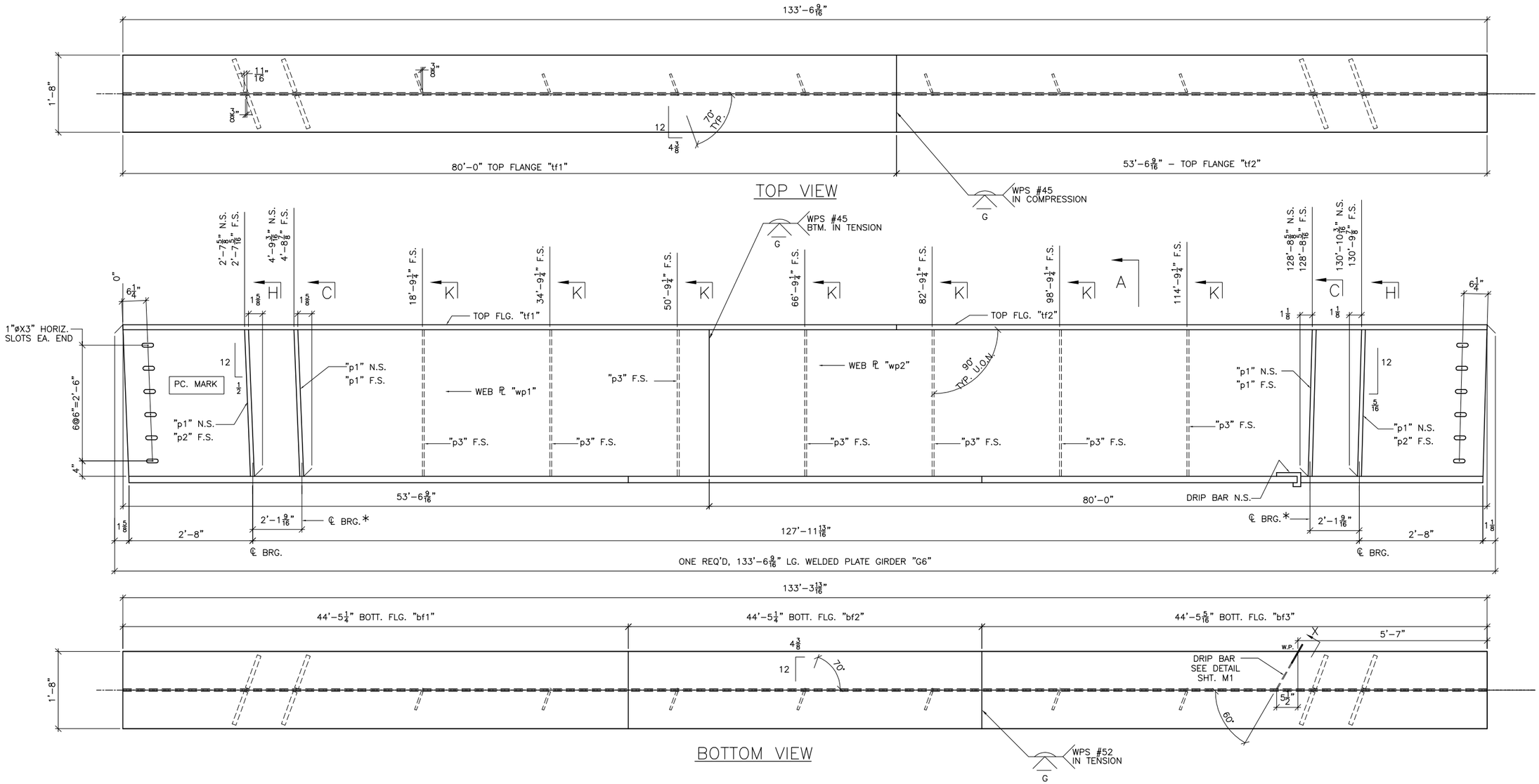

* STIFFENER FOR LATERAL SLIDE SUPPORT

BILL OF MATERIAL

SHIP	SHIP MARK	NO. PCS.	PIECE MARK	DESCRIPTION	LENGTH	REMARKS	WT.
1	G6			WELDED PLATE GIRDER			37866
		1	wp1	ℙ 5/8X38	53'-6 9/16	CVN	4328
		1	wp2	ℙ 5/8X38	80'-0	CVN	6466
		1	tp1	ℙ 1 1/4X20	80'-0	CVN	6806
		1	tp2	ℙ 1 1/4X20	53'-6 9/16	CVN	4556
		1	bp1	ℙ 1 5/8X20	44'-5 1/4	CVN	4915
		1	bp2	ℙ 1 5/8X20	44'-5 1/4	CVN	4915
		1	bp3	ℙ 1 5/8X20	44'-5 5/16	CVN	4915
		6	p1	SEE SHT. M2			
		2	p2	SEE SHT. M2			
		7	p3	SEE SHT. M2			

BOTTOM FLANGE ℙ MATERIAL SHALL BE ASTM A709 GR. HPS 70W

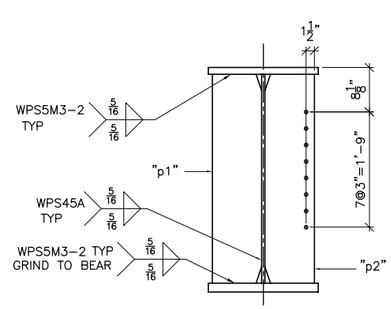

SECTION H

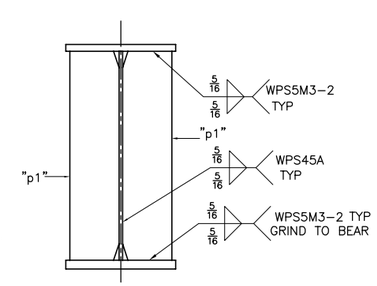

SECTION C

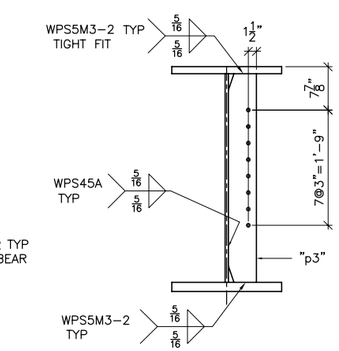

SECTION G

SHOP NOTE:
ENTIRE TOP FLANGE IS IN COMPRESSION
ENTIRE BOTT FLANGE IS IN TENSION

FINISH	BARE STEEL (NO FINISH) U.O.N.			
MATERIAL	AASHTO M270 (ASTM A709) GR. 50W U.O.N.			
HOLES	15/16"ø U.O.N.			
ELECTRODES				
WELDS	PER WPS			
SURFACE PREP				

NO	DATE	DESCRIPTION	BY
		REVISIONS	

SEE SHEET M1 FOR CAMBER AND SECTIONS & DETAILS NOT SHOWN

ARC ENTERPRISES, INC.

ADVANCED RESOURCES & CONST. ENTERPRISES, INCORPORATED
P.O. BOX 120 KINGFIELD, ME. 04947
PHONE: (207) 265-2646 – FAX: (207) 265-4054

DRAFTER JAC	STRINGER DETAILS, G6	PROJECT NO.	
DATE 1/6/15	HARTFORD, VT I-91 NB OVER US RTE. 5 PROJECT NUMBER IM 091-2(79)	14-180	
CHECKED JS		DWG. NO.	
DATE 1/14/15	G.C. PCL CIVIL CONSTRUCTORS	7	

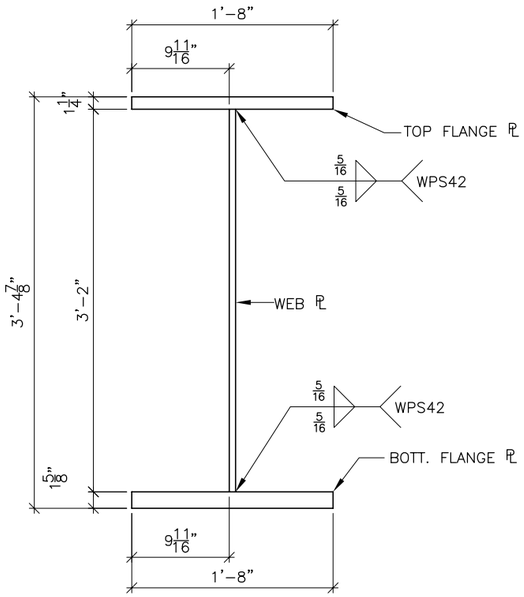

SECTION A

(GIRDER ASS'Y)

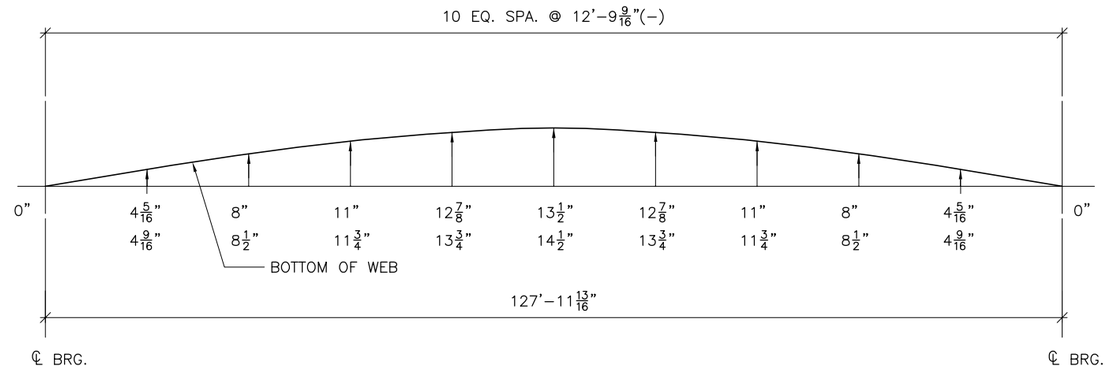

CAMBER DIAGRAM

THE TWO CAMBER DIMENSIONS SHOWN REPRESENT THE FOLLOWING:
TOP DIMENSION – TOTAL CAMBER IN FINISHED BEAM IN A NO-LOAD POSITION
BTM. DIMENSION – TOTAL CAMBER OF WEB PL @ TIME OF FABRICATION

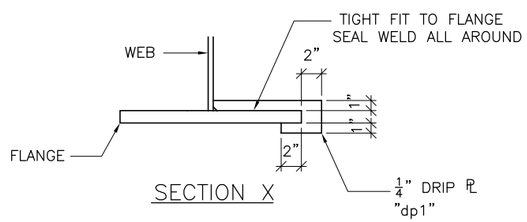

SECTION X

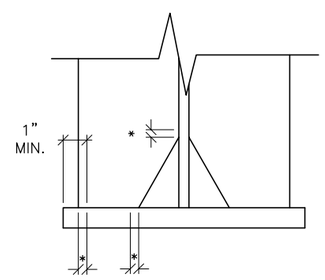

WELD TERMINATION DETAIL

* NO WELD FOR 3/8" MIN. 7/8" MAX.

FINISH					
MATERIAL	ASTM A709 GRADE 50W U.O.N.				
HOLES	15/16"ø U.O.N.				
ELECTRODES					
WELDS	PER WPS				
SURFACE PREP					
		NO	DATE	DESCRIPTION	BY

REVISIONS

ARC ENTERPRISES, INC.

ADVANCED RESOURCES & CONST. ENTERPRISES, INCORPORATED
P.O. BOX 120 KINGFIELD, ME. 04947
PHONE: (207) 265-2646 – FAX: (207) 265-4054

DRAFTER JAC	MISC. DETAILS		PROJECT NO.
DATE 1/09/15	HARTFORD, VT I-95 NB OVER US RTE. 5		14-180
CHECKED JS	PROJECT NUMBER IM 091-2(79)		DWG. NO.
DATE 1/14/15	CUSTOMER: PCL CIVIL CONSTRUCTORS		M1

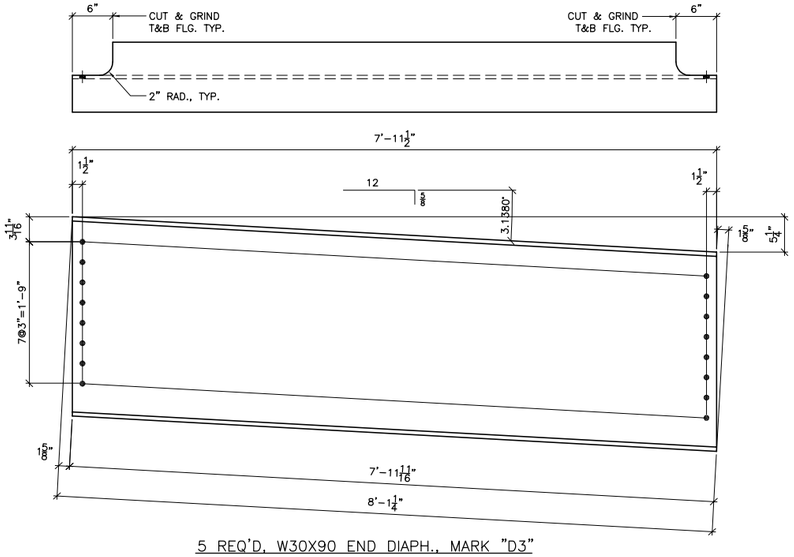

5 REQ'D, W30X90 END DIAPH., MARK "D3"

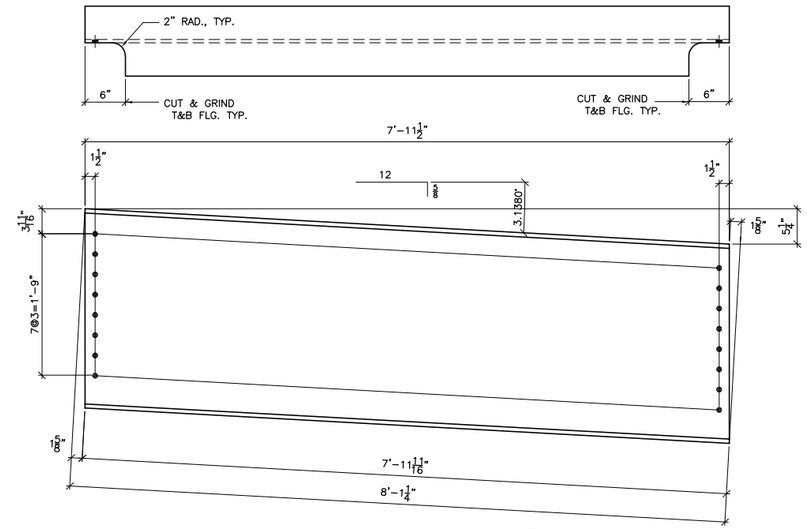

5 REQ'D, W30X90 END DIAPH., MARK "D2"

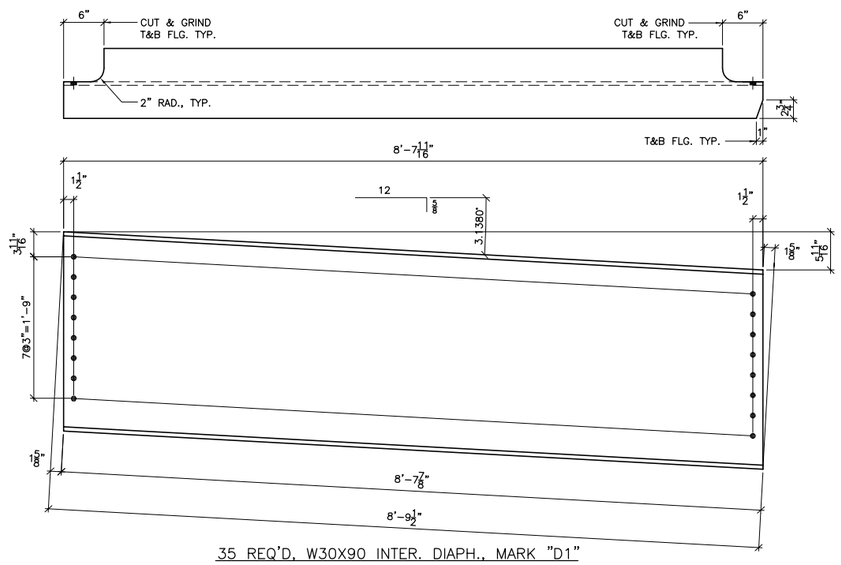

35 REQ'D, W30X90 INTER. DIAPH., MARK "D1"

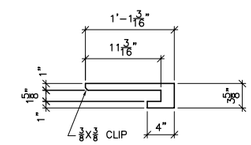

2 REQ'D, 1/4" DRIP PL, MARK "dp1"

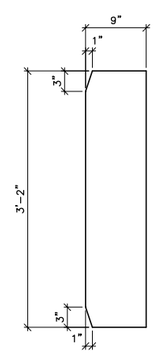

28 REQ'D, 1" STIFF. PL, MARK "p1"

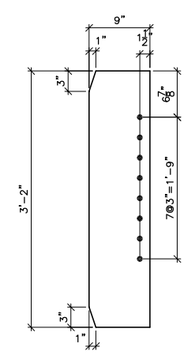

20 REQ'D, 1" STIFF./CONN. PL, MARK "p2"

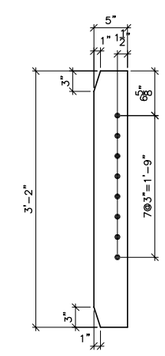

70 REQ'D, 1/2" CONN. PL, MARK "p3"

BILL OF MATERIAL

SHIP	SHIP MARK	NO. PCS.	PIECE MARK	DESCRIPTION	LENGTH	REMARKS	WT.
		28	p1	PL 1X9	3'-2		2716
		20	p2	PL 1X9	3'-2		1940
		70	p3	PL 1/2X5	3'-2		1890
		2	dp1	PL 1/4X3 5/8	1'-1 3/16		3
	D1	35		W30X90	8'-9 1/2		26775
	D2	5		W30X90	8'-1 1/4		3510
	D3	5		W30X90	8'-1 1/4		3510

FINISH	BARE STEEL (NO FINISH) U.O.N.			
MATERIAL	ASTM A709 GRADE 50W U.O.N.			
HOLES	15/16"ø U.O.N.			
ELECTRODES				
WELDS	PER WPS			
SURFACE PREP				
		NO	DATE	DESCRIPTION	BY

REVISIONS

ARC ENTERPRISES, INC.
ADVANCED RESOURCES & CONST. ENTERPRISES, INCORPORATED
P.O. BOX 120 KINGFIELD, ME. 04947
PHONE: (207) 265-2646 – FAX: (207) 265-4054

DRAFTER	JAC	MISC. DETAILS	PROJECT NO. 14-180
DATE	1/09/15	HARTFORD, VT I-95 NB OVER US RTE. 5 PROJECT NUMBER IM 091-2(79)	
CHECKED	JS		DWG. NO.
DATE	1/14/15	CUSTOMER: PCL CIVIL CONSTRUCTORS	M2

ARC ENTERPRISES, INC.
STEEL FABRICATION

AISC CERTIFIED FABRICATOR

PHONE: 207.265.2646 • FAX: 207.265.4054 WWW.ARCENTERPRISESINC.COM

LETTER OF TRANSMITTAL

DATE: 1/19/15	**A.R.C. JOB#: 14-180**
SHIP TO: PCL Civil Constructors, Inc. Jeremy Mackling	**PROJECT NAME:** Hartford, VT Bridge Project
DOCUMENTS ENCLOSED: WPS Package for the Hartford Bridge Project	

COPIES	PAGES	DESCRIPTION
1	9	WPS Package submitted for approval

REMARKS:

SIGNED: _____
Jake Kilbreth, A.R.C. Enterprises, Inc.

WELDING PROCEDURE SPECIFICATION (WPS) YES (X)
PREQUALIFIED _____ QUALIFIED BY TESTING _____
or PROCEDURE QUALIFICATION RECORD (PQR) YES (x)

Company Name ARC Ent. Inc.
Welding Process(es) SAW
Supporting PQR No.(s) PQR # 52

Identification # ARC WPS # 52
Revision 2 **Date** 1/24/2013 **By** SVH
Autherized by **STEVE HOWARD** **Date** 1/24/2013
Type - Manual Semi - Automatic ( )
Machine ( ) Automatic (X)

JOINT DESIGN USED
Type B - L2c - S
Single (X) Double Weld ( )
Backing Yes ( ) NO
Backing Material
Root Opening 0 - 1/16" **Root Face Dimension**
Groove Angle 60 degrees **Radius (J-U)**
Back Gouging (YES) **Method**

Material Spec A 709
Type or Grade HPS 70W
Thickness **Groove** U **Fillet**
Diameter **(Pipe)**

FILLER METALS Lincoln LA-85
AWS Specification A 5.23
AWS Classification ENi5

SHIELDING
Flux MIL800-H **Gas**
Composition
Electrode - Flux (Class) **Flow Rate**
F8A8-ENi5-NI5-H2 **Gas Cup Size**

Preheat 3/4"= 50 degrees F 3/4 to 1 1/2"= 125 degrees F
1 1/2 to 2 1/2"= 175 degrees F over 2 1/2"= 225 degrees F

POSITION
Position of Groove 1G **Fillet**
Vertical Progression ( )

ELECTRICAL CHARACTERISTICS
Transfer Mode (FCAW) **Short Circuiting** ( )
Globular ( ) **Spray** (X)
Current : **AC** ( ) **DCEP** (X) **DCEN** ( )
Pulsed ( )
OTHER :

TECHNIQUE
Stringer or Weave Bead Stringer
Multi-pass or Single Pass (per side) Multi
Number of Electrodes ONE
Electrode Spacing **Longitudinal**
Lateral
Angle

Contact Tube to Work Distance 1" stickout +/- 1/4"
Peening
Interpass Cleaning : hand or power tools

POSTWELD HEAT TREATMENT
Temp
Time

WELDING PROCEDURE

Pass or Weld Layer(s)	S	Filler Metals		Current		Volts	Travel Speed
		Class	Diameter	Type & Polartiy	Amps or Wire Feed Speed		
	SAW	ENi5	3/32"	DCEN	360 - 440	28 - 32	12.4 - 16.6

Joint Details

	Tolerance
Root = 0"	+ 1/16"
Face = > 1/2" - 1" = 1/4"	+ 1/4"
> 1" - 1 1/2" = 3/8"	+ 1/4"
> 1 1/2" - 2" = 1/2"	+ 1/4"
Angle = 60 degrees	+ 10 - 5

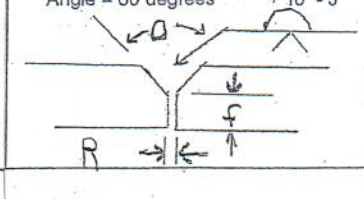

WELDING PROCEDURE SPECIFICATION (WPS) YES (X)
PREQUALIFIED _____ QUALIFIED BY TESTING ___X___
or PROCEDURE QUALIFICATION RECORD (PQR) YES ( )

Company Name ARC Ent. Inc.
Welding Process(es) SAW
Supporting PQR No.(s) ARC PQR # 45

Identification # ARC WPS 45a
Revision 3 **Date** 9/12/2014 **By** SVH
Authorized by **STEVE HOWARD** **Date** 6/8/2012
Type - Manual Semi - Automatic ( )
Machine ( ) Automatic (X)

DART Welder

JOINT DESIGN USED
Type FILLET
Single (X) Double Weld ( )
Backing ( ) NO
Backing Material
Root Opening 0 **Root Face Dimension**
Groove Angle NA **Radius (J-U)**
Back Gouging **Method**

BASE METALS
Material Spec A709
Type or Grade 50 50W HPS50W
Thickness **Groove** **Fillet** U
Diameter **(Pipe)**

FILLER METALS
AWS Specification A5.23 Lincoln LA-75
AWS Classification ENi1K-Ni1-H8

SHIELDING
Flux 960 **Gas**
Composition
Electrode - Flux (Class) **Flow Rate**
F8A2-ENi1K-Ni1 **Gas Cup Size**

Preheat up to 3/4" = 50 degrees 3/4" - 1 1/2" = 70 degrees
1 1/2" - 2 1/2" = 150 degrees Over 2 1/2" = 225 degrees F.

POSITION
Position of Groove **Fillet** 1F 2F
Vertical Progression ( )

ELECTRICAL CHARACTERISTICS
Transfer Mode (FCAW) **Short Circuiting** ( )
Globular ( ) **Spray** (X)
Current : **AC** ( ) **DCEP** **DCEN** (X)
Pulsed ( )
OTHER :

TECHNIQUE
Stringer or Weave Bead STRINGER
Multi-pass or Single Pass (per side) SINGLE
Number of Electrodes
Electrode Spacing **Longitudinal**
Lateral
Angle

Contact Tube to Work Distance 1 1/4" Stickout +/- 1/4"
Peening
Interpass Cleaning :

POSTWELD HEAT TREATMENT
Temp
Time

WELDING PROCEDURE

Pass or Weld Layer(s)	S	Filler Metals		Current		Volts	Travel Speed	Joint Details
		Class	Diameter	Type & Polartiy	Amps or Wire Feed Speed			
	SAW	ENi1K	3/32"	DCEN	360-440	28-32	12-16.2 ipm	
1	1/4"							
1	5/16"							
1	3/8"							

WELDING PROCEDURE SPECIFICATION (WPS) YES (X)
PREQUALIFIED ___ ___ QUALIFIED BY TESTING ___(X)___
or PROCEDURE QUALIFICATION RECORD (PQR) YES (x)

Company Name A.R.C. Ent. Inc.
Welding Process(es) SAW
Supporting PQR No.(s) ARC - PQR - 42

Identification # ARC WPS #42
Revision 3 **Date** 9/12/2014 **By** SVH
Autherized by **STEVE HOWARD** **Date** 12/10/2012
Type - Manual Semi - Automatic ( )
Machine ( ) Automatic (X)

JOINT DESIGN USED
Type FILLET
Single (X) Double Weld ( )
Backing ( ) NO (X)
Backing Material
Root Opening **Root Face Dimension**
Groove Angle **Radius (J-U)**
Back Gouging **Method**

BASE METALS
Material Spec A709
Type or Grade 36 50 50W HPS50W
Thickness **Groove** **Fillet** UNLIMITED
Diameter **(Pipe)**

FILLER METALS Lincoln I-61
AWS Specification A 5.23 A 5.17
AWS Classification EM12K

SHIELDING
Flux LINCOLN 960 **Gas**
Composition
Electrode - Flux (Class) **Flow Rate**
F7A2-EM12K **Gas Cup Size**

Preheat < 3/4" = 50 degrees 3/4" - 1 1/2" = 70 degrees
1 1/2" - 2 1/2" = 150 degrees Over 2 1/2" = 225 degrees F

POSITION
Position of Groove **Fillet** 1F 2F
Vertical Progression ( )

ELECTRICAL CHARACTERISTICS
Transfer Mode (FCAW) **Short Circuiting** ( )
Globular ( ) **Spray** (X)
Current : **AC** ( ) **DCEP** **DCEN** (X)
Pulsed ( )
OTHER :

TECHNIQUE
Stringer or Weave Bead STRINGER
Multi-pass or Single Pass (per side) SINGLE
Number of Electrodes -1
Electrode Spacing **Longitudinal**
Lateral
Angle

Contact Tube to Work Distance 1"1/4 STICKOUT +/_ 1/4"
Peening
Interpass Cleaning : hand and power tools

POSTWELD HEAT TREATMENT
Temp
Time

WELDING PROCEDURE

Pass or Weld Layer(s)	S	Filler Metals		Current		Volts	Travel Speed	Joint Details
		Class	Diameter	Type & Polartiy	Amps or Wire Feed Speed			
	5/16"	EM12K	5/32	DCEN	540-620	29.8 - 32	21 - 23.8	

WELDING PROCEDURE SPECIFICATION (WPS) YES (X)
PREQUALIFIED ____ QUALIFIED BY TESTING __(X)___
or PROCEDURE QUALIFICATION RECORD (PQR) YES (x)

Company Name ARC ENT. INC.
Welding Process(es) GMAW
Supporting PQR No.(s) ARC PQR 5M3-2

Identification # ARC WPS 5M3-2
Revision 1 **Date** 9/18/2013 **By** SVH
Autherized by **STEVE HOWARD** **Date** 5/14/2012
Type - Manual Semi - Automatic (X)
Machine ( ) Automatic ( )

JOINT DESIGN USED
Type FILLET
Single (X) Double Weld ( )
Backing ( ) NO
Backing Material
Root Opening 0 **Root Face Dimension**
Groove Angle **Radius (J-U)**
Back Gouging **Method**

BASE METALS
Material Spec A709
Type or Grade 36 50 50W
Thickness **Groove** **Fillet** UNLIMITED
Diameter **(Pipe)**

LINCOLN L-56
FILLER METALS
AWS Specification A5.18
AWS Classification ER70S-6

SHIELDING
Flux **Gas** 98/2
Composition 98Argon 2 oxygen
Electrode - Flux (Class) **Flow Rate** 36-52 cfh
Gas Cup Size 5/8"

Preheat up to 3/4" - 50 degress F 3/4"-1 1/2" - 70 degress F
1 1/2" - 2 1/2" - 150 degress
over 2 1/2" - 225 degress F

POSITION
Position of Groove **Fillet** 1F 2F
Vertical Progression ( )

ELECTRICAL CHARACTERISTICS
Transfer Mode (FCAW) **Short Circuiting** ( )
Globular ( ) **Spray** (X)
Current : **AC** ( ) **DCEP** (X) **DCEN** ( )
Pulsed ( )
OTHER :

TECHNIQUE
Stringer or Weave Bead STRINGER
Multi-pass or Single Pass (per side) SINGLE/MULTI
Number of Electrodes ONE
Electrode Spacing **Longitudinal**
Lateral
Angle

Contact Tube to Work Distance 5/8" - 3/4"
Peening
Interpass Cleaning : HAND AND POWER TOOLS

POSTWELD HEAT TREATMENT
Temp
Time

WELDING PROCEDURE

Pass or Weld Layer(s)	S	Filler Metals		Current		Volts	Travel Speed	Joint Details
		Class	Diameter	Type & Polartiy	Amps or Wire Feed Speed			
1	3/16"		.035"	DCEP	209-255	24.9-28.5	8.1-9.9 ipm	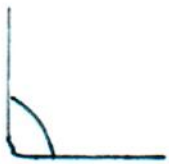
1	1/4"		.035"	DCEP	209-255	24.9-28.5	8.1-9.9 ipm	
1	5/16"		"	"	"	"	8.1-9.9 ipm	
2	3/8"		"	"	"	"	8.1-9.9 ipm	
3	7/16"		"	"	"	"	8.1-9 ipm	
3	1/2"		"	"	"	"	8.1-9 ipm	

No welds over 5/16" with this wire for 50W!

Welding Procedure Specification (wps) Yes (X)
PREQUALIFIED ___ QUALIFIED BY TESTING ___X___
or PROCEDURE QUALIFICATION RECORD (PQR) YES ( )

Company Name A.R.C. Enterprises, Inc.
Welding Process(es) SAW
Supporting PQR No.(s) ARC PQR # 45

Identification # ARC WPS #45
Revision 7 Date 5/1/2013 By SVH
Authorized by STEVE HOWARD Date 5/1/2013
Type - Manual Semi - Automatic ( )
Machine ( ) Automatic x

JOINT DESIGN USED

Type B-L2c-S
Single Double Weld (X)
Backing ( ) NO (X)
Backing Material
Root Opening 0" Root Face Dimension 1/4" min
Groove Angle 60 degrees Radius (J-U)
Back Gouging (YES) Method open

BASE METALS

Material Spec A709
Type or Grade 50W HPS50W
Thickness Groove U Fillet
Diameter (Pipe)

FILLER METALS

Lincoln LA-75
AWS Specification A5.23
AWS Classification ENi1K-Ni1-H8

SHIELDING

Flux 960 Lincoln Gas
Composition
Electrode - Flux (Class) Flow Rate
F8A2-ENi1K-Ni1-H8 Gas Cup Size

Preheat 3/4" = 50 degrees 3/4" - 1 1/2" = 70 degrees.
1 1/2" - 2 1/2" = 150 degrees Over 2 1/2" = 225 degrees F.

POSITION

Position of Groove 1G Fillet
Vertical Progression ( )

ELECTRICAL CHARACTERISTICS

Transfer Mode (FCAW) Short Circuiting ( )
Globular ( ) Spray (X)
Current : AC ( ), DCEP (X) DCEN ( )
Pulsed ( )
OTHER :

TECHNIQUE

Stringer or Weave Bead STRINGER
Multi-pass or Single Pass (per side) MULTI
Number of Electrodes ONE
Electrode Spacing Longitudinal
Lateral
Angle

Contact Tube to Work Distance 1"1/4 stickout +/-1/4"
Peening none
Interpass Cleaning : Hand or Power tools

POSTWELD HEAT TREATMENT

Temp

WELDING PROCEDURE Min. heat input=37.3 Kj/in. Max heat input= 70.4 Kj/in.

Pass or Weld Layer(s)	S	Filler Metals		Current		Volts	Travel Speed	Joint Details	
		Class	Diameter	Type & Polartiy	Amps or Wire Feed Speed				Tolerance
	SAW	ENi1K	3/32"	DCEP	360-440	28-32	14-16.2 ipm	Root = 0"	+ 1/16"
								Face = > 1/2" - 1" = 1/4"	+ 1/4"
								> 1" - 1 1/2" = 3/8"	+ 1/4"
								> 1 1/2" - 2" = 1/2"	+ 1/4"
								Angle = 60 degrees	+ 10 - 5

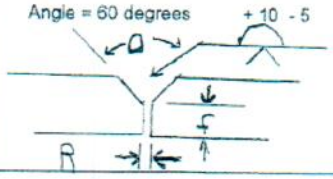

WELDING PROCEDURE SPECIFICATION (WPS) YES (X)
PREQUALIFIED __x___ QUALIFIED BY TESTING _____
or PROCEDURE QUALIFICATION RECORD (PQR) YES (x)

Company Name ARC Enterprises, Inc.
Welding Process(es) SMAW
Supporting PQR No.(s)

Identification # ARC WPS # 40
Revision 3 **Date** 6/8/2012 **By** SVH
Autherized by **STEVE HOWARD** **Date** 6/8/2012
Type - Manual (X) Semi - Automatic ( )
Machine ( ) Automatic ( )

JOINT DESIGN USED
Type Groove - repair
Single **Double Weld** ( )
Backing ( ) NO
Backing Material
Root Opening **Root Face Dimension**
Groove Angle 60 degrees **Radius (J-U)**
Back Gouging **Method**

BASE METALS
Material Spec A709
Type or Grade 36 50 50W
Thickness **Groove** unlimited **See below**
Diameter **(Pipe)**

FILLER METALS
AWS Specification A5.5
AWS Classification E8018-C3-H4R

SHIELDING
Flux **Gas**
Composition
Electrode - Flux (Class) **Flow Rate**
Gas Cup Size

pre-heat up to 3/4"=50 degrees F 3/4"-1 1/2" = 70 degrees F
70 degrees F when steel temp is equal to or less than 0 degrees F.
1 1/2" - 2 1/2" = 150degrees F over 2 1/2" = 225 degrees F

POSITION
Position of Groove horizontal **Fillet**
Vertical Progression ( )

ELECTRICAL CHARACTERISTICS
Transfer Mode (FCAW) **Short Circuiting** ( )
Globular ( ) **Spray**
Current : **AC** ( ) **DCEP** (X) **DCEN** ( )
Pulsed ( )
OTHER :

TECHNIQUE
Stringer or Weave Bead stringer
Multi-pass or Single Pass (per side) multi-pass
Number of Electrodes
Electrode Spacing **Longitudinal**
Lateral
Angle
Contact Tube to Work Distance
Peening
Interpass Cleaning :

POSTWELD HEAT TREATMENT
Temp
Time

WELDING PROCEDURE

Pass or Weld Layer(s)	S	Filler Metals		Current		Volts	Travel Speed	Joint Details
		Class	Diameter	Type & Polartiy	Amps or Wire Feed Speed			
1 or more		E8018-C3	1/8"	DCEP	90 - 160	variable	8 ipm	
Weld layers	Flat = 1/8" V O & H = 3/16"		per 4.6.7					
								Run-off tabs requir d M.T. repair

ARC ENTERPRISES, INC.
STEEL FABRICATION
AISC CERTIFIED FABRICATOR
PHONE: 207.265.2646 • FAX: 207.265.4054 WWW.ARCENTERPRISESINC.COM

Heat Cambering and Straightening Procedure

Purpose: This procedure describes the method for heat cambering and straightening.

Responsibility: Production Manager

Procedure:

- Method of heating: #12 heating tip. Both sides shall be heated simultaneously.
  Gas / Oxygen: 18 – 31 psi – oxygen. 8 – 15 psi – gas.
  Heat range is 1,100 minimum to 1,125 maximum degrees Fahrenheit. Appropriate temp sticks shall be used to verify the above temperature requirements are met. The surface temperature of the heated areas shall be tested with the appropriate temp stick approximately ten (10) seconds after removal of the heat source. Temperatures exceeding 1,200 degrees Fahrenheit may be cause for rejection.
- Members to be heat cambered shall be supported at each end with the compression flange down.
- Heating patterns shall be equally spaced along the length of the girder. Heating shall begin at the midpoint of the girder and shall alternate either side of the girder midpoint working toward the ends of the girder.
- Web heating progression shall be according to the "half lap" technique. Once started, each heat pattern shall be carried on to completion without interruption. Each heat pattern shall be heated only once. Two (2) torches are to be used – one on each side of the girder web.

Flange heating procedure:

- Upon completing the web portion, heating of the flange areas shall commence without pause, also using the "half lap" technique. The flanges shall be concurrently heated top and bottom on each side of the flange centerline, heating from the web centerline toward the outside edge of the flange. Each flame heat shall alternate starting point from one side of the web centerline to the other side, reducing the possibility of sweep induction.
- After heat cambering, the heat patterns shall be allowed to cool in still air to 600 degrees Fahrenheit. If necessary, compressed air may be used to cool the beam below 600 degrees Fahrenheit.
- If the required camber has not been achieved, additional heat points shall be located evenly throughout the length of the girder at locations which have not been previously heated.
- All heating shall be carried out in the presence of the QA Inspector.

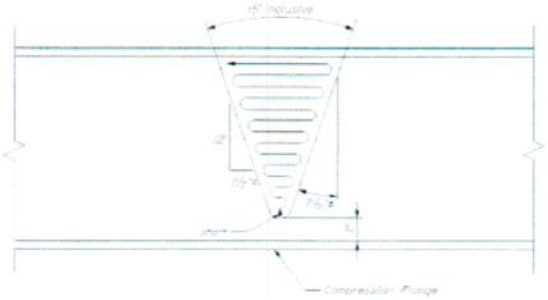

ARC ENTERPRISES, INC.
STEEL FABRICATION
AISC CERTIFIED FABRICATOR
PHONE: 207.265.2646 • FAX: 207.265.4054 WWW.ARCENTERPRISESINC.COM

Heat Straightening Procedure

Purpose:

This procedure describes the method for heat straightening beams.

Responsibility: Production Manager

Procedure:

- Method of heating: #12 heating tip. Both sides shall be heated simultaneously.
  Gas / Oxygen: 18 – 31 psi (oxygen). 8 – 15 psi (gas).
  Heat range is 1,100 minimum to 1,125 maximum degrees Fahrenheit. Appropriate temp sticks shall be used to verify the temperature requirements are met. The surface temperature of the heated areas shall be tested with the appropriate temp stick approximately ten (10) seconds after removal of the heat source. Temperatures exceeding 1,200 degrees Fahrenheit may be cause for rejection.
- Members to be heat straightened shall be supported at each end (with sweep up) and shall be blocked to prevent excess movement.
- Heat patterns shall be placed from midpoint working toward both ends of the girder.

Flange heating procedure:
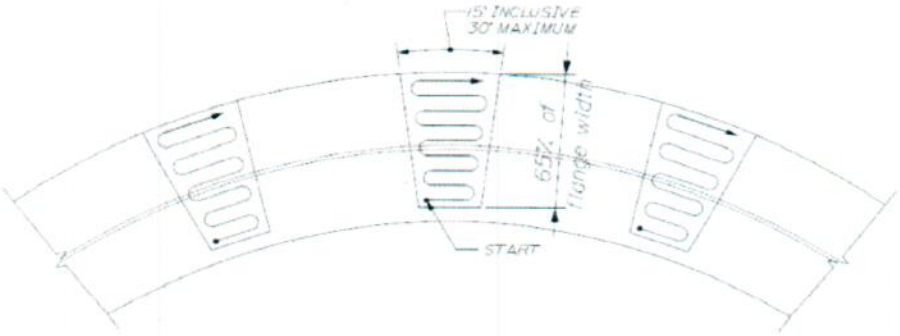
- Two (2) torches shall be used, concurrently heating both sides of the flange, starting at the inside of the sweep and working across the flange using the "half lap" technique.
- After heat straightening, the heat patterns shall be allowed to cool in still air to 600 degrees Fahrenheit. If necessary, compressed air may be used to cool the steel below 600 degrees Fahrenheit.
- If the required straightness has not been achieved, additional heat points shall be located evenly throughout the length of the girder at locations which have not been previously heated.
- All heat straightening shall be carried out in the presence of the QA Inspector.