CONSTRUCTION LEADERS

LETTER OF TRANSMITTAL			
DATE:	**February 19, 2015**	PCL JOB NO:	**5515002**
ATTN:	**Chris Barker**	TRANSMITTAL NO:	**011**

To: **State of Vermont Agency of Transportation**
One National Life Drive
Montpelier, VT 05633-5001
(802) 828-0053

Re: Hartford Lateral Slide
Project No.: IM 091-2(79)
Contract ID.: 12A132 County: Windsor PCL FILE NO: 5515002-9

WE ARE SENDING **X** Attached ____ Under separate cover via **Email & SP** the following:
X Shop drawings ____ Prints ____ Plans ____ Samples ____ Specifications
____ Copy of Letter ____ Change Order ____ Other

COPIES	SPEC.	REVISION	DESCRIPTION
1	**507.03.b**		**Bridge 43N Reinforcing Steel Fabrication Drawings**

TRANSMITTED for as checked below:

X For approval ____ Approved as submitted ____ Resubmit **1** Copies for approval
____ For your use ____ Approved as noted ____ Submit ____ Copies for distribution
____ As requested ____ Returned for corrections ____ Return ____ Corrected prints
____ For review and comment

Remarks:

Please return an email of this approved submittal to Erich Heymann (ewheymann@pcl.com) and Jeremy Mackling (jmackling@pcl.com).

We request the review and return of this submittal within 14 days. The fabrication of reinforcing steel is required early in the project and is critical to the construction schedule. Please advise if this request cannot be met so we can plan accordingly.

By: **Erich Heymann,** Project Engineer

COPY TO: Project Files

CONSTRUCTION LEADERS

SUBMITTAL NO. : 009
Bridge 43N Reinforcing Steel Fabrication Drawings

Item No.	Specification	Description
1	507.03.b	Bridge 43N Reinforcing Steel Fabrication Drawings

PROJECT:
HARTFORD LATERAL SLIDE
PROJECT NO.: IM 091-2(79)
CONTRACT ID.: 12A132

OWNER:
STATE OF VERMONT AGENCY OF TRANSPORTATION

ENGINEER OF RECORD:
STATE OF VERMONT AGENCY OF TRANSPORTATION

CONTRACTOR:
PCL CIVIL CONSTRUCTORS, INC.

FEBRUARY 19, 2015

3810 Northdale Blvd., Suite 200; Tampa, FL • (813) 264-9500 • (813) 264-6689 (fax)

Canaan Office:
450 U.S. Route 4
Canaan, NH 03741
Phone: 603-632-5222
800-876-5767
Fax: 603-632-6066

TRANSMITTAL

DATE: **2/12/2015**

BARKER JOB # **33505535**

TO: **PCL CIVIL CONSTRUCTORS**

JOB REF: **BRIDGE 43S**

ATTN: **JEREMY**

PHONE #:

EXT:

WE ARE SENDING YOU THE ATTACHED VIA:

☐ US Mail ☐ UPS ☐ FedEx ☐ Other _____ ☐ Ground Service ☐ 2nd. Day ☐ Overnight ☐ CPU

NUMBER of COPIES	DRAWING NUMBER	REV #	DRAWING COVERS	SENT FOR CODE
1	R01N		ABUTMENT 3 AND W-WALLS 5&6	1
1	R02N		ABUTMENT 4 AND W-WALLS 7&8	1
1	R03N		RETAINING WALLS 5-6	1
1	R04N		DECK REINF.	1
1	R05N		APPROACH SLABS AND BACKWALLS	1
1	R06N		BAR LISTS	1

REMARKS: E-COPY SENT

SENT FOR CODE:
1. APPROVAL
2. FINAL APPROVAL
3. FINAL APPROVAL & JOB USE
4. RECORD COPY & JOB USE
5. JOB USE

*

CC:

Please notify all personnel involved in this project to direct all questions and or problems regarding detailed drawings and releasing of steel for fabrication to:

Chris Sample

Canaan Construction Services

1/28/2013

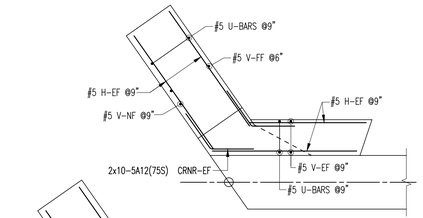

SECTION ABOVE SEAT

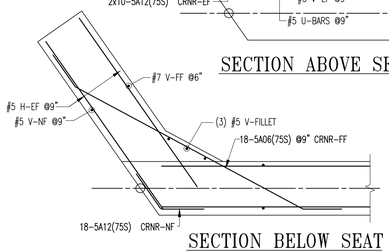

SECTION BELOW SEAT

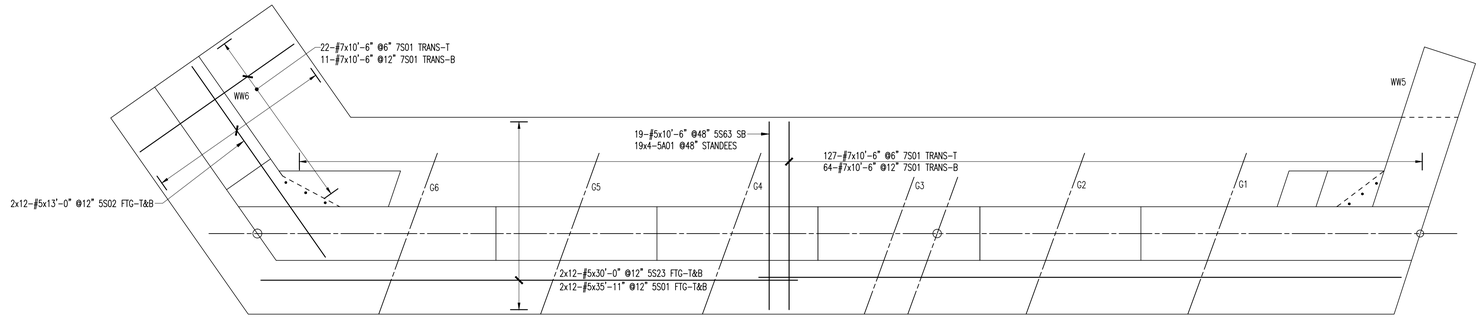

ABUTMENT 3 FOOTING REINFORCEMENT

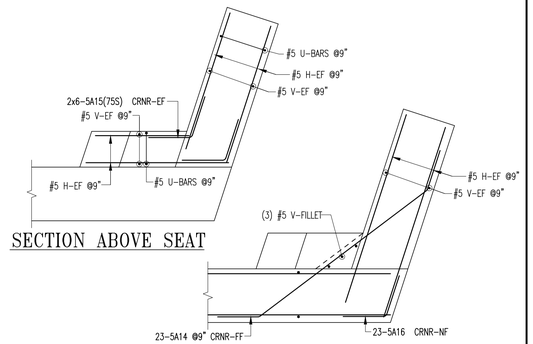

SECTION ABOVE SEAT

SECTION BELOW SEAT

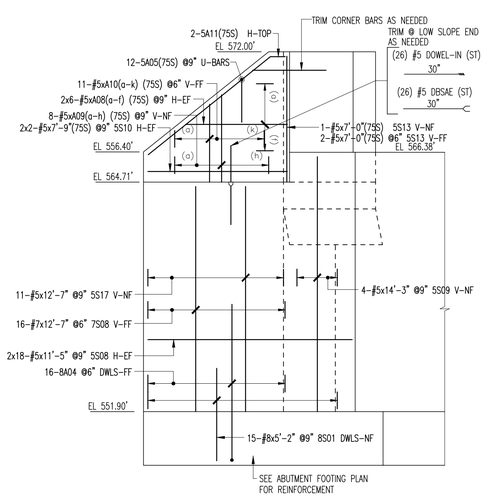

WINGWALL 6 (WW6) ELEVATION

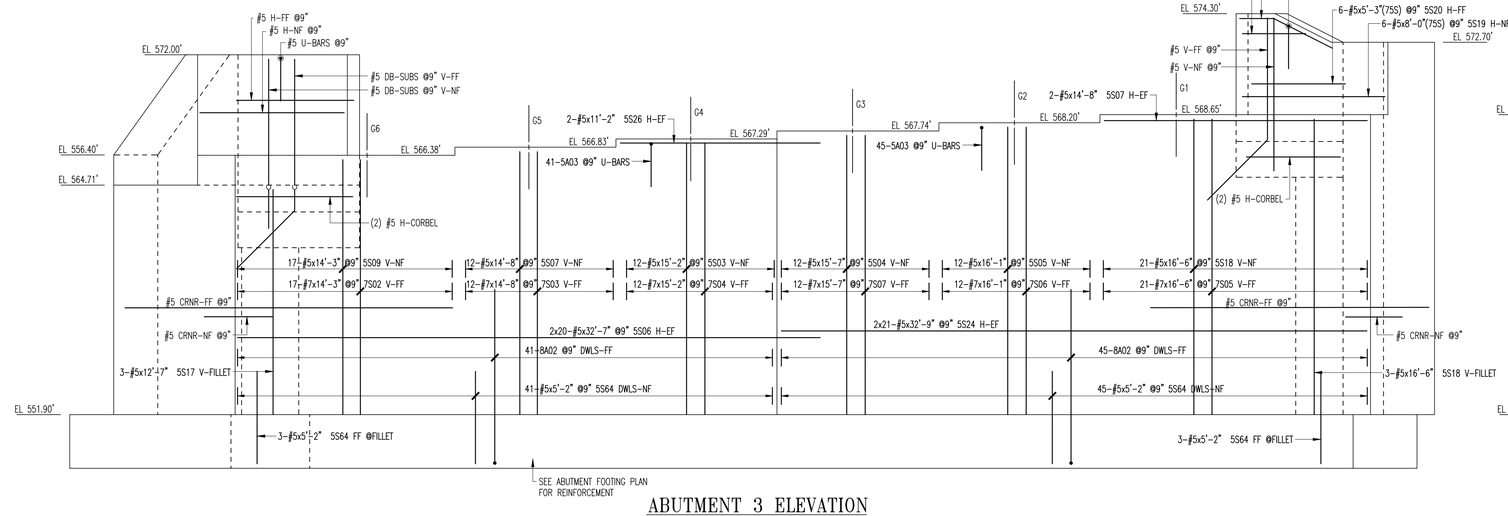

ABUTMENT 3 ELEVATION

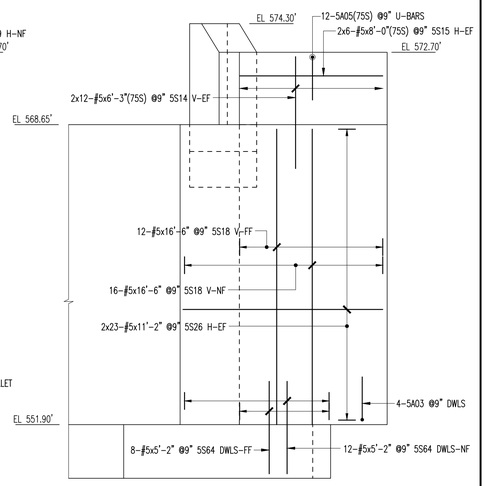

WINGWALL 5 (WW5) ELEVATION

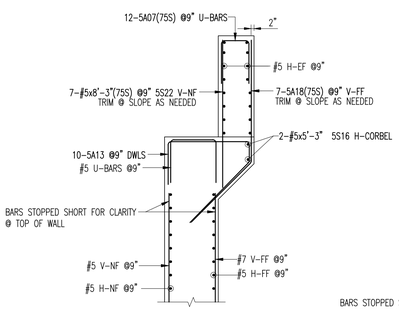

CHEEKWALL @ (WW5) SECTION

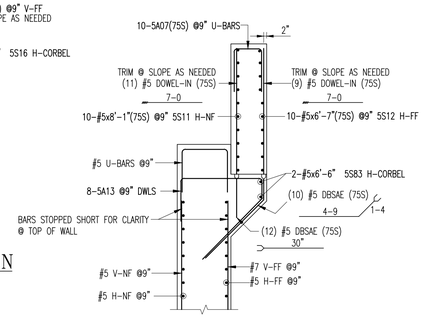

CHEEKWALL @ (WW6) SECTION

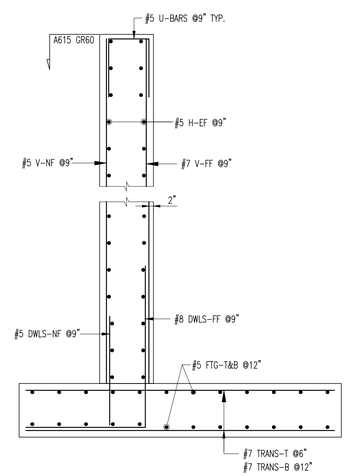

ABUTMENT 3 WALL REINF. SECTION

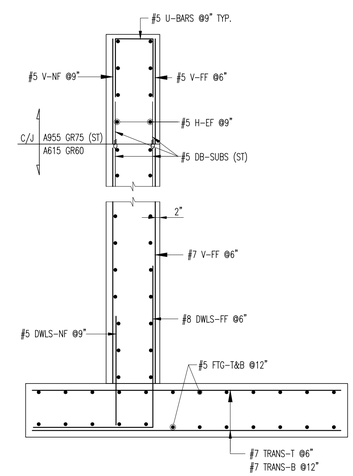

WINGWALL 6 REINF. SECTION

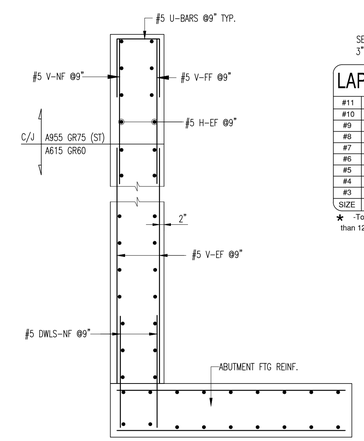

WINGWALL 5 REINF. SECTION

SEE SHEET R06S FOR BAR LISTS
3" CLR COVER U.N.O.

LAP CHART-U.N.O.

SIZE	TOP BARS ★	OTHER BARS
#11		
#10		
#9		
#8	54"	54"
#7	41"	41"
#6	31"	31"
#5	26"	26"
#4		
#3		

★ -Top bars are horiz. bars with more than 12" of concrete cast below the bars.

ALL MATERIAL ON THIS DRAWING SHALL BE ASTM A615 GRADE 60 U.N.O.

ALL MATERIAL ON THIS DRAWING NOTED AS (75S) SHALL BE ASTM "2304" GR75 STAINLESS STEEL

No.	Description	Date	By
1	APPROVAL PRINT	02/18/15	CPS

Revisions and Issue Record

The full intent and purpose of this drawing is the placing of reinforcing steel bars ONLY. It is NOT to be used as a means of communication between the Architect, Engineer, Contractor or any other Sub-trades.

THIS DRAWING IS NOT TO BE SCALED.

HarrisRebar Barker Steel — National Strength. Local Service.

DETAILED AT:
CANAAN
NEW HAMPSHIRE

Project: HARTFORD LATERAL BRIDGE I-91 NORTHBOUND

Drawing: ABUTMENT 3 W/ WINGWALLS 5&6 REINFORCEMENT

Customer: PCL CIVIL CONSTRUCTORS

Engineer: G. LAROCHE

Refer to Release:

Date	Drawn	Chkd.	JOB No.	Dwg. No.
02/10/15	CPS		33505535	R01N

W:\csample\Projects\33505535\Placing Drawings\DWGs\R01N.dwg

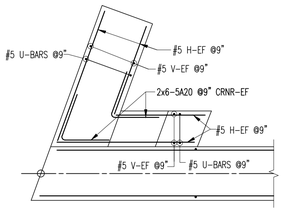

SECTION ABOVE SEAT

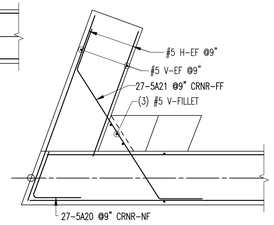

SECTION BELOW SEAT

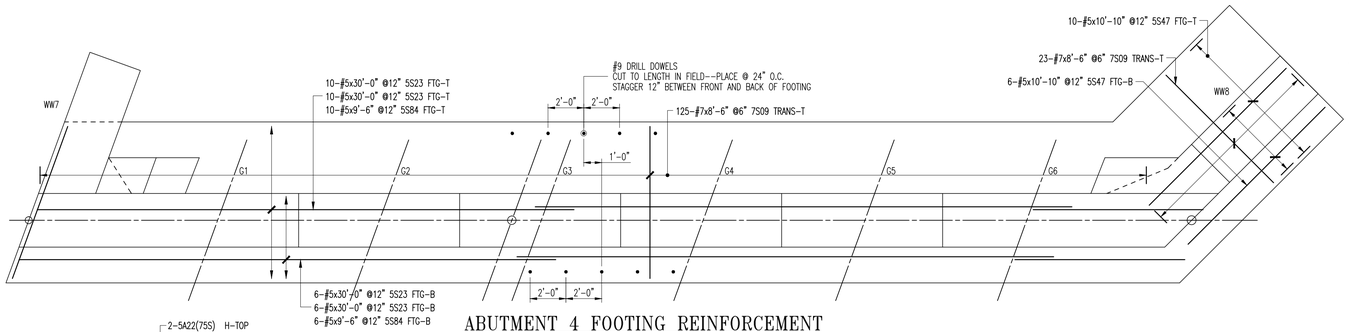

ABUTMENT 4 FOOTING REINFORCEMENT

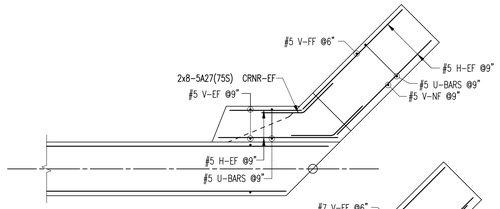

SECTION ABOVE SEAT

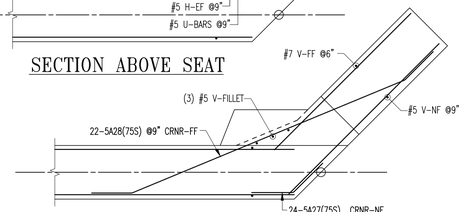

SECTION BELOW SEAT

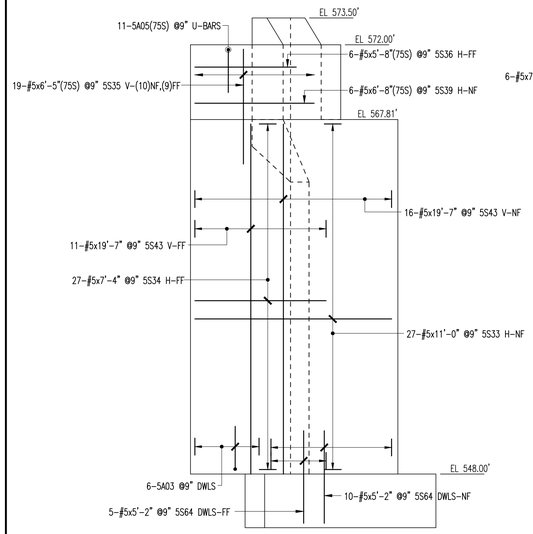

WINGWALL 7 (WW7) ELEVATION

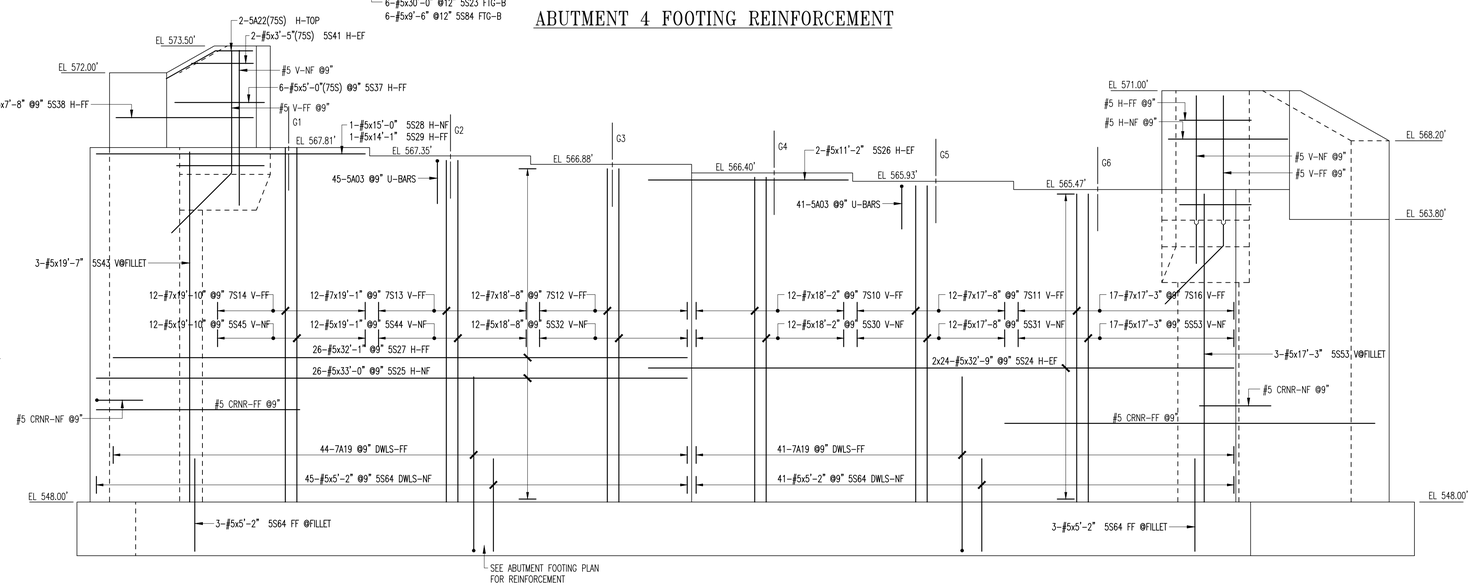

ABUTMENT 4 ELEVATION

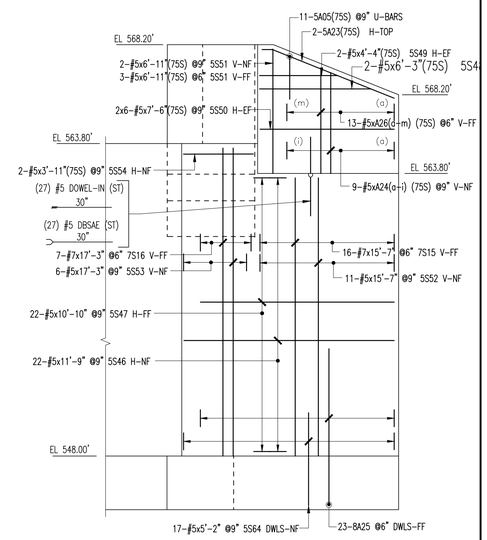

WINGWALL 8 (WW8) ELEVATION

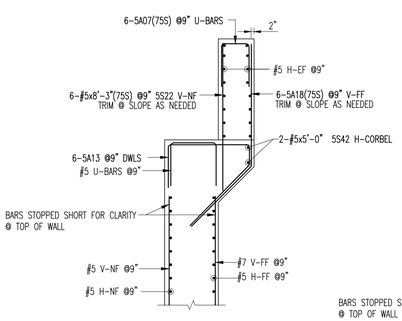

CHEEKWALL @ (WW7) SECTION

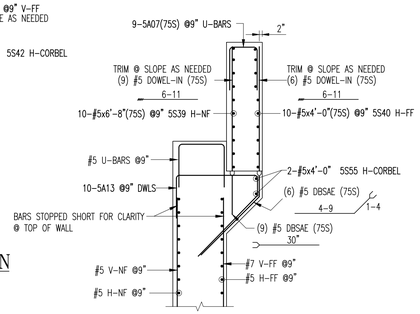

CHEEKWALL @ (WW8) SECTION

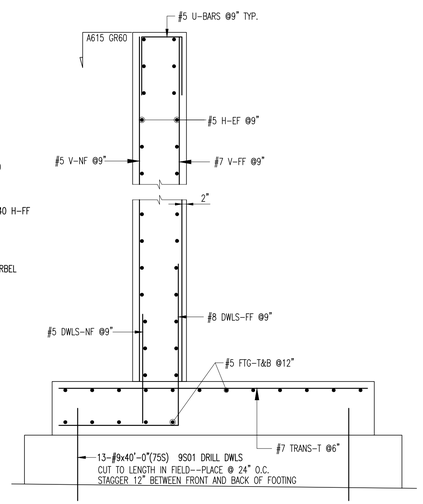

ABUTMENT 4 WALL REINF. SECTION

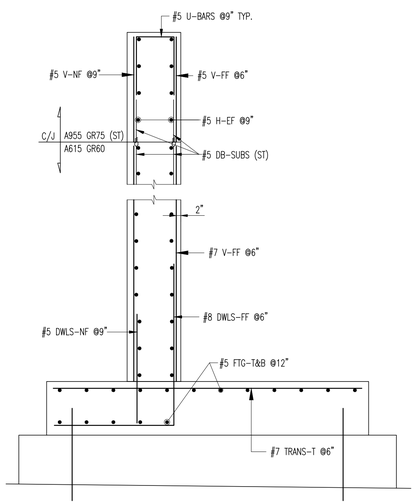

WINGWALL 8 REINF. SECTION

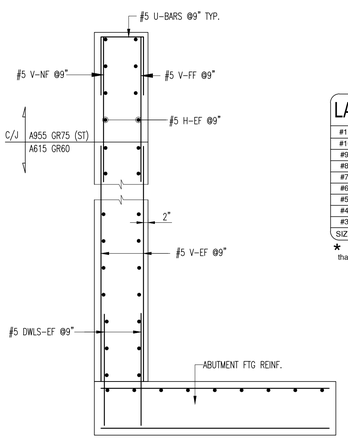

WINGWALL 7 REINF. SECTION

SEE SHEET R06S FOR BAR LISTS
3" CLR COVER U.N.O.

LAP CHART-U.N.O.

SIZE	TOP BARS ★	OTHER BARS
#11		
#10		
#9		
#8	54"	54"
#7	41"	41"
#6	31"	31"
#5	26"	26"
#4		
#3		

★ -Top bars are horiz. bars with more than 12" of concrete cast below the bars.

ALL MATERIAL ON THIS DRAWING SHALL BE ASTM A615 GRADE 60 U.N.O.

ALL MATERIAL ON THIS DRAWING NOTED AS (75S) SHALL BE ASTM "2304" GR75 STAINLESS STEEL

No.	Description	Date	By
1	APPROVAL PRINT	02/18/15	CPS

Revisions and Issue Record

The full intent and purpose of this drawing is the placing of reinforcing steel bars ONLY. It is NOT to be used as a means of communication between the Architect, Engineer, Contractor or any other Sub-trades.

THIS DRAWING IS NOT TO BE SCALED.

HarrisRebar Harlan Steel — National Strength. Local Service.

DETAILED AT:
CANAAN
NEW HAMPSHIRE

Project: HARTFORD LATERAL BRIDGE
I-91 NORTHBOUND

Drawing: ABUTMENT 4 W/ WINGWALLS
7&8 REINFORCEMENT

Customer: PCL CIVIL CONSTRUCTORS

Engineer: G. LAROCHE

Refer to Release:

Date	Drawn	Chkd.	JOB No.	Dwg. No.
02/10/15	CPS		33505535	R02N

W:\csample\Projects\33505535\Placing Drawings\DWGs\R01N.dwg

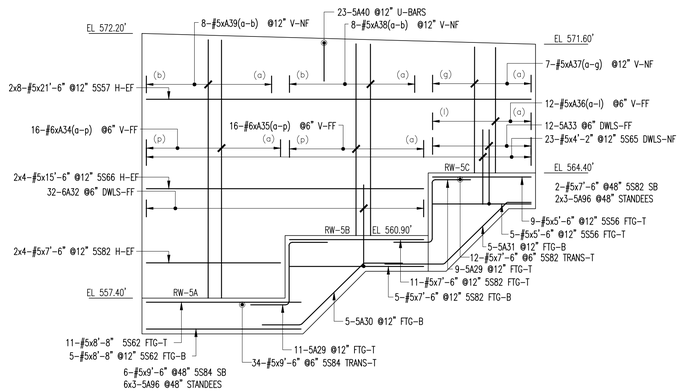

RETAINING WALL 5 (RW5) ELEVATION

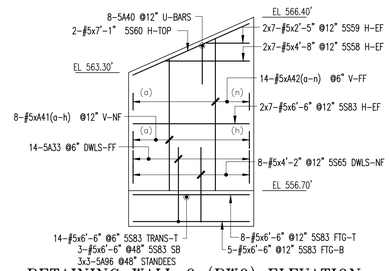

RETAINING WALL 6 (RW6) ELEVATION

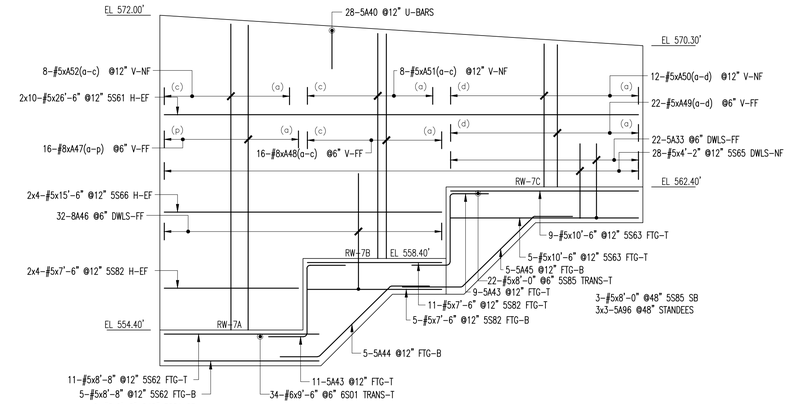

RETAINING WALL 7 (RW7) ELEVATION

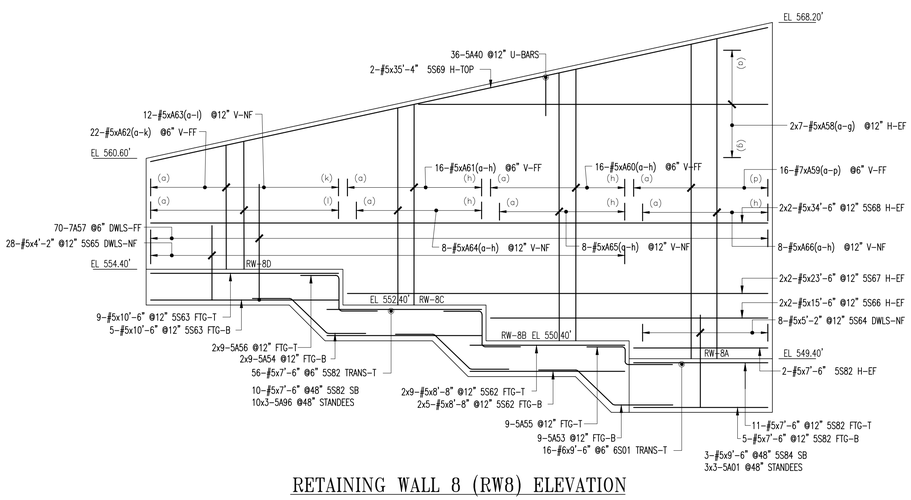

RETAINING WALL 8 (RW8) ELEVATION

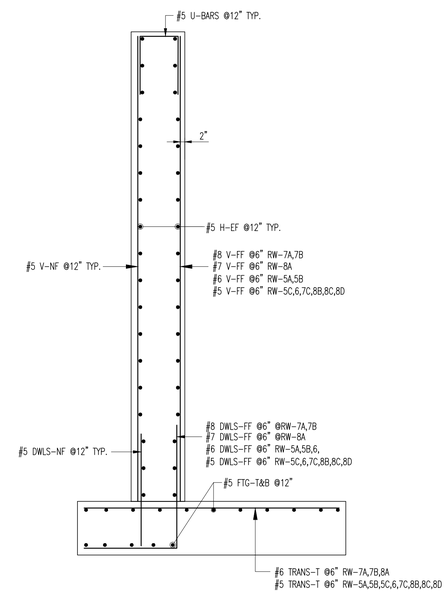

TYYPICAL RETAINING WALL REINFORCEMENT SECTION

ALL MATERIAL ON THIS DRAWING SHALL BE ASTM A615 GRADE 60 U.N.O.

SEE SHEET R06S FOR BAR LISTS
3" CLR COVER U.N.O.

LAP CHART-U.N.O.

SIZE	TOP BARS ★	OTHER BARS
#11		
#10		
#9		
#8	54"	54"
#7	41"	41"
#6	31"	31"
#5	26"	26"
#4		
#3		

★ -Top bars are horiz. bars with more than 12" of concrete cast below the bars.

No.	Description	Date	By
1	APPROVAL PRINT	02/18/15	CPS

Revisions and Issue Record

The full intent and purpose of this drawing is the placing of reinforcing steel bars ONLY. It is NOT to be used as a means of communication between the Architect, Engineer, Contractor or any other Sub-trades.

THIS DRAWING IS NOT TO BE SCALED.

HarrisRebar Barker Steel
National Strength. Local Service.

DETAILED AT:
CANAAN
NEW HAMPSHIRE

Project: HARTFORD LATERAL BRIDGE
I-91 NORTHBOUND

Drawing: RETAINING WALLS
5-8 REINFORCEMENT

Customer: PCL CIVIL CONSTRUCTORS

Engineer: G. LAROCHE

Refer to Release:

Date	Drawn	Chkd.	JOB No.	Dwg. No.
02/10/15	CPS		33505535	R03N

W:\csample\Projects\33505535\Placing Drawings\DWGs\R01N.dwg

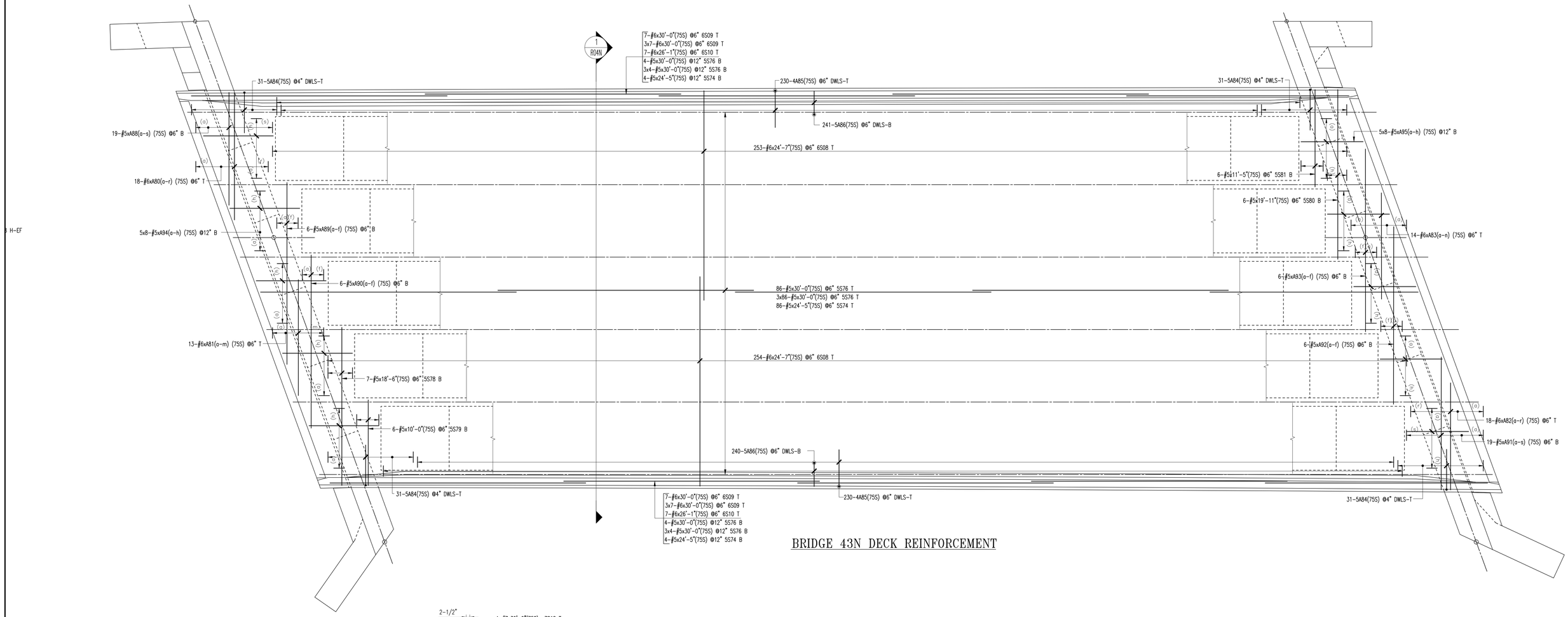

BRIDGE 43N DECK REINFORCEMENT

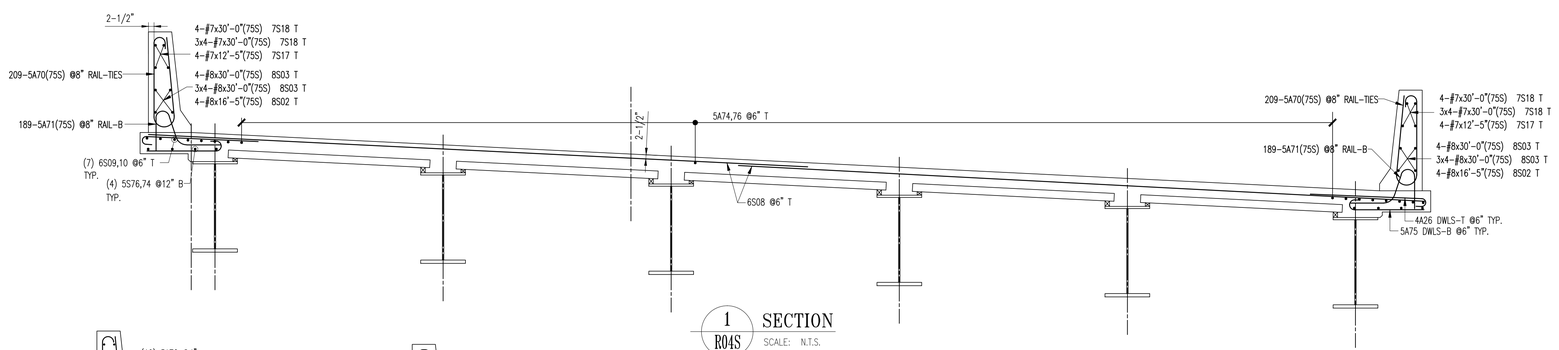

1 R04S SECTION
SCALE: N.T.S.

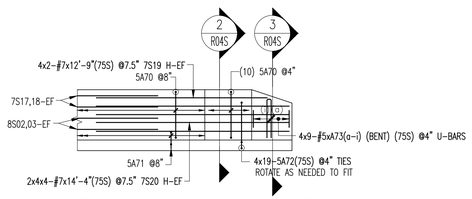

RAIL END TRANSITIONS ELEVATION

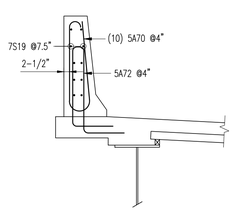

2 R04S SECTION
SCALE: N.T.S.

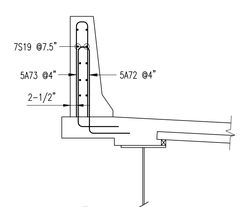

3 R04S SECTION
SCALE: N.T.S.

LAP CHART-U.N.O.

SIZE	TOP BARS ★	OTHER BARS
#11		
#10		
#9		
#8	55"	55"
#7	43"	43"
#6	31"	31"
#5	26"	26"
#4		
#3		

★ -Top bars are horiz. bars with more than 12" of concrete cast below the bars.

SEE SHEET R06S FOR BAR LISTS
3" CLR COVER U.N.O.

ALL MATERIAL ON THIS DRAWING NOTED AS (75S) SHALL BE ASTM "2304" GR75 STAINLESS STEEL

No.	Description	Date	By
1	APPROVAL PRINT	02/18/15	CPS

Revisions and Issue Record

The full intent and purpose of this drawing is the placing of reinforcing steel bars ONLY. It is NOT to be used as a means of communication between the Architect, Engineer, Contractor or any other Sub-trades.

THIS DRAWING IS NOT TO BE SCALED.

HarrisRebar Barker Steel — National Strength. Local Service.

DETAILED AT:
CANAAN
NEW HAMPSHIRE

Project: HARTFORD LATERAL BRIDGE
I-91 NORTHBOUND

Drawing: DECK AND RAILS
REINFORCEMENT

Customer: PCL CIVIL CONSTRUCTORS

Engineer: G. LAROCHE

Refer to Release:

Date	Drawn	Chkd.	JOB No.	Dwg. No.
02/10/15	CPS		33505535	R04N

W:\csample\Projects\33505535\Placing Drawings\DWGs\R01N.dwg

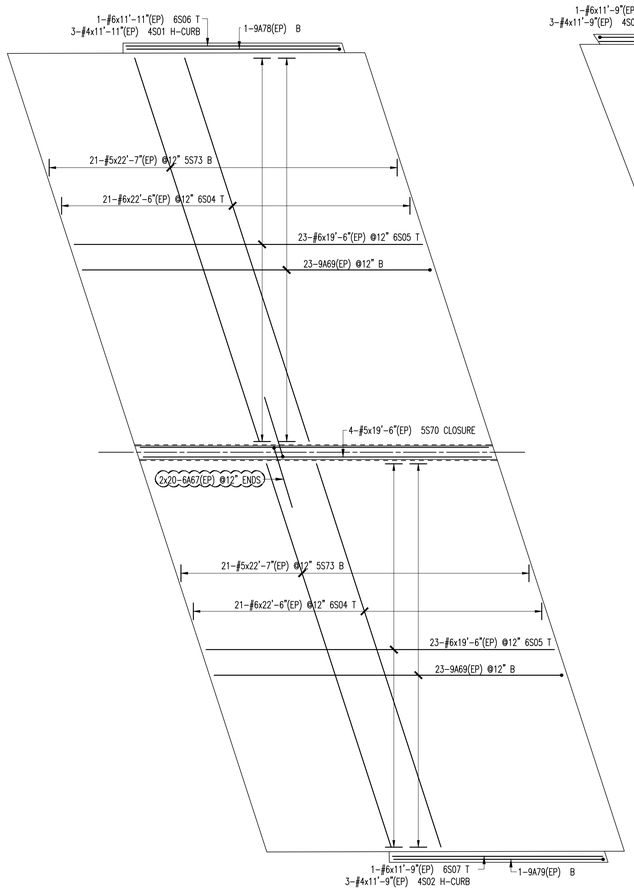

ABUTMENT 3 APPROACH SLAB

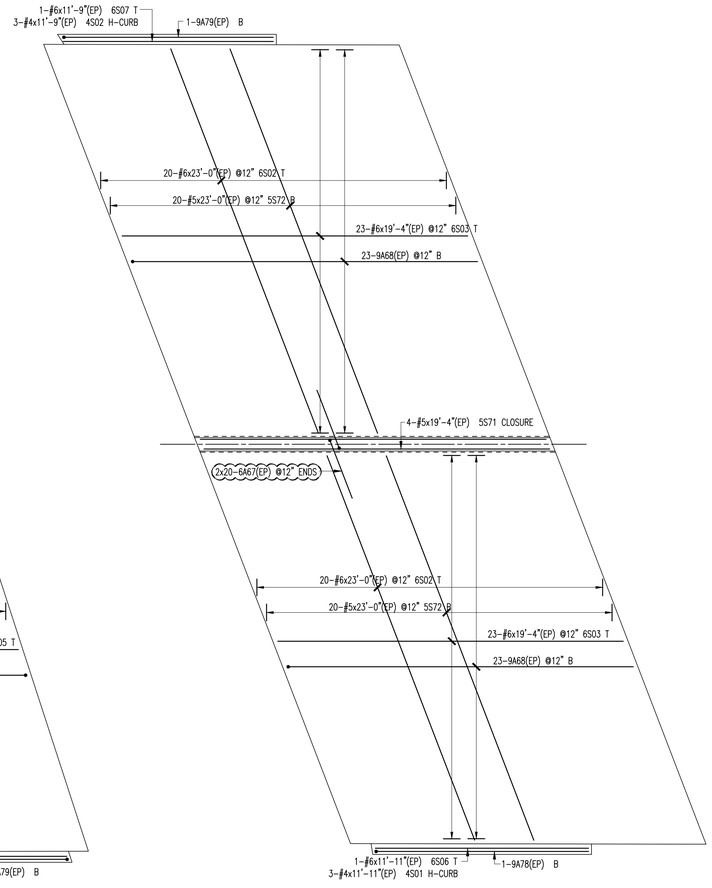

ABUTMENT 4 APPROACH SLAB

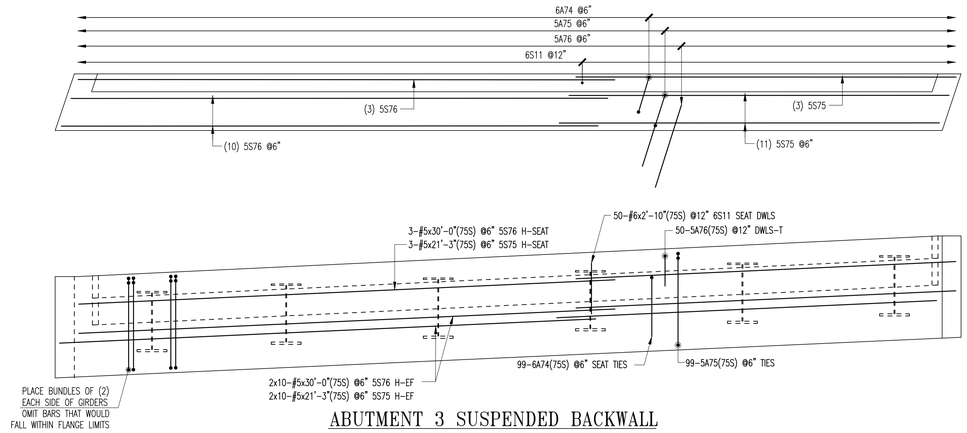

ABUTMENT 3 SUSPENDED BACKWALL

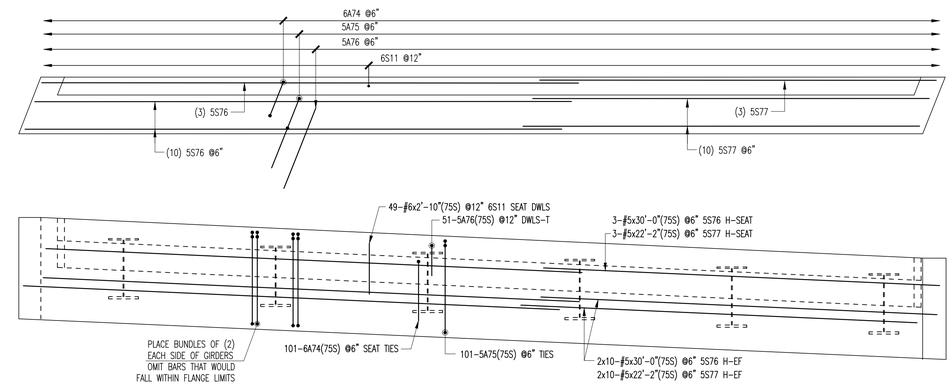

ABUTMENT 4 SUSPENDED BACKWALL

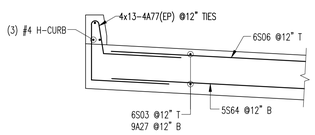

TYPICAL APPROACH SLAB @ CURB

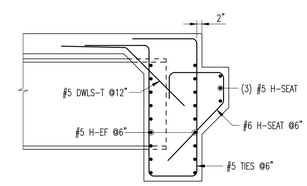

TYPICAL SUSPENDED BACKWALL SECTION

SEE SHEET R06S FOR BAR LISTS
3" CLR COVER U.N.O.

LAP CHART-U.N.O.

SIZE	TOP BARS ★	OTHER BARS
#11		
#10		
#9		
#8	54"	54"
#7	41"	41"
#6	31"	31"
#5	26"	26"
#4		
#3		

★ -Top bars are horiz. bars with more than 12" of concrete cast below the bars.

ENG. AND ARCH. PLEASE VERIFY ALL CLOUDED AREAS

ALL MATERIAL ON THIS DRAWING NOTED AS (75S) SHALL BE ASTM "2304" GR75 STAINLESS STEEL

ALL MATERIAL ON THIS DRAWING NOTED AS (EP) SHALL BE ASTM A1055 GR60 "DUAL COATED" REINF.

No.	Description	Date	By
1	APPROVAL PRINT	02/18/15	CPS

Revisions and Issue Record

The full intent and purpose of this drawing is the placing of reinforcing steel bars ONLY. It is NOT to be used as a means of communication between the Architect, Engineer, Contractor or any other Sub-trades.

THIS DRAWING IS NOT TO BE SCALED.

HarrisRebar Barker Steel — National Strength. Local Service.

DETAILED AT:
CANAAN
NEW HAMPSHIRE

Project: HARTFORD LATERAL BRIDGE
I-91 NORTHBOUND

Drawing: APPROACH SLABS AND BACKWALLS REINF.

Customer: PCL CIVIL CONSTRUCTORS

Engineer: G. LAROCHE

Refer to Release:

Date	Drawn	Chkd.	JOB No.	Dwg. No.
02/10/15	CPS		33505535	R05N

W:\csample\Projects\33505535\Placing Drawings\DWGs\R01N.dwg

Drawing Sheet : R01N — BAR LIST

Bar Mark	Qty	Size	Total Length	Type	'A'	'B'	'C'	'D'	'E'	'F'	'G'	'H'	'J'	'K'	'O'	'R'
S523	24	#5	30'-0"			30'-0"										
S501	24	#5	35'-11"			35'-11"										
S502	24	#5	13'-0"			13'-0"										
7501	224	#7	10'-6"			10'-6"										
S503	19	#5	10'-6"			10'-6"										
S401	76	#5	8'-5 K"	25		1'-6"	2'-3 K"	10"	2'-3 K"	1'-6"			2'-3"		1'-1 K"	
8402	86	#8	15'-3"	17		5'-6"	9'-9"									
S504	112	#5	5'-2"			5'-2"										
7502	17	#7	14'-3"			14'-3"										
7503	12	#7	14'-8"			14'-8"										
7504	12	#7	15'-2"			15'-2"										
7507	12	#7	15'-7"			15'-7"										
7506	12	#7	16'-1"			16'-1"										
7505	21	#7	16'-6"			16'-6"										
S509	21	#5	14'-3"			14'-3"										
S507	14	#5	14'-8"			14'-8"										
S503	12	#5	15'-2"			15'-2"										
S504	12	#5	15'-7"			15'-7"										
S505	12	#5	16'-1"			16'-1"										
S518	52	#5	16'-6"			16'-6"										
S506	40	#5	32'-7"			32'-7"										
S524	42	#5	32'-9"			32'-9"										
S526	48	#5	11'-2"			11'-2"										
S403	49	#5	7'-5"	17		2'-5"	2'-7"	2'-5"								
S508	36	#5	11'-5"			11'-5"										
8404	16	#8	14'-3"	17		5'-6"	8'-9"									
8501	15	#8	5'-2"			5'-2"										
S517	14	#5	12'-7"			12'-7"										
7508	16	#7	12'-7"			12'-7"										
S510	4	#5	7'-9"			7'-9"										
S405	24	#5	7'-5"	17		2'-5"	2'-7"	2'-5"								
S511	10	#5	8'-1"			8'-1"										
S512	10	#5	6'-7"			6'-7"										
S407	22	#5	6'-5"	17		2'-5"	1'-7"	2'-5"								
A08a	2	#5	2'-10"			2'-10"										
Varies To																
A08f	2	#5	7'-7"			7'-7"										
S513	3	#5	7'-0"			7'-0"										
A10a	1	#5	2'-9"			2'-9"										
Varies To																
A10k	1	#5	6'-9"			6'-9"										
A20a	1	#5	2'-9"			2'-9"										
Varies To																
A09h	1	#5	6'-11"			6'-11"										
S411	2	#5	9'-7"	3		8'-9 K"	10"					6 K"		7 K"	9'-4 K"	
S412	38	#5	4'-9 K"	3		2'-5"	2'-4 K"					2'-0"		1'-4"	3'-9"	
S583	2	#5	6'-6"			6'-6"										
S413	18	#5	12'-11"	16	2'-5"	4'-7"	1'-2"	4'-9"				3'-4 K"		3'-4 K"	4'-6 K"	
S406	18	#5	18'-9 K"	22			2'-2"	14'-5 K"	2'-2"			1'-K"		1'-K"	18'-3"	
S514	24	#5	6'-3"			6'-3"										
S515	12	#5	8'-0"			8'-0"										
S415	12	#5	4'-10"	3		2'-5"	2'-5"					2'-3 K"		8 K"	3'-1 K"	
S516	2	#5	5'-3"			5'-3"										
S414	23	#5	16'-5 K"	22			2'-4"	11'-9 K"	2'-4"			1'-5 K"		1'-4 K"	15'-6 K"	
S416	23	#5	4'-10"	3		2'-5"	2'-5"					2'-3 K"		8 K"	3'-1 K"	
S522	7	#5	8'-3"			8'-3"										
S521	2	#5	3'-7"			3'-7"										
S417	2	#5	5'-7"	3		3'-8"	1'-11"					11"		1'-8 K"	5'-4 K"	
S519	6	#5	8'-0"			8'-0"										
S520	6	#5	5'-3"			5'-3"										
S418	7	#5	11'-7"	3		6'-10"	4'-9"					3'-4 K"		3'-3 K"	10'-1 K"	

ABUTMENT 1 AND WING WALLS 1&2

Drawing Sheet : R02N — BAR LIST

Bar Mark	Qty	Size	Total Length	Type	'A'	'B'	'C'	'D'	'E'	'F'	'G'	'H'	'J'	'K'	'O'	'R'
S403	133	#5	7'-5"	17		2'-5"	2'-7"	2'-5"								
S535	19	#5	6'-5"			6'-5"										
S405	22	#5	7'-5"	17		2'-5"	2'-7"	2'-5"								
S539	16	#5	6'-8"			6'-8"										
S536	6	#5	5'-8"			5'-8"										
S537	6	#5	5'-0"			5'-0"										
S538	6	#5	7'-8"			7'-8"										
S540	10	#5	4'-0"			4'-0"										
S407	15	#5	6'-5"	17		2'-5"	1'-7"	2'-5"								
S555	2	#5	4'-0"			4'-0"										
S413	16	#5	12'-11"	16	2'-5"	4'-7"	1'-2"	4'-9"				3'-4 K"		3'-4 K"	4'-6 K"	
S420	39	#5	5'-4"	H91		2'-8"	2'-8"					2'-7"		10 K"		
S421	27	#5	13'-5"	22			2'-5"	8'-7"	2'-5"			1'-11 K"		2'-K"	11'-3"	
S542	2	#5	5'-0"			5'-0"										
S522	6	#5	8'-3"			8'-3"										
S541	2	#5	3'-5"			3'-5"										
S422	2	#5	5'-3"	3		3'-2"	2'-1"					1'-K"		1'-9 K"	4'-11 K"	
S418	6	#5	11'-7"	3		6'-10"	4'-9"					3'-4 K"		3'-3 K"	10'-1 K"	
S543	30	#5	19'-7"			19'-7"										
S584	124	#5	5'-2"			5'-2"										
S553	26	#5	17'-3"			17'-3"										
S546	22	#5	11'-9"			11'-9"										
S547	38	#5	10'-10"			10'-10"										
S550	12	#5	7'-6"			7'-6"										
S549	2	#5	4'-4"			4'-4"										
S548	2	#5	6'-3"			6'-3"										
S423	2	#5	7'-11"	3		7'-4"	7"					3 K"		6 K"	7'-10 K"	
A24a	1	#5	4'-3"			4'-3"										
Varies To																
A24l	1	#5	6'-8"			6'-8"										
S551	5	#5	6'-11"			6'-11"										
8425	23	#8	13'-4"	17		4'-7"	8'-9"									
S552	11	#5	15'-7"			15'-7"										
7515	16	#7	15'-7"			15'-7"										
7516	24	#7	17'-3"			17'-3"										
S427	40	#5	4'-8"	3		2'-4"	2'-4"					1'-8 K"		1'-7 K"	3'-11 K"	
S554	2	#5	3'-11"			3'-11"										
S428	22	#5	21'-0"	22			2'-3"	16'-6 K"	2'-3"			11"		11"	20'-7 K"	
S523	32	#5	30'-0"			30'-0"										
S584	16	#5	9'-6"			9'-6"										
7509	148	#7	8'-6"			8'-6"										
7419	85	#7	14'-4"	17		4'-7"	9'-9"									
S524	48	#5	32'-9"			32'-9"										
S525	26	#5	33'-0"			33'-0"										
S526	2	#5	11'-2"			11'-2"										
S527	26	#5	32'-1"			32'-1"										
S528	1	#5	15'-0"			15'-0"										
S529	1	#5	14'-1"			14'-1"										
S530	12	#5	18'-2"			18'-2"										
7510	12	#7	18'-2"			18'-2"										
7511	12	#7	17'-8"			17'-8"										
S531	12	#5	17'-8"			17'-8"										
S532	12	#5	18'-8"			18'-8"										
7512	12	#7	18'-8"			18'-8"										
S544	12	#5	19'-1"			19'-1"										
7513	12	#7	19'-1"			19'-1"										
S545	12	#5	19'-10"			19'-10"										
7514	12	#7	19'-10"			19'-10"										
S533	27	#5	11'-0"			11'-0"										
S534	27	#5	7'-4"			7'-4"										
8501	13	#8	40'-0"			40'-0"										
A26c	1	#5	4'-3"			4'-3"										
Varies To																
A26m	1	#5	6'-8"			6'-8"										

ABUTMENT 2 AND WING WALLS 3&4

Drawing Sheet : R03N — BAR LIST

Bar Mark	Qty	Size	Total Length	Type	'A'	'B'	'C'	'D'	'E'	'F'	'G'	'H'	'J'	'K'	'O'	'R'
S582	60	#5	8'-8"			8'-8"										
S582	146	#5	7'-6"			7'-6"										
S556	14	#5	5'-6"			5'-6"										
S429	20	#5	7'-10 K"	20		2'-2"	3'-6 K"	2'-2"								
S430	5	#5	9'-3 K"	3		2'-2"	4'-11 K"	2'-2"				3'-6"		3'-6"	7'-10"	
S431	5	#5	9'-7 K"	3		3'-3 K"	4'-11 K"	1'-4 K"				3'-6"		3'-6"	8'-2"	
S584	49	#5	9'-6"			9'-6"										
S585	87	#5	4'-2"			4'-2"										
6A32	32	#6	8'-2"	17		3'-7"	4'-7"									
5A33	48	#5	7'-9"	17		3'-7"	4'-2"									
S586	20	#5	15'-6"			15'-6"										
S557	16	#5	21'-6"			21'-6"										
A35a	1	#6	10'-7"			10'-7"										
Varies To																
A35p	1	#6	10'-10"			10'-10"										
A36a	12	#5	6'-11"			6'-11"										
A37a	7	#5	6'-11"			6'-11"										
Varies To																
A38b	1	#5	10'-10"			10'-10"										
5A40	95	#5	5'-11"	17		2'-2"	1'-7"	2'-2"								
S583	44	#5	6'-6"			6'-6"										
S558	14	#5	4'-8"			4'-8"										
S559	14	#5	2'-5"			2'-5"										
S560	2	#5	7'-1"			7'-1"										
A41a	1	#5	6'-5"			6'-5"										
Varies To																
A41h	1	#5	9'-4"			9'-4"										
A42a	1	#5	6'-5"			6'-5"										
Varies To																
A42n	1	#5	9'-4"			9'-4"										
5A45	5	#5	11'-2"	3		3'-4"	5'-8"	2'-2"				4'-0"		4'-0"	9'-6"	
6S01	50	#6	9'-6"			9'-6"										
S585	25	#5	8'-0"			8'-0"										
S563	28	#5	10'-6"			10'-6"										
5A43	20	#5	8'-4 K"	20		2'-2"	4'-K"	2'-2"								
5A44	5	#5	10'-0"	3		2'-2"	5'-8"	2'-2"				4'-0"		4'-0"	8'-4"	
8A46	32	#8	10'-1"	17		3'-7"	6'-6"									
S561	20	#5	26'-6"			26'-6"										
A47a	1	#8	16'-10"			16'-10"										
Varies To																
A47p	1	#8	17'-4"			17'-4"										
A50a	3	#5	7'-8"			7'-8"										
Varies To																
A50d	3	#5	8'-2"			8'-2"										
A51a	3	#5	12'-5"			12'-5"										
Varies To																
A51c	2	#5	12'-9"			12'-9"										
A52a	3	#5	16'-11"			16'-11"										
Varies To																
A52c	2	#5	17'-3"			17'-3"										
5A53	9	#5	8'-4"	3		3'-4"	2'-10"	2'-2"				2'-0"		2'-0"	7'-6"	
5A54	18	#5	7'-2"	3		2'-2"	2'-10"	2'-2"				2'-0"		2'-0"	6'-4"	
5A55	9	#5	5'-10 K"	20		2'-8"	1'-K"	2'-2"								
5A56	18	#5	6'-4 K"	20		2'-2"	2'-K"	2'-2"								
S564	8	#5	5'-2"			5'-2"										
7A57	70	#7	10'-1"	17		3'-7"	6'-6"									
S567	4	#5	23'-6"			23'-6"										
S568	4	#5	34'-6"			34'-6"										
A58a	2	#5	5'-9"			5'-9"										
Varies To																
A58g	2	#5	33'-4"			33'-4"										
S569	2	#5	35'-4"			35'-4"										
A59a	1	#7	16'-10"			16'-10"										
Varies To																
A59p	1	#7	18'-6"			18'-6"										
A60a	2	#5	14'-1"			14'-1"										
Varies To																
A60h	2	#5	15'-8"			15'-8"										
A61a	2	#5	10'-5"			10'-5"										
Varies To																
A61h	2	#5	11'-11"			11'-11"										
A62a	2	#5	6'-0"			6'-0"										
Varies To																
A62k	2	#5	8'-2"			8'-2"										
A63a	1	#5	6'-0"			6'-0"										
Varies To																
A63l	1	#5	8'-4"			8'-4"										
A64a	1	#5	10'-6"			10'-6"										
Varies To																
A64h	1	#5	12'-0"			12'-0"										
A65a	1	#5	14'-2"			14'-2"										
Varies To																
A65h	1	#5	15'-9"			15'-9"										
A66a	1	#5	17'-0"			17'-0"										
Varies To																
A66h	1	#5	18'-6"			18'-6"										
5A96	90	#5	6'-6"	25		1'-6"	1'-4"	10"	1'-4"	1'-6"		1'-3 K"		7 K"		
5A01	9	#5	8'-5 K"	25		1'-6"	2'-3 K"	10"	2'-3 K"	1'-6"		2'-3"		1'-1 K"		
A34a	1	#6	14'-4"			14'-4"										
Varies To																
A34p	1	#6	14'-7"			14'-7"										
Varies To																
A39b	1	#5	14'-7"			14'-7"										
A48a	6	#8	12'-4"			12'-4"										
Varies To																
A48c	4	#8	12'-9"			12'-9"										
A49a	6	#5	7'-8"			7'-8"										
Varies To																
A49d	4	#5	8'-3"			8'-3"										

RETAINING WALLS 5,6,7,8

Drawing Sheet : R04N — BAR LIST

Bar Mark	Qty	Size	Total Length	Type	'A'	'B'	'C'	'D'	'E'	'F'	'G'	'H'	'J'	'K'	'O'	'R'
8S02	8	#8	16'-5"			16'-5"										
8S03	32	#8	30'-0"			30'-0"										
7S17	8	#7	12'-5"			12'-5"										
7S18	32	#7	30'-0"			30'-0"										
5A70	418	#5	7'-9"	H2		10 K"	2'-9"	1'-2 K"	2'-11"				2 K"		5 K"	4 K"
5A71	378	#5	4'-10"	H1		1'-3"	8 K"	1'-1"	6 K"	1'-3"			5"		2'-4 K"	3"
5A72	76	#5	9'-7"	H3		1'-6"	3'-2 K"	5"	2'-11 K"	1'-6"						
7S19	8	#7	12'-9"			12'-9"										
7S20	32	#7	14'-4"			14'-4"										
A73a	4	#5	5'-8"	17		2'-7"	6"	2'-7"								
Varies To																
A73l	4	#5	7'-6"	17		3'-6"	6"	3'-6"								
S576	376	#5	30'-0"			30'-0"										
S574	94	#5	24'-5"			24'-5"										
6S08	507	#6	24'-7"			24'-7"										
A82a	1	#6	2'-2"			2'-2"										
Varies To																
A82r	1	#6	25'-5"			25'-5"										
6S09	56	#6	30'-0"			30'-0"										
6S10	14	#6	26'-1"			26'-1"										
A83a	1	#8	4'-6"			4'-6"										
Varies To																
A83n	1	#6	22'-4"			22'-4"										
5A84	124	#5	5'-4"	1	7"	4'-9"							5"			
4A85	460	#4	4'-10"	1	6"	4'-4"							4"			
5A86	481	#5	5'-4 K"	1	7"	2'-9 K"							5"			
A88a	1	#5	2'-7"			2'-7"										
Varies To																
A88s	1	#5	27'-4"			27'-4"										
A89a	1	#5	18'-2"			18'-2"										
Varies To																
A89f	1	#5	25'-0"			25'-0"										
A90a	1	#5	17'-10"			17'-10"										
Varies To																
A90f	1	#5	24'-9"			24'-9"										
5S78	7	#5	18'-6"			18'-6"										
5S79	6	#5	10'-0"			10'-0"										
A91a	1	#5	2'-2"			2'-2"										
Varies To																
A91s	1	#5	26'-10"			26'-10"										
A92a	1	#5	18'-2"			18'-2"										
Varies To																
A92f	1	#5	25'-0"			25'-0"										
A93a	1	#5	17'-11"			17'-11"										
Varies To																
A93f	1	#5	24'-9"			24'-9"										
5S80	6	#5	19'-11"			19'-11"										
5S81	6	#5	11'-5"			11'-5"										
A94a	5	#5	6'-4"			6'-4"										
Varies To																
A94h	5	#5	8'-11"			8'-11"										
A95a	5	#5	6'-3"			6'-3"										
Varies To																
A95h	5	#5	8'-10"			8'-10"										
A80a	1	#6	2'-7"			2'-7"										
Varies To																
A80r	1	#6	25'-11"			25'-11"										
A81a	1	#6	5'-4"			5'-4"										
Varies To																
A81m	1	#6	21'-10"			21'-10"										

DECK REINFORCEMENT

Drawing Sheet : R05N — BAR LIST

Bar Mark	Qty	Size	Total Length	Type	'A'	'B'	'C'	'D'	'E'	'F'	'G'	'H'	'J'	'K'	'O'	'R'
6A74	200	#6	7'-3"	16	1'-0"	2'-1"	1'-2"	3'-0"				2'-1 K"		2'-1 K"	3'-3 K"	
5A75	200	#5	16'-9"	H66		2'-5"	5'-2"	1'-10"	4'-11"	2'-5"				3 K"		
5A76	101	#5	5'-6"	3		3'-1"	2'-5"					1'-8 K"		1'-8 K"	4'-9 K"	
4A77	52	#4	7'-0"	H3		2'-2"	1'-6 K"	3 K"	10"	2'-2"						1 K"
9A78	2	#9	13'-3"	1	1'-3"	11'-11"							11 K"			
6S06	2	#6	11'-11"			11'-11"										
4S01	6	#4	11'-11"			11'-11"										
9A79	2	#9	13'-0"	1	1'-3"	11'-9"							11 K"			
6S07	2	#6	11'-9"			11'-9"										
4S02	6	#4	11'-9"			11'-9"										
S576	46	#5	30'-0"			30'-0"										
S575	23	#5	21'-3"			21'-3"										
S577	23	#5	22'-2"			22'-2"										
6S11	99	#6	2'-10"			2'-10"										
9A69	46	#9	20'-8 K"	1	1'-3"	19'-5 K"							11 K"			
6S05	46	#6	19'-6"			19'-6"										
9A68	46	#9	20'-7"	1	1'-3"	19'-4"							11 K"			
6S03	46	#6	19'-4"			19'-4"										
6S02	40	#6	23'-0"			23'-0"										
5S72	40	#5	23'-0"			23'-0"										
5S73	42	#5	22'-7"			22'-7"										
6S04	42	#6	22'-6"			22'-6"										
5S70	4	#5	19'-6"			19'-6"										
5S71	4	#5	19'-4"			19'-4"										
6A67	80	#6	7'-2 K"	S11		7'-2 K"						3'-6"			7"	

APPROACH SLABS AND SUSPENDED BACKWALLS

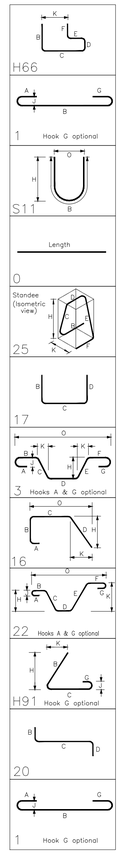

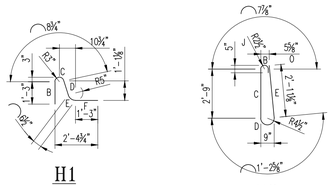

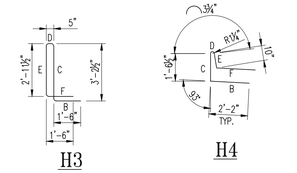

SPECIAL BEND DETAILS

No.	Description	Date	By
1	APPROVAL PRINT	02/18/15	CPS

Revisions and Issue Record

The full intent and purpose of this drawing is the placing of reinforcing steel bars ONLY. It is NOT to be used as a means of communication between the Architect, Engineer, Contractor or any other Sub-trades.

THIS DRAWING IS NOT TO BE SCALED.

HarrisRebar Barker Steel — National Strength. Local Service.

DETAILED AT: CANAAN NEW HAMPSHIRE

Project: HARTFORD LATERAL BRIDGE I-91 NORTHBOUND

Drawing: BAR SCHEDULES

Customer: PCL CIVIL CONSTRUCTORS

Engineer: G. LAROCHE

Refer to Release:

Date	Drawn	Chkd.	JOB No.	Dwg. No.
02/10/15	CPS		33505535	R06N

W:\csample\Projects\33505535\Placing Drawings\DWGs\R01N.dwg