CONSTRUCTION LEADERS

LETTER OF TRANSMITTAL			
DATE:	**March 9, 2015**	PCL JOB NO:	**5515002**
ATTN:	**Chris Barker**	TRANSMITTAL NO:	**033**

To: **State of Vermont Agency of Transportation**
One National Life Drive
Montpelier, VT 05633-5001
(802) 828-0053

Re: Hartford Lateral Slide
Project No.: IM 091-2(79)
Contract ID.: 12A132 County: Windsor PCL FILE NO: 5515002-8.1

WE ARE SENDING **X** Attached ____ Under separate cover via **Email & SP** the following:
X Shop drawings ____ Prints ____ Plans ____ Samples ____ Specifications
____ Copy of Letter ____ Change Order ____ Other

COPIES	SPEC.	REVISION	DESCRIPTION
1	**507.03.b**	**1**	**Bridge 43S Reinforcing Steel Fabrication Drawings**

TRANSMITTED for as checked below:

X For approval ____ Approved as submitted ____ Resubmit **1** Copies for approval
____ For your use ____ Approved as noted ____ Submit ____ Copies for distribution
____ As requested ____ Returned for corrections ____ Return ____ Corrected prints
____ For review and comment

Remarks:

The attached drawings have been revised per the Agency's comments dated 3/4/15 and per discussions in our conference call 3/9/15.

Please return an email of this approved submittal to Erich Heymann (ewheymann@pcl.com) and Jeremy Mackling (jmackling@pcl.com).

We request the review and return of this submittal within 4 days. Please advise if this request cannot be met so we can plan accordingly.

By: **Erich Heymann,** Project Engineer

COPY TO: Project Files

3810 Northdale Blvd., Suite 200; Tampa, FL • (813) 264-9500 • (813) 264-6689 (fax)

CONSTRUCTION LEADERS

SUBMITTAL NO. : 008.1
Bridge 43S Reinforcing Steel Fabrication Drawings

Item No.	Specification	Description
1	507.03.b	Bridge 43S Reinforcing Steel Fabrication Drawings

PROJECT:
HARTFORD LATERAL SLIDE
PROJECT NO.: IM 091-2(79)
CONTRACT ID.: 12A132

OWNER:
STATE OF VERMONT AGENCY OF TRANSPORTATION

ENGINEER OF RECORD:
STATE OF VERMONT AGENCY OF TRANSPORTATION

CONTRACTOR:
PCL CIVIL CONSTRUCTORS, INC.

MARCH 9, 2015

3810 Northdale Blvd., Suite 200; Tampa, FL • (813) 264-9500 • (813) 264-6689 (fax)

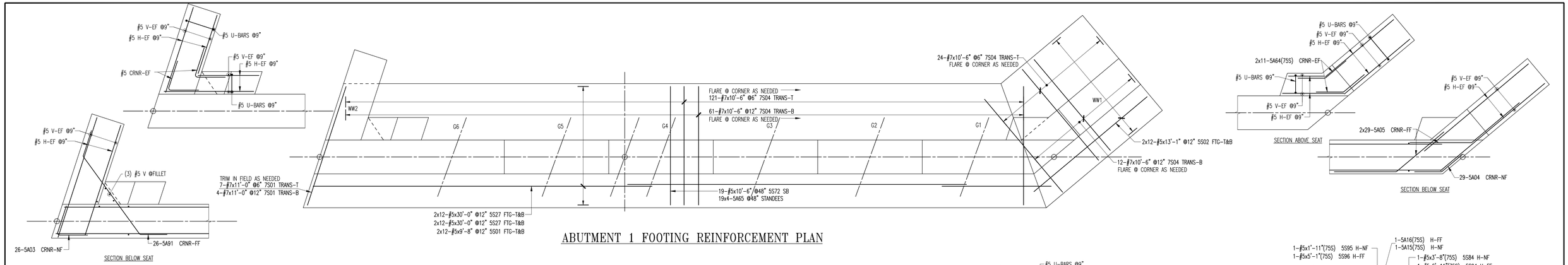

ABUTMENT 1 FOOTING REINFORCEMENT PLAN

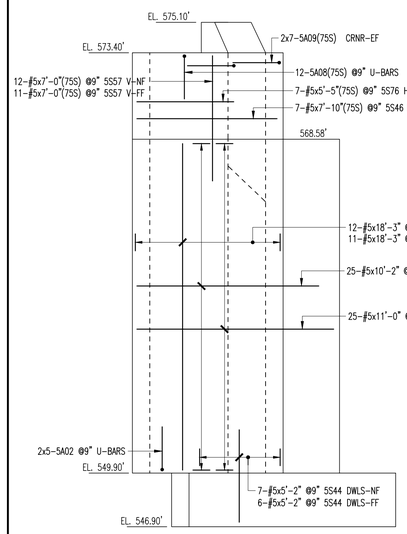

WINGWALL 2 (WW2) ELEVATION

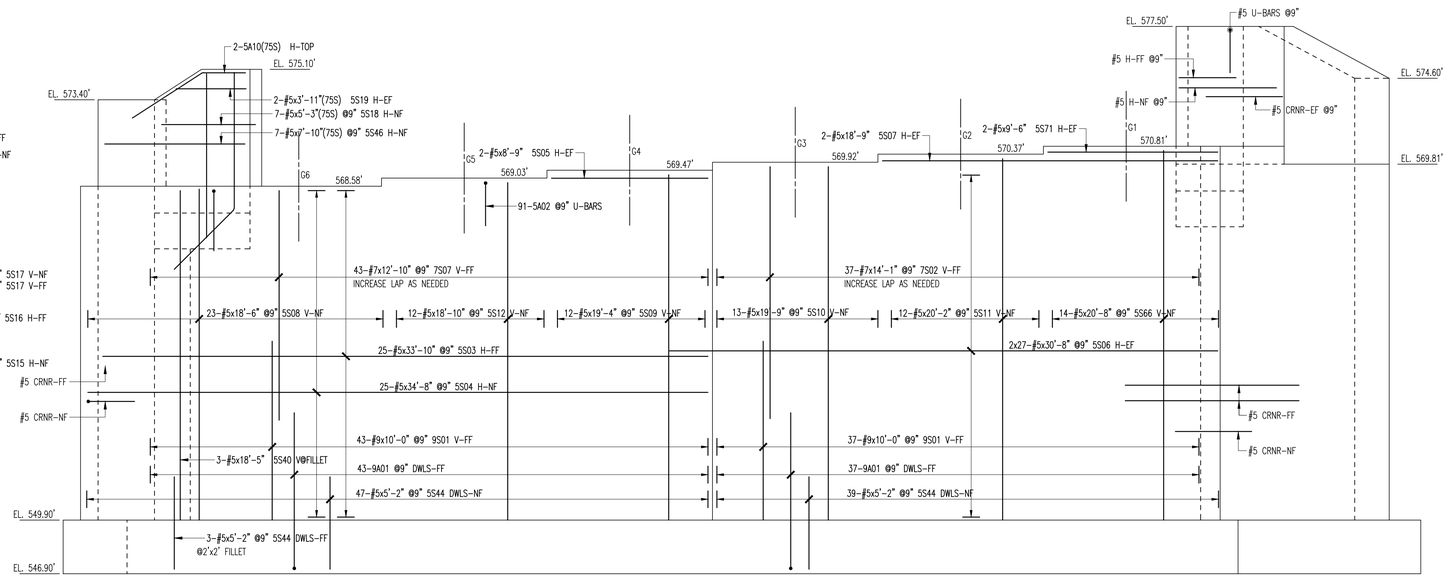

ABUTMENT 1 ELEVATION

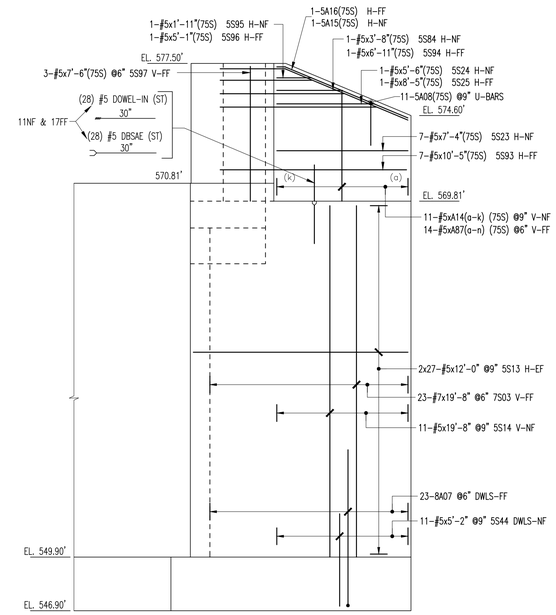

WINGWALL 1 (WW1) ELEVATION

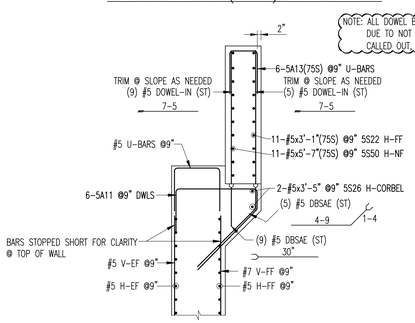

CHEEKWALL @ WW1 SECTION

NOTE: ALL DOWEL BAR SUBS NOT INCLUDED IN THE BAR SCHEDULES DUE TO NOT BEING A "LIVE BAR" IN REBARCAD--THUS, THEY ARE CALLED OUT, QUANTITY, SIZES AND LENGTHS ON APPROPRIATE ELEVATIONS

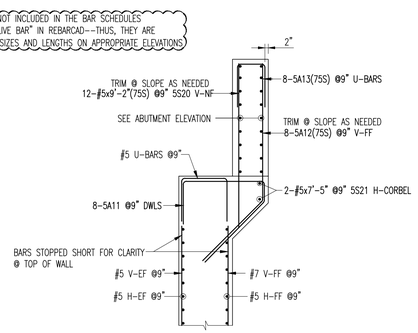

CHEEKWALL @ WW2 SECTION

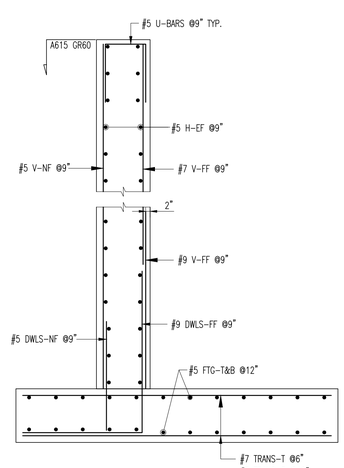

ABUTMENT WALL REINF. SECTION

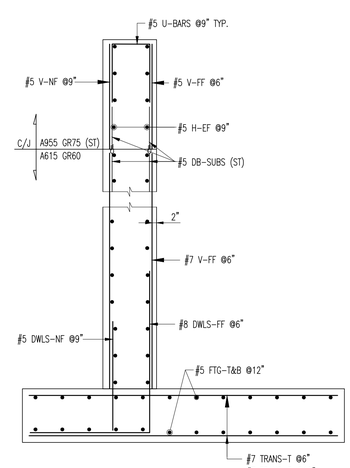

WINGWALL 1 REINF. SECTION

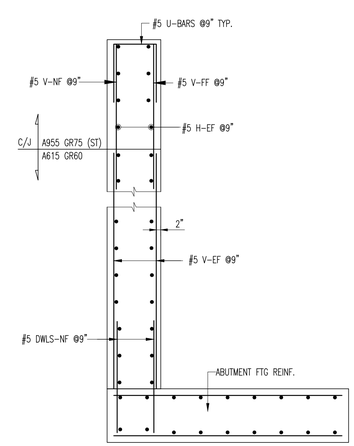

WINGWALL 2 REINF. SECTION

ALL MATERIAL ON THIS DRAWING SHALL BE AASHTO M31 U.N.O.

ALL MATERIAL ON THIS DRAWING NOTED AS (75S) SHALL BE ASTM "ASTM A955" STAINLESS STEEL

LAP CHART-U.N.O.

SIZE	TOP BARS ★	OTHER BARS
#11		
#10		
#9		
#8	54"	54"
#7	41"	41"
#6	31"	31"
#5	26"	26"
#4		
#3		

★ -Top bars are horiz. bars with more than 12" of concrete cast below the bars.

SEE SHEET R06S FOR BAR LISTS
3" CLR COVER U.N.O.

No.	Description	Date	By
2	FINAL APPROVAL PRINT	03/09/15	CPS
1	APPROVAL PRINT	02/13/15	CPS

Revisions and Issue Record

The full intent and purpose of this drawing is the placing of reinforcing steel bars ONLY. It is NOT to be used as a means of communication between the Architect, Engineer, Contractor or any other Sub-trades.

THIS DRAWING IS NOT TO BE SCALED.

HarrisRebar Harter Steel — National Strength. Local Service.

DETAILED AT:
CANAAN
NEW HAMPSHIRE

Project: BRIDGE 43 S REPLACEMENT
I-91 HARTFORD VT

Drawing: I-91 SOUTHBOUND
ABUTMENT 1 W/ WINGWALLS 1&2

Customer: PCL CIVIL CONSTRUCTORS

Engineer: G. LAROCHE

Refer to Release:

Date	Drawn	Chkd.	JOB No.	Dwg. No.
02/06/15	CPS		33505535	R01S

W:\csample\Projects\33505535\Placing Drawings\DWGs\R01S.dwg

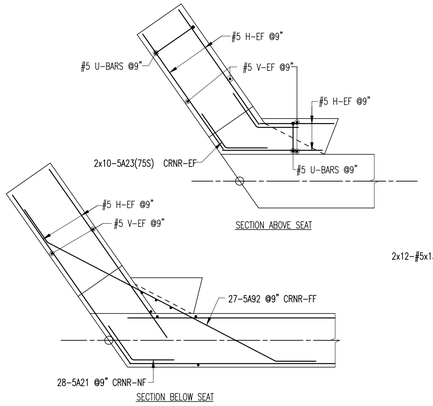

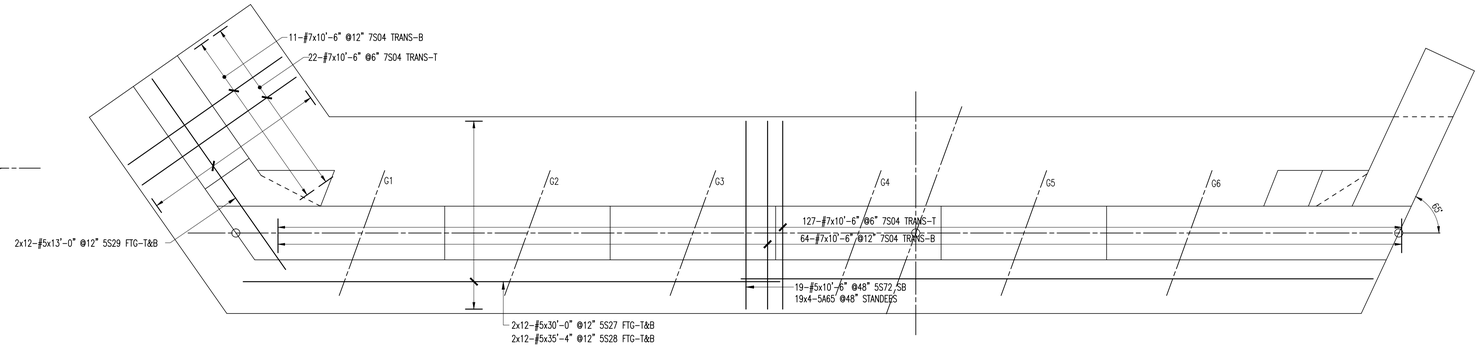

ABUTMENT 2 FOOTING REINFORCEMENT PLAN

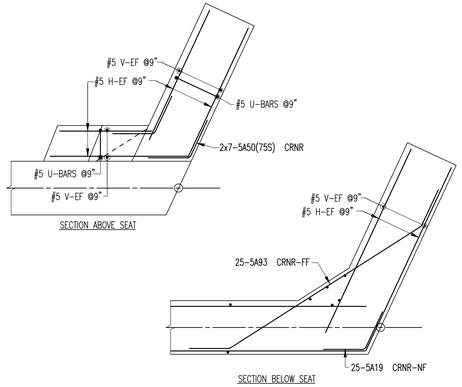

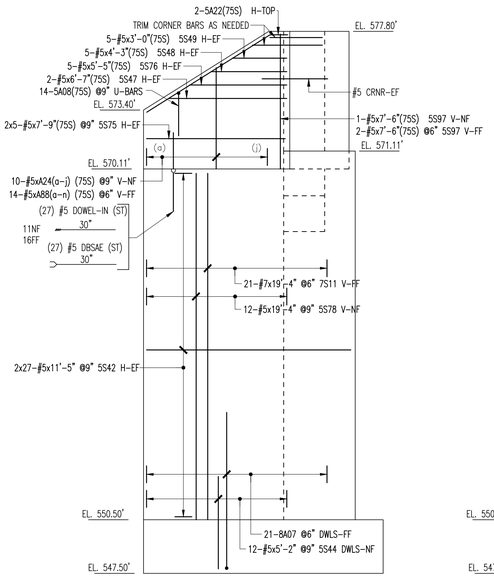

WINGWALL 3 (WW3) ELEVATION

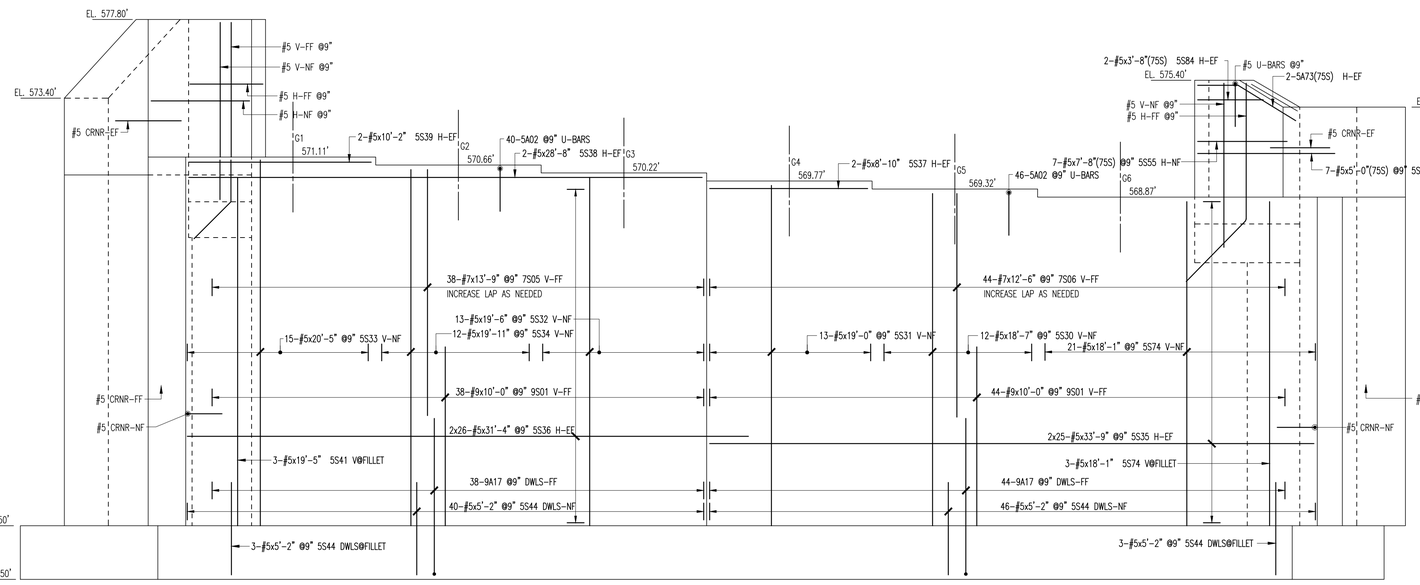

ABUTMENT 2 ELEVATION

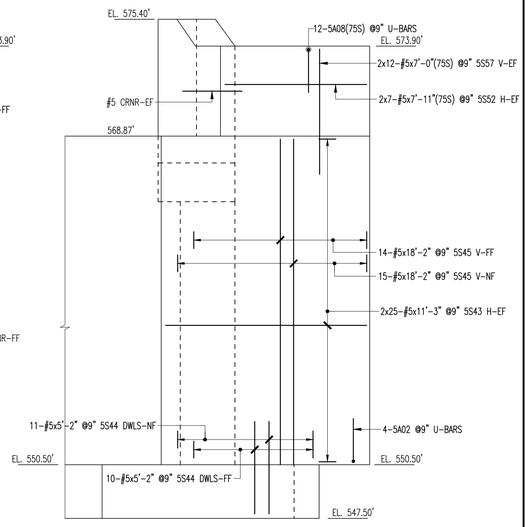

WINGWALL 4 (WW4) ELEVATION

NOTE: ALL DOWEL BAR SUBS NOT INCLUDED IN THE BAR SCHEDULES DUE TO NOT BEING A "LIVE BAR" IN REBARCAD--THUS, THEY ARE CALLED OUT, QUANTITY, SIZES AND LENGTHS ON APPROPRIATE ELEVATIONS

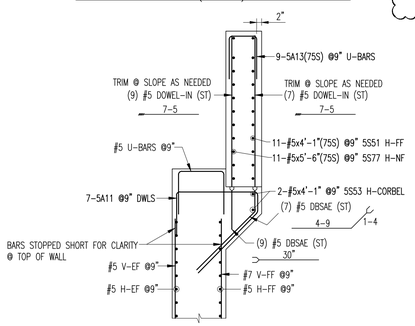

CHEEKWALL @ WW3 SECTION

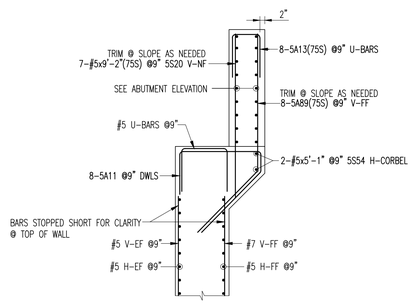

CHEEKWALL @ WW4 SECTION

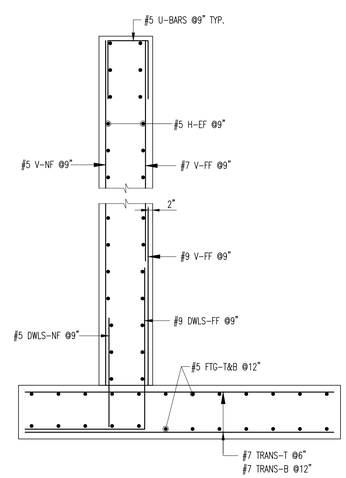

ABUTMENT WALL REINFORCEMENT SECTION

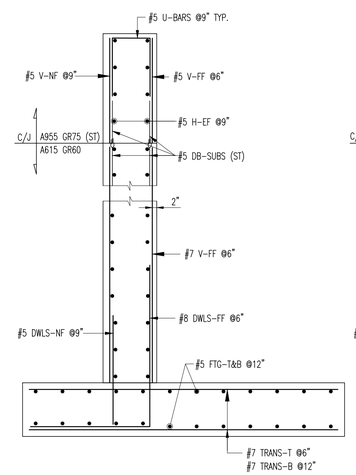

WINGWALL 3 REINF. SECTION

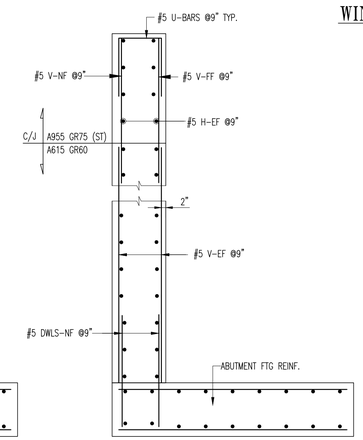

WINGWALL 4 REINF. SECTION

ALL MATERIAL ON THIS DRAWING SHALL BE AASHTO M31 U.N.O.

ALL MATERIAL ON THIS DRAWING NOTED AS (75S) SHALL BE ASTM "ASTM A955" STAINLESS STEEL

LAP CHART-U.N.O.		
#11		
#10		
#9		
#8	54"	54"
#7	41"	41"
#6	31"	31"
#5	26"	26"
#4		
#3		
SIZE	TOP BARS ★	OTHER BARS

★ -Top bars are horiz. bars with more than 12" of concrete cast below the bars.

SEE SHEET R06S FOR BAR LISTS
3" CLR COVER U.N.O.

No.	Description	Date	By
2	FINAL APPROVAL PRINT	03/09/15	CPS
1	APPROVAL PRINT	02/13/15	CPS

Revisions and Issue Record

The full intent and purpose of this drawing is the placing of reinforcing steel bars ONLY. It is NOT to be used as a means of communication between the Architect, Engineer, Contractor or any other Sub-trades.

THIS DRAWING IS NOT TO BE SCALED.

HarrisRebar Barker Steel — National Strength. Local Service.

DETAILED AT:
CANAAN
NEW HAMPSHIRE

Project: BRIDGE 43 S REPLACEMENT
I-91 HARTFORD VT

Drawing: I-91 SOUTHBOUND
ABUTMENT 2 W/ WINGWALLS 3&4

Customer: PCL CIVIL CONSTRUCTORS

Engineer: G LAROCHE

Refer to Release:

Date	Drawn	Chkd.	JOB No.	Dwg. No.
02/06/15	CPS		33505535	R02S

W:\csample\Projects\33505535\Placing Drawings\DWGs\R01S.dwg

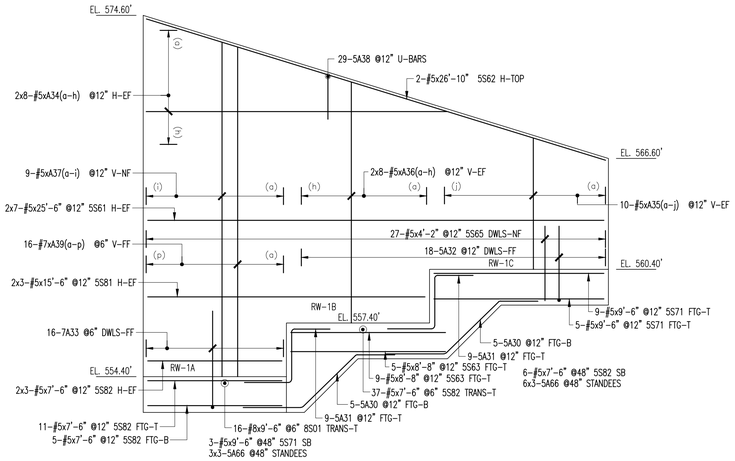

RETAINING WALL 1 (RW1) ELEVATION

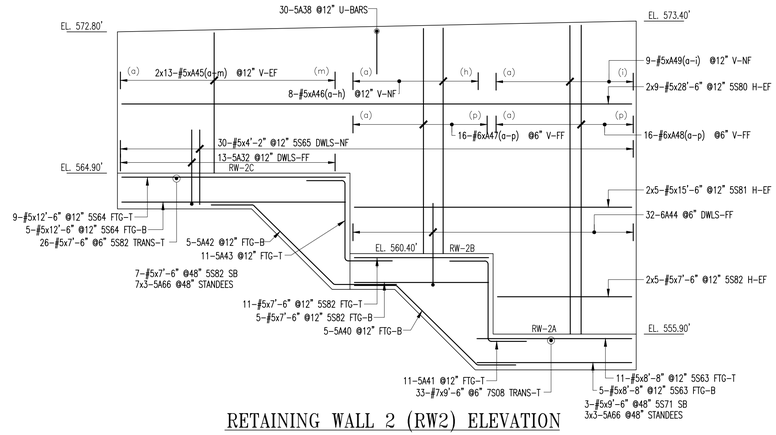

RETAINING WALL 2 (RW2) ELEVATION

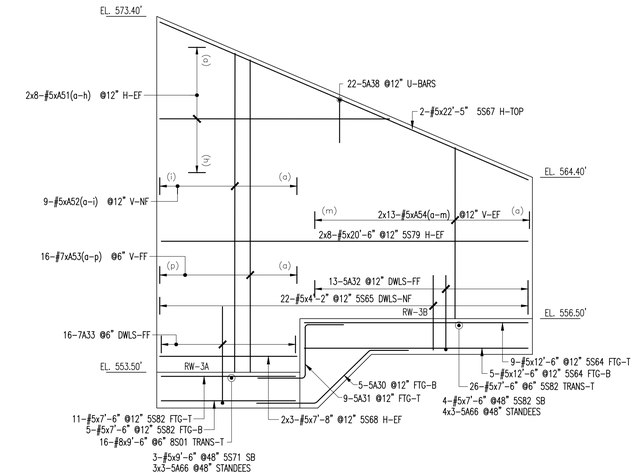

RETAINING WALL 3 (RW3) ELEVATION

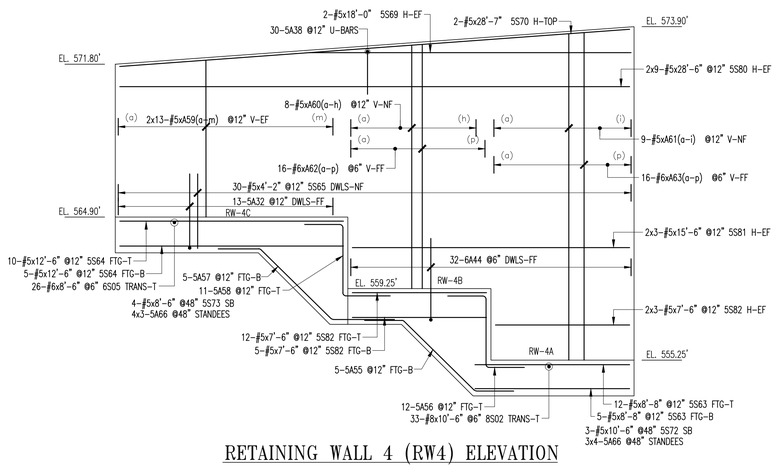

RETAINING WALL 4 (RW4) ELEVATION

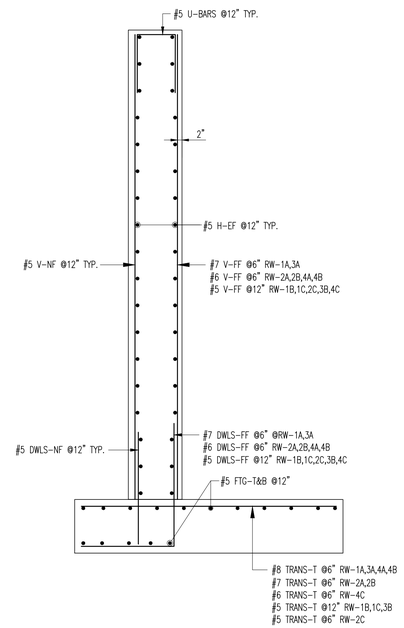

TYYPICAL RETAINING WALL REINFORCEMENT SECTION

LAP CHART-U.N.O.

#11		
#10		
#9		
#8	54"	54"
#7	41"	41"
#6	31"	31"
#5	26"	26"
#4		
#3		
SIZE	TOP BARS ★	OTHER BARS

★ -Top bars are horiz. bars with more than 12" of concrete cast below the bars.

SEE SHEET R06S FOR BAR LISTS
3" CLR COVER U.N.O.

ALL MATERIAL ON THIS DRAWING SHALL BE AASHTO M31 U.N.O.

No.	Description	Date	By
2	FINAL APPROVAL PRINT	03/09/15	CPS
1	APPROVAL PRINT	02/13/15	CPS

Revisions and Issue Record

The full intent and purpose of this drawing is the placing of reinforcing steel bars ONLY. It is NOT to be used as a means of communication between the Architect, Engineer, Contractor or any other Sub-trades.

THIS DRAWING IS NOT TO BE SCALED.

HarrisRebar Barker Steel
National Strength. Local Service.

DETAILED AT:
CANAAN
NEW HAMPSHIRE

Project: BRIDGE 43 S REPLACEMENT
I-91 HARTFORD VT

Drawing: I-91 SOUTHBOUND
RETAINING WALLS 1-4

Customer: PCL CIVIL CONSTRUCTORS

Engineer: G LAROCHE

Refer to Release:

Date	Drawn	Chkd.	JOB No.	Dwg. No.
02/09/15	CPS		33505535	R03S

W:\sample\Projects\33505535\Placing Drawings\DWGS\R01S.dwg

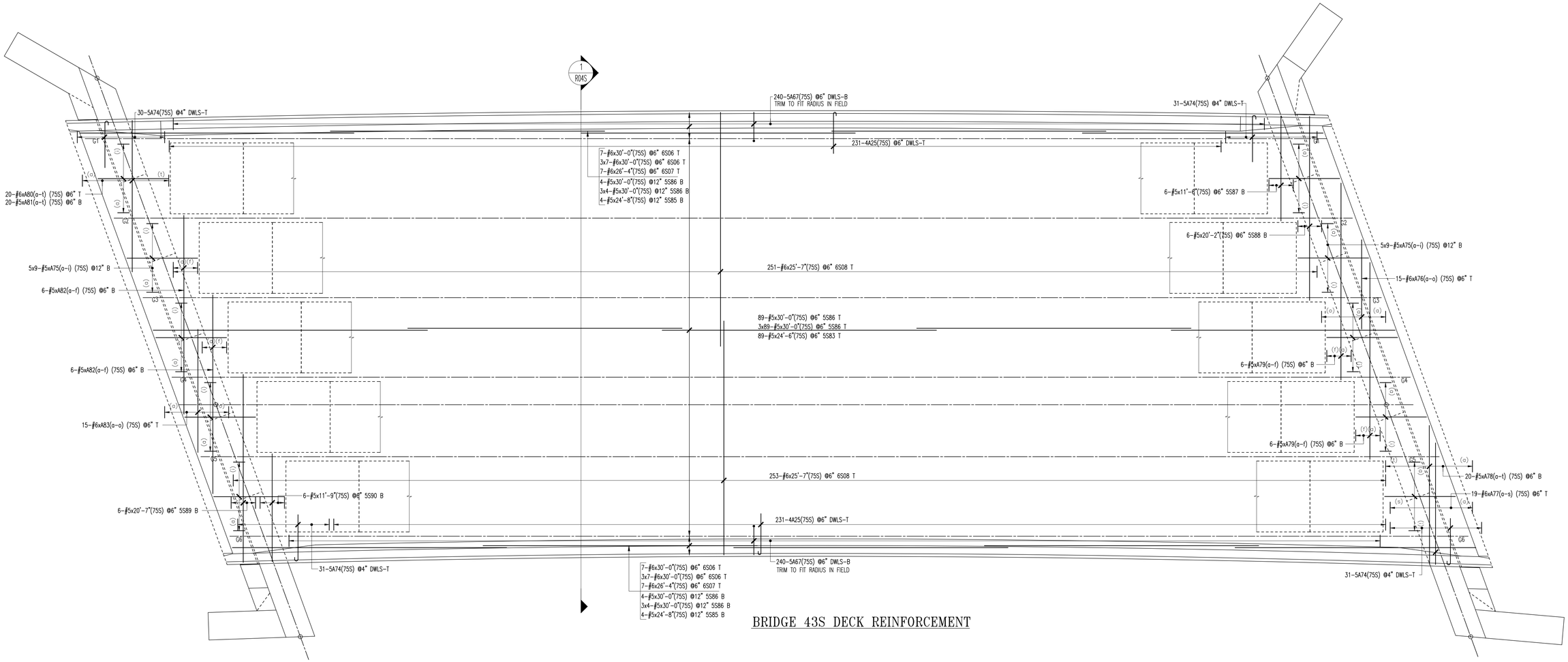

BRIDGE 43S DECK REINFORCEMENT

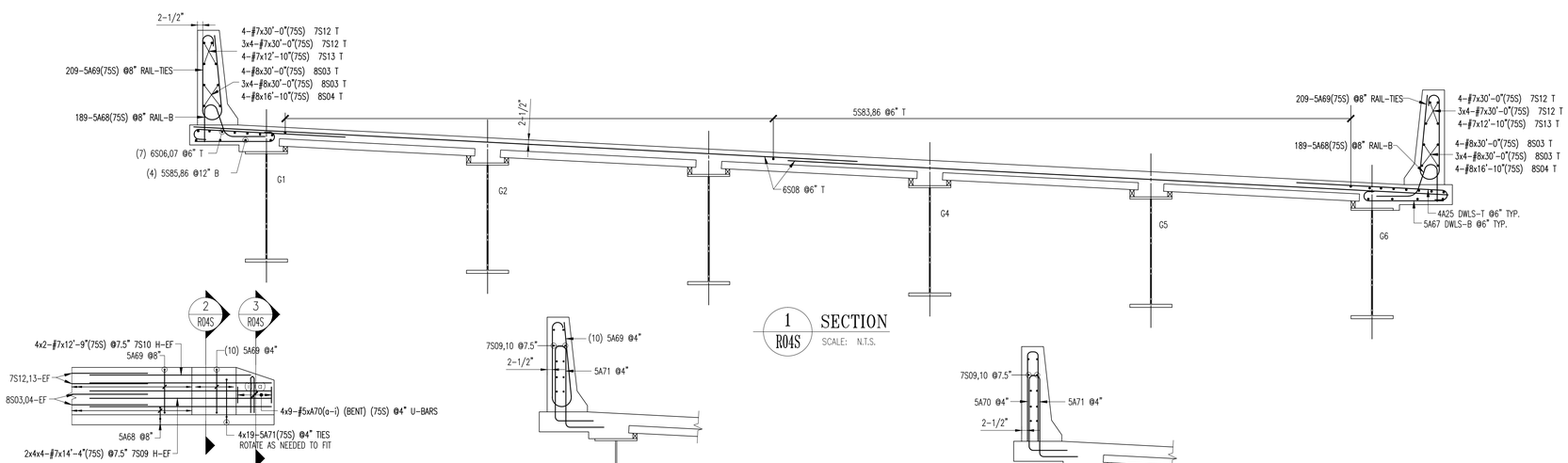

1 R04S SECTION
SCALE: N.T.S.

RAIL END TRANSITIONS ELEVATION

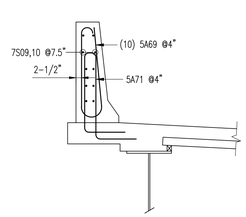

2 R04S SECTION
SCALE: N.T.S.

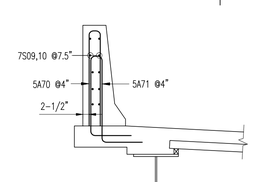

3 R04S SECTION
SCALE: N.T.S.

LAP CHART-U.N.O.

SIZE	TOP BARS ★	OTHER BARS
#11		
#10		
#9		
#8	54"	54"
#7	41"	41"
#6	31"	31"
#5	26"	26"
#4		
#3		

★ -Top bars are horiz. bars with more than 12" of concrete cast below the bars.

SEE SHEET R06S FOR BAR LISTS
3" CLR COVER U.N.O.

ALL MATERIAL ON THIS DRAWING NOTED AS (75S) SHALL BE ASTM "ASTM A955" STAINLESS STEEL

No.	Description	Date	By
2	FINAL APPROVAL PRINT	03/09/15	CPS
1	APPROVAL PRINT	02/13/15	CPS

Revisions and Issue Record

The full intent and purpose of this drawing is the placing of reinforcing steel bars ONLY. It is NOT to be used as a means of communication between the Architect, Engineer, Contractor or any other Sub-trades.

THIS DRAWING IS NOT TO BE SCALED.

HarrisRebar Barker Steel
National Strength. Local Service.

DETAILED AT:
CANAAN
NEW HAMPSHIRE

Project: BRIDGE 43 S REPLACEMENT
I-91 HARTFORD VT

Drawing: I-91 SOUTHBOUND
DECK REINFORCEMENT

Customer: PCL CIVIL CONSTRUCTORS

Engineer: G LAROCHE

Refer to Release:

Date	Drawn	Chkd.	JOB No.	Dwg. No.
02/09/15	CPS		33505535	R04S

W:\csample\Projects\33505535\Placing Drawings\DWGs\R01S.dwg

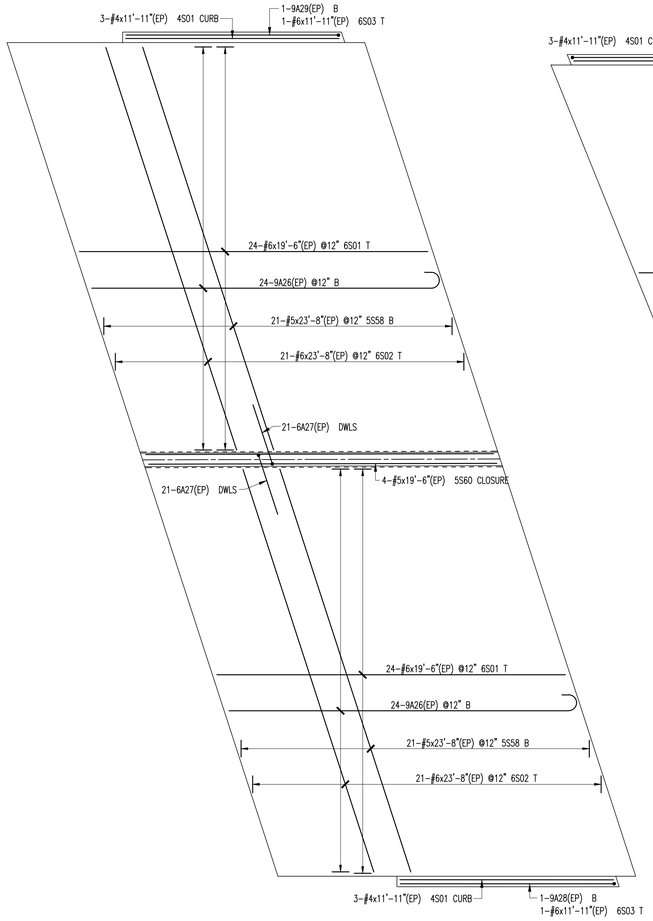

ABUTMENT 1 APPROACH SLAB

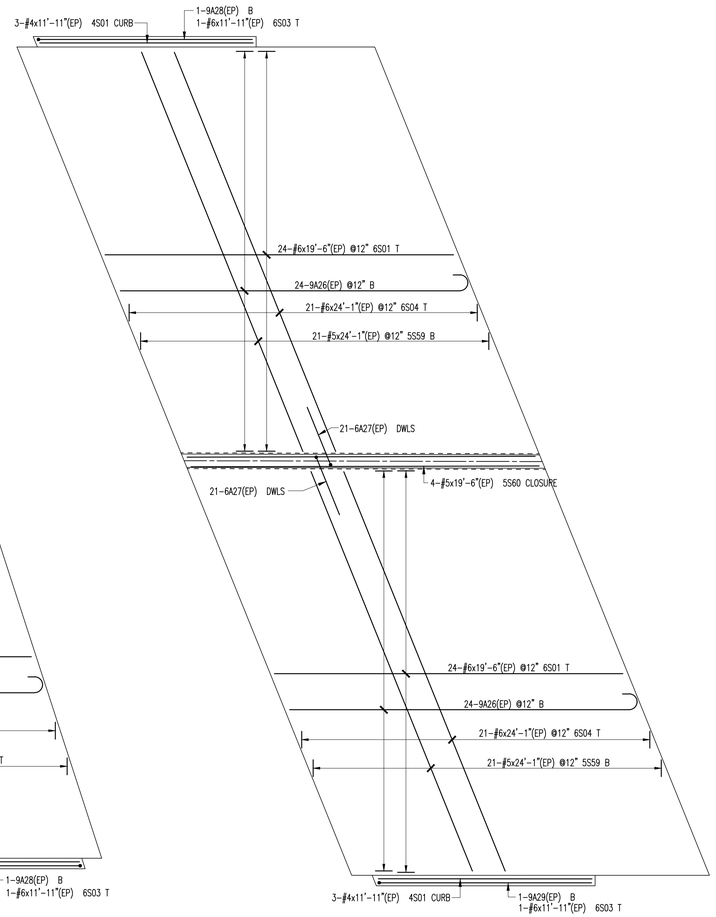

ABUTMENT 2 APPROACH SLAB

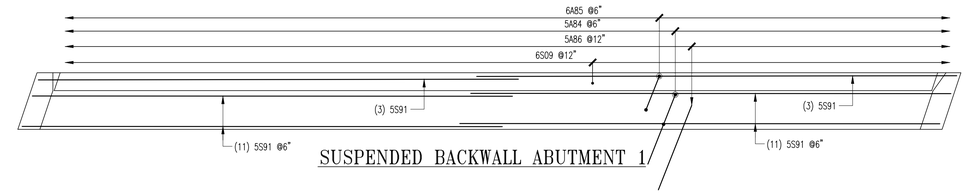

SUSPENDED BACKWALL ABUTMENT 1

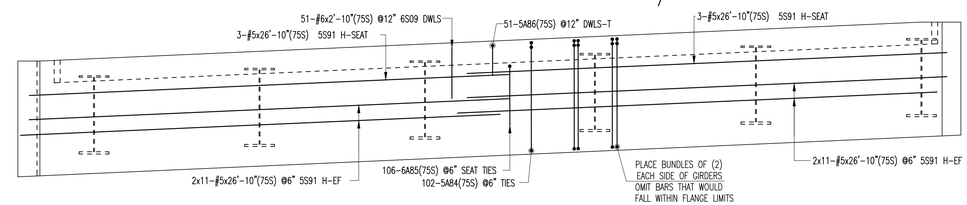

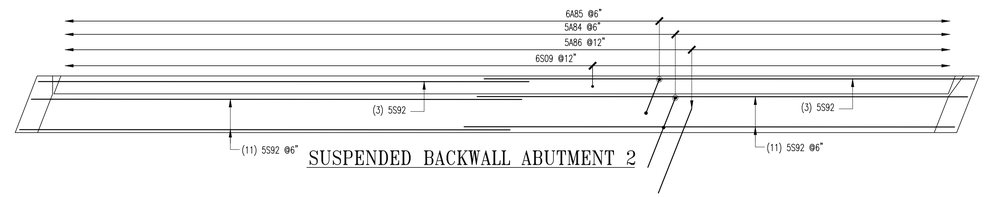

SUSPENDED BACKWALL ABUTMENT 2

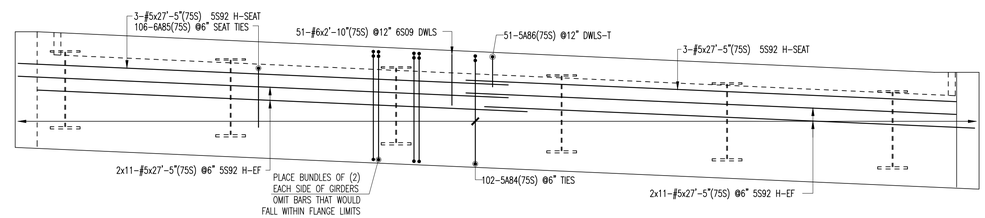

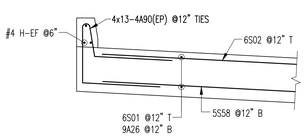

TYPICAL APPROACH SLAB @ CURB

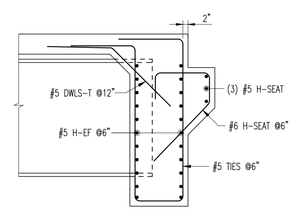

TYPICAL SUSPENDED BACKWALL SECTION

ALL MATERIAL NOTED AS (75S)
SHALL BE "ASTM A955"
STAINLESS STEEL

ALL MATERIAL NOTED AS "EP"
SHALL BE ASTM A1055 GRADE 60
"DUAL COATED"

SEE SHEET R06S FOR BAR LISTS
3" CLR COVER U.N.O.

LAP CHART-U.N.O.

SIZE	TOP BARS ★	OTHER BARS
#11		
#10		
#9		
#8	54"	54"
#7	41"	41"
#6	31"	31"
#5	26"	26"
#4		
#3		

★ -Top bars are horiz. bars with more than 12" of concrete cast below the bars.

No.	Description	Date	By
2	FINAL APPROVAL PRINT	03/09/15	CPS
1	APPROVAL PRINT	02/13/15	CPS

Revisions and Issue Record

The full intent and purpose of this drawing is the placing of reinforcing steel bars ONLY. It is NOT to be used as a means of communication between the Architect, Engineer, Contractor or any other Sub-trades.

THIS DRAWING IS NOT TO BE SCALED.

HarrisRebar Barker Steel
National Strength. Local Service.

DETAILED AT:
CANAAN
NEW HAMPSHIRE

Project: BRIDGE 43 S REPLACEMENT
I-91 HARTFORD VT

Drawing: I-91 SOUTHBOUND APPROACH SLABS AND SUSPENDED BACKWALLS

Customer: PCL CIVIL CONSTRUCTORS

Engineer: G LAROCHE

Refer to Release:

Date	Drawn	Chkd.	JOB No.	Dwg. No.
02/09/15	CPS		33505535	R05S

W:\csample\Projects\33505535\Placing Drawings\DWGs\R01S.dwg

Drawing Sheet : R01S — BAR LIST

	Bar Mark	Qty	Size	Total Length	Type	'A'	'B'	'C'	'D'	'E'	'F'	'G'	'H'	'J'	'K'	'O'	'R'
7SS	A14a	1	#5	4'-7"			4'-7"										
	Varies To																
7SS	A14k	1	#5	7'-5"			7'-5"										
7SS	5A08	23	#5	7'-5"	17		2'-5"	2'-7"	2'-5"								
7SS	5A09	14	#5	7'-5"	H91		2'-8 K"	2'-8"								2'-7 K"	9 K"
7SS	5A10	2	#5	7'-1"	3		2'-5"	4'-8"								2'-7"	3'-10 K"
7SS	5A12	8	#5	12'-5"	3		7'-8"	4'-9"								3'-4 K"	3'-3 K"
7SS	5A13	14	#5	6'-5"	17		2'-5"	1'-7"	2'-5"								
7SS	5A15	1	#5	11'-8"	3		7'-5 K"	3'-7 K"								1'-5 K"	3'-4"
7SS	5A16	1	#5	7'-11"	3		7'-5 K"	5 K"								2 K"	5"
7SS	5A64	22	#5	4'-10"	3		2'-5"	2'-5"								1'-7"	1'-9 K"
7SS	5S18	7	#5	5'-3"			5'-3"										
7SS	5S19	2	#5	3'-11"			3'-11"										
7SS	5S20	12	#5	9'-2"			9'-2"										
7SS	5S22	11	#5	3'-1"			3'-1"										
7SS	5S23	7	#5	7'-4"			7'-4"										
7SS	5S24	1	#5	5'-6"			5'-6"										
7SS	5S25	1	#5	8'-5"			8'-5"										
7SS	5S46	14	#5	7'-10"			7'-10"										
7SS	5S50	11	#5	5'-7"			5'-7"										
7SS	5S57	23	#5	7'-0"			7'-0"										
7SS	5S76	7	#5	5'-5"			5'-5"										
7SS	5S84	1	#5	3'-8"			3'-8"										
7SS	5S83	7	#5	10'-5"			10'-5"										
7SS	5S94	1	#5	6'-11"			6'-11"										
	5A02	101	#5	7'-5"	17		2'-5"	2'-7"	2'-5"								
	5A03	26	#5	5'-4"	H91		2'-8 K"	2'-8"								2'-7 K"	9 K"
	5A04	29	#5	4'-10"	3		2'-5"	2'-5"								1'-7"	1'-9 K"
	5A05	58	#5	11'-0"	3		5'-6"	5'-6 K"								3'-7"	4'-2 K"
	5A11	14	#5	12'-11"	16	2'-5"	4'-7"	1'-2"	4'-9"							3'-4 K"	3'-4 K"
	5A65	76	#5	8'-4 K"	25		1'-6"	2'-3 K"	10"	2'-3 K"	1'-6"					2'-2 K"	1'-1 K"
	5S01	34	#5	9'-8"			9'-8"										
	5S02	24	#5	13'-1"			13'-1"										
	5S03	25	#5	33'-10"			33'-10"										
	5S04	25	#5	34'-8"			34'-8"										
	5S05	2	#5	8'-9"			8'-9"										
	5S06	54	#5	30'-8"			30'-8"										
	5S07	2	#5	18'-9"			18'-9"										
	5S08	23	#5	18'-6"			18'-6"										
	5S09	12	#5	19'-4"			19'-4"										
	5S10	13	#5	19'-9"			19'-9"										
	5S11	12	#5	20'-2"			20'-2"										
	5S12	12	#5	18'-10"			18'-10"										
	5S13	54	#5	12'-0"			12'-0"										
	5S14	11	#5	19'-8"			19'-8"										
	5S15	25	#5	11'-0"			11'-0"										
	5S16	25	#5	10'-2"			10'-2"										
	5S17	23	#5	18'-3"			18'-3"										
	5S21	2	#5	7'-5"			7'-5"										
	5S26	2	#5	3'-5"			3'-5"										
	5S27	48	#5	30'-0"			30'-0"										
	5S40	3	#5	18'-5"			18'-5"										
	5S44	113	#5	5'-2"			5'-2"										
	5S66	14	#5	20'-8"			20'-8"										
	5S71	2	#5	9'-6"			9'-6"										
	5S72	19	#5	10'-6"			10'-6"										
	7S01	11	#7	11'-0"			11'-0"										
	7S02	37	#7	14'-1"			14'-1"										
	7S03	23	#7	19'-8"			19'-8"										
	7S04	218	#7	10'-6"			10'-6"										
	7S07	43	#7	12'-10"			12'-10"										
	8A07	23	#8	14'-3"	17		5'-6"	8'-9"									
	9A01	80	#9	14'-4"	17		5'-7"	8'-9"									
	9S01	80	#9	10'-0"			10'-0"										
7SS	5S95	1	#5	1'-11"			1'-11"										
7SS	5S96	1	#5	5'-1"			5'-1"										
7SS	5S97	3	#5	7'-6"			7'-6"										
7SS	A87a	1	#5	4'-8"			4'-8"										
	Varies To																
7SS	A87n	1	#5	7'-4"			7'-4"										
	5A91	26	#5	13'-5"	3			2'-5"	8'-7"	2'-5"						1'-11 K"	1'-4 K"

ABUTMENT 1 AND WINGWALLS 1 & 2

Drawing Sheet : R02S — BAR LIST

	Bar Mark	Qty	Size	Total Length	Type	'A'	'B'	'C'	'D'	'E'	'F'	'G'	'H'	'J'	'K'	'O'	'R'
EP	6S01	12	#4	11'-11"			11'-11"										
7SS	5A84	204	#5	18'-7"	H66		2'-5"	6'-1"	1'-10"	5'-10"	2'-5"						
7SS	5A86	102	#5	5'-6"	3		3'-1"	2'-5"								1'-8 K"	1'-8 K"
EP	5S58	42	#5	23'-8"			23'-8"										
EP	5S59	42	#5	24'-1"			24'-1"										
EP	5S60	8	#5	19'-6"			19'-6"										
7SS	5S91	50	#5	26'-10"			26'-10"										
7SS	5S92	50	#5	27'-5"			27'-5"										
EP	6A27	84	#6	7'-2 K"	S11		7'-2 K"								3'-6"		
7SS	6A85	212	#6	7'-3"	16	1'-0"	2'-1"	1'-2"	3'-0"						2'-1 K"		2'-1 K"
EP	6S01	96	#6	19'-6"			19'-6"										
EP	6S02	42	#6	23'-8"			23'-8"										
EP	6S03	4	#6	11'-11"			11'-11"										
EP	6S04	42	#6	24'-1"			24'-1"										
7SS	6S09	102	#6	2'-10"			2'-10"										
EP	9A26	96	#9	20'-8 K"	1	1'-3"	19'-5 K"										
EP	9A28	2	#9	13'-2"	1	1'-3"	12'-0"										
EP	9A29	2	#9	13'-2"	1	1'-3"	11'-11"										
EP	4A80	52	#4	7'-0"	H4		2'-2"	1'-6 K"	3 K"	10"	2'-2"						1 K"

APPROACH SLABS & SUSPENDED BACKWALLS

Drawing Sheet : R04S — BAR LIST

	Bar Mark	Qty	Size	Total Length	Type	'A'	'B'	'C'	'D'	'E'	'F'	'G'	'H'	'J'	'K'	'O'	'R'
7SS	4A25	462	#4	5'-0"	1	6"	4'-6"							4"			
7SS	A70a	4	#5	5'-8"	17		2'-7"	6"	2'-7"								
	Varies To																
7SS	A70i	4	#5	7'-6"	17		3'-6"	6"	3'-6"								
7SS	A70w	10	#5	6'-5"			6'-5"										
	Varies To																
7SS	A75i	10	#5	9'-1"			9'-1"										
7SS	A78a	1	#5	2'-5"			2'-5"										
	Varies To																
7SS	A78t	1	#5	28'-6"			28'-6"										
7SS	A79a	2	#5	11'-9"			11'-9"										
	Varies To																
7SS	A79t	2	#5	19'-1"			19'-1"										
7SS	A81a	1	#5	1'-6"			1'-6"										
	Varies To																
7SS	A81t	1	#5	27'-8"			27'-8"										
7SS	A82a	2	#5	18'-7"			18'-7"										
	Varies To																
7SS	A82t	2	#5	25'-11"			25'-11"										
7SS	5A67	480	#5	3'-9"	1	7"	3'-2"							5"			
7SS	5A68	378	#5	4'-10"	H1		1'-3"	8 K"	1'-1"	6 K"	1'-3"			5"		2'-4 K"	3"
7SS	5A69	418	#5	7'-9"	H2		10 K"	2'-9"	1'-2 K"	2'-11"				2 K"		5 K"	4 K"
7SS	5A71	76	#5	9'-7"	H3		1'-6"	3'-2 K"	5"	2'-11 K"	1'-4"						
7SS	5A74	123	#5	5'-8"	1	7"	5'-1"							5"			
7SS	5S83	89	#5	24'-6"			24'-6"										
7SS	5S85	8	#5	24'-9"			24'-9"										
7SS	5S86	388	#5	30'-0"			30'-0"										
7SS	5S87	6	#5	11'-6"			11'-6"										
7SS	5S88	6	#5	20'-2"			20'-2"										
7SS	5S89	6	#5	20'-7"			20'-7"										
7SS	5S90	6	#5	11'-9"			11'-9"										
7SS	A76a	1	#6	2'-8"			2'-8"										
	Varies To																
7SS	A76o	1	#6	21'-11"			21'-11"										
7SS	A77a	1	#6	2'-5"			2'-5"										
	Varies To																
7SS	A77n	1	#6	26'-10"			26'-10"										
7SS	A80a	1	#6	1'-6"			1'-6"										
	Varies To																
7SS	A80t	1	#6	27'-8"			27'-8"										
7SS	A83a	1	#6	3'-6"			3'-6"										
	Varies To																
7SS	A83o	1	#6	22'-10"			22'-10"										
7SS	6S06	56	#6	30'-0"			30'-0"										
7SS	6S07	14	#6	26'-4"			26'-4"										
7SS	6S08	504	#6	25'-7"			25'-7"										
7SS	7S09	32	#7	14'-4"			14'-4"										
7SS	7S10	8	#7	12'-9"			12'-9"										
7SS	7S12	32	#7	30'-0"			30'-0"										
7SS	7S13	8	#7	12'-10"			12'-10"										
7SS	8S03	32	#8	30'-0"			30'-0"										
7SS	8S04	8	#8	16'-10"			16'-10"										

DECK AND RAILS

Drawing Sheet : R02S — BAR LIST

	Bar Mark	Qty	Size	Total Length	Type	'A'	'B'	'C'	'D'	'E'	'F'	'G'	'H'	'J'	'K'	'O'	'R'
7SS	A24a	1	#5	3'-1"			3'-1"										
	Varies To																
7SS	A24j	1	#5	7'-4"			7'-4"										
7SS	5A08	26	#5	7'-5"	17		2'-5"	2'-7"	2'-5"								
7SS	5A13	17	#5	6'-5"	17		2'-5"	1'-7"	2'-5"								
7SS	5A22	2	#5	9'-1 K"	3		6'-1 K"	1'-0"						7"	9 K"	8'-11 K"	
7SS	5A23	20	#5	4'-8"	3		2'-4"	2'-4"						1'-11 K"	1'-3 K"	3'-7 K"	
	5A50	14	#5	4'-8"	3		2'-4"	2'-4"						2'-1 K"	11 K"	3'-3 K"	
7SS	5A73	2	#5	6'-6"	3		3'-9 K"	2'-3"						1'-2 K"	1'-10 K"	5'-8 K"	
7SS	5A89	8	#5	12'-5 K"	3		7'-8"	4'-9 K"						3'-4 K"	3'-4 K"	11" K"	
7SS	5S20	7	#5	9'-2"			9'-2"										
7SS	5S47	2	#5	6'-7"			6'-7"										
7SS	5S48	5	#5	4'-3"			4'-3"										
7SS	5S49	5	#5	3'-0"			3'-0"										
7SS	5S51	11	#5	4'-1"			4'-1"										
7SS	5S52	14	#5	7'-11"			7'-11"										
7SS	5S55	7	#5	7'-8"			7'-8"										
7SS	5S56	7	#5	5'-0"			5'-0"										
7SS	5S57	24	#5	7'-0"			7'-0"										
7SS	5S75	10	#5	7'-9"			7'-9"										
7SS	5S76	5	#5	5'-5"			5'-5"										
7SS	5S77	11	#5	5'-6"			5'-6"										
7SS	5S84	2	#5	3'-8"			3'-8"										
7SS	5S97	3	#5	7'-6"			7'-6"										
	5A02	90	#5	7'-5"	17		2'-5"	2'-7"	2'-5"								
	5A11	15	#5	12'-11"	16	2'-5"	4'-7"	1'-2"	4'-9"					3'-4 K"	3'-4 K"	4'-6 K"	
	5A19	25	#5	4'-8"	3		2'-4"	2'-4"						2'-1 K"	11 K"	3'-3 K"	
	5A21	28	#5	4'-8"	3		2'-4"	2'-4"						1'-11 K"	1'-3 K"	3'-7 K"	
	5A65	76	#5	8'-4 K"	25		1'-6"	2'-3 K"	10"	2'-3 K"	1'-6"			2'-2 K"	1'-1 K"		
	5S27	24	#5	30'-0"			30'-0"										
	5S28	24	#5	35'-4"			35'-4"										
	5S29	24	#5	13'-0"			13'-0"										
	5S30	12	#5	18'-7"			18'-7"										
	5S31	13	#5	19'-0"			19'-0"										
	5S32	13	#5	19'-6"			19'-6"										
	5S33	15	#5	20'-5"			20'-5"										
	5S34	12	#5	19'-11"			19'-11"										
	5S35	50	#5	33'-9"			33'-9"										
	5S36	52	#5	31'-4"			31'-4"										
	5S37	2	#5	8'-10"			8'-10"										
	5S38	2	#5	28'-8"			28'-8"										
	5S39	2	#5	10'-2"			10'-2"										
	5S41	3	#5	19'-5"			19'-5"										
	5S42	54	#5	11'-5"			11'-5"										
	5S43	50	#5	11'-3"			11'-3"										
	5S44	125	#5	5'-2"			5'-2"										
	5S45	29	#5	18'-2"			18'-2"										
	5S53	2	#5	4'-1"			4'-1"										
	5S54	2	#5	5'-1"			5'-1"										
	5S72	19	#5	10'-6"			10'-6"										
	5S74	24	#5	18'-1"			18'-1"										
	5S78	12	#5	19'-4"			19'-4"										
	7S04	224	#7	10'-6"			10'-6"										
	7S05	38	#7	13'-9"			13'-9"										
	7S06	44	#7	12'-6"			12'-6"										
	7S11	21	#7	19'-4"			19'-4"										
	8A07	21	#8	14'-3"	17		5'-6"	8'-9"									
	9A17	82	#9	14'-3"	17		5'-6"	8'-9"									
	9S01	82	#9	10'-0"			10'-0"										
7SS	A88a	1	#5	3'-2"			3'-2"										
	Varies To																
7SS	A88n	1	#5	7'-6"			7'-6"										
	5A92	27	#5	18'-10 K"	3			2'-3"	14'-4 K"	2'-3"				1'-1"	1'-11 K"	18'-4 K"	
	5A93	25	#5	17'-2 K"	3			2'-3"	12'-8 K"	2'-3"				1'-3"	1'-10 K"	16'-5 K"	

ABUTMENT 2 AND WINGWALLS 3 & 4

Drawing Sheet : R03S — BAR LIST

	Bar Mark	Qty	Size	Total Length	Type	'A'	'B'	'C'	'D'	'E'	'F'	'G'	'H'	'J'	'K'	'O'	'R'
	A34a	2	#5	2'-0"			2'-0"										
	Varies To																
	A34h	2	#5	22'-9"			22'-9"										
	A35a	1	#5	6'-0"			6'-0"										
	Varies To																
	A35j	1	#5	8'-9"			8'-9"										
	A37a	1	#5	17'-6"			17'-6"										
	Varies To																
	A37i	1	#5	19'-10"			19'-10"										
	A46a	1	#5	12'-5"			12'-5"										
	Varies To																
	A46h	1	#5	12'-7"			12'-7"										
	A49a	1	#5	17'-1"			17'-1"										
	Varies To																
	A49i	1	#5	17'-3"			17'-3"										
	A51a	2	#5	3'-2"			3'-2"										
	Varies To																
	A51h	2	#5	19'-6"			19'-6"										
	A52a	1	#5	16'-4"			16'-4"										
	Varies To																
	A53i	1	#5	19'-6"			19'-6"										
	A54a	2	#5	7'-8"			7'-8"										
	Varies To																
	A54m	2	#5	12'-10"			12'-10"										
	A60a	1	#5	13'-3"			13'-3"										
	Varies To																
	A60h	1	#5	13'-9"			13'-9"										
	A61a	1	#5	17'-10"			17'-10"										
	Varies To																
	A61i	1	#5	18'-4"			18'-4"										
	5A30	15	#5	9'-8 K"	3		3'-3 K"	4'-3"	2'-2"				3'-0"		3'-0"	8'-5 K"	
	5A31	27	#5	7'-10 K"	20		2'-8"	3'-9"	2'-2"								
	5A32	57	#5	7'-9"	17		3'-7"	4'-2"									
	5A38	111	#5	6'-5"	17		2'-5"	1'-7"	2'-5"								
	5A40	5	#5	10'-10 K"	3		2'-2"	6'-4 K"	2'-4 K"				4'-6"		4'-6"	9'-4"	
	5A41	11	#5	8'-10 K"	20		2'-2"	4'-6 K"	2'-2"								
	5A42	5	#5	12'-2 K"	3		3'-6"	6'-4 K"	2'-4 K"				4'-6"		4'-6"	10'-4 K"	
	5A43	11	#5	9'-4 K"	20		2'-8"	4'-6 K"	2'-2"								
	5A55	5	#5	10'-0"	3		2'-2"	5'-8"	2'-2"				4'-0"		4'-0"	8'-4"	
	5A56	12	#5	8'-4 K"	20		2'-2"	4'-9"	2'-2"								
	5A57	5	#5	11'-6"	3		3'-6"	5'-8"	2'-4 K"				4'-0"		4'-0"	9'-10 K"	
	5A58	11	#5	8'-10 K"	20		2'-8"	4'-9"	2'-2"								
	5A66	102	#5	6'-6"	25		1'-6"	1'-4"	10"	1'-4"	1'-6"		1'-3 K"		7 K"		
	5S61	14	#5	25'-6"			25'-6"										
	5S62	2	#5	26'-10"			26'-10"										
	5S63	47	#5	8'-8"			8'-8"										
	5S64	43	#5	12'-6"			12'-6"										
	5S65	109	#5	4'-2"			4'-2"										
	5S67	2	#5	22'-5"			22'-5"										
	5S68	6	#5	7'-8"			7'-8"										
	5S69	2	#5	18'-0"			18'-0"										
	5S70	2	#5	28'-7"			28'-7"										
	5S71	23	#5	9'-6"			9'-6"										
	5S72	3	#5	10'-6"			10'-6"										
	5S73	4	#5	8'-6"			8'-6"										
	5S79	16	#5	20'-6"			20'-6"										
	5S80	36	#5	28'-6"			28'-6"										
	5S81	22	#5	15'-6"			15'-6"										
	5S82	193	#5	7'-6"			7'-6"										
	A47a	1	#6	12'-5"			12'-5"										
	Varies To																
	A47p	1	#6	12'-7"			12'-7"										
	A62a	1	#6	13'-3"			13'-3"										
	Varies To																
	A62p	1	#6	13'-9"			13'-9"										
	A63a	1	#6	17'-10"			17'-10"										
	Varies To																
	A63p	1	#6	18'-4"			18'-4"										
	6A44	64	#6	9'-2"	17		3'-7"	4'-7"									
	6S05	26	#6	8'-6"			8'-6"										
	A39a	1	#7	17'-6"			17'-6"										
	Varies To																
	A39p	1	#7	19'-10"			19'-10"										
	A53a	1	#7	16'-4"			16'-4"										
	Varies To																
	A53p	1	#7	19'-6"			19'-6"										
	7A33	32	#7	9'-0"	17		3'-7"	5'-5"									
	7S08	33	#7	9'-6"			9'-6"										
	8S01	32	#8	9'-6"			9'-6"										
	8S02	33	#8	10'-6"			10'-6"										
	A39a	2	#5	12'-1"			12'-1"										
	Varies To																
	A39h	2	#5	14'-2"			14'-2"										
	A45a	2	#5	7'-8"			7'-8"										
	Varies To																
	A45m	2	#5	7'-11"			7'-11"										
	A46a	1	#6	17'-1"			17'-1"										
	Varies To																
	A46p	1	#6	17'-3"			17'-3"										
	A59a	2	#5	8'-2"			8'-2"										
	Varies To																
	A59m	2	#5	9'-2"			9'-2"										

RETAINING WALLS 1 THRU 4

MATERIAL/COATING CODE TO THE LEFT OF BAR MARK ADDED BY PCL

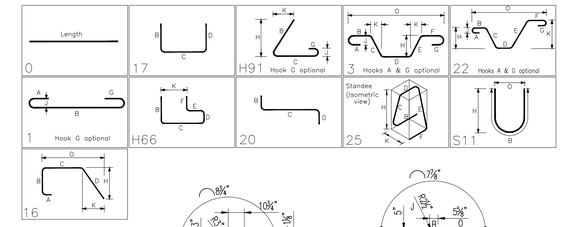

Legend:

IF Inside Face
OF Outside Face
NF Near Face
FF Far Face
EF Each Face
V Vertical
H Horizontal
EW Each Way
T Top
SB Support Bars
B/Bot Bottom
BB Bond Beam
MV Masonry Vert.
MD Masonry Dwls

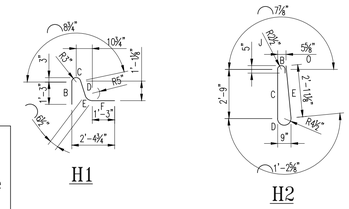

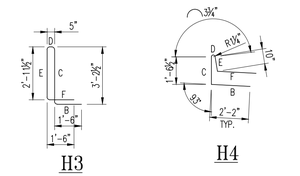

SPECIAL BEND DETAILS

No.	Description	Date	By
2	FINAL APPROVAL PRINT	03/09/15	CPS
1	APPROVAL PRINT	02/13/15	CPS

Revisions and Issue Record

The full intent and purpose of this drawing is the placing of reinforcing steel bars ONLY. It is NOT to be used as a means of communication between the Architect, Engineer, Contractor or any other Sub-trades.

THIS DRAWING IS NOT TO BE SCALED.

HarrisRebar Barker Steel — National Strength. Local Service.

DETAILED AT:
CANAAN
NEW HAMPSHIRE

Project: BRIDGE 43 S REPLACEMENT
I-91 HARTFORD VT

Drawing: I-91 SOUTHBOUND
BAR SCHEDULES

Customer: PCL CIVIL CONSTRUCTORS

Engineer: G LAROCHE

Refer to Release:

Date	Drawn	Chkd.	JOB No.	Dwg. No.
02/09/15	CPS		33505535	R06S

W:\csample\Projects\33505535\Placing Drawings\DWGs\R01S.dwg