CONSTRUCTION LEADERS

LETTER OF TRANSMITTAL			
DATE:	**May 7, 2015**	PCL JOB NO:	**5515002**
ATTN:	**Chris Barker**	TRANSMITTAL NO:	**068**

To: **State of Vermont Agency of Transportation**
One National Life Drive
Montpelier, VT 05633-5001
(802) 828-0053

Re: Hartford Lateral Slide
Project No.: IM 091-2(79)
Contract ID.: 12A132 County: Windsor PCL FILE NO: 5515002-44

WE ARE SENDING X Attached ____ Under separate cover via **Email & SP** the following:
X Shop drawings ____ Prints X Plans ____ Samples ____ Specifications
____ Copy of Letter ____ Change Order X Other

COPIES	SPEC.	REVISION	DESCRIPTION
1	**Spec. Prov. #109**		**Contractor-Fabricated Pre-Cast Concrete Structures**

TRANSMITTED for as checked below:

X For approval ____ Approved as submitted ____ Resubmit **1** Copies for approval
____ For your use ____ Approved as noted ____ Submit ____ Copies for distribution
____ As requested ____ Returned for corrections ____ Return ____ Corrected prints
____ For review and comment

Remarks:

Please return an email of this approved submittal to Erich Heymann (ewheymann@pcl.com) and Jeremy Mackling (jmackling@pcl.com).

We request the review and return of this submittal within 10 days. Please advise if this request cannot be met so we can plan accordingly.

By: **Erich Heymann,** Project Engineer

COPY TO: Project Files

CONSTRUCTION LEADERS

SUBMITTAL NO. : 44
Contractor-Fabricated Pre-Cast Concrete Structures

Item No.	Specification	Description
1	Spec. Prov. #109	Contractor-Fabricated Pre-Cast Concrete Structures

PROJECT:
HARTFORD LATERAL SLIDE
PROJECT NO.: IM 091-2(79)
CONTRACT ID.: 12A132

OWNER:
STATE OF VERMONT AGENCY OF TRANSPORTATION

ENGINEER OF RECORD:
STATE OF VERMONT AGENCY OF TRANSPORTATION

CONTRACTOR:
PCL CIVIL CONSTRUCTORS, INC.

MAY 7, 2015

3810 Northdale Blvd., Suite 200; Tampa, FL • (813) 264-9500 • (813) 264-6689 (fax)

Vermont Agency of Transportation
I-91
Windsor County
Project Number: IM 091-2(79)

Hartford Lateral Slide

Contractor-Fabricated Pre-Cast Concrete Structures

Approach Slabs

Prepared By,

Erich Heymann

May 2, 2015

PCL Civil Constructors Inc.
3810 Northdale Blvd. Suite 200
Tampa, Florida 33624
813-264-9500

TABLE OF CONTENTS

FABRICATION DRAWINGS (ORIGINAL CONTRACT DRAWINGS) 1
DESIGN & ANALYSIS OF LIFTING ATTACHMENTS 5
POUR & STORAGE LOCATION 16
ERECTION CALCS 18
ERECTION DRAWINGS 26
QUALITY CONTROL PROCESSES 35

REFERENCED SUBMITTALS

APPROVED REINFORCING STEEL DRAWINGS 37
APPROVED CONCRETE MIX DESIGN 42
GROUTING PROCEDURE ..... SUBMITTAL IN PROCESS

FABRICATION DRAWINGS (ORIGINAL CONTRACT DRAWINGS)

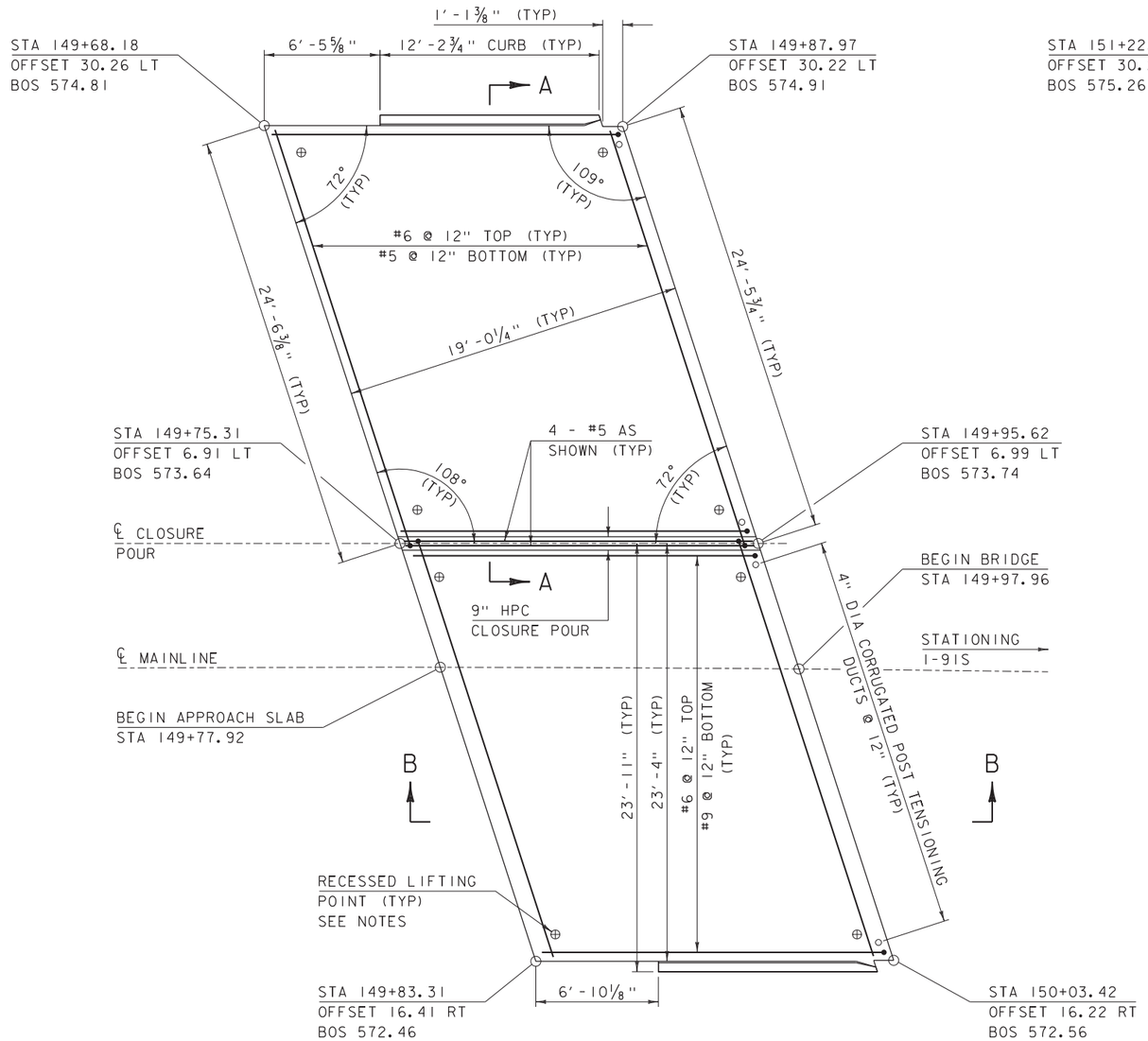

APPROACH SLAB 1 PLAN

SCALE 1/4" = 1'-0"

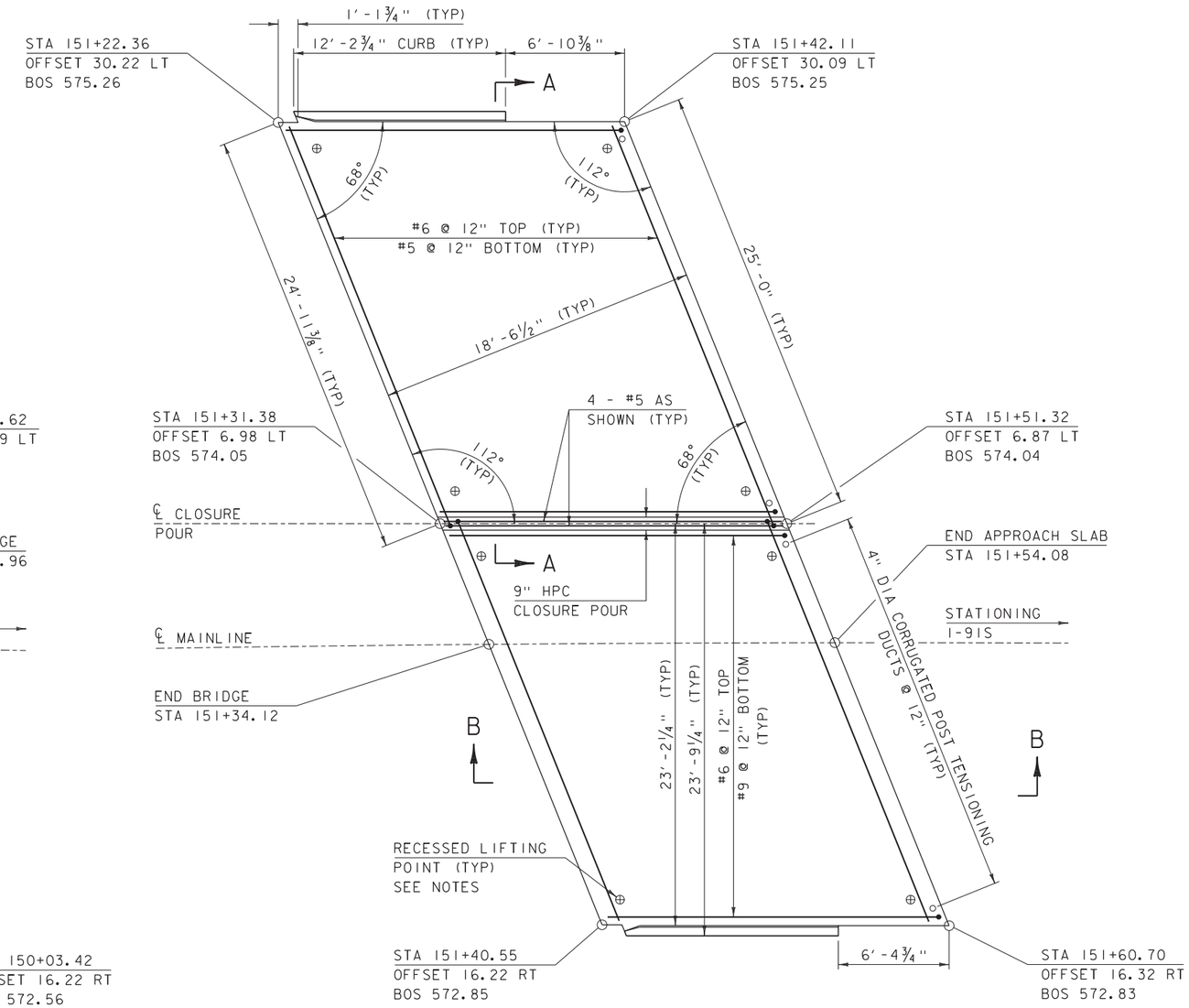

APPROACH SLAB 2 PLAN

SCALE 1/4" = 1'-0"

NOTES:

1) ALL APPROACH SLAB REINFORCING STEEL SHALL BE LEVEL II OR HIGHER.

2) BOS = BOTTOM OF SLAB

3) LIFTING POINTS SAHLL BE DESIGNED BY OTHERS AND CALCULATIONS INCLUDED WITH SUBMITTAL.

NOTE:

NF = NEAR FACE
FF = FAR FACE
EF = EACH FACE
3" CLEAR, UNLESS OTHERWISE SPECIFIED ON THE PLANS.
2'-2" BAR LAP UNLESS OTHERWISE SPECIFIED ON THE PLANS.

PROJECT NAME: HARTFORD	
PROJECT NUMBER: IM 091-2(79)	
FILE NAME: s12a132apslabs_43S.dgn	PLOT DATE: 15-DEC-2014
PROJECT LEADER: K. HIGGINS	DRAWN BY: K. FRIEDLAND
DESIGNED BY: G. LAROCHE	CHECKED BY: W. LAMMER
APPROACH SLAB DETAILS 43S	SHEET 97 OF 166

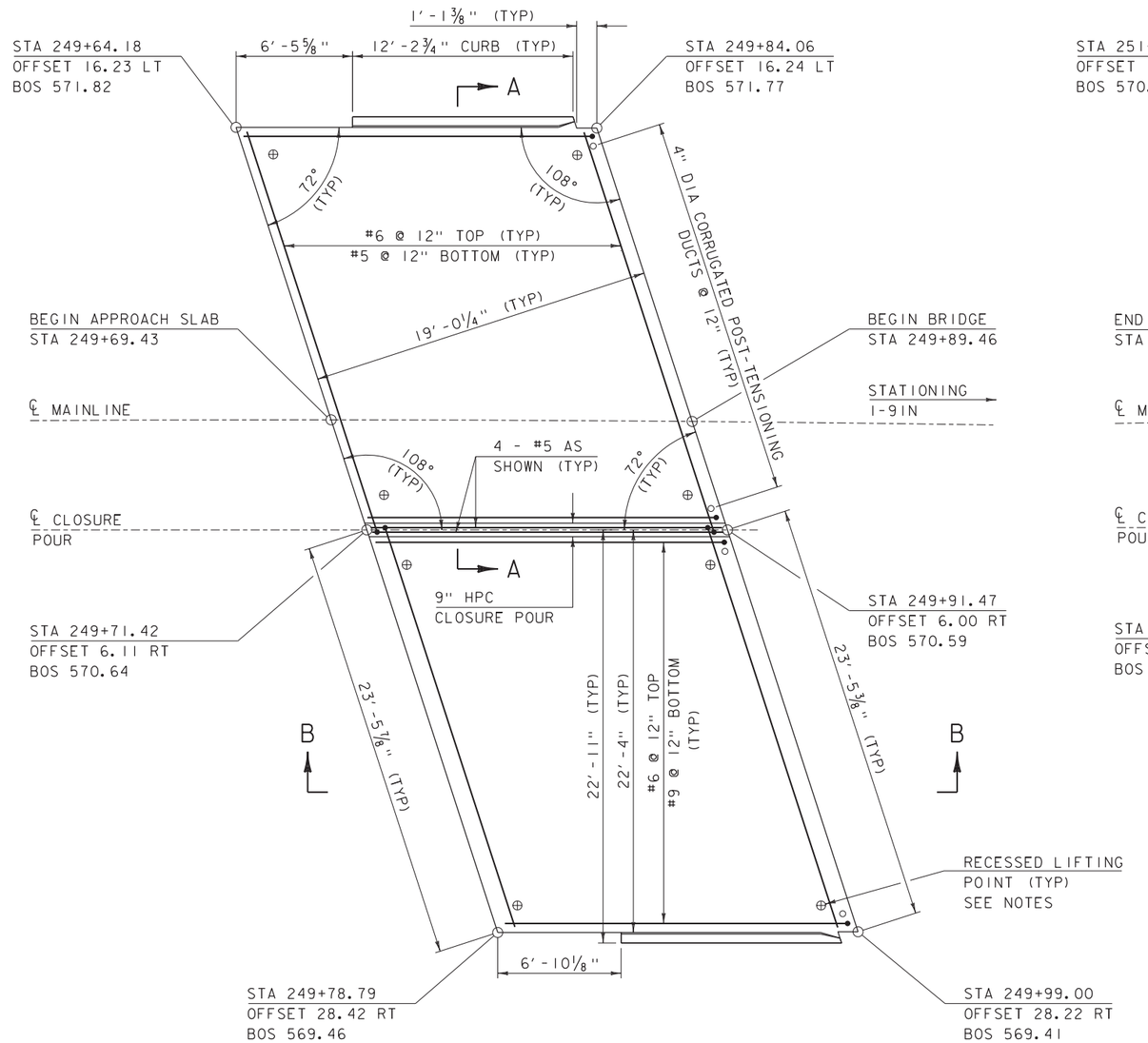

APPROACH SLAB 3 PLAN

SCALE 1/4" = 1'-0"

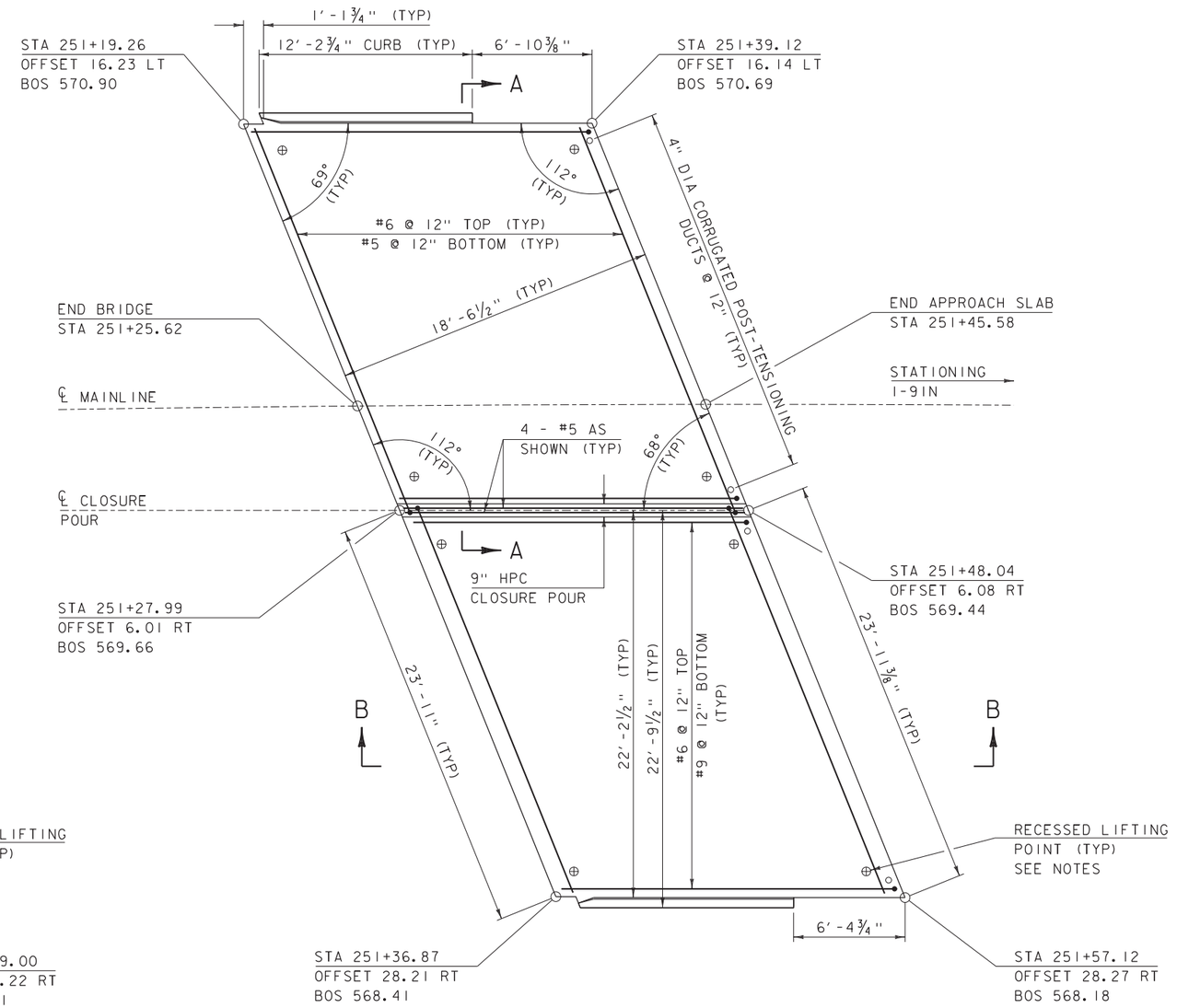

APPROACH SLAB 4 PLAN

SCALE 1/4" = 1'-0"

NOTES:

1) ALL APPROACH SLAB REINFORCING STEEL SHALL BE LEVEL II OR HIGHER.

2) BOS = BOTTOM OF SLAB

3) LIFTING POINTS SAHLL BE DESIGNED BY OTHERS AND CALCULATIONS INCLUDED WITH SUBMITTAL.

NOTE:

NF = NEAR FACE
FF = FAR FACE
EF = EACH FACE
3" CLEAR, UNLESS OTHERWISE SPECIFIED ON THE PLANS.
2'-2" BAR LAP UNLESS OTHERWISE SPECIFIED ON THE PLANS.

PROJECT NAME: HARTFORD	
PROJECT NUMBER: IM 091-2(79)	
FILE NAME: s12a132apslabs_43N.dgn	PLOT DATE: 15-DEC-2014
PROJECT LEADER: K. HIGGINS	DRAWN BY: K. FRIEDLAND
DESIGNED BY: G. LAROCHE	CHECKED BY: W. LAMMER
APPROACH SLAB DETAILS 43N	SHEET 98 OF 166

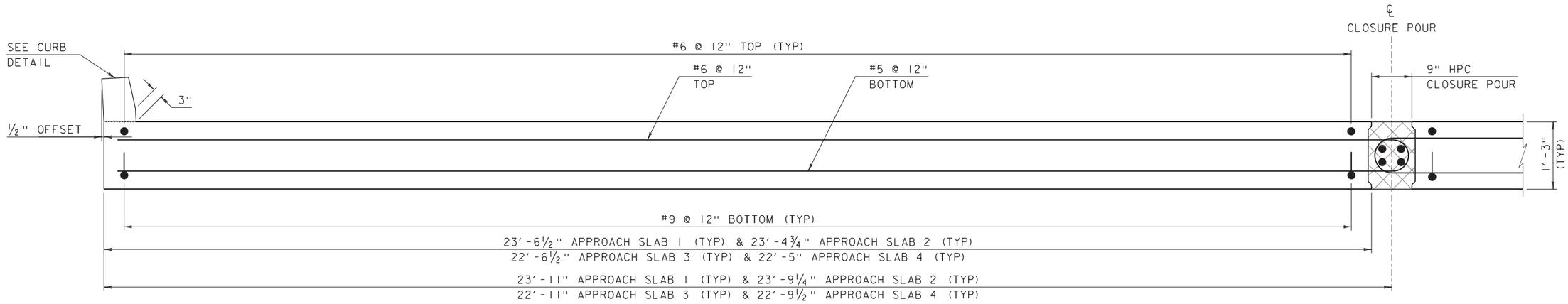

SECTION A-A

SCALE 1" = 1'-0"

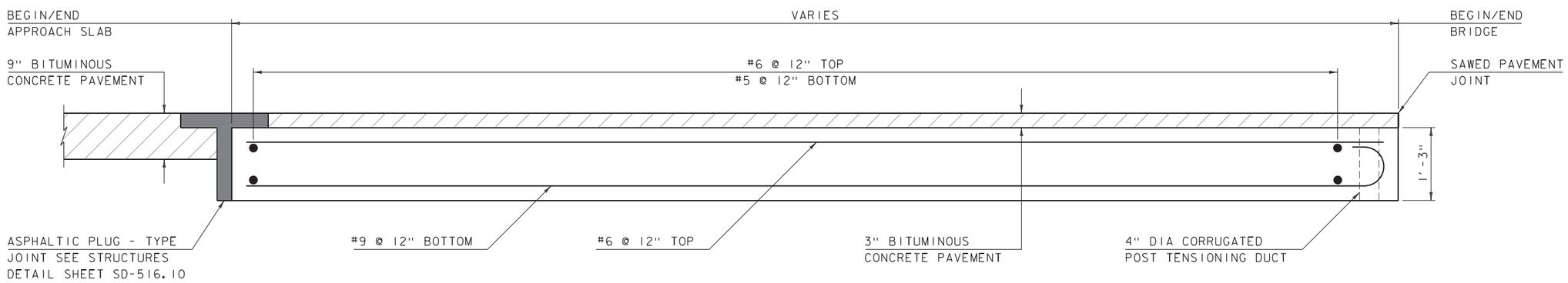

SECTION B-B

SCALE 1" = 1'-0"

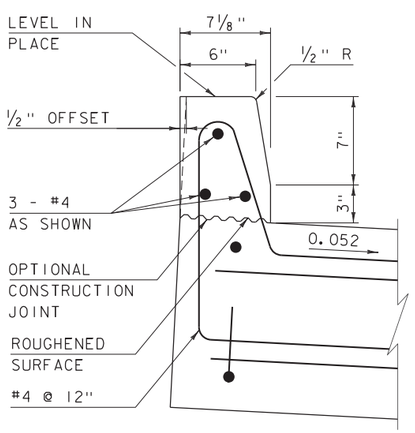

CURB DETAIL

SCALE 2" = 1'-0"

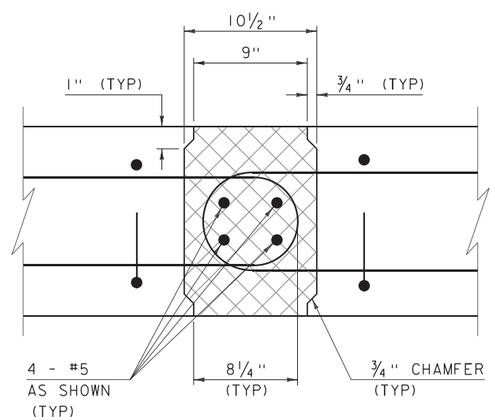

JOINT DETAIL SECTION

SCALE 2" = 1'-0"

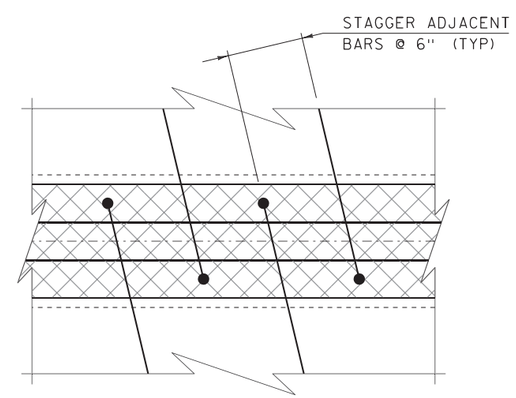

JOINT DETAIL PLAN

SCALE 2" = 1'-0"

NOTE:

NF = NEAR FACE
FF = FAR FACE
EF = EACH FACE
▲ = CUT TO FIT IN FIELD
3" CLEAR, UNLESS OTHERWISE SPECIFIED ON THE PLANS.
2'-2" BAR LAP UNLESS OTHERWISE SPECIFIED ON THE PLANS.

NOTES:

1) ALL APPROACH SLAB REINFORCING STEEL SHALL BE LEVEL II OR HIGHER.

PROJECT NAME: HARTFORD	
PROJECT NUMBER: IM 091-2(79)	
FILE NAME: s12a132apslabs_43S.dgn	PLOT DATE: 15-DEC-2014
PROJECT LEADER: K. HIGGINS	DRAWN BY: K. FRIEDLAND
DESIGNED BY: G. LAROCHE	CHECKED BY: W. LAMMER
APPROACH SLAB DETAILS	SHEET 99 OF 166

DESIGN & ANALYSIS OF LIFTING ATTACHMENTS

Vermont Agency of Transportation
I-91
Windsor County
Project Number: IM 091-2(79)

Hartford Lateral Slide

Calculations for Temporary Structures including:

Approach Slab Lifting Attachments

Submitted By,

Tim Davis, P.E.
VT P.E. 97183

Erich Heymann, E.I.
E.I. #1100014027

STATE OF VERMONT
TIMOTHY DAVIS
NO. 97183
CIVIL
LICENSED
PROFESSIONAL ENGINEER

May 7 2015 8:39 AM

CoSign

May 5, 2015

PCL Civil Constructors Inc.
3810 Northdale Blvd. Suite 200
Tampa, Florida 33624
813-264-9500

Job Information

	Engineer	Checked	Approved
Name:			
Date:	10-Nov-14		

Structure Type	SPACE FRAME

Number of Nodes	529	Highest Node	1009
Number of Elements	15	Highest Beam	498
Number of Plates	475	Highest Plate	475

Number of Basic Load Cases	1
Number of Combination Load Cases	0

Included in this printout are data for:

All	The Whole Structure

Included in this printout are results for load cases:

Type	L/C	Name
Primary	1	LOAD CASE 1

Section Properties

Prop	Section	Area (in^2)	I_{yy} (in^4)	I_{zz} (in^4)	J (in^4)	Material
2	Cir 0.96	0.724	0.042	0.042	0.083	STEEL
3	PIPS60	5.220	26.500	26.500	52.924	STEEL
4	Cir 1.00	0.785	0.049	0.049	0.098	STEEL

Plate Thickness

Prop	Node A (in)	Node B (in)	Node C (in)	Node D (in)	Material
1	15.000	15.000	15.000	15.000	CONCRETE

Selfweight : 1 LOAD CASE 1

Direction	Factor
Y	-1.000

Beam Maximum Forces by Section Property

Section		Axial	Shear		Torsion	Bending	
		Max Fx (kip)	Max Fy (kip)	Max Fz (kip)	Max Mx (kip-in)	Max My (kip-in)	Max Mz (kip-in)
Cir 0.96	Max +ve		0.013	0.000	0.008	0.022	0.683
	Max -ve	-51.844	-0.014	-0.000	-0.006	-0.029	-0.322
PIPS60	Max +ve	25.274	0.198		0.007	0.007	
	Max -ve		-0.198	-0.000	-0.003	-0.007	-13.787
Cir 1.00	Max +ve		0.000	0.000	0.000	0.021	0.025
	Max -ve	-22.342	-0.000	-0.000	-0.000	-0.021	-0.025

Reaction Summary

	Node	L/C	Horizontal	Vertical	Horizontal	Moment		
			FX (kip)	FY (kip)	FZ (kip)	MX (kip-in)	MY (kip-in)	MZ (kip-in)
Max FX	1001	1:LOAD CASE	**-0.000**	90.532	-0.000	-0.000	-0.000	-0.001
Min FX	1001	1:LOAD CASE	**-0.000**	90.532	-0.000	-0.000	-0.000	-0.001
Max FY	1001	1:LOAD CASE	-0.000	**90.532**	-0.000	-0.000	-0.000	-0.001
Min FY	1001	1:LOAD CASE	-0.000	**90.532**	-0.000	-0.000	-0.000	-0.001
Max FZ	1001	1:LOAD CASE	-0.000	90.532	**-0.000**	-0.000	-0.000	-0.001
Min FZ	1001	1:LOAD CASE	-0.000	90.532	**-0.000**	-0.000	-0.000	-0.001
Max MX	1001	1:LOAD CASE	-0.000	90.532	-0.000	**-0.000**	-0.000	-0.001
Min MX	1001	1:LOAD CASE	-0.000	90.532	-0.000	**-0.000**	-0.000	-0.001
Max MY	1001	1:LOAD CASE	-0.000	90.532	-0.000	-0.000	**-0.000**	-0.001
Min MY	1001	1:LOAD CASE	-0.000	90.532	-0.000	-0.000	**-0.000**	-0.001
Max MZ	1001	1:LOAD CASE	-0.000	90.532	-0.000	-0.000	-0.000	**-0.001**
Min MZ	1001	1:LOAD CASE	-0.000	90.532	-0.000	-0.000	-0.000	**-0.001**

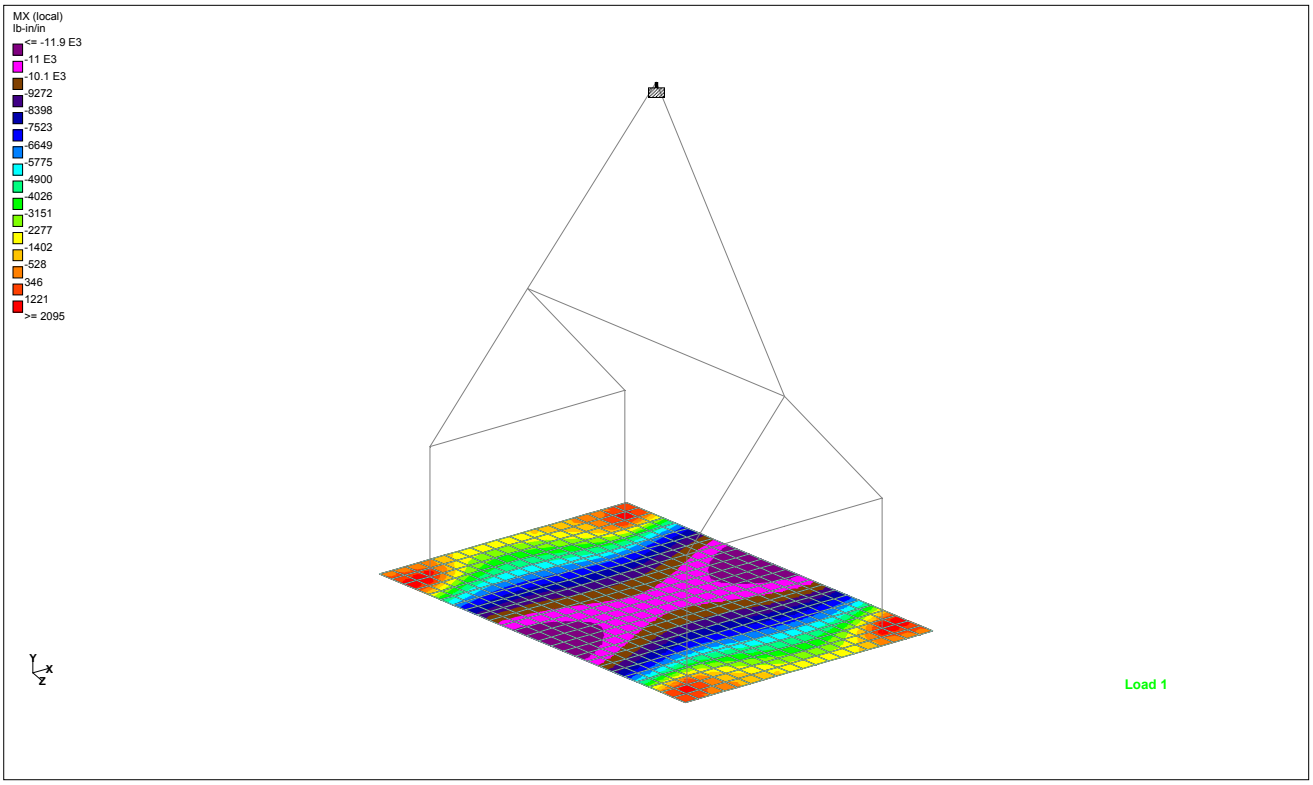

Local X Moment

Max Moment = 11.9 k-ft/ft, requires # 9 bars at 26" OC (see next sheet).
#9's provided at 12" O.C. so OK

Overall Shear = 45 kips / (18' x 1.25') = 2 ksf = 13 psi < $2\sqrt{f'c}$ ----> OK

PCL CONSTRUCTION LEADERS

Project No: _____ **By:** TMD **Date:** 4/30/2015

Project: _____ **Checked By:** _____ **Date:** _____

Calculation Of Required Reinforcing Rebars

Subject: _____

Calculation For: _____

Input

M (DL)=	11.9	FT.KIPS	Factor DL=	1.5	
M (LL)=		FT.KIPS	Factor LL=	1	
Mu=		FT.KIPS	f'c=	5	KSI
d=	12	IN	fy=	60	KSI
b=	12	IN	As(prov)=	0	IN^2

Output

Moment (Mu)=	17.9	FT.KIPS			
A=	31.76		X=	20.06391	
B=	-648.0		Y=	0.336093	
C=	214.2				
Δ=	392688				
β_1=	0.80	ACI (10.2.7.3)	(**A**) As^2 +(**B**) As + (**C**) =0		
ρ Min=	0.0035	ACI (10.5.1)			
ρ Max=	0.0252	ACI (10.3.3)	As=	0.336093	IN^2
ρ Actual=	0.0023		a=	0.40	IN
			Cc=	20	KIPS
Required As=	0.34	IN^2	T=	20	KIPS
Min As=	0.51	IN^2	**Use the minimum of 1.33 Req'd As or As min**		
Max As=	3.62	IN^2	ϕMn=	0.0	FT.KIPS

Final As (IN^2)= **0.45**

% of ρ Max= **12.3412** %

Bar Selection:

5	#3	0.55	or	#3 @	2.95	o.c.
3	#4	0.60	or	#4 @	5.37	o.c.
2	#5	0.62	or	#5 @	8.32	o.c.
2	#6	0.88	or	#6 @	11.81	o.c.
1	#7	0.60	or	#7 @	16.11	o.c.
1	#8	0.79	or	#8 @	21.21	o.c.
1	#9	1.00	or	#9 @	26.85	o.c.
1	#10	1.27	or	#10 @	34.09	o.c.
1	#11	1.56	or	#11 @	41.88	o.c.

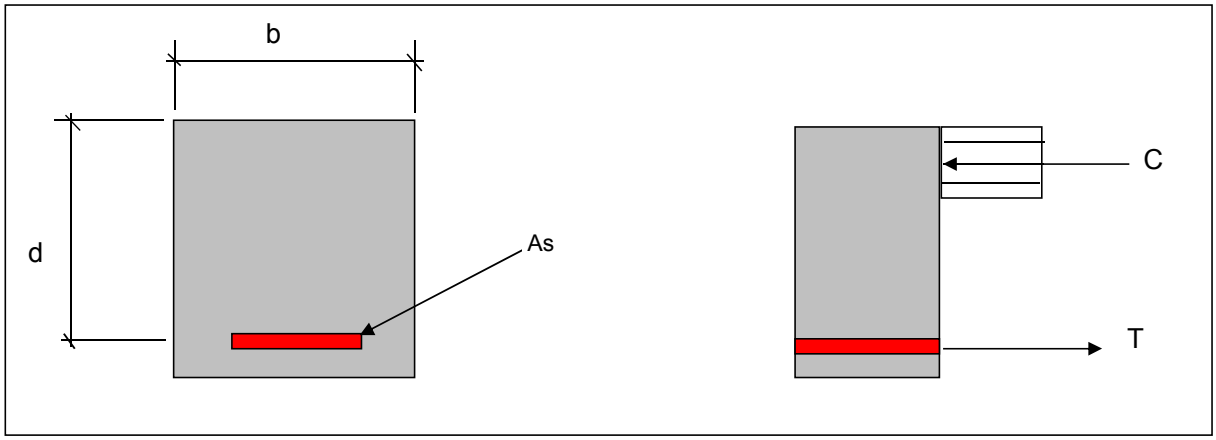

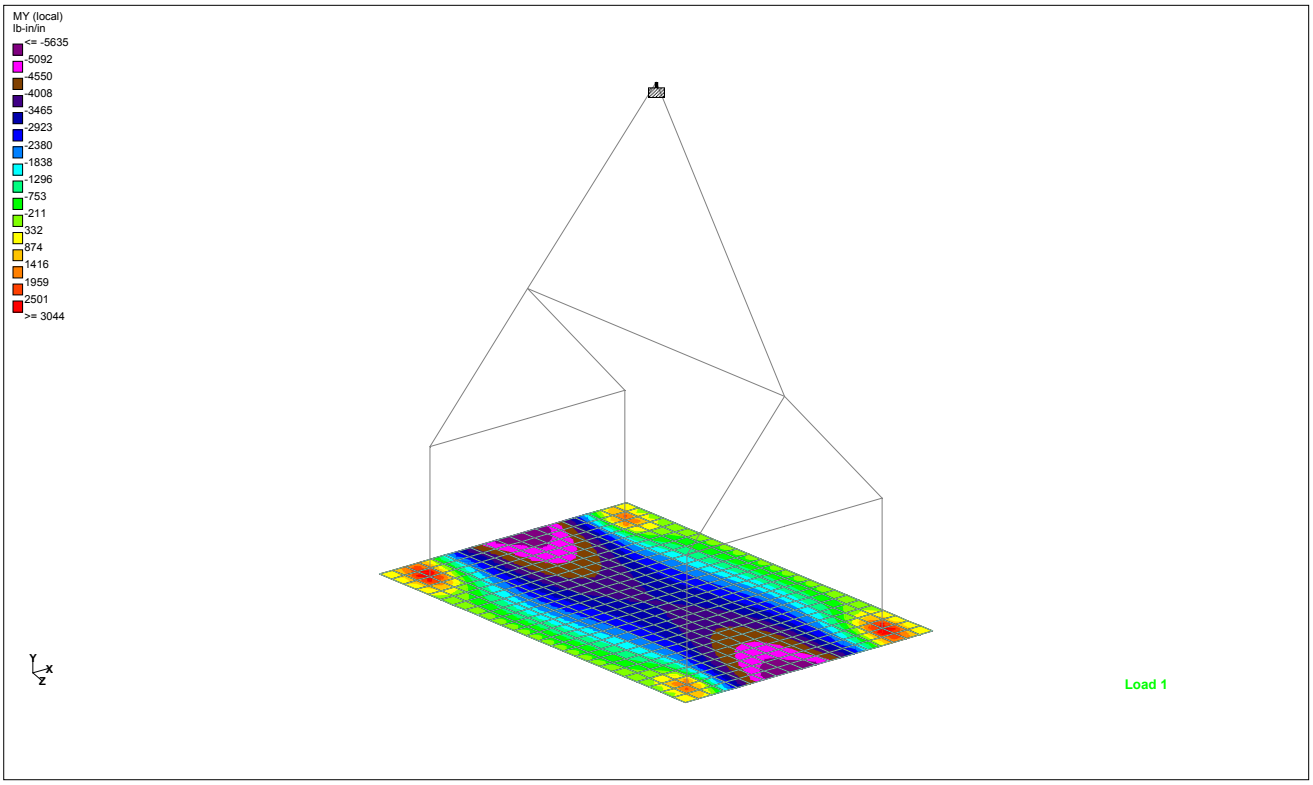

Local Y Moment

Max Moment = 5.6 k-ft/ft, requires # 5 bars at 16" OC (see next sheet). #5's provided at 12" O.C. so OK

PCL CONSTRUCTION LEADERS

Project No: _____ **By:** TMD **Date:** 4/30/2015

Project: _____ **Checked By:** _____ **Date:** _____

Calculation Of Required Reinforcing Rebars

Subject: _____

Calculation For: _____

Input

M (DL)=	5.63	FT.KIPS	Factor DL=	1.5	
M (LL)=		FT.KIPS	Factor LL=	1	
Mu=		FT.KIPS	f'c=	5	KSI
d=	11	IN	fy=	60	KSI
b=	12	IN	As(prov)=	0	IN^2

Output

Moment (Mu)=	8.4	FT.KIPS			
A=	31.76		X=	18.52781	
B=	-594.0		Y=	0.172192	
C=	101.3				
Δ=	339960				
β_1=	0.80	ACI (10.2.7.3)	(**A**) As^2 +(**B**) As + (**C**) =0		
ρ Min=	0.0035	ACI (10.5.1)			
ρ Max=	0.0252	ACI (10.3.3)	As=	0.172192	IN^2
ρ Actual=	0.0013		a=	0.20	IN
			Cc=	10	KIPS
Required As=	0.17	IN^2	T=	10	KIPS
Min As=	0.47	IN^2	**Use the minimum of 1.33 Req'd As or As min**		
Max As=	3.32	IN^2	ϕMn=	0.0	FT.KIPS

Final As (IN^2)= **0.23**

% of ρ Max= **6.89761** %

Bar Selection:

3	#3	0.33	or	#3 @	5.76	o.c.
2	#4	0.40	or	#4 @	10.48	o.c.
1	#5	0.31	or	#5 @	16.24	o.c.
1	#6	0.44	or	#6 @	23.06	o.c.
1	#7	0.60	or	#7 @	31.44	o.c.
1	#8	0.79	or	#8 @	41.39	o.c.
1	#9	1.00	or	#9 @	52.40	o.c.
1	#10	1.27	or	#10 @	66.55	o.c.
1	#11	1.56	or	#11 @	81.74	o.c.

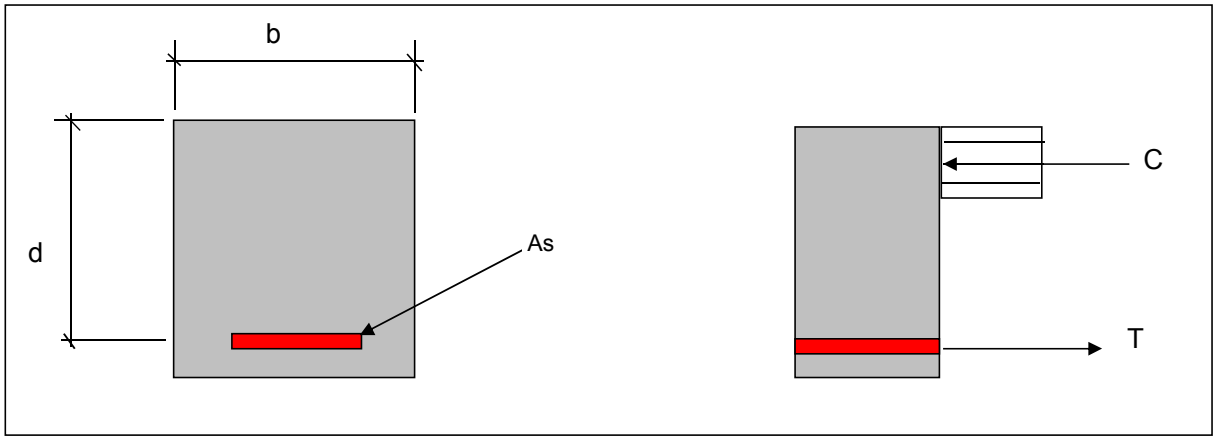

Software licensed to PCL Constructors Inc.	Job No	Sheet No 1	Rev
	Part		
Job Title	Ref		
	By	Date 10-Nov-14	Chd
Client	File Hartford Approach.std	Date/Time 28-Apr-2015 13:04	

approach slab rigging and punching shear

each support point - 22.3 kips

pullout perimeter = 10+10+6+6 = 32"
Pullout depth = 6" min

Shear area = 6" x 32" = 192"

22.3kips x 1.5 / (.75) = 44.6 kip

shear load = 44.6k / 192" = 232psi

$4\sqrt{f'c}$ = 282 psi --> OK

each coil rod = 18 kips ---> OK

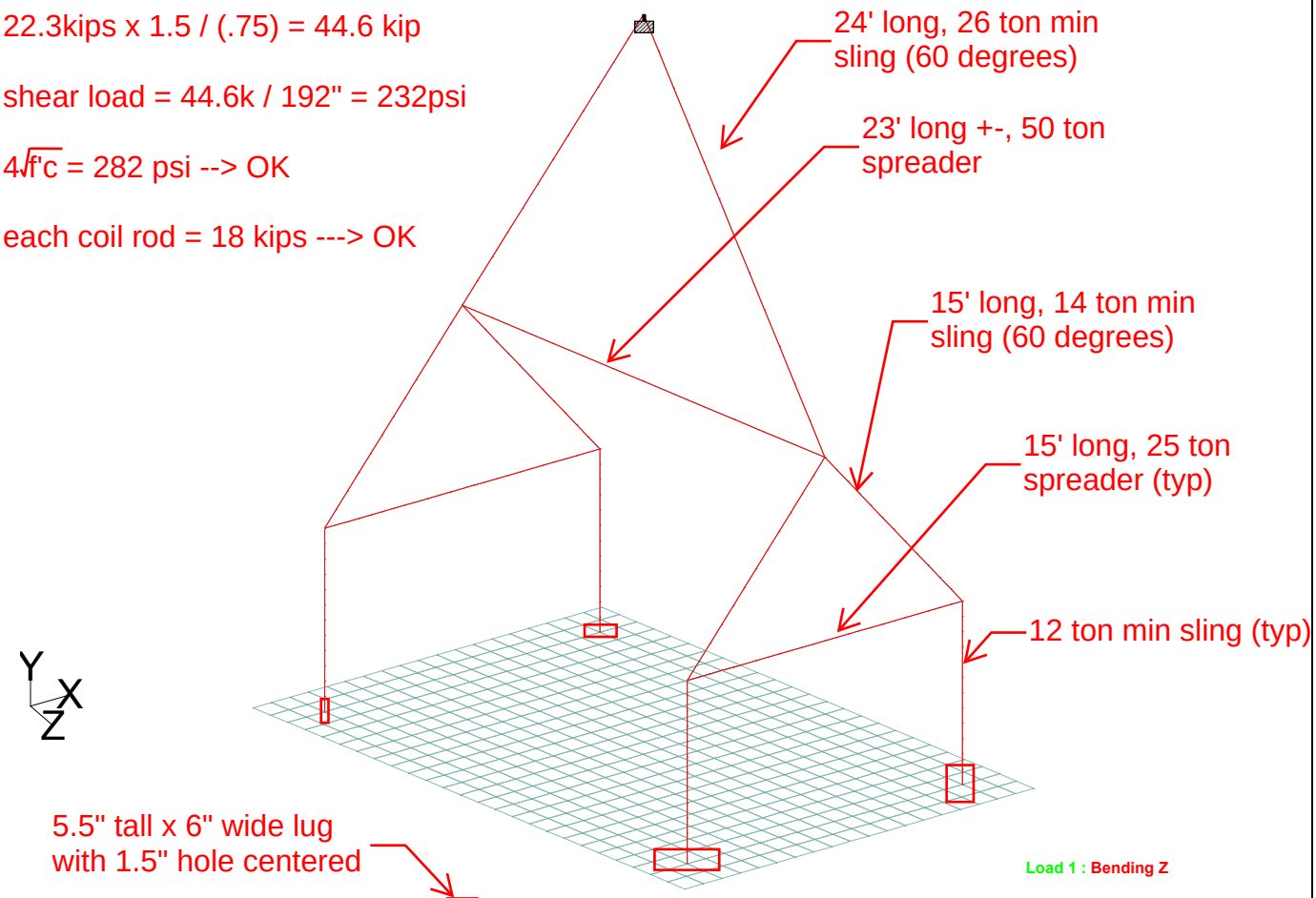

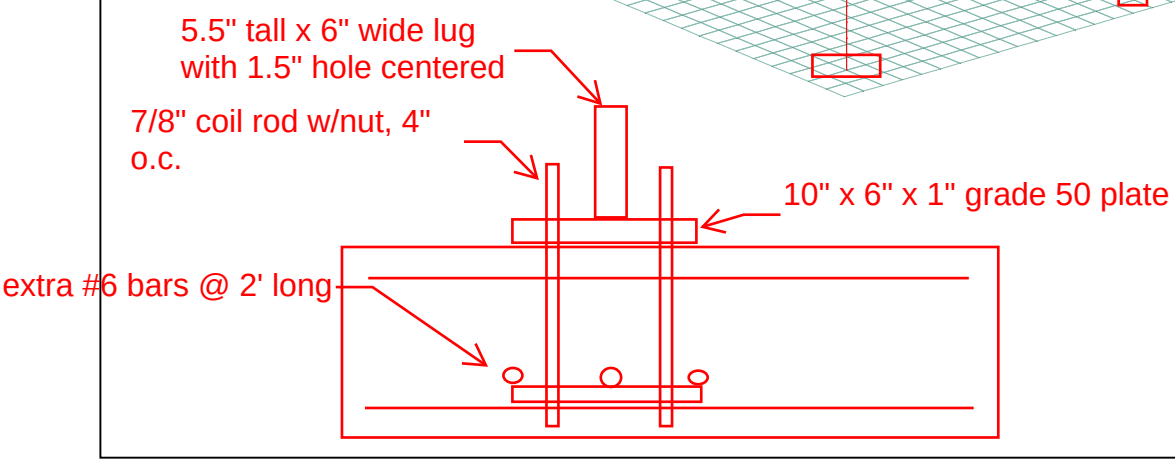

B-12 Coil Rod

Dayton/Richmond B-12 Coil Rod is available in 1/2" to 1-1/2" diameters in 12' lengths. Field cutting can be accomplished with bolt cutters or carborundum blades.

B-12 threaded rod can be used with Coil Ties in many forming combinations to tie formwork, for adjustable ties, for concrete embedments and/or emergency ties.

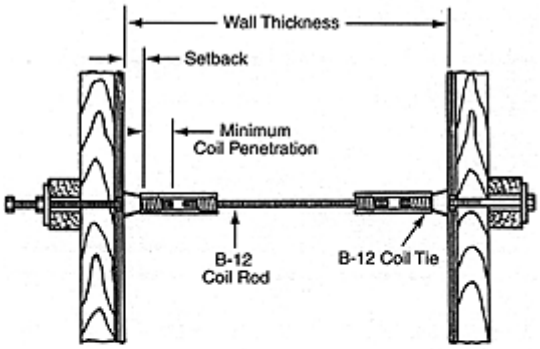

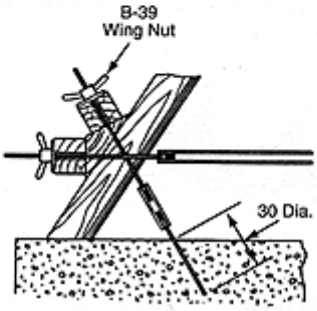

B-12 Coil Rod Selection Chart						
Coil Rod Diameter	Safe Working Loads Tension (lbs.)	Safe Working Loads Shear (lbs.)	Minimum Root Area (sq. in.)	Tensile Stress (psi.)	Yield Stress (psi.)	Minimum Coil Penetration
1/2"	9,000	6,000	.1385	130,000	110,000	2"
5/8"	12,000	8,000	.2124	113,000	96,000	2-1/4"
3/4"	18,000	12,000	.3079	117,000	100,000	2-1/4"
7/8"	31,000	20,600	.4477	117,000	100,000	2-1/2"
1"	38,000	25,300	.5410	140,000	120,000	2-1/2"
1-1/8"	45,000	30,000	.7163	126,600	105,000	2-1/2"
1-1/4"	56,000	37,500	.9161	123,000	105,000	2-1/2"
1-1/2"	68,000	45,300	1.3892	98,000	85,000	3"

SWL provides a factor of safety of approximately 2 to 1.

Design of Lifting Beams Connections

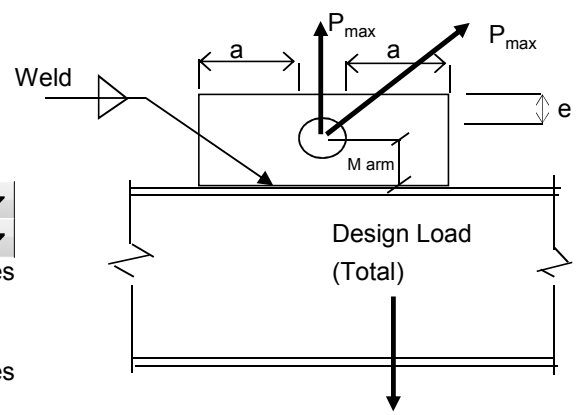

	Service Load =	22.3	
	Impact factor =	1.5	
Input:	Design Load =	33.45	Kips
	Design Angle =	90	
	# of Legs of Sling =	1	
	d =	1.5	inches
	t =	1	inch
	F_u =	58	ksi
	a =	2	inches
	F_y =	36	ksi
	e =	2	inches
	h =	5.5	inches
	l =	6	inches

px =	0.00	kips
py =	33.45	kips
Pmax =	33.45	kips

Ultimate Tensile Load

P_u =	$2*a*t*F_u$ =	232.0	kips
P_{allow} =	$0.20*P_u$ =	**46.40**	kips

Design Load is O.K.!

46.40 > 33.45

Lug Tearout (P_{max} Diagonal)

	Load Factor =	1	
P_{allow} =	$1.67*F_b*t*e^2/d$ =	**105.81**	kips
	e_{min} =	1.01	inches

Design Load is O.K.!

105.81 > 33.45

Allowable Crushing

$P_p = 0.9*F_y*t*d$ = **48.60** kips

Design Load is O.K.!

48.60 > 33.45

Shear

$P_u = 2*(0.4)*F_y*e*t$ = **57.60** kips

Design Load is O.K.!

57.60 > 33.45

Weld Design

M_{arm} =	2.75	inches	f_m =	0.00	kips/inch
$S_w = d^2/3$ =	10.08	in^2	f_v =	3.04	kips/inch
A_w =	11	in	f_t =	0.00	kips/inch
			f_w =	3.04	kips/inch

use 1/4 fillet weld

POUR & STORAGE LOCATION

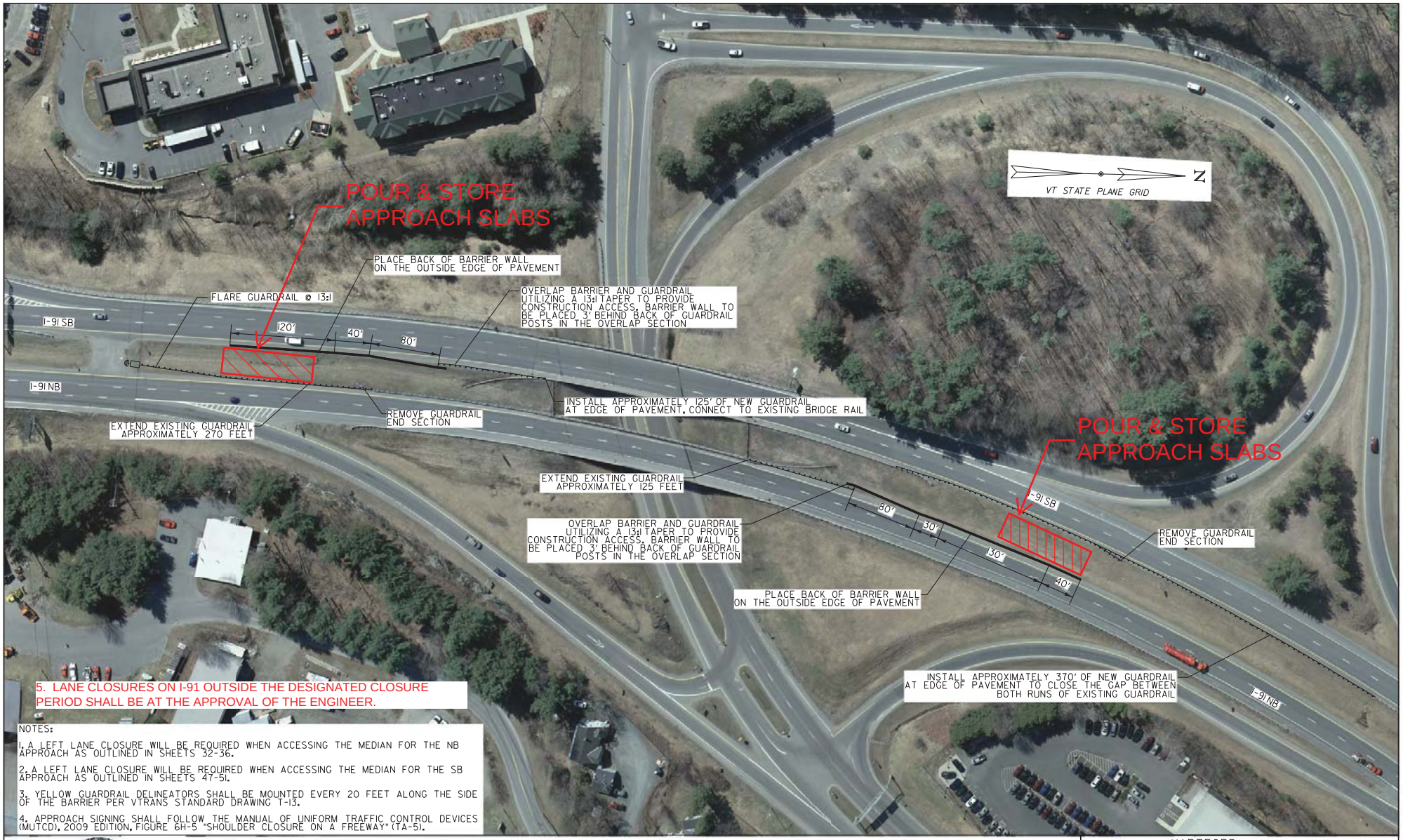

5. LANE CLOSURES ON I-91 OUTSIDE THE DESIGNATED CLOSURE PERIOD SHALL BE AT THE APPROVAL OF THE ENGINEER.

NOTES:

1. A LEFT LANE CLOSURE WILL BE REQUIRED WHEN ACCESSING THE MEDIAN FOR THE NB APPROACH AS OUTLINED IN SHEETS 32-36.

2. A LEFT LANE CLOSURE WILL BE REQUIRED WHEN ACCESSING THE MEDIAN FOR THE SB APPROACH AS OUTLINED IN SHEETS 47-51.

3. YELLOW GUARDRAIL DELINEATORS SHALL BE MOUNTED EVERY 20 FEET ALONG THE SIDE OF THE BARRIER PER VTRANS STANDARD DRAWING T-13.

4. APPROACH SIGNING SHALL FOLLOW THE MANUAL OF UNIFORM TRAFFIC CONTROL DEVICES (MUTCD), 2009 EDITION, FIGURE 6H-5 "SHOULDER CLOSURE ON A FREEWAY" (TA-5).

STATE OF VERMONT
STEPHEN S. SAWYER
No. 4043
REGISTERED PROFESSIONAL ENGINEER
4/23/15

Vermont Agency of Transportation
RECEIVED
CK'D BY CB/NA OK'D BY JS
April 23, 2015
RESUBMIT NO Approved AsNoted
BY KH DATE 4-24-2015

I-91 MEDIAN WORK

SCALE 1" = 50'-0"
50 0 50

PREPARED BY:
SEBAGO TECHNICS

PROJECT NAME: HARTFORD
PROJECT NUMBER: IM 091-2(79)

FILE NAME: s12a026_Median Closure.dgn
PROJECT LEADER: K. HIGGINS
DESIGNED BY: B. LYON
I-91 MEDIAN WORK

PLOT DATE: 04/23/15
DRAWN BY: B. LYON
CHECKED BY: S. SAWYER
SHEET 70 OF ??

ERECTION CALCS
(CRANE LIFT CHARTS)

APPROACH SLAB FORMWORK

D = 15"

$P_{max} = 1.25' (150\ lbs/ft^3) = 187.5\ lbs/ft^3$

PLYWOOD

SPACE SUPPORTS @ 24" O.C. MAX OK - REF SHT 2

2x4 STUDS

$P_{max} = 187.5\ lbs/ft^2 \times 2' = 375\ lbs/ft$

$M_{max} = \frac{wL^2}{8} = \frac{375\ \frac{lbs}{ft}(1.25')^2}{8} = 73\ lb.ft$

$V_{max} = \frac{wL}{2} = \frac{375\ lbs/ft(1.25')}{2} = 234\ lbs$

$P_{max} = 375\ lbs/ft \times 1.25' = 469\ lbs$ (POSTS)

OK REF SHEET 3

CONSTRUCTION LEADERS

PLYWOOD CHECK

DATE 5/2/2015

SHEET 1 OF 1

INITIAL EH

Plywood Design:

Number of Spans = 3 or more

Dead Load Pressure =	187.5	lb/ft^2
Live Load Pressure =	0	lb/ft^2
Pressure Applied =	187.5	lb/ft^2
Joist Spacing =	24	in.
Support Width =	1.5	in.
l_s =	22.5	in.
l_d =	22.75	in.
L/270	0.089	in.

Sheathing Section Properties:

Type: Plyform

Thickne 3/4

Face Grain Direct Across Supports

t =	0.75	in.
I =	0.199	in^4/ft.
KS =	0.455	in^3/ft.
Ib/Q =	7.187	in^2/ft.
F_b =	1,930	lb/in^2
F_v =	72	lb/in^2
E =	1,650,000	lb/in^2
E_e =	1,500,000	lb/in^2
C =	120	

	Maximum Center to Center Spacing of Supports				
Design Pressure p (lb/ft^2)	Based on Bending Stress L (in.)	Based on Bending Deflection L (in.)	Based on Rolling Shear L (in.)	Based on Shear Deflection L (in.)	Limiting Span L (in.)
100	32.46	27.96	104.99	209.51	27.96
200	22.95	23.71	53.25	105.50	22.95
300	18.74	21.54	36.00	70.84	18.74
400	16.23	20.13	27.37	53.50	16.23
500	14.52	19.11	22.20	43.10	14.52
600	13.25	18.31	18.75	36.17	13.25
700	12.27	17.67	16.28	31.22	12.27
800	11.48	17.13	14.44	27.50	11.48
900	10.82	16.67	13.00	24.61	10.82
1000	10.27	16.27	11.85	22.30	10.27
187.5	23.71	24.07	56.70	112.44	23.71

Use 24" (MAX)
MAX PRESSURE ONLY AT VERY BOTTOM

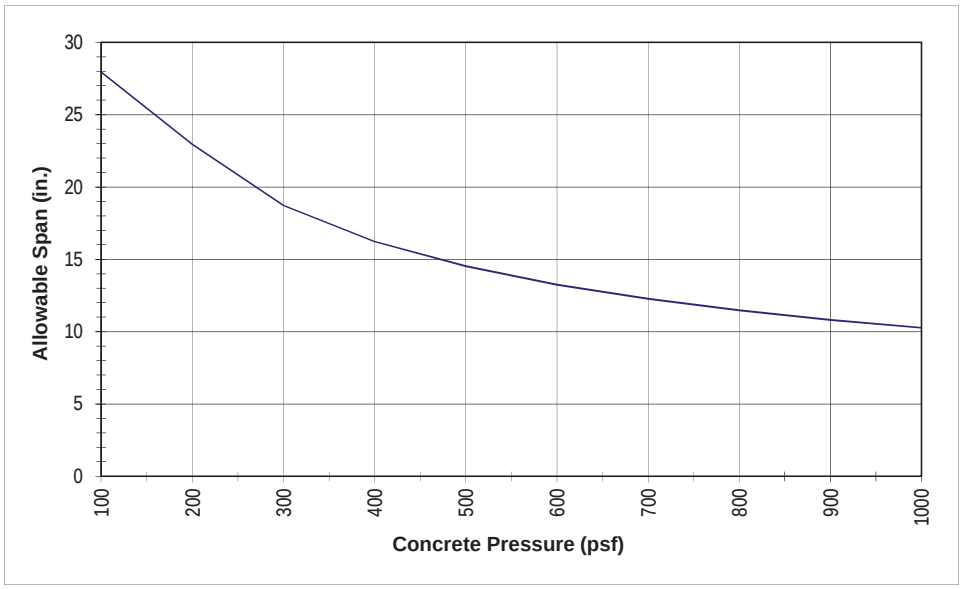

2X4 CHECK

TIMBER BEAM-COLUMN DESIGN
ASD NDS 2001

ENGINEER: EWH DATE 5/2/15

CHK BY: DATE

LOADS

R =	234	Lb
V =	234	Lb
Mx =	73	Ft - Lb
My =		Ft - Lb
P =	469	Lb
Δ =	0.00	in.

DESIGN PARAMETERS

Le =	1.25	ft
Lb =	3.5	in
BRG LOCATION =	END	
BRG FACE =	WIDTH bx	
Lx =	1.25	ft
Kx =	1.0	
Ly =	1.25	ft
Ky =	1.0	
BRACED WEAK AXIS =	No	

MEMBER DIMENSIONS

bx =	1.5	in
dy =	3.5	in
NOTCH =	0	in
FULLY BRACED =	No	
CANTILEVER =	No	

PROPERTIES

Species : Southern Pine

F_b =	1500	psi
F_V =	175	psi
Fc =	1650	psi
Fc perp =	565	psi
E =	1500000	psi

ADJUSTMENT FACTORS NDS 4.3

C_D =	1.25	C_i =	1.00
C_M =	1.00	C_r =	1.15
C_t =	1.00	C_f =	1.00
C_F =	1.00	C_T =	1.00
C_{fu} =	1.00		

Area =	5.25	in^2
I_x =	5.359	in^4
I_y =	0.984	in^4
S_x =	3.063	in^3
S_y =	1.313	in^3
E' =	1500000	psi

K_{be} =	0.439
KcE =	0.3
c =	0.8

BEAM AND COLUMN DESIGN

STRONG AXIS BENDING NDS SEC. 3.3

$F_b' = F_b*C_D*C_M*C_t*C_F*C_L*C_i*C_r*C_f$ (TABLE 4.3.1)

Lb/dy = 4.28571

APPROX. le = 30.9 in (for uniform loads) **(TABLE 3.3.3)**

R_B = 6.93301 (NDS eq. 3.3-5)

Fb* = 2156.25 psi

F_{bE} = 13699.7 psi

C_L = 0.85 (NDS eq. 3.3-6)

			CHECK	% OF CAPACITY
f_{bx} =	286.04	psi	OK	15.54%
F'_{bx} =	1840.74	psi		

WEAK AXIS (FLAT USE) BENDING NDS SEC. 3.3

$F_b' = F_b*C_D*C_M*C_t*C_F*C_L*C_{fu}*C_i*C_r*C_f$ (TABLE 4.3.1)

			CHECK	% OF CAPACITY
f_{by} =	0.00	psi	OK	0.00%
F'_{by} =	2156.25	psi		

SHEAR NDS SEC. 3.4

$F_v' = F_v*C_D*C_M*C_t*C_i$ (TABLE 4.3.1)

NDS 3.2.3.2 - Allowable notch = 1/4 * d = **0.88**

d_n * = **3.5** in

			CHECK	% OF CAPACITY
f_v =	66.86	psi	OK	30.56%
F_V ' =	218.75	psi		

ALLOWABLE V FOR NOTCH TENSION FACE 3.4.3.2 = **766** Lb. (NDS eq. 3.4-3)

COMPRESSION NDS SEC. 3.7

$Fc' = F_c*C_D*C_M*C_t*C_F*C_i*C_P$ (TABLE 4.3.1)

le_1 = **15** in le_1/d_1 = **4.29** **O.K.! NDS SEC. 3.7.1.4**

le_2 = **15.00** in le_2/d_2 = **10.00** **O.K.! NDS SEC. 3.7.1.4**

Fc* = **2062.50** psi C_{P1} = **0.98**

Fc_{E1} = $KcE*E/(le_1/d_1)^2$ = **24500.00** psi C_{P2} = **0.88** **CONTROLS**

Fc_{E2} = $KcE*E/(le_2/d_2)^2$ = **4500.00** psi

Fc_{E1} / Fc* = **11.88**

Fc_{E2} / Fc* = **2.18**

			CHECK	% OF CAPACITY
fc =	89.33	psi	OK	4.92%
Fc' =	1816.56	psi		

COMPRESSION PERPENDICULAR TO GRAIN NDS SEC. 3.7

Fc' (perp)= $F_{c(perp)}*C_M*C_t*C_i*C_b$ (TABLE 4.3.1)

Area = 5.25 in^2

x = 1.5 in

Lb = 3.5 in

Cb = 1.11 **NDS SEC. 3.10.4**

			CHECK	% OF CAPACITY
fc (perp) =	44.57	psi	OK	7.89%
Fc' (perp)=	565.00	psi		

INTERACTION EQUATION NDS SEC 3.9

$f_c < Fc_{E1}$ = **OK FOR EITHER UNAXIAL OR BIAXIAL BENDING**

$f_c < Fc_{E2}$ = **OK FOR EITHER UNAXIAL OR BIAXIAL BENDING**

$f_{b1} < F_{bE}$ = **OK FOR BIAXIAL BENDING**

$$\left[\frac{f_c}{F_c'}\right]^2 + \frac{f_{b1}}{F_{b1}'\left[1-\left(\frac{f_c}{F_{cE1}}\right)\right]} + \frac{f_{b2}}{F_{b2}'\left[1-\left(\frac{f_c}{F_{cE2}}\right)-\left(\frac{f_{b1}}{F_{bE}}\right)^2\right]} = 0.16 \quad \text{OK}$$

DEFLECTION

Δ = **L/ #DIV/0!**

L/120 =	0.13	O.K.!
L/270 =	0.06	O.K.!
L/360 =	0.04	O.K.!

CRANE LIFT STUDY ANALYSIS - SHORT FORM

Project: **Hartford Lateral Slide** **Name:** **Erich Heymann**

Date/Time: **5/1/2015**

Crane Configuration

Model/Serial # **Link-Belt LS-248H II** Boom Length/Type: **120**

Maximum Capacity **200** TN Jib Length/Type: **N/A**

Anti-two block device: Yes **X** No ____ Barge/Crane List: **0**

Ground Conditions: Nature of Soil (Soil Type) Crane Mats

Are the uses of crane mats, or compacted fill required? Yes **X** No ____

Calculations

Load Description: **Approach Slabs** Load Weight: **85,928** LBS

Rigging:

60 Ton Main Block = **1650** LBS

15 Ton Ball = **1215** LBS

Main Line = **1036** LBS * Assumed 4-part

Whip Line = **50** LBS

Other Rigging: (2) 26 Ton Slings = **150** LBS

50 Ton Spreader = **1400** LBS

(4) 14 Ton Slings = **125** LBS

(2) 25 Ton Spreaders **1000** LBS

(4) 12 Ton Slings = **50** LBS

Shackles & Misc. = **400** LBS

Total Rigging: = **7076** LBS

Load Weight + Rigging = **93,004 LBS** **CSX FACTOR X 1.5** ____ **lbs**

Maximum Crane Radius = **35'**, Associated Boom Angle = ____

Unfactored Load **80.9%** of Chart **Factored CSX load** ____ of Chart

Final Checks Prior to Start

- ☐ Verify Gross Weight and Load Chart Capacities, (De-rated if Crane on Barge)
- ☐ Inspected Crane and Verified Components (Daily Logs and Annual Certification Checked)
- ☐ Inspected Rigging for Condition and Size
- ☐ Ground Stability. Outrigger pads/blocking sized correctly? Barge/Crane List, (Derated Chart?)
- ☐ Distance to Nearest Utility ____ (above and below ground)
- ☐ Weather and wind load considerations, checked and verified at time of lift.
- ☐ Pre-Lift Meeting and Rigging Crew, Operator, and Signal Person (Attach sign-in sheet)
- ☐ Rigging Drawings Attached
- ☐ Method of Communication, (radios, hand signals etc.) checked & verified
- ☐ Lift Abort Procedures, checked and verified. JHA/PSI conducted

Responsible Personnel (Print Name & Sign)

Level 1 or 2 Lift Specialist: ____

Superintendent: ____

Operator: ____

CRANE LIFT STUDY ANALYSIS - SHORT FORM

Project: **Hartford Lateral Slide** **Name:** **Erich Heymann**

Date/Time: **5/1/2015**

Crane Configuration

Model/Serial # **Link-Belt 298 HSL** Boom Length/Type: **140**

Maximum Capacity **250** TN Jib Length/Type: **N/A**

Anti-two block device: Yes **X** No ____ Barge/Crane List: **0**

Ground Conditions: Nature of Soil (Soil Type) Crane Mats

Are the uses of crane mats, or compacted fill required? Yes **X** No ____

Calculations

Load Description: **Approach Slabs** Load Weight: **85,928** LBS

Rigging:

165 Ton Main Block = **3392** LBS

20 Ton Ball = **1255** LBS

Main Line = **2072** LBS * Assumed 8-part

Whip Line = **50** LBS

Other Rigging: (2) 26 Ton Slings = **150** LBS

50 Ton Spreader = **1400** LBS

(4) 14 Ton Slings = **125** LBS

(2) 25 Ton Spreaders **1000** LBS

(4) 12 Ton Slings = **50** LBS

Shackles & Misc. = **400** LBS

Total Rigging: = **9894** LBS

Load Weight + Rigging = **95,822 LBS** **CSX FACTOR X 1.5** ____ **lbs**

Maximum Crane Radius = **49'**, Associated Boom Angle = ____

Unfactored Load **79.8%** of Chart **Factored CSX load** ____ of Chart

Final Checks Prior to Start

- ☐ Verify Gross Weight and Load Chart Capacities, (De-rated if Crane on Barge)
- ☐ Inspected Crane and Verified Components (Daily Logs and Annual Certification Checked)
- ☐ Inspected Rigging for Condition and Size
- ☐ Ground Stability. Outrigger pads/blocking sized correctly? Barge/Crane List, (Derated Chart?)
- ☐ Distance to Nearest Utility ____ (above and below ground)
- ☐ Weather and wind load considerations, checked and verified at time of lift.
- ☐ Pre-Lift Meeting and Rigging Crew, Operator, and Signal Person (Attach sign-in sheet)
- ☐ Rigging Drawings Attached
- ☐ Method of Communication, (radios, hand signals etc.) checked & verified
- ☐ Lift Abort Procedures, checked and verified. JHA/PSI conducted

Responsible Personnel (Print Name & Sign)

Level 1 or 2 Lift Specialist: ____

Superintendent: ____

Operator: ____

298 HSL

Main Boom Capacities - 140 Ft Open Throat Tube Boom							
		Over End Blocked	360 Degree Rotation				
Load Radius (ft)	Boom Angle (deg)	ABCDE+A CURVE 1	ABCDE+A CURVE 2	ABCD+A CURVE 3	ABC+A CURVE 4	AB+A CURVE 5	Load Radius (ft)
23.94	82.0	277,800	277,800	277,800	269,700	243,000	23.94
25	81.6	274,300	274,300	269,600	257,500	225,500	25
30	79.5	228,800	228,800	215,600	191,500	167,400	30
35	77.4	190,300	190,300	171,000	151,700	132,400	35
40	75.3	160,800	157,300	141,200	125,100	109,000	40
41	**74.9**	**157,000**	**153,100**	**137,400**	**121,700**	**106,000**	**41**
42	**74.4**	**153,300**	**149,000**	**133,700**	**118,400**	**103,100**	**42**
43	**74.0**	**149,600**	**144,900**	**130,000**	**115,100**	**100,200**	**43**
44	**73.6**	**145,900**	**140,700**	**126,200**	**111,700**	**97,200**	**44**
45	**73.2**	**142,200**	**136,600**	**122,500**	**108,400**	**94,300**	**45**
46	**72.7**	**138,400**	**132,500**	**118,800**	**105,100**	**91,400**	**46**
47	**72.3**	**134,700**	**128,300**	**115,000**	**101,700**	**88,400**	**47**
48	**71.9**	**131,000**	**124,200**	**111,300**	**98,400**	**85,500**	**48**
49	**71.4**	**127,300**	**120,100**	**107,600**	**95,100**	**82,600**	**49**
50	71.0	123,600	116,000	103,900	91,800	79,700	50
51	**70.6**	**121,000**	**113,500**	**101,600**	**89,700**	**77,900**	**51**
52	**70.1**	**118,500**	**111,000**	**99,400**	**87,700**	**76,100**	**52**
53	**69.7**	**116,000**	**108,500**	**97,100**	**85,700**	**74,300**	**53**
54	**69.2**	**113,500**	**106,000**	**94,900**	**83,700**	**72,600**	**54**
55	**68.8**	**111,000**	**103,500**	**92,600**	**81,700**	**70,800**	**55**
56	**68.4**	**108,500**	**101,000**	**90,400**	**79,700**	**69,000**	**56**
57	**67.9**	**106,000**	**98,500**	**88,100**	**77,700**	**67,300**	**57**
58	**67.5**	**103,500**	**96,000**	**85,900**	**75,700**	**65,500**	**58**
59	**67.0**	**101,000**	**93,500**	**83,600**	**73,700**	**63,700**	**59**
60	66.6	98,500	91,100	81,400	71,700	62,000	60
70	62.1	82,700	74,400	66,400	58,300	50,200	70
80	57.3	69,700	62,500	55,600	48,700	41,800	80
90	52.3	59,800	53,600	47,500	41,500	35,400	90
100	47.0	52,000	46,600	41,200	35,800	30,400	100
110	41.1	46,900	41,000	36,200	31,300	26,400	110
120	34.4	41,100	36,400	32,000	27,600	23,200	120
130	26.3	36,200	32,500	28,500	24,400	20,400	130
136.02	20.0	33,400	30,500	26,600	22,800	18,900	136.02

298HSL
1' Increments between 40' and 60' Radii for 140' Boom
Link-Belt Construction Equipment Company

From P3P0029
6/5/2013
(sdw)

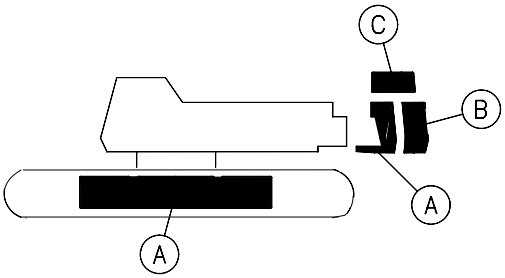

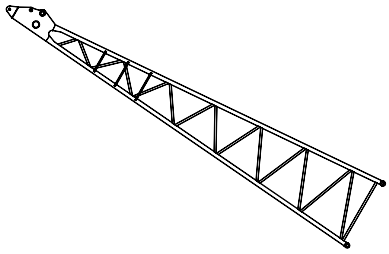

MAIN BOOM CAPACITIES - 120 FT OPEN THROAT TUBE BOOM

Load Radius (ft)	Boom Angle (deg)	360° Rotation					Over End Blocked	Load Radius (ft)
		ABC + A CTWT (lb)	ABC CTWT (lb)	AB CTWT (lb)	A CTWT (lb)	0 CTWT (lb)	ABC + A CTWT (lb)	
20.0	82.0	186,200	186,200	186,200	148,900	106,900	186,200	20.0
25	79.6	173,900	173,900	157,300	97,900	69,800	173,900	25
30	77.1	156,900	144,900	117,000	72,200	51,000	156,900	30
35	74.7	128,900	115,000	92,600	56,700	39,700	131,100	35
40	72.2	106,500	94,900	76,300	46,300	32,100	112,600	40
50	67.1	78,500	69,800	55,800	33,200	22,600	86,900	50
60	61.8	61,600	54,600	43,400	25,400	16,800	69,300	60
70	56.2	50,300	44,500	35,100	20,100	13,000	58,300	70
80	50.3	42,200	37,200	29,200	16,300	10,200	49,000	80
90	43.7	36,100	31,800	24,700	13,400	8,100	41,800	90
100	36.3	31,400	27,500	21,200	11,200	6,400	36,100	100
110	27.2	27,500	24,000	18,400	9,400	5,100	31,400	110
120	13.4	24,300	21,100	16,000	7,800	3,900	27,500	120

Note: Refer To Page 13 For "Capacity Deductions" Caused By Any Jib Attachment Or Tip Extension.

REFERENCE ONLY

ERECTION DRAWINGS

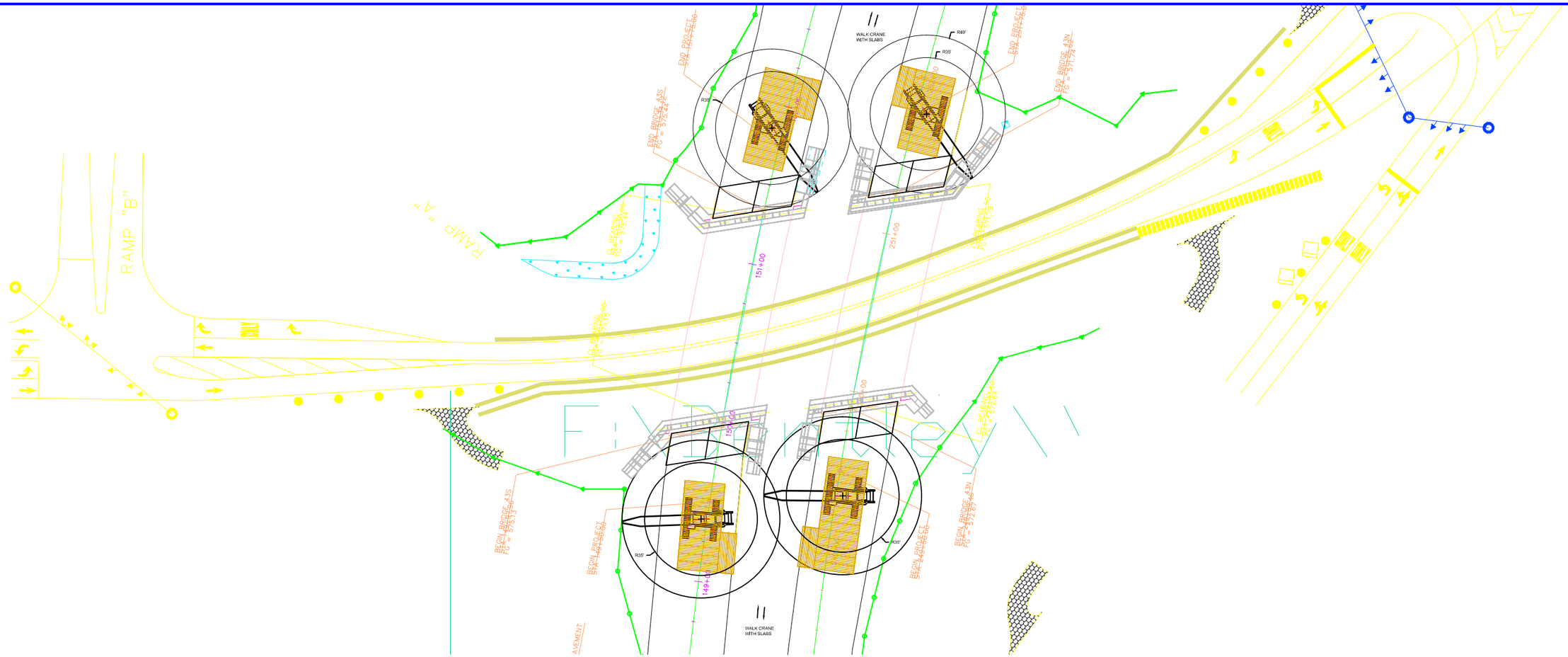

APPROACH SLABS

GENERAL NOTES

DRAWINGS SHALL NOT BE SCALED
ANY CHANGES TO THE PLAN SHALL BE APPROVED BY THE DESIGN ENGINEER & PROJECT MANAGEMENT
CONCRETE MUST ACHIEVE A STRENGTH OF 4250 PSI (85% OF DESIGN STRENGTH) PRIOR TO REMOVAL OF FORMS.
CONCRETE MUST ACHIEVE 28 DAY DESIGN STRENGTH (5000 PSI) PRIOR TO BEING MOVED.

DESIGN AIDS

-ASD NINTH ED. (STEEL)
-AASHTO GUIDE DESIGN SPECIFICATIONS FOR BRIDGE TEMPORARY WORKS

MATERIAL PROPERTIES

CONCRETE
- HPC CLASS A (5 KSI)

REINFORCING STEEL
- ALL APPROACH SLAB REINFORCING STEEL SHALL BE LEVEL II OR HIGHER.

HPC RAPID SET
- TBD

FINISH

TOP SURFACE OF APPROACH SLABS TO RECEIVE A "TINED" FINISH.

CURING

CURING WILL TAKE PLACE IMMEDIATELY UPON COMPLETION OF FINISHING OF THE TOP SURFACE.

THE APPROACH SLABS WILL BE WETTED AND COVERED WITH VISQUEEN/BURLAP FOR A MINIMUM OF 7 DAYS.

LIST OF DRAWINGS

1. TITLE
2. ERECTION PLANS (ABUT 1 & 3)
3. ERECTION PLANS (ABUT 2 & 4)
4. LEVELING PAD & FORMWORK
5. ABUTMENTS 1 & 2 DETAILS
6. ABUTMENTS 3 & 4 DETAILS
7. RIGGING
8. LIFTING LUG DETAILS

Revision No. & Date	Vermont Agency of Transportation			Drawing Status		Name	Date	PCL Civil Constructors, Inc. 3810 Northdale Blvd. Suite 200, Tampa Florida 33624 (813)-264-9500 ; Fax: (813)-264-6689	
				May 7 2015 8:39 AM	Drawn By	EWH	04/13/2015		
	Road No.	County / City	Financial Project ID No.	FOR CONSTRUCTION	Design By	EWH	04/13/2015	Submittal APPROACH SLABS	PCL Project / Job No. I-91 Hartford / 5514001
	I-91	Hartford	IM 091-2(79)		Check By	TMD	05/05/2015	Drawing Title TITLE PAGE	Sheet No. 1

STATE OF VERMONT TIMOTHY DAVIS NO. 97183 CIVIL LICENSED PROFESSIONAL ENGINEER

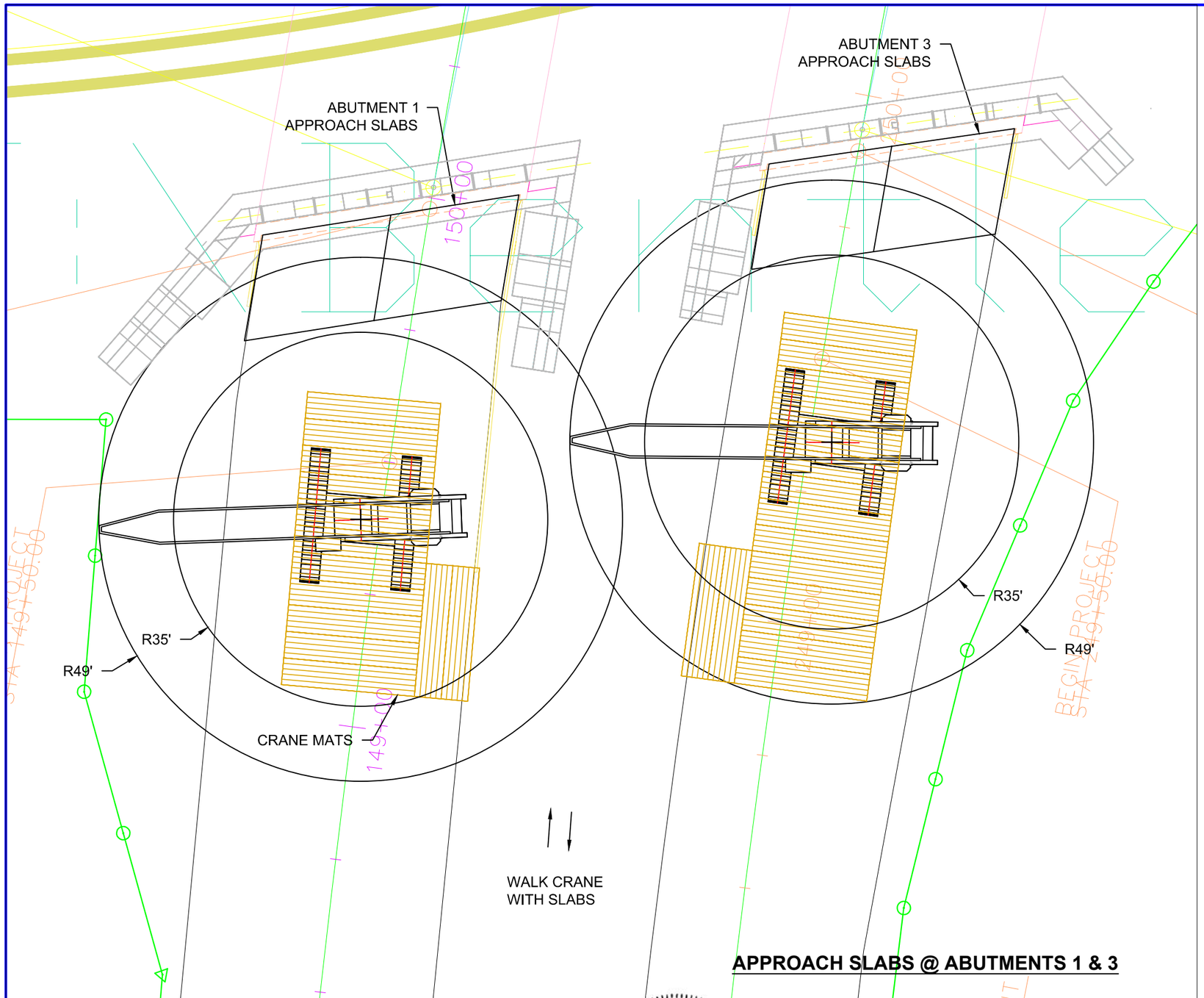

APPROACH SLABS @ ABUTMENTS 1 & 3

CRANE INFO:		LINK-BELT 298 HSL
BOOM LENGTH:	FT	140'
PANEL WEIGHT:	LBS	85928
PICK WEIGHT + RIGGING:	LBS	95822
MAX. CRANE RADIUS:	FT	49
CRANE CAPACITY:	LBS	120,100
% OF CHART:		80%

CRANE INFO:		LINK-BELT LS-248H II
BOOM LENGTH:	FT	120'
PANEL WEIGHT:	LBS	85928
PICK WEIGHT + RIGGING:	LBS	93004
MAX. CRANE RADIUS:	FT	35
CRANE CAPACITY:	LBS	115,000
% OF CHART:		81%

PROCEDURE

1. SET UP CRANE MATS ON I-91.
2. RIG TO APPROACH SLABS PER DETAILS ON SHEET 4
3. WALK CRANE WITH APPROACH SLABS
4. SET APPROACH SLABS IN POSITION

GENERAL NOTES

1. CRANE LOCATION & LOCATION OF WALKWAYS ARE APPROXIMATE, ACTUAL LOCATION WILL VARY.

Revision No. & Date	Vermont Agency of Transportation			Drawing Status		Name	Date	PCL Civil Constructors, Inc. 3810 Northdale Blvd. Suite 200, Tampa Florida 33624 (813)-264-9500 ; Fax: (813)-264-6689	
				May 7 2015 8:39 AM	Drawn By	EWH	04/13/2015		
	Road No.	County / City	Financial Project ID No.	FOR CONSTRUCTION	Design By	EWH	04/13/2015	Submittal APPROACH SLABS	PCL Project / Job No. I-91 Hartford / 5514001
	I-91	Hartford	IM 091-2(79)		Check By	TMD	05/05/2015	Drawing Title ERECTION PLANS (ABUT 1 & 3)	Sheet No. 2

STATE OF VERMONT
Professional Seal
TIMOTHY DAVIS
NO. 97183
CIVIL
LICENSED
PROFESSIONAL ENGINEER

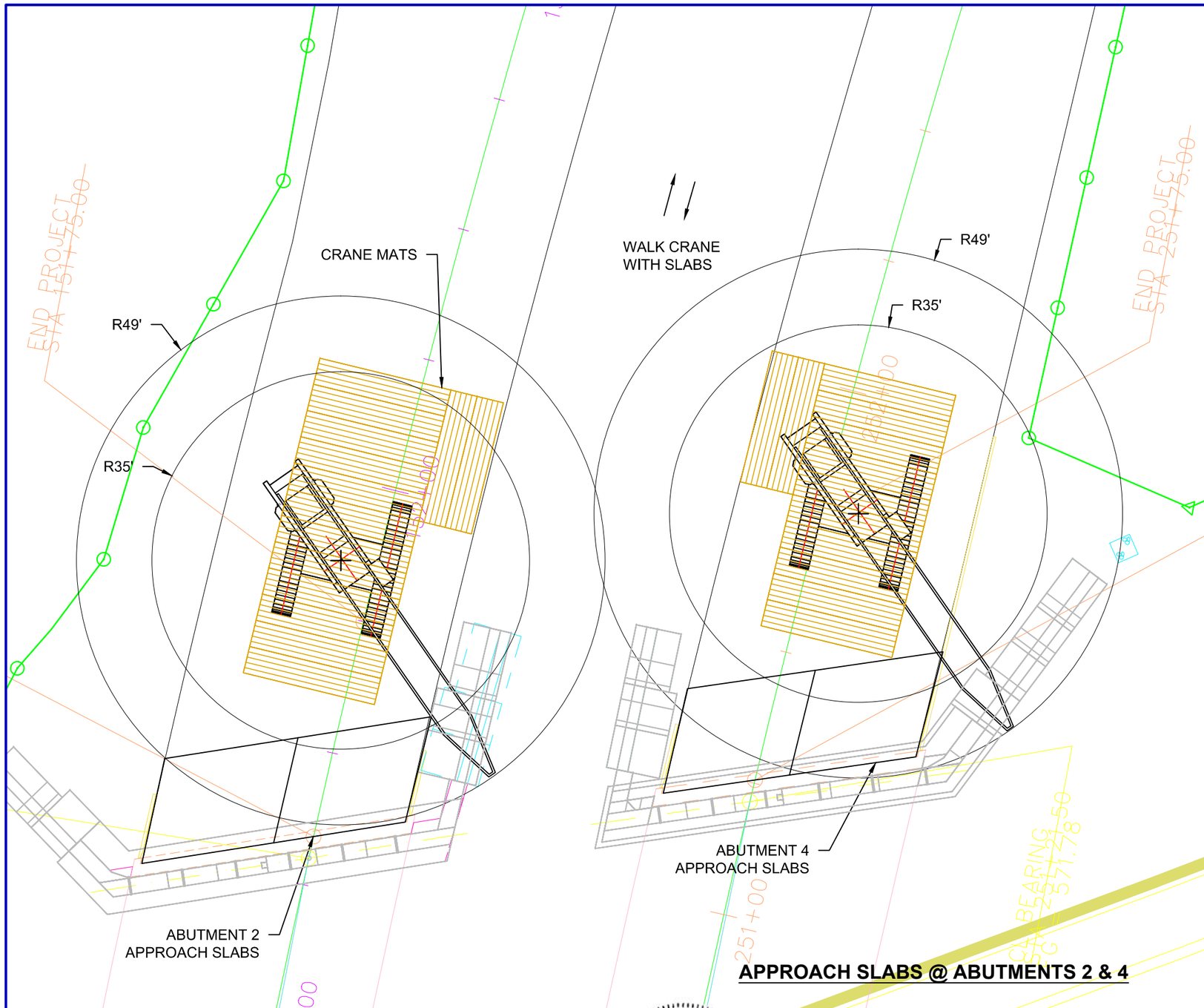

APPROACH SLABS @ ABUTMENTS 2 & 4

CRANE INFO:		LINK-BELT 298 HSL
BOOM LENGTH:	FT	140'
PANEL WEIGHT:	LBS	85928
PICK WEIGHT + RIGGING:	LBS	95822
MAX. CRANE RADIUS:	FT	49
CRANE CAPACITY:	LBS	120,100
% OF CHART:		80%

CRANE INFO:		LINK-BELT LS-248H II
BOOM LENGTH:	FT	120'
PANEL WEIGHT:	LBS	85928
PICK WEIGHT + RIGGING:	LBS	93004
MAX. CRANE RADIUS:	FT	35
CRANE CAPACITY:	LBS	115,000
% OF CHART:		81%

PROCEDURE

1. SET UP CRANE MATS ON I-91.
2. RIG TO APPROACH SLABS PER DETAILS ON SHEET 4
3. WALK CRANE WITH APPROACH SLABS
4. SET APPROACH SLABS IN POSITION

GENERAL NOTES

1. CRANE LOCATION & LOCATION OF WALKWAYS ARE APPROXIMATE, ACTUAL LOCATION WILL VARY.

Revision No. & Date	Vermont Agency of Transportation			Drawing Status		Name	Date	PCL Civil Constructors, Inc. 3810 Northdale Blvd. Suite 200, Tampa Florida 33624 (813)-264-9500 ; Fax: (813)-264-6689	
				May 7 2015 8:39 AM	Drawn By	EWH	04/13/2015		
	Road No.	County / City	Financial Project ID No.	FOR CONSTRUCTION	Design By	EWH	04/13/2015	Submittal APPROACH SLABS	PCL Project / Job No. I-91 Hartford / 5514001
	I-91	Hartford	IM 091-2(79)		Check By	TMD	05/05/2015	Drawing Title ERECTION PLANS (ABUT 2 & 4)	Sheet No. 3

STATE OF VERMONT
TIMOTHY DAVIS
NO. 97183
CIVIL
LICENSED
PROFESSIONAL ENGINEER

N:\Hartford Lateral Slab\Job Shared\Engineering\Erection Plans\Approach Slab Erection Planning 5/7/2015 8:09 AM

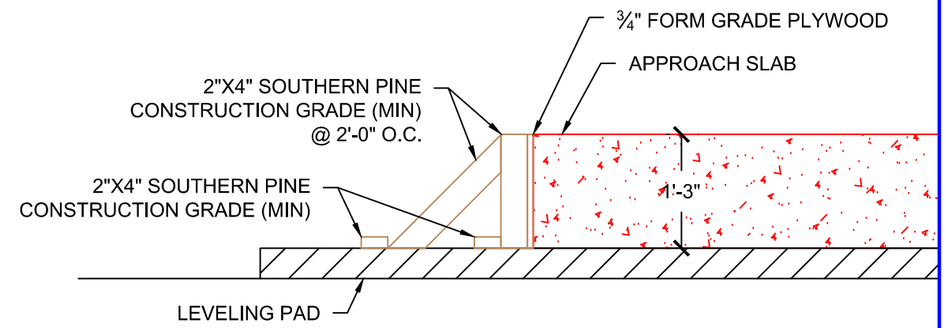

DETAIL A

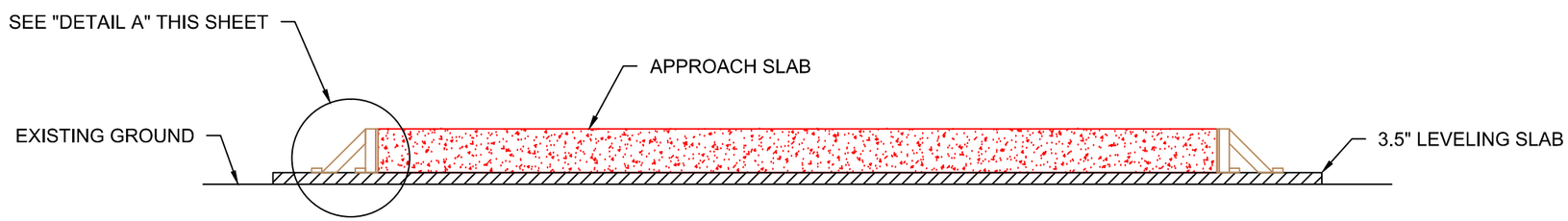

APPROACH SLAB LEVELING PAD & FORMWORK

Revision No. & Date	Vermont Agency of Transportation				Drawing Status		Name	Date	PCL Civil Constructors, Inc. 3810 Northdale Blvd. Suite 200, Tampa Florida 33624 (813)-264-9500 ; Fax: (813)-264-6689	
				STATE OF VERMONT TIMOTHY DAVIS NO. 97183 CIVIL LICENSED PROFESSIONAL ENGINEER	May 7 2015 8:39 AM FOR CONSTRUCTION	Drawn By	EWH	04/13/2015		
	Road No.	County / City	Financial Project ID No.			Design By	EWH	04/13/2015	Submittal APPROACH SLABS	PCL Project / Job No. I-91 Hartford / 5514001
	I-91	Hartford	IM 091-2(79)			Check By	TMD	05/05/2015	Drawing Title LEVELING PAD & FORMWORK	Sheet No. 4

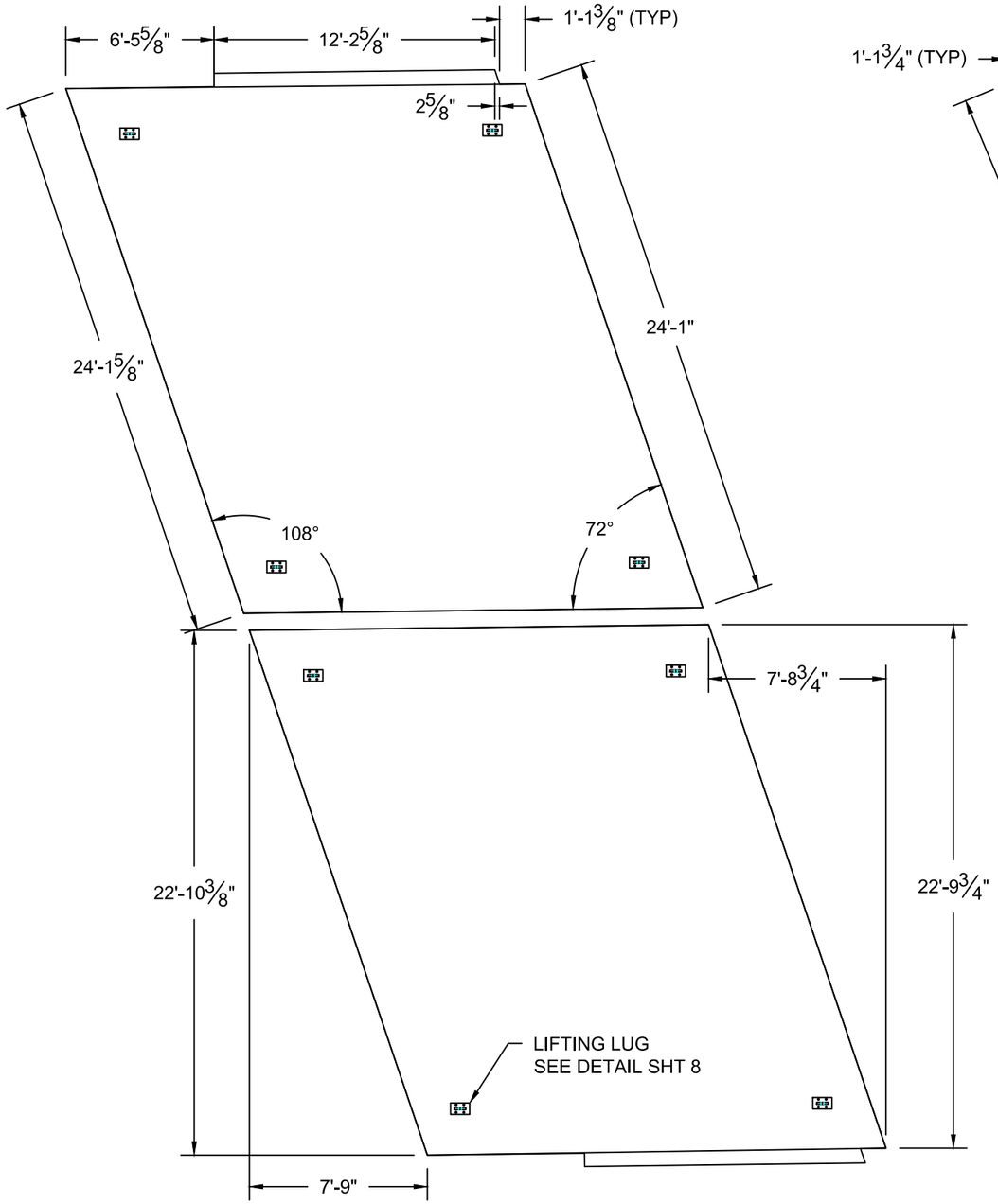

ABUTMENT 1 APPROACH SLABS

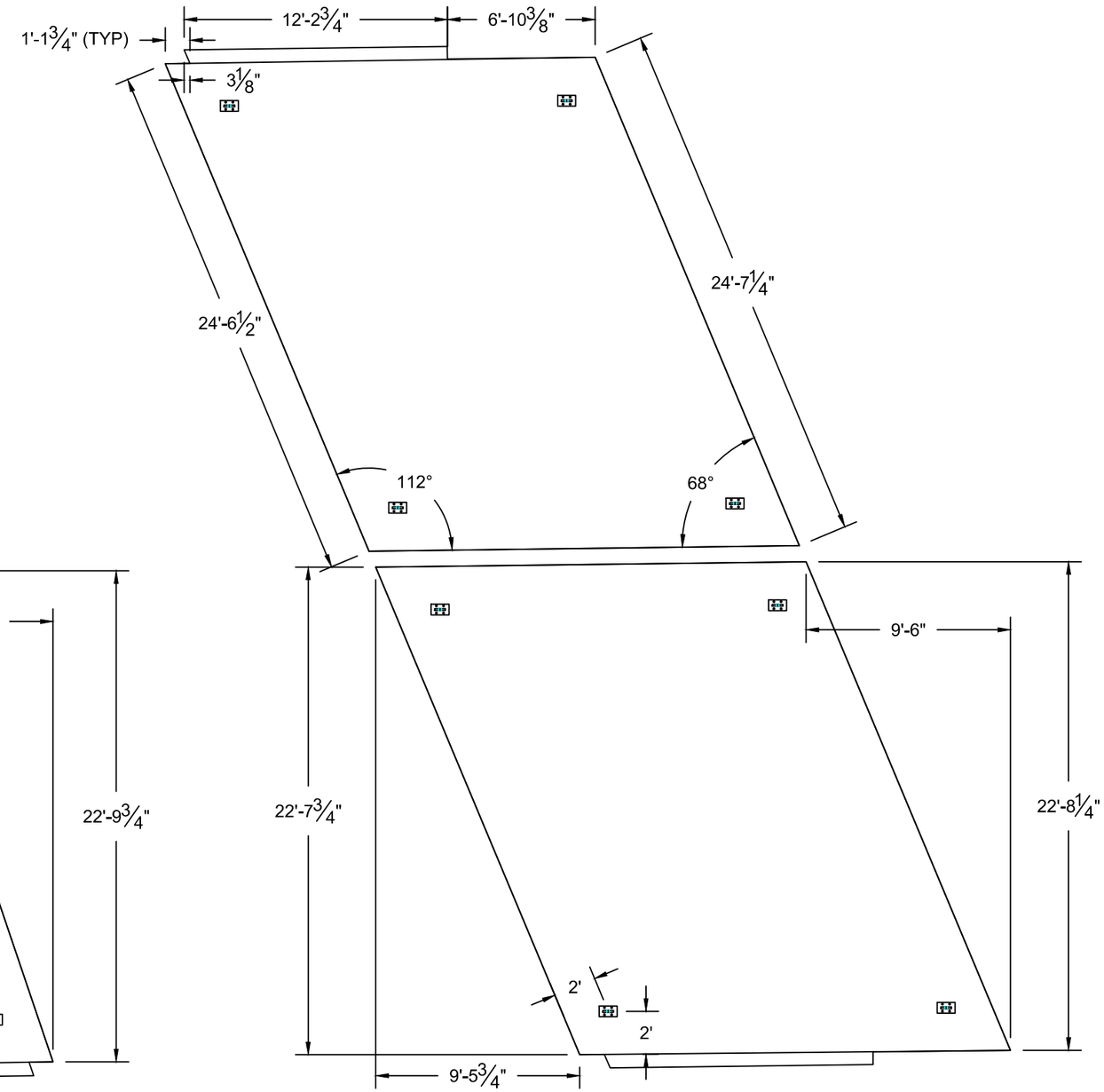

ABUTMENT 2 APPROACH SLABS

Revision No. & Date	Vermont Agency of Transportation			Drawing Status		Name	Date	PCL Civil Constructors, Inc. 3810 Northdale Blvd. Suite 200, Tampa Florida 33624 (813)-264-9500 ; Fax: (813)-264-6689	
				May 7 2015 8:40 AM	Drawn By	EWH	04/13/2015		
	Road No.	County / City	Financial Project ID No.	FOR CONSTRUCTION	Design By	EWH	04/13/2015	Submittal APPROACH SLABS	PCL Project / Job No. I-91 Hartford / 5514001
	I-91	Hartford	IM 091-2(79)		Check By	TMD	05/05/2015	Drawing Title APPROACH SLABS 1 & 2	Sheet No. 5

STATE OF VERMONT
TIMOTHY DAVIS
NO. 97183
CIVIL
LICENSED
PROFESSIONAL ENGINEER

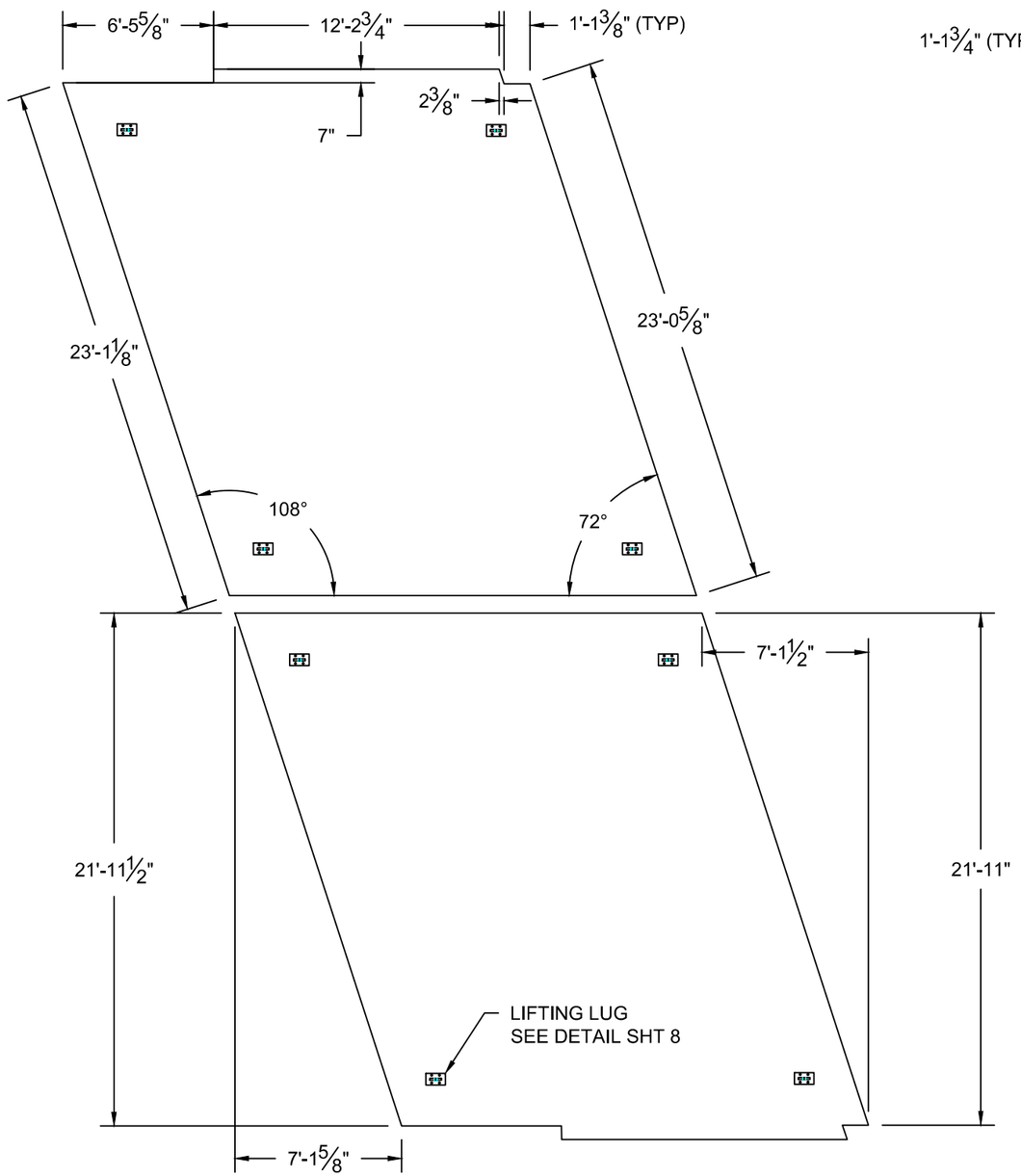

ABUTMENT 3 APPROACH SLABS

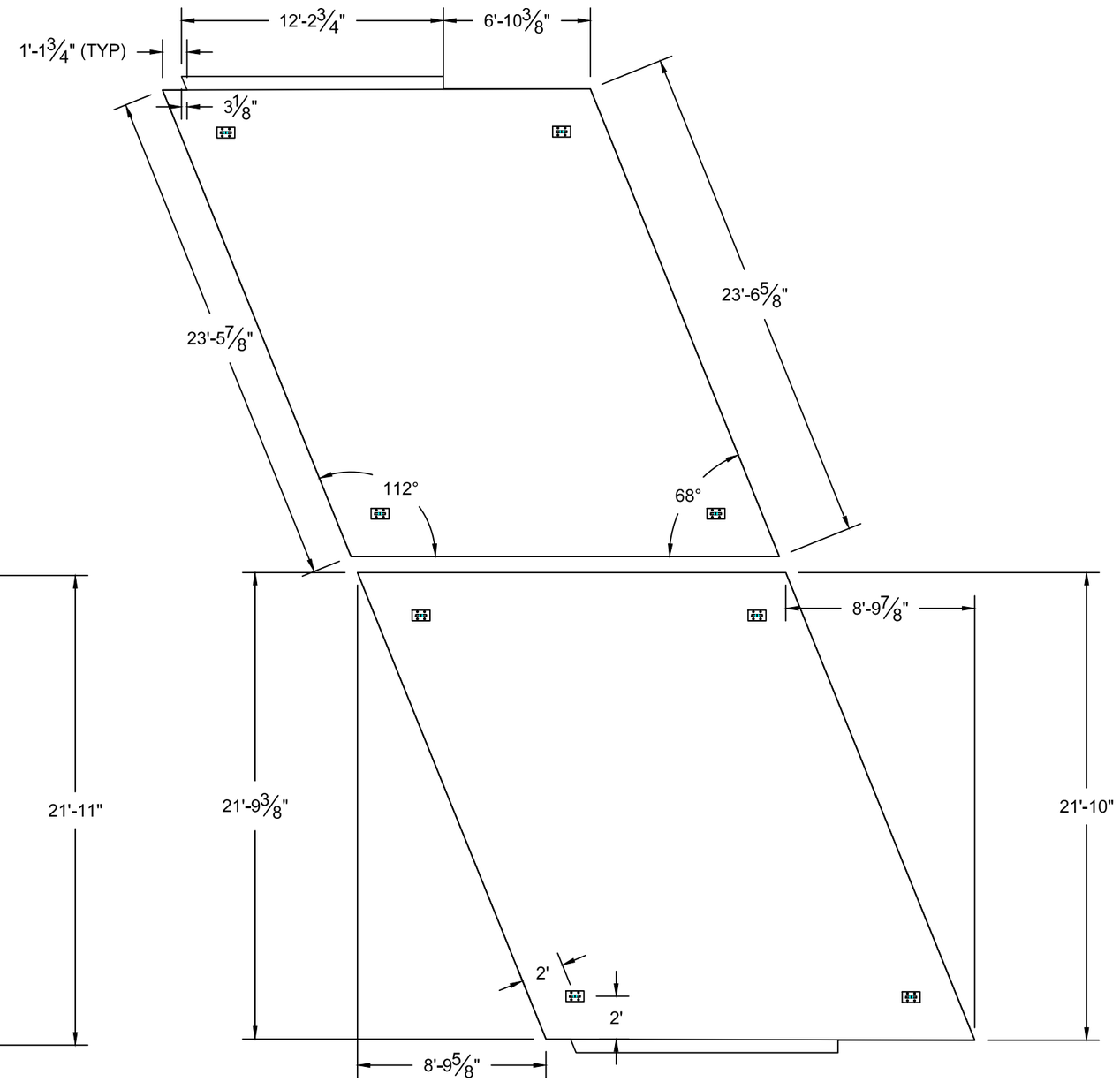

ABUTMENT 4 APPROACH SLABS

Revision No. & Date	Vermont Agency of Transportation			Drawing Status		Name	Date	PCL Civil Constructors, Inc. 3810 Northdale Blvd. Suite 200, Tampa Florida 33624 (813)-264-9500 ; Fax: (813)-264-6689	
				May 7 2015 8:40 AM FOR CONSTRUCTION	Drawn By	EWH	04/13/2015		
	Road No.	County / City	Financial Project ID No.		Design By	EWH	04/13/2015	Submittal APPROACH SLABS	PCL Project / Job No. I-91 Hartford / 5514001
	I-91	Hartford	IM 091-2(79)		Check By	TMD	05/05/2015	Drawing Title APPROACH SLABS 3 & 4	Sheet No. 6

STATE OF VERMONT
Timothy Davis
NO. 97183
CIVIL
LICENSED
PROFESSIONAL ENGINEER

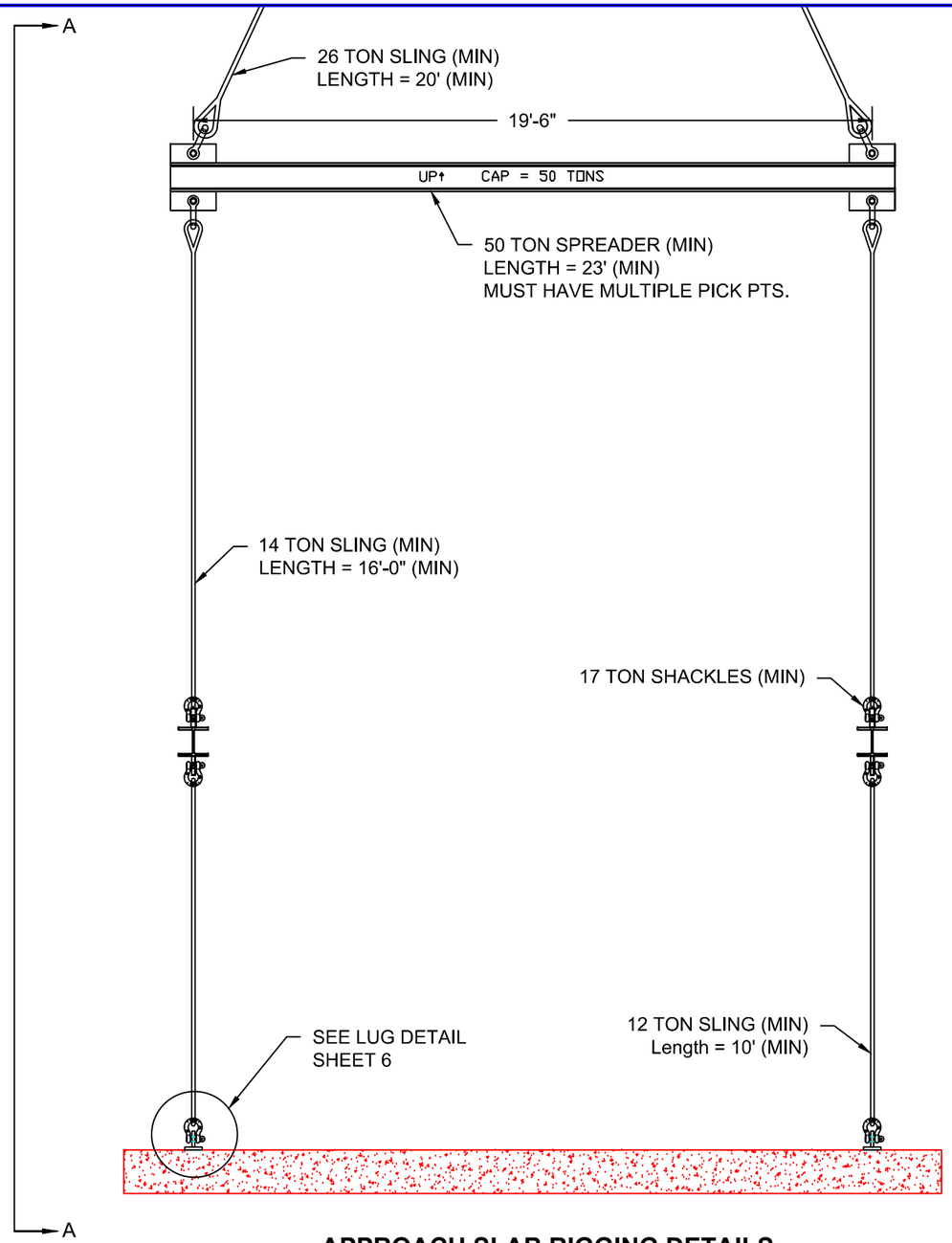

APPROACH SLAB RIGGING DETAILS

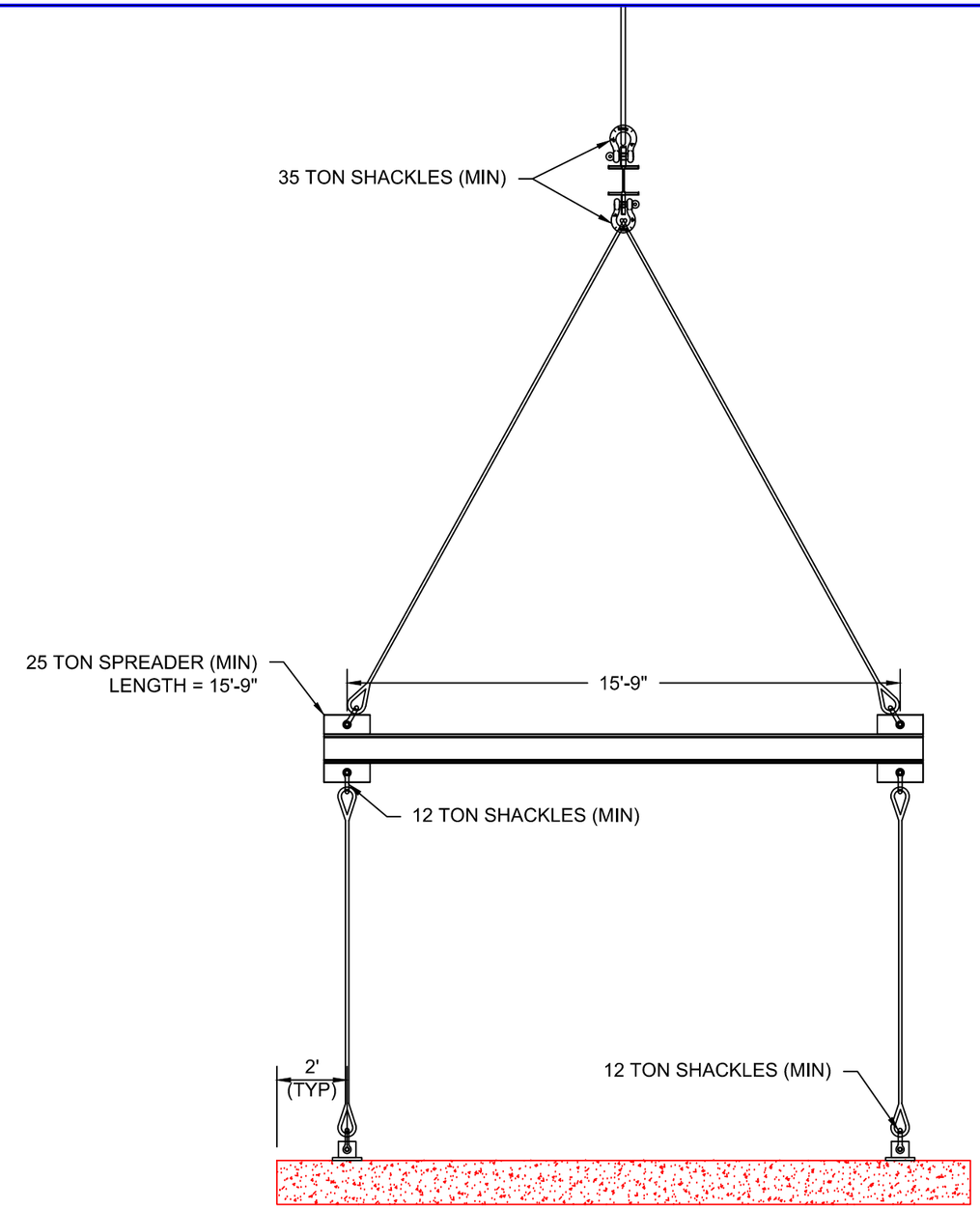

SECTION A-A

Revision No. & Date	Vermont Agency of Transportation			Drawing Status		Name	Date	PCL Civil Constructors, Inc. 3810 Northdale Blvd. Suite 200, Tampa Florida 33624 (813)-264-9500 ; Fax: (813)-264-6689	
				May 7 2015 8:40 AM FOR CONSTRUCTION	Drawn By	EWH	04/13/2015		
	Road No.	County / City	Financial Project ID No.		Design By	EWH	04/13/2015	Submittal APPROACH SLABS	PCL Project / Job No. I-91 Hartford / 5514001
	I-91	Hartford	IM 091-2(79)		Check By	TMD	05/05/2015	Drawing Title RIGGING DETAILS	Sheet No. 7

STATE OF VERMONT
TIMOTHY DAVIS
NO. 97183
CIVIL
LICENSED
PROFESSIONAL ENGINEER

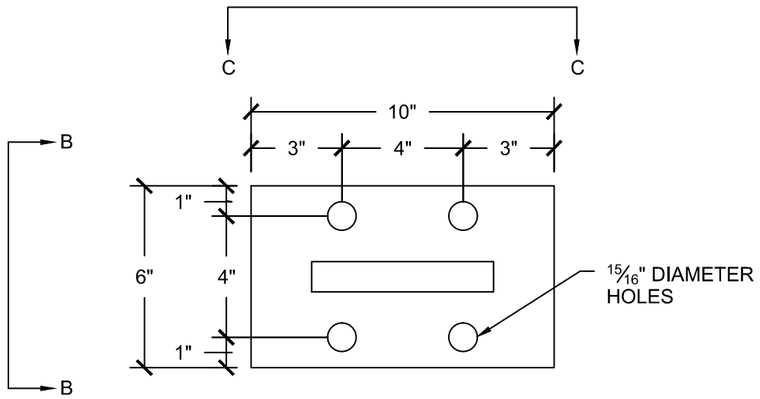

LUG PLAN

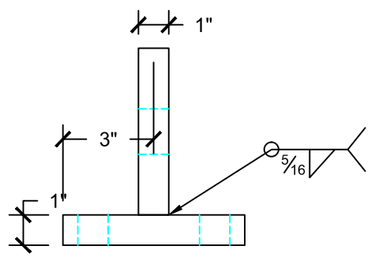

SECTION B-B

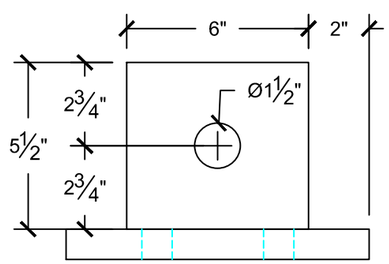

SECTION C-C

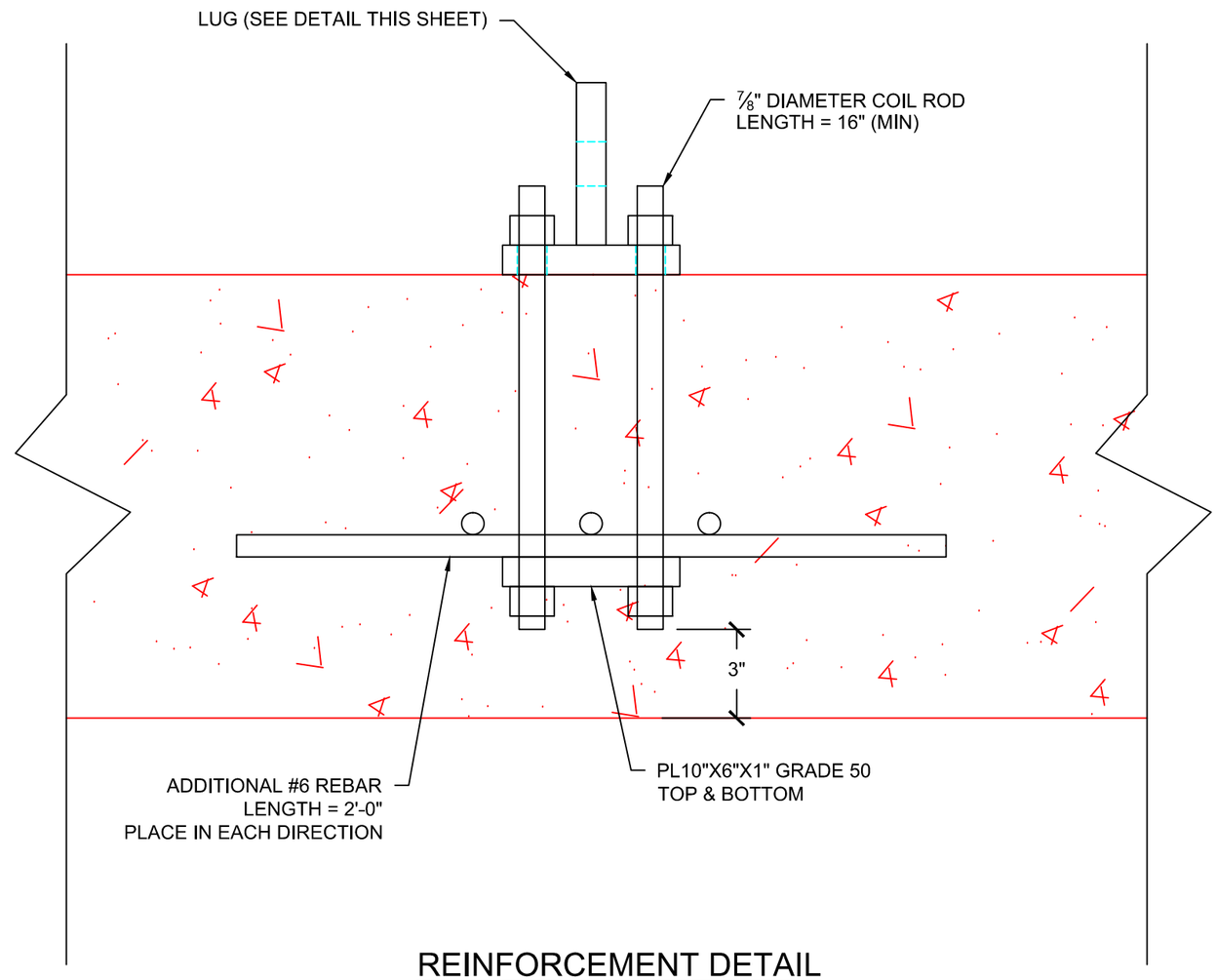

REINFORCEMENT DETAIL

Revision No. & Date	Vermont Agency of Transportation			Drawing Status		Name	Date	PCL Civil Constructors, Inc. 3810 Northdale Blvd. Suite 200, Tampa Florida 33624 (813)-264-9500 ; Fax: (813)-264-6689	
				May 7 2015 8:40 AM FOR CONSTRUCTION	Drawn By	EWH	04/13/2015		
	Road No.	County / City	Financial Project ID No.		Design By	EWH	04/13/2015	Submittal APPROACH SLABS	PCL Project / Job No. I-91 Hartford / 5514001
	I-91	Hartford	IM 091-2(79)		Check By	TMD	05/05/2015	Drawing Title LIFTING LUG DETAILS	Sheet No. 8

STATE OF VERMONT TIMOTHY DAVIS NO. 97183 CIVIL LICENSED PROFESSIONAL ENGINEER

QUALITY CONTROL PROCESSES

Approach Slab Quality Control Processes

1. Concrete Production

Prior to pouring of the permanent concrete for the approach slabs, concrete leveling slabs will be poured as bases. The approach slabs will be poured on top of the leveling slabs to ensure a flat base surface.

Concrete will be supplied by Carroll Concrete. The approved mix design is included for reference. Concrete will be inspected at the plant and again when it arrives on site to ensure that it meets all requirements of the specifications.

2. Formwork

Prior to pouring concrete all formwork will be inspected to ensure that it is installed per plan. Drawings and calculations are included for reference.

Formwork will be thoroughly cleaned and free of extraneous material such as dirt, loose chips, and dust from concrete surface. If compressed air is used, it will be free of oil.

Note: Prior to removal of forms the concrete must achieve 85% of design strength (4,250 PSI)

3. Reinforcing Steel

Prior to pouring concrete all reinforcing steel will be inspected to ensure that it is installed per the approved drawings.

All reinforcing steel will be clean from foreign material.

Note: All approach slab reinforcing steel shall be Level II or higher.

4. Concrete Finishing

The top surface of the approach slabs are to receive a “tined” finish.

5. Concrete Curing

Curing will take place immediately upon completion of finishing of the top surface. The approach slabs will be wetted and covered with visqueen/burlap for a minimum of 7 days.

6. Installation Procedure

The approach slabs will be cast on site in the medians between I-91 NB & I-91 SB. Drawings are included for reference.

During the closure weekend, the cranes will pick the approach slabs (one at a time) and walk down the medians back towards the abutments. Calculations for the lifting attachments and analysis of the approach slabs are included.

The cranes will then walk from the medians onto I-91 (NB/SB). Pending on the slope between the medians & I-91 (NB/SB), the approach slabs may need to be set down prior to walking onto the roadway. The cranes will then walk (with the approach slabs) towards the abutments and the approach slabs will be set in their final position.

Note: Prior to moving the approach slabs the concrete must achieve 28 day design strength (5,000 PSI).

Note: Prior to setting the approach slabs the surface elevation of the backfill we be checked to ensure that it is level and at proper grade.

APPROVED REINFORCING STEEL DRAWINGS

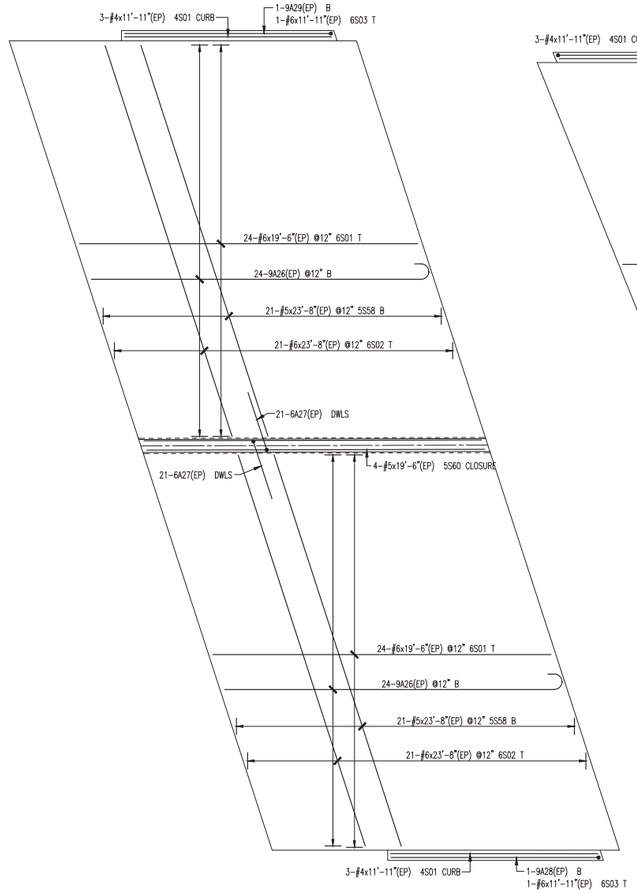

ABUTMENT 1 APPROACH SLAB

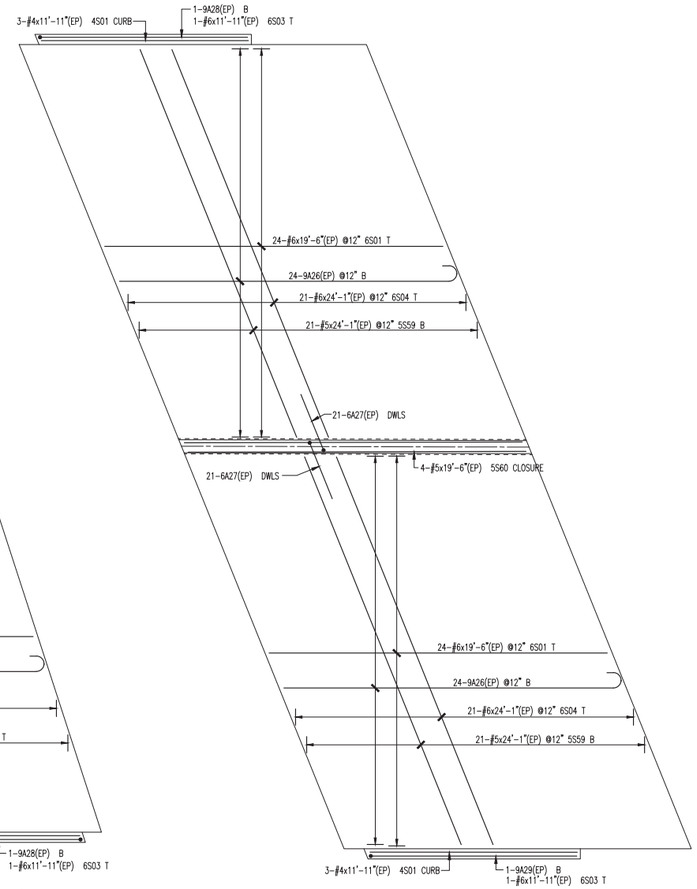

ABUTMENT 2 APPROACH SLAB

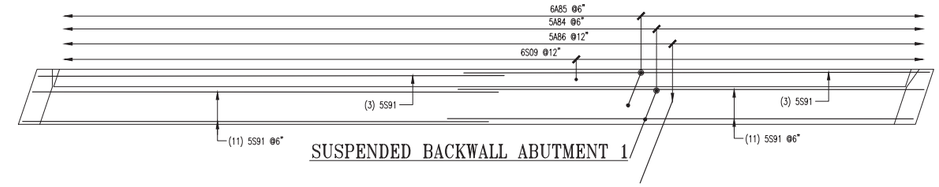

SUSPENDED BACKWALL ABUTMENT 1

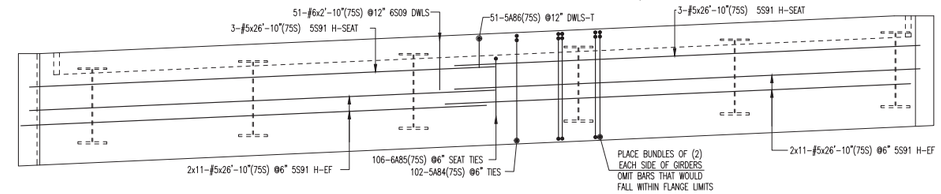

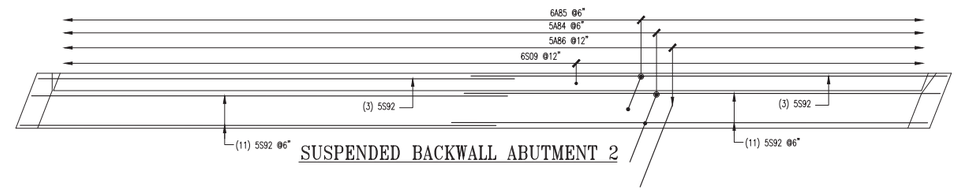

SUSPENDED BACKWALL ABUTMENT 2

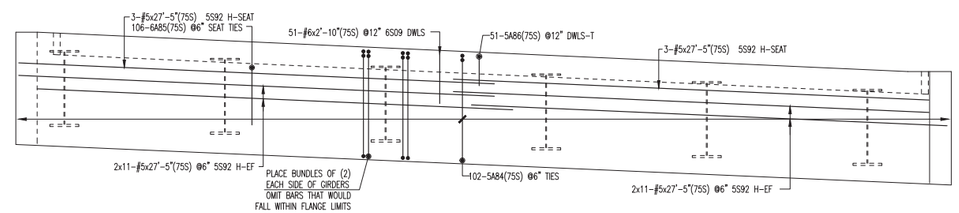

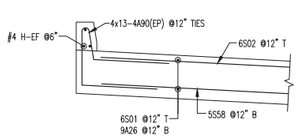

TYPICAL APPROACH SLAB @ CURB

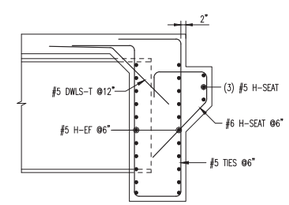

TYPICAL SUSPENDED BACKWALL SECTION

ALL MATERIAL NOTED AS (75S) SHALL BE "ASTM A955" STAINLESS STEEL

ALL MATERIAL NOTED AS "EP" SHALL BE ASTM A1055 GRADE 60 "DUAL COATED"

SEE SHEET R06S FOR BAR LISTS
3" CLR COVER U.N.O.

LAP CHART-U.N.O.

SIZE	TOP BARS ★	OTHER BARS
#11		
#10		
#9		
#8	54"	54"
#7	41"	41"
#6	31"	31"
#5	26"	26"
#4		
#3		

★ -Top bars are horiz. bars with more than 12" of concrete cast below the bars.

Vermont Agency of Transportation
RECEIVED
Harris Rebar ASTM, ASCE, ASLA, CSA Approved 3-12-2015 LAP

CK'D BY RK/GL OK'D BY WL
March 9, 2015
RESUBMIT NO Approved
BY KH DATE 3-12-2015

No.	Description	Date	By
2	FINAL APPROVAL PRINT	03/09/15	CPS
1	APPROVAL PRINT	02/13/15	CPS

Revisions and Issue Record

The full intent and purpose of this drawing is the placing of reinforcing steel bars ONLY. It is NOT to be used as a means of communication between the Architect, Engineer, Contractor or any other Sub-trades.

THIS DRAWING IS NOT TO BE SCALED.

HarrisRebar Barker Steel — National Strength. Local Service.

DETAILED AT:
CANAAN
NEW HAMPSHIRE

Project: BRIDGE 43 S REPLACEMENT
I-91 HARTFORD VT

Drawing: I-91 SOUTHBOUND APPROACH SLABS AND SUSPENDED BACKWALLS

Customer: PCL CIVIL CONSTRUCTORS

Engineer: G LAROCHE

Refer to Release:

Date	Drawn	Chkd.	JOB No.	Dwg. No.
02/09/15	CPS		33505535	R05S

W:\csample\Projects\33505535\Placing Drawings\DWGs\R01S.dwg

Drawing Sheet : R01S — BAR LIST

	Bar Mark	Qty	Size	Total Length	Type	'A'	'B'	'C'	'D'	'E'	'F'	'G'	'H'	'J'	'K'	'O'	'R'
7SS	A14a	1	#5	4'-7"			4'-7"										
	Varies To																
7SS	A14b	1	#5	7'-5"			7'-5"										
7SS	5A08	23	#5	7'-5"	17		2'-5"	2'-7"	2'-5"								
7SS	5A09	14	#5	5'-4"	H91		2'-8 K"	2'-8"						2'-7 K"		9 K"	
7SS	5A10	2	#5	7'-1"	3		2'-5"	4'-8"						2'-7"		3'-10 K"	6'-3 K"
7SS	5A12	8	#5	12'-5"	3		7'-8"	4'-9"						3'-4 K"		3'-3 K"	10'-11 K"
7SS	5A13	14	#5	6'-5"	17		2'-5"	1'-7"	2'-5"								
7SS	5A15	1	#5	11'-6"	3		7'-5 K"	3'-7 K"						1'-5 K"		3'-4"	10'-9 K"
7SS	5A16	1	#5	7'-11"	3		7'-5 K"	5 K"						2 K"		5"	7'-10 K"
7SS	5A64	22	#5	4'-10"	3		2'-5"	2'-5"						1'-7"		1'-9 K"	4'-2 K"
7SS	5S18	7	#5	5'-3"			5'-3"										
7SS	5S19	2	#5	7'-11"			7'-11"										
7SS	5S20	12	#5	9'-2"			9'-2"										
7SS	5S22	11	#5	3'-1"			3'-1"										
7SS	5S23	7	#5	7'-4"			7'-4"										
7SS	5S24	1	#5	5'-6"			5'-6"										
7SS	5S25	1	#5	8'-5"			8'-5"										
7SS	5S46	14	#5	7'-10"			7'-10"										
7SS	5S50	11	#5	5'-7"			5'-7"										
7SS	5S57	23	#5	7'-0"			7'-0"										
7SS	5S76	7	#5	5'-5"			5'-5"										
7SS	5S84	1	#5	5'-8"			5'-8"										
7SS	5S93	7	#5	10'-5"			10'-5"										
7SS	5S94	1	#5	6'-11"			6'-11"										
	5A02	101	#5	7'-5"	17		2'-5"	2'-7"	2'-5"								
	5A03	26	#5	5'-4"	H91		2'-8 K"	2'-8"						2'-7 K"		9 K"	
	5A04	29	#5	4'-10"	3		2'-5"	2'-5"						1'-7"		1'-9 K"	4'-2 K"
	5A05	58	#5	11'-0"	3		5'-6"	5'-6 K"						3'-7"		4'-2 K"	9'-8 K"
	5A11	14	#5	12'-11"	16	2'-5"	4'-7"	1'-2"	4'-9"					3'-4 K"		3'-4 K"	4'-6 K"
	5A65	76	#5	8'-4 K"	25		1'-6"	2'-3 K"	10"	2'-3 K"	1'-6"			2'-2 K"		1'-1 K"	
	5S01	24	#5	9'-8"			9'-8"										
	5S02	24	#5	13'-1"			13'-1"										
	5S03	25	#5	33'-10"			33'-10"										
	5S04	25	#5	34'-8"			34'-8"										
	5S05	2	#5	8'-9"			8'-9"										
	5S06	54	#5	30'-6"			30'-6"										
	5S07	2	#5	18'-9"			18'-9"										
	5S08	23	#5	18'-6"			18'-6"										
	5S09	12	#5	19'-4"			19'-4"										
	5S10	13	#5	19'-9"			19'-9"										
	5S11	12	#5	20'-2"			20'-2"										
	5S12	12	#5	18'-10"			18'-10"										
	5S13	54	#5	12'-0"			12'-0"										
	5S14	11	#5	19'-8"			19'-8"										
	5S15	25	#5	11'-0"			11'-0"										
	5S16	25	#5	10'-2"			10'-2"										
	5S17	23	#5	18'-3"			18'-3"										
	5S21	2	#5	7'-5"			7'-5"										
	5S26	2	#5	3'-5"			3'-5"										
	5S27	48	#5	30'-0"			30'-0"										
	5S40	3	#5	18'-5"			18'-5"										
	5S44	113	#5	5'-2"			5'-2"										
	5S66	14	#5	20'-8"			20'-8"										
	5S71	2	#5	9'-6"			9'-6"										
	5S72	19	#5	10'-6"			10'-6"										
	7S01	11	#7	11'-0"			11'-0"										
	7S02	37	#7	14'-1"			14'-1"										
	7S03	23	#7	19'-8"			19'-8"										
	7S04	218	#7	10'-6"			10'-6"										
	7S07	43	#7	12'-10"			12'-10"										
	8A07	23	#8	14'-3"	17		5'-6"	8'-9"									
	9A01	80	#9	14'-4"	17		5'-7"	8'-9"									
	9S01	80	#9	10'-0"			10'-0"										
7SS	5S95	1	#5	1'-11"			1'-11"										
7SS	5S96	1	#5	5'-1"			5'-1"										
7SS	5S97	3	#5	7'-6"			7'-6"										
7SS	A67a	1	#5	4'-8"			4'-8"										
	Varies To																
7SS	A67b	1	#5	7'-4"			7'-4"										
	5A81	26	#5	13'-5"	3			2'-5"	8'-7"	2'-5"				1'-11 K"		1'-4 K"	11'-4"

ABUTMENT 1 AND WINGWALLS 1 & 2

Drawing Sheet : R05S — BAR LIST

	Bar Mark	Qty	Size	Total Length	Type	'A'	'B'	'C'	'D'	'E'	'F'	'G'	'H'	'J'	'K'	'O'	'R'
EP	4S01	12	#4	11'-11"			11'-11"										
7SS	5A84	204	#5	18'-7"	H66		2'-5"	6'-1"	1'-10"	5'-10"	2'-5"				3 K"		
7SS	5A86	102	#5	5'-4"	3		3'-1"	2'-5"						1'-8 K"	1'-8 K"	4'-9 K"	
EP	5S58	42	#5	23'-8"			23'-8"										
EP	5S59	42	#5	24'-1"			24'-1"										
EP	5S60	8	#5	19'-6"			19'-6"										
7SS	5S91	50	#5	26'-10"			26'-10"										
7SS	5S92	50	#5	27'-5"			27'-5"										
EP	6A27	84	#6	7'-2 K"	511		7'-2 K"							3'-6"			3"
7SS	6A85	212	#6	7'-3"	16	1'-6"	2'-1"	1'-2"	3'-0"					2'-1 K"		2'-1 K"	3'-3 K"
EP	6S01	96	#6	19'-6"			19'-6"										
EP	6S02	42	#6	23'-8"			23'-8"										
EP	6S03	4	#6	11'-11"			11'-11"										
EP	6S04	42	#6	24'-1"			24'-1"										
7SS	6S09	102	#6	2'-10"			2'-10"										
EP	9A26	96	#9	20'-8 K"	1	1'-3"	19'-5 K"								11 K"		
EP	9A28	2	#9	13'-3"	1	1'-3"	12'-0"								11 K"		
EP	9A29	2	#9	13'-2"	1	1'-3"	11'-11"								11 K"		
EP	4A90	52	#4	7'-0"	114		2'-2"	1'-6 K"	3 K"	10"	2'-2"						1 K"

APPROACH SLABS & SUSPENDED BACKWALLS

Drawing Sheet : R04S — BAR LIST

	Bar Mark	Qty	Size	Total Length	Type	'A'	'B'	'C'	'D'	'E'	'F'	'G'	'H'	'J'	'K'	'O'	'R'
7SS	4A25	462	#4	5'-0"	1	6"	4'-8"							4"			
7SS	A70a	4	#5	5'-8"	17		2'-7"	6"	2'-7"								
	Varies To																
7SS	A70b	4	#5	7'-8"	17		3'-6"	6"	3'-6"								
	Varies To																
7SS	A75a	10	#5	6'-5"			6'-5"										
	Varies To																
7SS	A75b	10	#5	9'-1"			9'-1"										
7SS	A78a	1	#5	2'-5"			2'-5"										
	Varies To																
7SS	A78b	1	#5	28'-6"			28'-6"										
7SS	A79a	2	#5	11'-9"			11'-9"										
	Varies To																
7SS	A79b	2	#5	19'-1"			19'-1"										
7SS	A81a	1	#5	1'-6"			1'-6"										
	Varies To																
7SS	A81b	1	#5	27'-8"			27'-8"										
7SS	A82a	2	#5	18'-7"			18'-7"										
	Varies To																
7SS	A82b	2	#5	25'-11"			25'-11"										
7SS	5A67	480	#5	3'-9"	1	7"	3'-2"							5"			
7SS	5A68	378	#5	4'-10"	H1		1'-3"	8 K"	1'-1"	6 K"	1'-3"			5"		2'-4 K"	3"
7SS	5A69	418	#5	7'-9"	H2		10 K"	2'-9"	1'-2 K"	2'-11"				2 K"		5 K"	4 K"
7SS	5A71	76	#5	9'-7"	H3		1'-6"	3'-2 K"	5"	2'-11 K"	1'-6"						
7SS	5A74	123	#5	5'-8"	1	7"	5'-1"							5"			
7SS	5S83	89	#5	24'-6"			24'-6"										
7SS	5S85	8	#5	24'-8"			24'-8"										
7SS	5S86	388	#5	30'-0"			30'-0"										
7SS	5S87	6	#5	11'-6"			11'-6"										
7SS	5S88	6	#5	20'-2"			20'-2"										
7SS	5S89	6	#5	20'-7"			20'-7"										
7SS	5S90	6	#5	11'-9"			11'-9"										
7SS	A76a	1	#6	2'-8"			2'-8"										
	Varies To																
7SS	A76b	1	#6	21'-11"			21'-11"										
7SS	A77a	1	#6	2'-5"			2'-5"										
	Varies To																
7SS	A77b	1	#6	26'-10"			26'-10"										
7SS	A80a	1	#6	1'-6"			1'-6"										
	Varies To																
7SS	A80b	1	#6	27'-8"			27'-8"										
7SS	A83a	1	#6	3'-6"			3'-6"										
	Varies To																
7SS	A83b	1	#6	22'-10"			22'-10"										
7SS	6S06	56	#6	30'-0"			30'-0"										
7SS	6S07	14	#6	26'-4"			26'-4"										
7SS	6S08	504	#6	25'-7"			25'-7"										
7SS	7S09	32	#7	14'-4"			14'-4"										
7SS	7S10	8	#7	12'-9"			12'-9"										
7SS	7S12	32	#7	30'-0"			30'-0"										
7SS	7S13	8	#7	12'-10"			12'-10"										
7SS	8S03	32	#8	30'-0"			30'-0"										
7SS	8S04	8	#8	16'-10"			16'-10"										

DECK AND RAILS

Drawing Sheet : R02S — BAR LIST

	Bar Mark	Qty	Size	Total Length	Type	'A'	'B'	'C'	'D'	'E'	'F'	'G'	'H'	'J'	'K'	'O'	'R'
7SS	A24a	1	#5	3'-1"			3'-1"										
	Varies To																
7SS	A24b	1	#5	7'-4"			7'-4"										
7SS	5A08	26	#5	7'-5"	17		2'-5"	2'-7"	2'-5"								
7SS	5A13	17	#5	6'-5"	17		2'-5"	1'-7"	2'-5"								
7SS	5A22	2	#5	8'-1 K"	3		6'-1 K"	1'-0"					7"		9 K"	8'-11 K"	
7SS	5A23	20	#5	4'-8"	3		2'-4"	2'-4"						1'-11 K"	1'-3 K"	3'-7 K"	
7SS	5A50	14	#5	4'-8"	3		2'-4"	2'-4"						2'-1 K"	11 K"	3'-3 K"	
7SS	5A73	2	#5	6'-6"	3		3'-9 K"	2'-3"						1'-2 K"	1'-10 K"	5'-8 K"	
7SS	5A89	8	#5	12'-5 K"	3		7'-8"	4'-9 K"						3'-4 K"	3'-4 K"	11'-K"	
7SS	5S20	7	#5	9'-2"			9'-2"										
7SS	5S47	2	#5	6'-7"			6'-7"										
7SS	5S48	5	#5	4'-3"			4'-3"										
7SS	5S49	5	#5	3'-0"			3'-0"										
7SS	5S51	11	#5	4'-1"			4'-1"										
7SS	5S52	14	#5	7'-11"			7'-11"										
7SS	5S55	7	#5	7'-8"			7'-8"										
7SS	5S56	7	#5	5'-0"			5'-0"										
7SS	5S57	24	#5	7'-0"			7'-0"										
7SS	5S75	10	#5	7'-9"			7'-9"										
7SS	5S76	5	#5	5'-5"			5'-5"										
7SS	5S77	11	#5	5'-6"			5'-6"										
7SS	5S84	2	#5	3'-8"			3'-8"										
7SS	5S97	3	#5	7'-6"			7'-6"										
	5A02	90	#5	7'-5"	17		2'-5"	2'-7"	2'-5"								
	5A11	15	#5	12'-11"	16	2'-5"	4'-7"	1'-2"	4'-9"					3'-4 K"	3'-4 K"	4'-6 K"	
	5A19	25	#5	4'-8"	3		2'-4"	2'-4"						2'-1 K"	11 K"	3'-3 K"	
	5A21	28	#5	4'-8"	3		2'-4"	2'-4"						1'-11 K"	1'-3 K"	3'-7 K"	
	5A65	76	#5	8'-4 K"	25		1'-6"	2'-3 K"	10"	2'-3 K"	1'-6"			2'-2 K"	1'-1 K"		
	5S27	24	#5	30'-0"			30'-0"										
	5S28	24	#5	35'-4"			35'-4"										
	5S29	24	#5	13'-0"			13'-0"										
	5S30	12	#5	18'-7"			18'-7"										
	5S31	13	#5	19'-0"			19'-0"										
	5S32	13	#5	19'-6"			19'-6"										
	5S33	13	#5	20'-5"			20'-5"										
	5S34	12	#5	19'-11"			19'-11"										
	5S35	50	#5	33'-9"			33'-9"										
	5S36	52	#5	31'-4"			31'-4"										
	5S37	2	#5	6'-10"			6'-10"										
	5S38	2	#5	28'-8"			28'-8"										
	5S39	2	#5	10'-2"			10'-2"										
	5S41	3	#5	19'-5"			19'-5"										
	5S42	54	#5	11'-5"			11'-5"										
	5S43	50	#5	11'-3"			11'-3"										
	5S44	125	#5	5'-2"			5'-2"										
	5S45	29	#5	18'-2"			18'-2"										
	5S53	2	#5	4'-1"			4'-1"										
	5S54	2	#5	5'-1"			5'-1"										
	5S72	19	#5	10'-6"			10'-6"										
	5S74	24	#5	18'-1"			18'-1"										
	5S78	12	#5	19'-4"			19'-4"										
	7S04	224	#7	10'-6"			10'-6"										
	7S05	36	#7	13'-9"			13'-9"										
	7S06	44	#7	12'-6"			12'-6"										
	7S11	21	#7	19'-4"			19'-4"										
	8A07	21	#8	14'-3"	17		5'-6"	8'-9"									
	8A17	82	#9	14'-3"	17		5'-6"	8'-9"									
	9S01	82	#9	10'-0"			10'-0"										
7SS	A86a	1	#5	3'-2"			3'-2"										
	Varies To																
7SS	A86b	1	#5	7'-6"			7'-6"										
7SS	5A82	27	#5	18'-10 K"	3			2'-3"	14'-4 K"	2'-3"				1'-1"	1'-11 K"	18'-4 K"	
	5A83	25	#5	17'-2 K"	3			2'-3"	12'-8 K"	2'-3"				1'-1"	1'-10 K"	16'-5 K"	

ABUTMENT 2 AND WINGWALLS 3 & 4

Drawing Sheet : R03S — BAR LIST

	Bar Mark	Qty	Size	Total Length	Type	'A'	'B'	'C'	'D'	'E'	'F'	'G'	'H'	'J'	'K'	'O'	'R'
	A34a	2	#5	2'-0"			2'-0"										
	Varies To																
	A34b	2	#5	22'-9"			22'-9"										
	A35a	1	#5	6'-0"			6'-0"										
	Varies To																
	A35b	1	#5	8'-9"			8'-9"										
	A37a	1	#5	17'-6"			17'-6"										
	Varies To																
	A37b	1	#5	19'-10"			19'-10"										
	A46a	1	#5	12'-5"			12'-5"										
	Varies To																
	A46b	1	#5	12'-7"			12'-7"										
	A48a	1	#5	17'-1"			17'-1"										
	Varies To																
	A48b	1	#5	17'-3"			17'-3"										
	A51a	2	#5	3'-2"			3'-2"										
	Varies To																
	A51b	2	#5	19'-4"			19'-4"										
	A52a	1	#5	16'-4"			16'-4"										
	Varies To																
	A52b	1	#5	19'-6"			19'-6"										
	A54a	2	#5	7'-8"			7'-8"										
	Varies To																
	A54m	2	#5	12'-10"			12'-10"										
	A60a	1	#5	13'-3"			13'-3"										
	Varies To																
	A60b	1	#5	13'-9"			13'-9"										
	A61a	1	#5	17'-10"			17'-10"										
	Varies To																
	A61b	1	#5	18'-4"			18'-4"										
	5A30	15	#5	9'-8 K"	3		3'-3 K"	4'-3"	2'-2"					3'-0"	3'-0"	8'-5 K"	
	5A31	27	#5	7'-10 K"	20		2'-8"	3'-1 K"	2'-2"								
	5A32	57	#5	7'-8"	17		2'-7"	4'-2"									
	5A38	111	#5	6'-5"	17		2'-5"	1'-7"	2'-5"								
	5A40	5	#5	10'-10 K"	3		2'-2"	6'-4 K"	2'-4 K"					4'-6"	4'-6"	9'-K"	
	5A41	11	#5	8'-10 K"	20		2'-2"	4'-6 K"	2'-2"								
	5A42	5	#5	12'-2 K"	3		3'-4"	6'-4 K"	2'-4 K"					4'-6"	4'-6"	10'-4 K"	
	5A43	11	#5	9'-4 K"	20		2'-8"	4'-8 K"	2'-2"								
	5A55	5	#5	10'-0"	3		2'-2"	5'-8"	2'-2"					4'-0"	4'-0"	8'-4"	
	5A56	12	#5	8'-4 K"	20		2'-2"	4'-K"	2'-2"								
	5A57	5	#5	11'-6"	3		3'-6"	5'-8"	2'-4 K"					4'-0"	4'-0"	9'-10 K"	
	5A58	11	#5	8'-10 K"	20		2'-8"	4'-K"	2'-2"								
	5A66	102	#5	6'-6"	25		1'-6"	1'-4"	10"	1'-4"	1'-6"			1'-3 K"	7 K"		
	5S81	14	#5	25'-6"			25'-6"										
	5S82	2	#5	26'-10"			26'-10"										
	5S63	47	#5	8'-8"			8'-8"										
	5S84	43	#5	12'-6"			12'-6"										
	5S85	109	#5	4'-2"			4'-2"										
	5S87	2	#5	22'-5"			22'-5"										
	5S88	6	#5	7'-8"			7'-8"										
	5S89	2	#5	18'-0"			18'-0"										
	5S70	2	#5	26'-7"			26'-7"										
	5S71	23	#5	9'-6"			9'-6"										
	5S72	3	#5	10'-6"			10'-6"										
	5S73	4	#5	8'-6"			8'-6"										
	5S79	16	#5	20'-6"			20'-6"										
	5S80	36	#5	26'-6"			26'-6"										
	5S81	22	#5	15'-6"			15'-6"										
	5S82	193	#5	7'-6"			7'-6"										
	A47a	1	#6	12'-5"			12'-5"										
	Varies To																
	A47p	1	#6	12'-7"			12'-7"										
	A62a	1	#6	13'-3"			13'-3"										
	Varies To																
	A62p	1	#6	13'-9"			13'-9"										
	A63a	1	#6	17'-10"			17'-10"										
	Varies To																
	A63p	1	#6	18'-4"			18'-4"										
	6A44	64	#6	8'-2"	17		3'-7"	4'-7"									
	6S05	26	#6	8'-6"			8'-6"										
	A36a	1	#7	17'-6"			17'-6"										
	Varies To																
	A38p	1	#7	19'-10"			19'-10"										
	A53a	1	#7	16'-4"			16'-4"										
	Varies To																
	A53p	1	#7	19'-6"			19'-6"										
	7A33	32	#7	9'-0"	17		3'-7"	5'-5"									
	7S08	33	#7	9'-6"			9'-6"										
	8S01	32	#8	9'-6"			9'-6"										
	8S02	33	#8	10'-6"			10'-6"										
	A36a	2	#9	12'-1"			12'-1"										
	Varies To																
	A36b	2	#5	14'-2"			14'-2"										
	A45a	2	#5	7'-8"			7'-8"										
	Varies To																
	A45m	2	#5	7'-11"			7'-11"										
	A48a	1	#6	17'-1"			17'-1"										
	Varies To																
	A48p	1	#6	17'-3"			17'-3"										
	A59a	2	#5	8'-2"			8'-2"										
	Varies To																
	A59m	2	#5	9'-2"			9'-2"										

RETAINING WALLS 1 THRU 4

MATERIAL/COATING CODE TO THE LEFT OF BAR MARK ADDED BY PCL

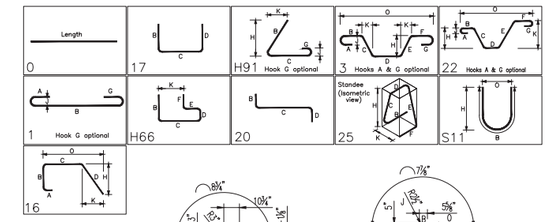

Legend:

IF Inside Face
OF Outside Face
NF Near Face
FF Far Face
EF Each Face
V Vertical
H Horizontal
EW Each Way
T Top
SB Support Bars
B/Bot Bottom
BB Bond Beam
MV Masonry Vert.
MD Masonry Dwls

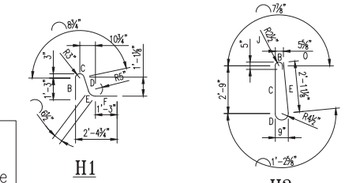

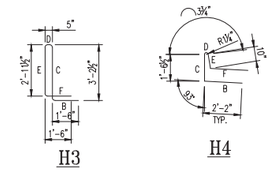

SPECIAL BEND DETAILS

No.	Description	Date	By
2	FINAL APPROVAL PRINT	03/09/15	CPS
1	APPROVAL PRINT	02/13/15	CPS

Revisions and Issue Record

The full intent and purpose of this drawing is the placing of reinforcing steel bars ONLY. It is NOT to be used as a means of communication between the Architect, Engineer, Contractor or any other Sub-trades.

THIS DRAWING IS NOT TO BE SCALED.

HarrisRebar Harbor Steel — National Strength. Local Service.

DETAILED AT: CANAAN NEW HAMPSHIRE

Project: BRIDGE 43 S REPLACEMENT I-91 HARTFORD VT

Drawing: I-91 SOUTHBOUND BAR SCHEDULES

Customer: PCL CIVIL CONSTRUCTORS

Engineer: G LAROCHE

Refer to Release:

Date	Drawn	Chkd.	JOB No.	Dwg. No.
02/09/15	CPS		33505535	R06S

Vermont Agency of Transportation
RECEIVED
CK'D BY RK/GL OK'D BY WL
March 9, 2015
RESUBMIT NO Approved AsNoted
BY KH DATE 3-12-2015

W:\csample\Projects\33505535\Placing Drawings\DWGs\R01S.dwg

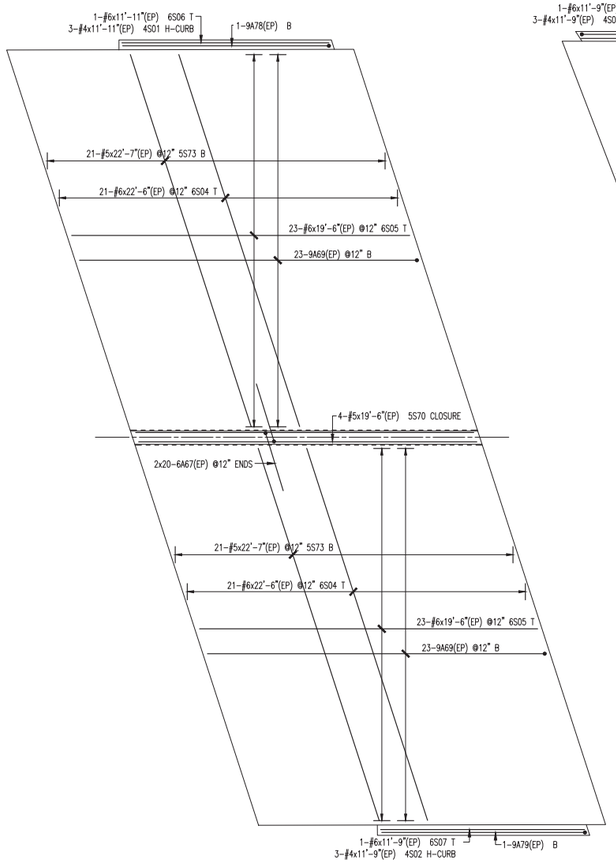

ABUTMENT 3 APPROACH SLAB

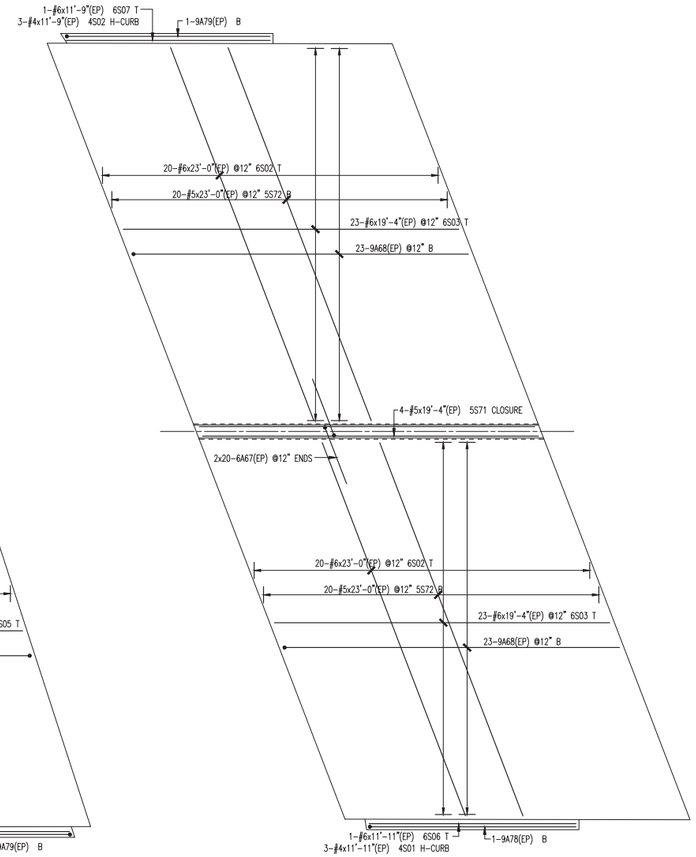

ABUTMENT 4 APPROACH SLAB

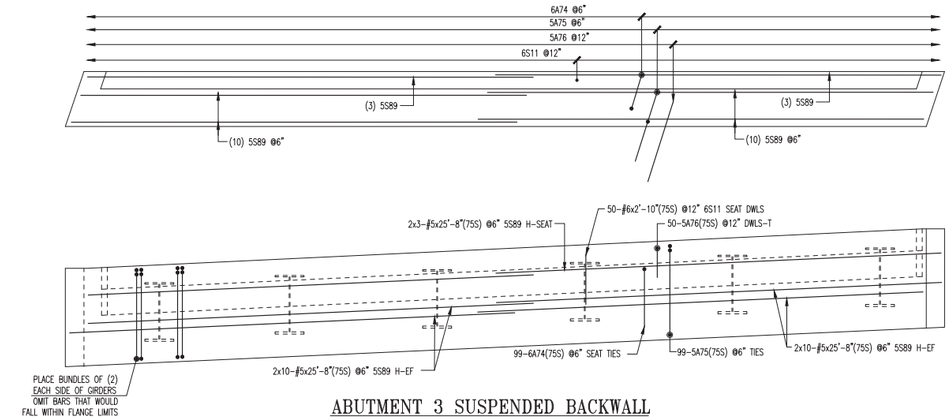

ABUTMENT 3 SUSPENDED BACKWALL

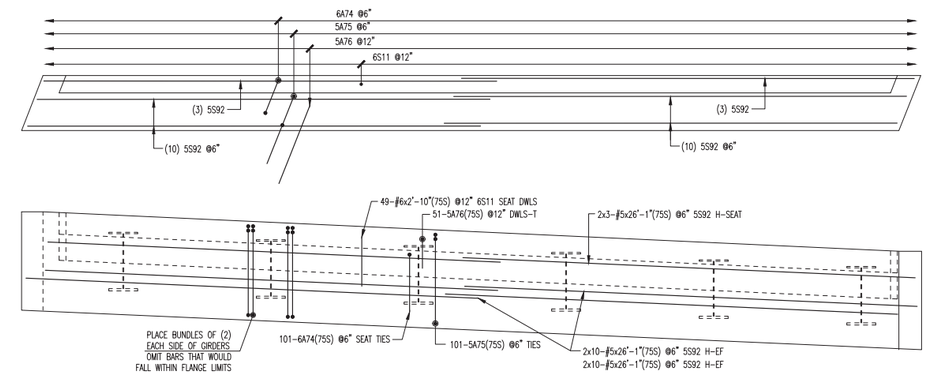

ABUTMENT 4 SUSPENDED BACKWALL

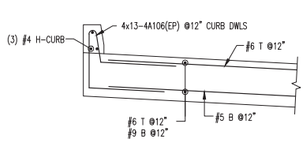

TYPICAL APPROACH SLAB @ CURB

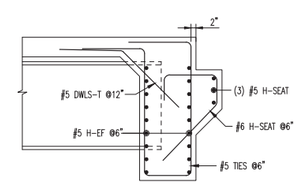

TYPICAL SUSPENDED BACKWALL SECTION

SEE SHEET R06S FOR BAR LISTS
3" CLR COVER U.N.O.

LAP CHART-U.N.O.

SIZE	TOP BARS ★	OTHER BARS
#11		
#10		
#9		
#8	54"	54"
#7	41"	41"
#6	31"	31"
#5	26"	26"
#4		
#3		

★ -Top bars are horiz. bars with more than 12" of concrete cast below the bars.

Vermont Agency of Transportation
RECEIVED
Harris# 96915-3276-R05N 405 Approved 3-12-2015.pdf
CK'D BY RK/GL OK'D BY WL
March 9, 2015
RESUBMIT NO Approved
BY KH DATE 3-12-2015

ALL MATERIAL ON THIS DRAWING NOTED AS (75S) SHALL BE ASTM A955 STAINLESS STEEL

ALL MATERIAL ON THIS DRAWING NOTED AS (EP) SHALL BE ASTM A1055 GR60 "DUAL COATED" REINF.

No.	Description	Date	By
2	FINAL APPROVAL PRINT	03/09/15	CPS
1	APPROVAL PRINT	02/18/15	CPS

Revisions and Issue Record

The full intent and purpose of this drawing is the placing of reinforcing steel bars ONLY. It is NOT to be used as a means of communication between the Architect, Engineer, Contractor or any other Sub-trades.

THIS DRAWING IS NOT TO BE SCALED.

HarrisRebar Harker Steel National Strength. Local Service.

DETAILED AT:
CANAAN
NEW HAMPSHIRE

Project: HARTFORD LATERAL BRIDGE
I-91 NORTHBOUND

Drawing: APPROACH SLABS AND BACKWALLS REINF.

Customer: PCL CIVIL CONSTRUCTORS

Engineer: G. LAROCHE

Refer to Release:

Date	Drawn	Chkd.	JOB No.	Dwg. No.
02/10/15	CPS		33505535	R05N

W:\csample\Projects\33505535\Placing Drawings\DWGs\R01N.dwg

Drawing Sheet : R01N — BAR LIST

	Bar Mark	Qty	Size	Total Length	Type	'A'	'B'	'C'	'D'	'E'	'F'	'G'	'H'	'J'	'K'	'O'	'R'
	5S23	24	#5	30'-0"			30'-0"										
	5S01	24	#5	35'-11"			35'-11"										
	5S02	24	#5	13'-0"			13'-0"										
	7S01	224	#7	10'-6"			10'-6"										
	5S63	19	#5	10'-6"			10'-6"										
	5A01	76	#5	8'-5 ½"	25		1'-6"	2'-3 ¾"	10"	2'-3 ¾"	1'-6"		2'-3"		1'-1 ½"		
	8A02	86	#8	15'-3"	17		5'-6"	9'-9"									
	5S86	129	#5	5'-2"			5'-2"										
	7S02	17	#7	14'-3"			14'-3"										
	7S03	12	#7	14'-8"			14'-8"										
	7S04	12	#7	15'-2"			15'-2"										
	7S07	12	#7	15'-7"			15'-7"										
	7S06	12	#7	16'-1"			16'-1"										
	7S05	21	#7	16'-6"			16'-6"										
	5S09	23	#5	14'-3"			14'-3"										
	5S07	14	#5	14'-8"			14'-8"										
	5S03	12	#5	15'-2"			15'-2"										
	5S04	12	#5	15'-7"			15'-7"										
	5S05	12	#5	16'-1"			16'-1"										
	5S18	52	#5	16'-6"			16'-6"										
	5S06	40	#5	32'-7"			32'-7"										
	5S24	42	#5	32'-9"			32'-9"										
	5S26	48	#5	11'-2"			11'-2"										
	5A03	90	#5	7'-5"	17		2'-5"	2'-7"	2'-5"								
	5S08	36	#5	11'-5"			11'-5"										
	8A04	20	#8	14'-3"	17		5'-6"	8'-9"									
	5S17	14	#5	12'-7"			12'-7"										
	7S08	16	#7	12'-7"			12'-7"										
75S	5S10	4	#5	7'-9"			7'-9"										
75S	5A05	24	#5	7'-5"	17		2'-5"	2'-7"	2'-5"								
75S	5S11	10	#5	8'-1"			8'-1"										
75S	5S12	10	#5	6'-7"			6'-7"										
75S	5A07	18	#5	6'-5"	17		2'-5"	1'-7"	2'-5"								
75S	A08a	2	#5	2'-10"			2'-10"										
	Varies To																
75S	A08f	2	#5	7'-7"			7'-7"										
75S	5S13	3	#5	7'-0"			7'-0"										
75S	A09a	1	#5	2'-9"			2'-9"										
	Varies To																
75S	A09h	1	#5	6'-11"			6'-11"										
75S	5A11	2	#5	9'-7"	3		8'-9 ¾"	10"					6 ¾"		7 ½"	9'-4 ¾"	
75S	5A12	20	#5	4'-9 ½"	3		2'-5"	2'-4 ¾"					2'-0"		1'-4"	3'-9"	
	5S83	2	#5	6'-6"			6'-6"										
	5A13	18	#5	12'-11"	16	2'-5"	4'-7"	1'-2"	4'-9"				3'-4 ½"		3'-4 ½"	4'-6 ½"	
75S	5S14	24	#5	6'-3"			6'-3"										
75S	5S15	12	#5	8'-0"			8'-0"										
75S	5A15	12	#5	4'-10"	3		2'-5"	2'-5"					2'-3 ¾"		8 ½"	3'-1 ½"	
	5S16	2	#5	5'-3"			5'-3"										
	5A16	23	#5	4'-10"	3		2'-5"	2'-5"					2'-3 ¾"		8 ½"	3'-1 ½"	
75S	5S22	7	#5	8'-3"			8'-3"										
75S	5S21	2	#5	3'-7"			3'-7"										
75S	5A17	2	#5	5'-7"	3		3'-8"	1'-11"					11"		1'-8 ½"	5'-4 ½"	
75S	5S19	6	#5	8'-0"			8'-0"										
75S	5S20	6	#5	5'-3"			5'-3"										
75S	5A18	8	#5	11'-7"	3		6'-10"	4'-9"					3'-4 ¾"		3'-3 ¾"	10'-1 ¾"	
	5A97	18	#5	4'-9 ½"	3		2'-5"	2'-4 ¾"					2'-0"		1'-4"	3'-9"	
75S	A10a	1	#5	2'-4"			2'-4"										
	Varies To																
75S	A10l	1	#5	6'-9"			6'-9"										
	7S22	4	#7	19'-10"			19'-10"										
	5A108	23	#5	16'-3"	3			2'-2 ½"	11'-10"	2'-2 ½"			1'-4"		1'-9"	15'-4"	
	5A109	18	#5	18'-10 ½"	3			2'-3"	14'-4 ¾"	2'-3"			1'-1"		1'-11 ¾"	18'-4 ¾"	

ABUTMENT 1 AND WING WALLS 1&2

Drawing Sheet : R02N — BAR LIST

	Bar Mark	Qty	Size	Total Length	Type	'A'	'B'	'C'	'D'	'E'	'F'	'G'	'H'	'J'	'K'	'O'	'R'
	5A03	92	#5	7'-5"	17		2'-5"	2'-7"	2'-5"								
75S	5S35	19	#5	6'-5"			6'-5"										
75S	5A05	22	#5	7'-5"	17		2'-5"	2'-7"	2'-5"								
75S	5S39	16	#5	6'-8"			6'-8"										
75S	5S36	6	#5	5'-8"			5'-8"										
75S	5S37	6	#5	5'-0"			5'-0"										
75S	5S38	6	#5	7'-8"			7'-8"										
75S	5S40	10	#5	4'-0"			4'-0"										
75S	5A07	18	#5	6'-5"	17		2'-5"	1'-7"	2'-5"								
	5S55	2	#5	4'-0"			4'-0"										
	5A13	18	#5	12'-11"	16	2'-5"	4'-7"	1'-2"	4'-9"				3'-4 ½"		3'-4 ½"	4'-6 ½"	
	5A20	27	#5	5'-4"	H91		2'-8"	2'-8"					2'-7"		10 ½"		
	5S42	2	#5	5'-0"			5'-0"										
75S	5S22	6	#5	8'-3"			8'-3"										
75S	5S41	2	#5	3'-5"			3'-5"										
75S	5A22	2	#5	5'-3"	3		3'-2"	2'-1"					1'-¾"		1'-9 ½"	4'-11 ½"	
75S	5A18	8	#5	11'-7"	3		6'-10"	4'-9"					3'-4 ¾"		3'-3 ¾"	10'-1 ¾"	
	5S43	30	#5	19'-7"			19'-7"										
	5S86	124	#5	5'-2"			5'-2"										
	5S53	26	#5	17'-3"			17'-3"										
	5S46	22	#5	11'-9"			11'-9"										
	5S47	38	#5	10'-10"			10'-10"										
75S	5S50	12	#5	7'-6"			7'-6"										
75S	5S49	2	#5	4'-4"			4'-4"										
75S	5S48	2	#5	6'-3"			6'-3"										
75S	5A23	2	#5	7'-11"	3		7'-4"	7"					3 ½"		6 ½"	7'-10 ½"	
75S	A24a	1	#5	4'-3"			4'-3"										
	Varies To																
75S	A24i	1	#5	6'-8"			6'-8"										
75S	5S51	5	#5	6'-11"			6'-11"										
	8A25	23	#8	13'-4"	17		4'-7"	8'-9"									
	5S52	11	#5	15'-7"			15'-7"										
	7S15	16	#7	15'-7"			15'-7"										
	7S16	24	#7	17'-3"			17'-3"										
75S	5A27	16	#5	4'-8"	3		2'-4"	2'-4"					1'-8 ½"		1'-7 ½"	3'-11 ½"	
	5S54	2	#5	3'-11"			3'-11"										
	5S23	32	#5	30'-0"			30'-0"										
	5S84	16	#5	9'-6"			9'-6"										
	7S09	148	#7	8'-6"			8'-6"										
	5S24	48	#5	32'-9"			32'-9"										
	5S25	26	#5	33'-0"			33'-0"										
	5S26	2	#5	11'-2"			11'-2"										
	5S27	26	#5	32'-1"			32'-1"										
	5S28	1	#5	15'-0"			15'-0"										
	5S29	1	#5	14'-1"			14'-1"										
	5S30	12	#5	18'-2"			18'-2"										
	7S10	12	#7	18'-2"			18'-2"										
	7S11	12	#7	17'-8"			17'-8"										
	5S31	12	#5	17'-8"			17'-8"										
	5S32	12	#5	18'-8"			18'-8"										
	7S12	12	#7	18'-8"			18'-8"										
	5S44	12	#5	19'-1"			19'-1"										
	7S13	12	#7	19'-1"			19'-1"										
	5S45	12	#5	19'-10"			19'-10"										
	7S14	12	#7	19'-10"			19'-10"										
	5S33	27	#5	11'-0"			11'-0"										
	5S34	27	#5	7'-4"			7'-4"										
75S	9S01	13	#9	40'-0"			40'-0"										
75S	A26a	1	#5	4'-3"			4'-3"										
	Varies To																
75S	A26m	1	#5	6'-8"			6'-8"										
75S	5A98	12	#5	5'-4"	H91		2'-8"	2'-8"					2'-7"		10 ½"		
	8A99	85	#8	14'-4"	17		4'-7"	9'-9"									
	5A101	24	#5	4'-8"	3		2'-4"	2'-4"					1'-8 ½"		1'-7 ½"	3'-11 ½"	
	5A110	27	#5	12'-11 ½"	3			2'-2 ¾"	8'-6"	2'-2 ¾"			1'-10"		1'-3"	11'-0"	
	5A111	22	#5	21'-2"	3			2'-3"	16'-8 ¾"	2'-3"			11"		2'-¾"	20'-9 ¾"	

ABUTMENT 2 AND WING WALLS 3&4

Drawing Sheet : R03N — BAR LIST

	Bar Mark	Qty	Size	Total Length	Type	'A'	'B'	'C'	'D'	'E'	'F'	'G'	'H'	'J'	'K'	'O'	'R'
	5S62	60	#5	8'-8"			8'-8"										
	5S82	146	#5	7'-6"			7'-6"										
	5S56	14	#5	5'-6"			5'-6"										
	5A29	20	#5	7'-10 ½"	20		2'-2"	3'-6 ½"	2'-2"								
	5A30	5	#5	9'-3 ½"	3		2'-2"	4'-11 ½"	2'-2"				3'-6"		3'-6"	7'-10"	
	5A31	5	#5	9'-7 ½"	3		3'-3 ¾"	4'-11 ½"	1'-4 ½"				3'-6"		3'-6"	8'-2"	
	5S84	15	#5	9'-6"			9'-6"										
	5S65	87	#5	4'-2"			4'-2"										
	5A33	48	#5	7'-9"	17		3'-7"	4'-2"									
	5S66	20	#5	15'-6"			15'-6"										
	5S57	16	#5	21'-6"			21'-6"										
	A35a	1	#5	10'-7"			10'-7"										
	Varies To																
	A35p	1	#5	10'-10"			10'-10"										
	A36a	12	#5	6'-11"			6'-11"										
	A37a	7	#5	6'-11"			6'-11"										
	Varies To																
	A38b	1	#5	10'-10"			10'-10"										
	5A40	95	#5	5'-11"	17		2'-2"	1'-7"	2'-2"								
	5S83	44	#5	6'-6"			6'-6"										
	5S58	14	#5	4'-8"			4'-8"										
	5S59	14	#5	2'-5"			2'-5"										
	5S60	2	#5	7'-1"			7'-1"										
	A41a	1	#5	6'-5"			6'-5"										
	Varies To																
	A41h	1	#5	9'-4"			9'-4"										
	A42a	1	#5	6'-5"			6'-5"										
	Varies To																
	A42n	1	#5	9'-4"			9'-4"										
	5A45	5	#5	11'-2"	3		3'-4"	5'-8"	2'-2"				4'-0"		4'-0"	9'-6"	
	5S85	25	#5	8'-0"			8'-0"										
	5S63	28	#5	10'-6"			10'-6"										
	5A43	20	#5	8'-4 ½"	20		2'-2"	4'-½"	2'-2"								
	5A44	5	#5	10'-0"	3		2'-2"	5'-8"	2'-2"				4'-0"		4'-0"	8'-4"	
	5S61	20	#5	26'-6"			26'-6"										
	A47a	1	#6	16'-10"			16'-10"										
	Varies To																
	A47p	1	#6	17'-4"			17'-4"										
	A50a	3	#5	7'-8"			7'-8"										
	Varies To																
	A50d	3	#5	8'-2"			8'-2"										
	A51a	3	#5	12'-5"			12'-5"										
	Varies To																
	A51c	2	#5	12'-9"			12'-9"										
	A52a	3	#5	16'-11"			16'-11"										
	Varies To																
	A52c	2	#5	17'-3"			17'-3"										
	5A53	5	#5	8'-4"	3		3'-4"	2'-10"	2'-2"				2'-0"		2'-0"	7'-6"	
	5A54	10	#5	7'-2"	3		2'-2"	2'-10"	2'-2"				2'-0"		2'-0"	6'-4"	
	5A55	9	#5	5'-10 ½"	20		2'-8"	1'-½"	2'-2"								
	5A56	18	#5	6'-4 ½"	20		2'-2"	2'-½"	2'-2"								
	5S86	8	#5	5'-2"			5'-2"										
	5S67	4	#5	23'-6"			23'-6"										
	5S68	4	#5	34'-6"			34'-6"										
	A58a	2	#5	5'-9"			5'-9"										
	Varies To																
	A58g	2	#5	33'-4"			33'-4"										
	5S69	2	#5	35'-4"			35'-4"										
	A59a	1	#7	16'-10"			16'-10"										
	Varies To																
	A59p	1	#7	18'-6"			18'-6"										
	A60a	2	#5	14'-1"			14'-1"										
	Varies To																
	A60h	2	#5	15'-8"			15'-8"										
	A61a	2	#5	10'-5"			10'-5"										
	Varies To																
	A61h	2	#5	11'-11"			11'-11"										
	A62a	2	#5	6'-0"			6'-0"										
	Varies To																
	A62k	2	#5	8'-2"			8'-2"										
	A63a	1	#5	6'-0"			6'-0"										
	Varies To																
	A63l	1	#5	8'-4"			8'-4"										
	A64a	1	#5	10'-6"			10'-6"										
	Varies To																
	A64h	1	#5	12'-0"			12'-0"										
	A65a	1	#5	14'-2"			14'-2"										
	Varies To																
	A65h	1	#5	15'-9"			15'-9"										
	A66a	1	#5	17'-0"			17'-0"										
	Varies To																
	A66h	1	#5	18'-6"			18'-6"										
	5A96	90	#5	6'-6"	25		1'-6"	1'-4"	10"	1'-4"	1'-6"		1'-3 ½"		7 ¾"		
	5A01	9	#5	8'-5 ½"	25		1'-6"	2'-3 ¾"	10"	2'-3 ¾"	1'-6"		2'-3"		1'-1 ½"		
	A34a	1	#5	14'-4"			14'-4"										
	Varies To																
	A34p	1	#5	14'-7"			14'-7"										
	Varies To																
	A39b	1	#5	14'-7"			14'-7"										
	A49a	6	#5	7'-8"			7'-8"										
	Varies To																
	A49d	4	#5	8'-3"			8'-3"										
	6S12	34	#6	9'-6"			9'-6"										
	5A102	32	#5	8'-2"	17		3'-7"	~~4'-7"~~ 4'-2									
	8S04	34	#8	9'-6"			9'-6"										
	6A103	32	#6	10'-1"	17		3'-7"	~~6'-6"~~ 4'-7"									
	A48a	1	#6	12'-4"			12'-4"										
	Varies To																
	A48p	1	#6	12'-10"			12'-10"										
	5A104	54	#5	10'-1"	17		3'-7"	~~6'-6"~~ 4'-2									
	7S21	16	#7	9'-6"			9'-6"										
	7A105	16	#7	9'-9"	17		3'-7"	~~6'-2"~~ 6'-5"									

RETAINING WALLS 5,6,7,8

Drawing Sheet : R04N — BAR LIST

	Bar Mark	Qty	Size	Total Length	Type	'A'	'B'	'C'	'D'	'E'	'F'	'G'	'H'	'J'	'K'	'O'	'R'
75S	8S02	8	#8	16'-5"			16'-5"										
75S	8S03	32	#8	30'-0"			30'-0"										
75S	7S17	8	#7	12'-5"			12'-5"										
75S	7S18	32	#7	30'-0"			30'-0"										
75S	5A70	418	#5	7'-9"	H2		10 ½"	2'-9"	1'-2 ½"	2'-11"				2 ½"		5 ½"	4 ½"
75S	5A71	378	#5	4'-10"	H1		1'-3"	8 ¾"	1'-1"	6 ½"	1'-3"			5"		2'-4 ¾"	3"
75S	5A72	76	#5	9'-7"	H3		1'-6"	3'-2 ½"	5"	2'-11 ½"	1'-6"						
75S	7S19	8	#7	12'-9"			12'-9"										
75S	7S20	32	#7	14'-4"			14'-4"										
75S	A73a	4	#5	5'-8"	17		2'-7"	6"	2'-7"								
	Varies To																
75S	A73i	4	#5	7'-6"	17		3'-6"	6"	3'-6"								
75S	5S76	376	#5	30'-0"			30'-0"										
75S	5S74	94	#5	24'-5"			24'-5"										
75S	6S08	507	#6	24'-7"			24'-7"										
75S	A82a	1	#6	2'-2"			2'-2"										
	Varies To																
75S	A82r	1	#6	25'-5"			25'-5"										
75S	6S09	56	#6	30'-0"			30'-0"										
75S	6S10	14	#6	26'-1"			26'-1"										
75S	A83a	1	#6	4'-6"			4'-6"										
	Varies To																
75S	A83n	1	#6	22'-4"			22'-4"										
75S	5A84	124	#5	5'-4"	1	7"	4'-9"							5"			
75S	4A85	460	#4	4'-10"	1	6"	4'-4"							4"			
75S	5A86	481	#5	3'-4 ½"	1	7"	2'-9 ½"							5"			
75S	A88a	1	#5	2'-7"			2'-7"										
	Varies To																
75S	A88s	1	#5	27'-4"			27'-4"										
75S	A89a	1	#5	18'-2"			18'-2"										
	Varies To																
75S	A89f	1	#5	25'-0"			25'-0"										
75S	A90a	1	#5	17'-10"			17'-10"										
	Varies To																
75S	A90f	1	#5	24'-9"			24'-9"										
75S	5S78	7	#5	18'-6"			18'-6"										
75S	5S79	6	#5	10'-0"			10'-0"										
75S	A91a	1	#5	2'-2"			2'-2"										
	Varies To																
75S	A91s	1	#5	26'-10"			26'-10"										
75S	A92a	1	#5	18'-2"			18'-2"										
	Varies To																
75S	A92f	1	#5	25'-0"			25'-0"										
75S	A93a	1	#5	17'-11"			17'-11"										
	Varies To																
75S	A93f	1	#5	24'-9"			24'-9"										
75S	5S80	6	#5	19'-11"			19'-11"										
75S	5S81	6	#5	11'-5"			11'-5"										
75S	A80a	1	#6	2'-7"			2'-7"										
	Varies To																
75S	A80r	1	#6	25'-11"			25'-11"										
75S	A81a	1	#6	5'-4"			5'-4"										
	Varies To																
75S	A81m	1	#6	21'-10"			21'-10"										
75S	A95a	5	#5	6'-3"			6'-3"										
	Varies To																
75S	A95i	5	#5	8'-10"			8'-10"										
75S	A94a	5	#5	6'-4"			6'-4"										
	Varies To																
75S	A94i	5	#5	8'-11"			8'-11"										

DECK REINFORCEMENT

Drawing Sheet : R05N — BAR LIST

	Bar Mark	Qty	Size	Total Length	Type	'A'	'B'	'C'	'D'	'E'	'F'	'G'	'H'	'J'	'K'	'O'	'R'
75S	6A74	200	#6	7'-3"	16	1'-0"	2'-1"	1'-2"	3'-0"				2'-1 ½"		2'-1 ½"	3'-3 ½"	
75S	5A75	200	#5	16'-9"	H66		2'-5"	5'-2"	1'-10"	4'-11"	2'-5"				3 ½"		
75S	5A76	101	#5	5'-6"	3		3'-1"	2'-5"					1'-8 ½"		1'-8 ½"	4'-9 ½"	
EP	9A78	2	#9	13'-2"	1	1'-3"	11'-11"							11 ¾"			
EP	6S06	2	#6	11'-11"			11'-11"										
EP	4S01	6	#4	11'-11"			11'-11"										
EP	9A79	2	#9	13'-0"	1	1'-3"	11'-9"							11 ¾"			
EP	6S07	2	#6	11'-9"			11'-9"										
EP	4S02	6	#4	11'-9"			11'-9"										
75S	5S92	46	#5	26'-1"			26'-1"										
75S	6S11	99	#6	2'-10"			2'-10"										
EP	9A69	46	#9	20'-8 ½"	1	1'-3"	19'-5 ¾"							11 ¾"			
EP	6S05	46	#6	19'-6"			19'-6"										
EP	9A68	46	#9	20'-7"	1	1'-3"	19'-4"							11 ¾"			
EP	6S03	46	#6	19'-4"			19'-4"										
EP	6S02	40	#6	23'-0"			23'-0"										
EP	5S72	40	#5	23'-0"			23'-0"										
EP	5S73	42	#5	22'-7"			22'-7"										
EP	6S04	42	#6	22'-6"			22'-6"										
EP	5S70	4	#5	19'-6"			19'-6"										
EP	5S71	4	#5	19'-4"			19'-4"										
EP	6A67	80	#6	7'-2 ½"	S11		7'-2 ¾"						3'-6"			7"	
75S	5S89	46	#5	25'-8"			25'-8"										
EP	4A106	52	#4	7'-0"	H4		2'-2"	1'-6 ½"	3 ¾"	10"	2'-2"						1 ½"

APPROACH SLABS AND SUSPENDED BACKWALLS

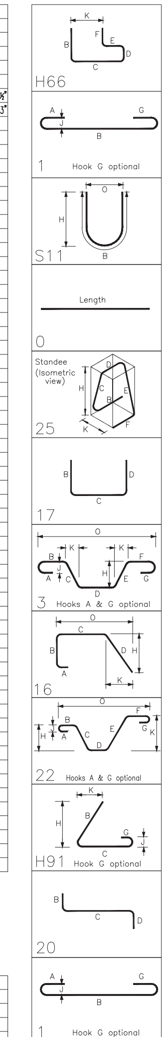

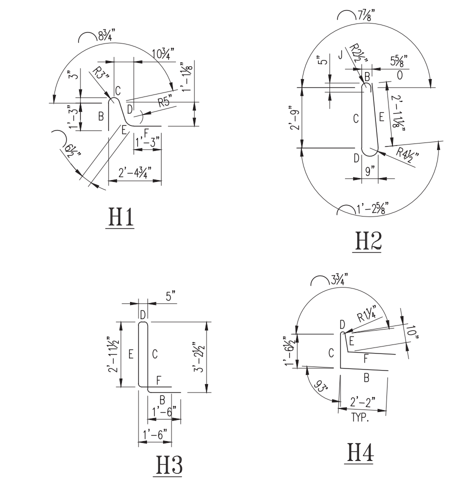

SPECIAL BEND DETAILS

MATERIAL/COATING CODE TO THE LEFT OF BAR MARK ADDED BY PCL

Vermont Agency of Transportation
RECEIVED
CK'D BY RK/GL OK'D BY WL
March 9, 2015
RESUBMIT NO Approved AsNoted
BY KH DATE 3-12-2015

No.	Description	Date	By
2	FINAL APPROVAL PRINT	03/09/15	CPS
1	APPROVAL PRINT	02/18/15	CPS

Revisions and Issue Record

The full intent and purpose of this drawing is the placing of reinforcing steel bars ONLY. It is NOT to be used as a means of communication between the Architect, Engineer, Contractor or any other Sub-trades.

THIS DRAWING IS NOT TO BE SCALED.

HarrisRebar Barker Steel — National Strength. Local Service.

DETAILED AT: CANAAN NEW HAMPSHIRE

Project: HARTFORD LATERAL BRIDGE I-91 NORTHBOUND

Drawing: BAR SCHEDULES

Customer: PCL CIVIL CONSTRUCTORS

Engineer: G. LAROCHE

Refer to Release:

Date	Drawn	Chkd.	JOB No.	Dwg. No.
02/10/15	CPS		33505535	R06N

W:\csample\Projects\33505535\Placing Drawings\DWGs\R01N.dwg

APPROVED CONCRETE MIX DESIGN

STATE OF VERMONT
AGENCY OF TRANSPORTATION
MATERIAL AND RESEARCH SECTION - STRUCTURAL CONCRETE UNIT

STRUCTURAL CONCRETE MIX DESIGN SUBMISSION

Agency Use Only	
Mix ID	HP00-A-0
Mix Design #	
Approved by	
Approved Date	
Spec Book Year	2011

Concrete class: HPC A
Additional Description
Ready Mix Supplier: CARROLL CONCRETE - W LEBANON, NH - RT 12A
Designed By Scott Jordan
Design strength 5000 PSI
Mix Design Style: Conventional
Agg weight - SSD or Dry: SSD

Mix designs are valid for a 12 month period from date of approval or unless there is a change in material, material property or design parameter.

Cement:				Specific Gravity			lb/cy	0.00 cf
701.02	Source:							
	Brand Name:							
Cement Type III:				Specific Gravity			lb/cy	0.00 cf
701.04	Source:							
	Brand Name:							
Blended Cement:				Specific Gravity	2.980	660	lb/cy	3.55 cf
701.06	Source:	LAFARGE - TERCEM - MONTREAL, EAST PLANT						
	Brand Name:							
Cement with Slag:				Specific Gravity			lb/cy	0.00 cf
701.07	Source:							
	Brand Name:							
Pozzolan:				Specific Gravity			lb/cy	0.00 cf
725.03(a)	Source:							
	Brand Name:							
Fly Ash:				Specific Gravity			lb/cy	0.00 cf
725.03(a)	Source:							
	Brand Name:							
Silica Fume:				Specific Gravity			lb/cy	0.00 cf
725.03(b)	Source:							
	Brand Name:							
Slag:				Specific Gravity			lb/cy	0.00 cf
725.03(c)	Source:							
	Brand Name:							
Water					32 gals	267.04	lb/cy	4.28 cf
Air Content Target					7.0 %			1.89 cf
Coarse Aggregate 3/8"			Absorption	Specific Gravity			lb/cy	0.00 cf
704.02A	Source:							
Coarse Aggregate 3/4"			Absorption 0.70	Specific Gravity	2.930	1769	lb/cy	9.68 cf
704.02B	Source:	LEBANON CRUSHED STONE - W LEBANON, NH						
Coarse Aggregate 1 1/2"			Absorption	Specific Gravity			lb/cy	0.00 cf
704.02C	Source:							
Fine Aggregate:			Absorption 1.40	Specific Gravity	2.700	1280	lb/cy	7.60 cf
704.01	Source:	LEBANON CRUSHED STONE - W LEBANON, N		Fineness Modulus	2.78			
Air Entrainment Admixture				Specific Gravity		1	oz/cy	
725.02(b)	Source:	MASTER BUILDERS INC - MESQUITE, TX						
	Brand Name:	MasterAir AE 200/MicroAir						
Retarder Admixture:				Specific Gravity		0.5	oz/cwt	
725.02(c)	Source:	MASTER BUILDERS INC - MESQUITE, TX						
	Brand Name:	MasterSet R100						
High Range Water Reducer Admixture:				Specific Gravity		4	oz/cwt	
725.02(h)	Source:	MASTER BUILDERS INC - MESQUITE, TX						
	Brand Name:	MasterGlenium 7500						
Other Admixtures:								
				Specific Gravity			gal/cy	0.00 cf
	Source:							
	Brand Name:							
				Specific Gravity			oz/cwt	0.00 cf
	Source:							
	Brand Name:							
				Specific Gravity				0.00 cf
	Source:							
	Brand Name:							
				TOTAL	47.610	3976	lb	27.00 cf

Maximum Water/Cementitious Ratio	0.42			
Maximum Water (gal/cy)	33.5			
Slump Min/Max (inch)	4.0	min	8.0	max
Air Content Min/Max (%)	5.0	min	9.0	max
Design Unit Wt. (lb/cf)	147.26			

Notes:

Contractor fabricated precast concrete structures, 2015 Construction season, 2-24-15