CONSTRUCTION LEADERS

LETTER OF TRANSMITTAL			
DATE:	**March 27, 2015**	PCL JOB NO:	**5515002**
ATTN:	**Chris Barker**	TRANSMITTAL NO:	**048**

To: **State of Vermont Agency of Transportation**
One National Life Drive

(802) 828-0053

Re: Hartford Lateral Slide
Project No.: IM 091-2(79)
Contract ID.: 12A132 County: Windsor PCL FILE NO: 5515002-32

WE ARE SENDING X Attached ____ Under separate cover via **Email & SP** the following:
____ Shop drawings ____ Prints X Plans ____ Samples X Specifications
____ Copy of Letter ____ Change Order ____ Other

COPIES	SPEC.	REVISION	DESCRIPTION
1	**707.03, Bearing Note 9**		**Bearing Anchor Block Out and Mortaring Proposal**

TRANSMITTED for as checked below:

X For approval ____ Approved as submitted ____ Resubmit 1 Copies for approval
____ For your use ____ Approved as noted ____ Submit ____ Copies for distribution
____ As requested ____ Returned for corrections ____ Return ____ Corrected prints
____ For review and comment

Remarks:

Please return an email of this approved submittal to Erich Heymann (ewheymann@pcl.com) and Jeremy Mackling (jmackling@pcl.com).

We request the review and return of this submittal within 14 days. Please advise if this request cannot be met so we can plan accordingly.

By: **Erich Heymann,** Project Engineer

COPY TO: Project Files

3810 Northdale Blvd., Suite 200; Tampa, FL • (813) 264-9500 • (813) 264-6689 (fax)

CONSTRUCTION LEADERS

SUBMITTAL NO. : 32
Bearing Anchor Block Out and Mortaring Proposal

Item No.	Specification	Description
1	707.03, Bearing Note 9	Bearing Anchor Block Out and Mortaring Proposal

PROJECT:
HARTFORD LATERAL SLIDE
PROJECT NO.: IM 091-2(79)
CONTRACT ID.: 12A132

OWNER:
STATE OF VERMONT AGENCY OF TRANSPORTATION

ENGINEER OF RECORD:
STATE OF VERMONT AGENCY OF TRANSPORTATION

CONTRACTOR:
PCL CIVIL CONSTRUCTORS, INC.

MARCH 27, 2015

3810 Northdale Blvd., Suite 200; Tampa, FL • (813) 264-9500 • (813) 264-6689 (fax)

Bearing Anchor Block Out and Mortaring Proposal

Project Name: Hartford / VAOT
Project Number: IM 091-2(79)

PART 1 GENERAL

1.1 SUMMARY

The intent of this submittal is to fulfill the contract requirement per Sheet 95 of 166 – Bearing Note (9). PCL Civil Constructors, Inc. proposes the use of "Sika 212" to be used for the anchor bolt for the bearing and filling the recess of the blockout. This product is approved under the VAOT APL Section 707.03 – Mortar, Type IV.

1.2 RELATED CONTRACT DOCUMENTS

A. Contract Drawings: Sheets 95 and 96 of 166

B. Project Specifications: Section 900 Special Provision Items, items 47 thru 55

C. Project Specifications: Item 144 (b)

1.2 ANCHOR BOLT and BLOCK OUT DETAIL

A. For dimensions refer to Sheet 95 of 166. Anchor Bolt Dia.a is 1½"

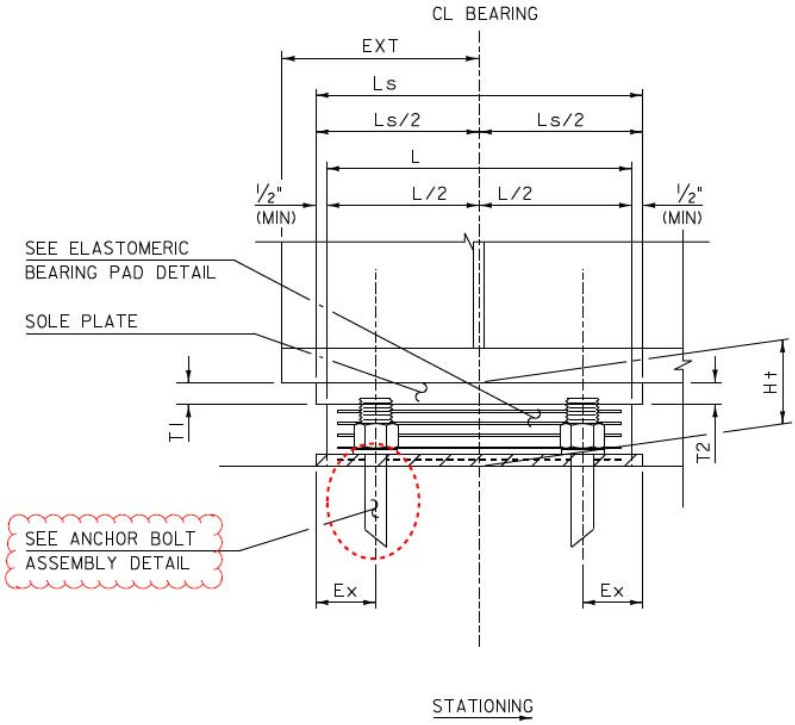

EXPANSION BEARING TYPICAL SECTION
(NTS)

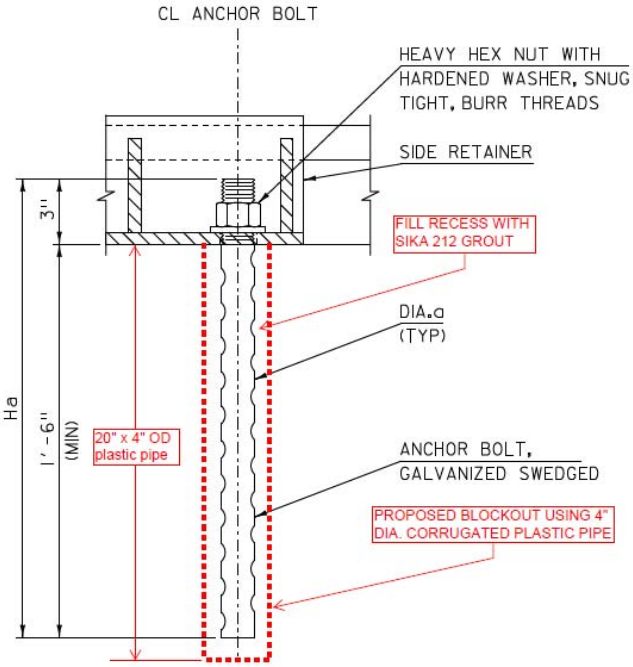

ANCHOR BOLT ASSEMBLY DETAIL
(NTS)

PART 2 PRODUCTS

2.1 MATERIAL

For material information refer to the following attached files for Sika 212 grout.

A. Sika 212 Product manufacturer's Technical Data Sheet

B. Sika 212 Product manufacturer's Material Safety Data Sheets (MSDS)

C. 4" Corrugated PVC Pipe

2.2 PRODUCT QUALITY ASSURANCE

A. Please refer to attached Technical Data Sheets.

2.3 DELIVERY, STORAGE, AND HANDLING

A. The delivery of materials to jobsite will be in original, unopened, undamaged containers that clearly show the manufacturer's name, product name, and batch number.

B. Materials is to be stored by PCL in a dry area off the ground protected from rain, snow, and other sources of moisture.

Grout

PART 3 BLOCK OUT PROCEDURE

3.1 SURFACE CONDITION AND PREPARATION

A. Rather than drilling into the new concrete, PCL proposes using the blockout method to recess the anchor for the bearing angles as shown in section 1.2 – BEARING ANCHOR DETAIL of this submittal.

B. Prior to pouring the pier cap, a piece of 20" x 4" Dia. corrugated pvc pipe will be installed.

C. The pipe will be secured in place using tie wires to ensure no movement during pour.

PART 4 MORTARING PROCEDURE

4.1 SURFACE PREPARATION

A. The surface will be prepared per Bearing Note (10), Sheet 95 of 166, that reads:
"The drilled holes to be mortared shall be thoroughly cleaned, wetted, and free of standing water." However, in this case, rather than a drilled hole, it would be a cast-in-place blockout as mentioned in Part 3.

B. Manufacturer's recommendation will also be followed which reads:
"Remove all dirt, oil, grease, and other bond-inhibiting materials by mechanical means."
"Prior to pouring, surface should be brought to a saturated surface-dry condition."

4.2 MIXING

A. Personnel, Material, and Equipment will be organized prior to starting the operation

B. Per Bearing Note (11), Sheet 95 of 166, the mortar will be mixed mechanically per manufacturer's recommendation

C. Manufacturer recommends mixing with a low-speed drill at 400-600 rpm and Sika mixing paddle or in appropriately sized mortar mixer.

D. Material will be mixed to uniform consistency for a minimum of 2 minutes.

4.3 PLACEMENT

A. The placement of the mortar will be per Bearing Note (11), Sheet 95 of 166, that reads: “readily pourable so that when poured it completely fills the remaining hole cavities. The placement of mortar for each bearing shall be continuous and complete at all hole locations.”

B. The material will be placed within 15 minutes after mixing

C. It will be placed in normal manner to avoid air entrapment. A tube will also be coming off the anchor hole in order to release air and ensure the anchor hole is fully filed with the anchoring material.

D. The final layer shall be troweled smooth with the face of the pedestal.

4.4 CURING

A. The curing of the mortar will be per Bearing Note (12), Sheet 95 of 166, that reads: “All exposed mortar shall be cured for a period of not less than three (3) days by the wetted burlap method in accordance with Section 501. Curing shall commence as soon as practical after mortar placement. The Contractor shall not apply any forces to the bearing retainers during the curing period.” This is also what is recommended by the manufacturer.

B. Per Bearing Note (13) the temperature setting table is included in the first sheet of the attached Sika 212 Technical Data Sheet as follows:

Typical Data ***(Material and curing conditions @ 73°F (23°C) and 50% R.H.)***

RESULTS MAY DIFFER BASED UPON STATISTICAL VARIATIONS DEPENDING UPON MIXING METHODS AND EQUIPMENT, TEMPERATURE, APPLICATION METHODS, TEST METHODS, ACTUAL SITE CONDITIONS AND CURING CONDITIONS.

Shelf Life		One year in original, unopened bags.		
Storage Conditions		Store dry at 40°-95°F (4°-35°C). Condition material to 65°-75°F before using.		
Color		Concrete gray		
Flow Conditions (ASTM C-109, Plastic & Flowable; ASTM C-939, Fluid)		**Plastic[1]**	**Flowable[1]**	**Fluid[2]**
Typical Water Requirements:		6 pt.+	6.5 pt.	8.5 pt.
Set Time (ASTM C-266):	**Initial**	3.5-4.5 hr.	4.0-5.0 hr.	4.5-6.5 hr.
	Final	4.5-5.5 hr.	5.5-6.5 hr.	6.0-8.0 hr.
Tensile Splitting Strength, psi (ASTM C-496)				
	28 day	600 (4.1 MPa)	575 (3.9 MPa)	500 (3.4 MPa)
Flexural Strength, psi (ASTM C-293)				
	28 day	1,400 (9.6 MPa)	1,200 (8.2 MPa)	1,000 (6.8 MPa)
Bond Strength, psi (ASTM C-882 modified): Hardened concrete to plastic grout				
	28 day	2,000 (13.7 MPa)	1,900 (13.1 MPa)	1,900 (13.1 MPa)
Expansion % (CRD C-621)	**28 day**	+0.021%	+0.056%	+0.027%
Compressive Strength, psi (CRD C-621)				
	1 day	4,500 (31 MPa)	3,500 (24.1 MPa)	2,700 (18.6 MPa)
	7 day	6,100 (42 MPa)	5,700 (39.3 MPa)	5,500 (37.9 MPa)
	28 day	7,500 (51.7 MPa)	6,200 (42.7 MPa)	5,800 (40 MPa)

[1]CRD C-227: 100-124% (plastic), 124-145% (flowable)

[2]CRD C-611: 10-30 sec efflux time.

4.5 QUALITY CONTROL TESTING

A. Testing will be completed per Project Specific Special Provisions Section 114 (a) in accordance with AASHTO T 106 (ASTM C 109).

4.6 CLEAN UP

A. Clean mixer immediately after use or add mix water and begin mixing immediately for the next batch. Do not allow buildup of hardened repair material in the mixer, since this creates inefficient mixing and the heat generated accelerates later batches.

B. Clean all tools immediately after use.

C. Clean excess material from surrounding areas immediately.

Construction

SikaGrout® 212

High performance, cementitious grout

Description	SikaGrout® 212 is a non-shrink, cementitious grout with a unique 2-stage shrinkage compensating mechanism. It is non-metallic and contains no chloride. With a special blend of shrinkage-reducing and plasticizing/water-reducing agents, SikaGrout® 212 compensates for shrinkage in both the plastic and hardened states. A structural grout, SikaGrout® 212 provides the advantage of multiple fluidity with a single component. SikaGrout ® 212 meets ASTM C-1107 (Grade C).
Where to Use	▪ Use for structural grouting of column base plates, machine base plates, anchor rods, bearing plates, etc. ▪ Use on grade, above and below grade, indoors and out. ▪ Multiple fluidity allows ease of placement: ram in place as a dry pack, trowel-apply as a medium flow, pour or pump as high flow.
Advantages	▪ Easy to use, just add water. ▪ Multiple fluidity with one material. ▪ Non-metallic, will not stain or rust. ▪ Low heat build-up. ▪ Excellent for pumping: Does not segregate, even at high flow. No build-up on equipment hopper ▪ Superior freeze/thaw resistance. ▪ Resistant to oil and water. ▪ Meets ASTM C-1107 (Grade C). ▪ Shows positive expansion when tested in accordance with ASTM C-827. ▪ SikaGrout® 212 is USDA-approved.
Coverage	Approximately 0.44 cu. ft./bag at high flow.
Packaging	50-lb. multi-wall bags; 36 bags/pallet

Typical Data *(Material and curing conditions @ 73°F (23°C) and 50% R.H.)*

RESULTS MAY DIFFER BASED UPON STATISTICAL VARIATIONS DEPENDING UPON MIXING METHODS AND EQUIPMENT, TEMPERATURE, APPLICATION METHODS, TEST METHODS, ACTUAL SITE CONDITIONS AND CURING CONDITIONS.

Shelf Life	One year in original, unopened bags.
Storage Conditions	Store dry at 40°-95°F (4°-35°C). Condition material to 65°-75°F before using.
Color	Concrete gray

Flow Conditions (ASTM C-109, Plastic & Flowable; ASTM C-939, Fluid)		**Plastic[1]**	**Flowable[1]**	**Fluid[2]**
Typical Water Requirements:		6 pt.+	6.5 pt.	8.5 pt.
Set Time (ASTM C-266):	**Initial**	3.5-4.5 hr.	4.0-5.0 hr.	4.5-6.5 hr.
	Final	4.5-5.5 hr.	5.5-6.5 hr.	6.0-8.0 hr.
Tensile Splitting Strength, psi (ASTM C-496)				
	28 day	600 (4.1 MPa)	575 (3.9 MPa)	500 (3.4 MPa)
Flexural Strength, psi (ASTM C-293)				
	28 day	1,400 (9.6 MPa)	1,200 (8.2 MPa)	1,000 (6.8 MPa)
Bond Strength, psi (ASTM C-882 modified): Hardened concrete to plastic grout				
	28 day	2,000 (13.7 MPa)	1,900 (13.1 MPa)	1,900 (13.1 MPa)
Expansion % (CRD C-621)	**28 day**	+0.021%	+0.056%	+0.027%
Compressive Strength, psi (CRD C-621)				
	1 day	4,500 (31 MPa)	3,500 (24.1 MPa)	2,700 (18.6 MPa)
	7 day	6,100 (42 MPa)	5,700 (39.3 MPa)	5,500 (37.9 MPa)
	28 day	7,500 (51.7 MPa)	6,200 (42.7 MPa)	5,800 (40 MPa)

[1]CRD C-227: 100-124% (plastic), 124-145% (flowable)

[2]CRD C-611: 10-30 sec efflux time.

PRIOR TO EACH USE OF ANY SIKA PRODUCT, THE USER MUST ALWAYS READ AND FOLLOW THE WARNINGS AND INSTRUCTIONS ON THE PRODUCT'S MOST CURRENT PRODUCT DATA SHEET, PRODUCT LABEL AND SAFETY DATA SHEET WHICH ARE AVAILABLE ONLINE AT HTTP://USA.SIKA.COM/ OR BY CALLING SIKA'S TECHNICAL SERVICE DEPARTMENT AT 800.933.7452 NOTHING CONTAINED IN ANY SIKA MATERIALS RELIEVES THE USER OF THE OBLIGATION TO READ AND FOLLOW THE WARNINGS AND INSTRUCTIONS FOR EACH SIKA PRODUCT AS SET FORTH IN THE CURRENT PRODUCT DATA SHEET, PRODUCT LABEL AND SAFETY DATA SHEET PRIOR TO PRODUCT USE.

Construction

How to Use

Surface Preparation

Remove all dirt, oil, grease, and other bond-inhibiting materials by mechanical means. Anchor bolts to be grouted must be de-greased with suitable solvent. Concrete must be sound and roughened to a CSP 4 or higher to promote mechanical adhesion. Prior to pouring, surface should be brought to a saturated surface-dry condition. Steel should be cleaned and prepared thoroughly by blastcleaning to a white metal finish. Follow standard industry and Sika guidelines for use as an anchoring epoxy.

For pourable grout, construct forms to retain grout without leakage. Forms should be lined or coated with bond-breaker for easy removal. Forms should be sufficiently high to accommodate head of grout. Where grout-tight form is difficult to achieve, use SikaGrout® 212 in dry pack consistency.

Mixing

Mix manually or mechanically. Mechanically mix with low-speed drill (400-600 rpm) and Sika mixing paddle or in appropriately sized mortar mixer.

Make sure all forming, mixing, placing, and clean-up materials are on hand. Add appropriate quantity of clean water to achieve desired flow. Add bag of powder to mixing vessel. Mix to a uniform consistency, minimum of 2 minutes. Ambient and material temperature should be as close as possible to 70°F If higher, use cold water; if colder, use warm water.

Product Extension: For deeper applications, SikaGrout® 212 (plastic and flowable consistencies only) may be extended with 25 lbs. of 3/8" pea gravel. The aggregate must be nonreactive, clean, well-graded, saturated surface dry, have low absorption and high density, and comply with ASTM C33 size number 8 per Table 2. Add the pea gravel after the water and SikaGrout® 212.

Application

Within 15 minutes after mixing, place grout into forms in normal manner to avoid air entrapment. Vibrate, pump, or ram grout as necessary to achieve flow or compaction. SikaGrout® 212 must be confined in either the horizontal or vertical direction leaving minimum exposed surface. SikaGrout® 212 is an excellent grout for pumping, even at high flow. For pump recommendations, contact Technical Service. Wet cure for a minimum of 3 days or apply a curing compound which complies with ASTM C-309 on exposed surfaces.

Tooling & Finishing

After grout has achieved final set, remove forms, trim or shape exposed grout shoulders to designed profile

Limitations

- Minimum ambient and substrate temperature 45°F and rising at time of application.
- Minimum application thickness: 1/2 in.
- Maximum application thickness (neat): 2 in. However, thicker applications can be achieved. Contact Sika's Technical Services Department (800-933-7452) for further information.
- Do not use as a patching or overlay mortar or in unconfined areas.
- Material must be placed within 15 minutes of mixing.
- As with all cement based materials, avoid contact with aluminum to prevent adverse chemical reaction and possible product failure. Insulate potential areas of contact by coating aluminum bars, rails, posts etc. with an appropriate epoxy such as Sikadur® Hi-Mod 32.

PRIOR TO EACH USE OF ANY SIKA PRODUCT, THE USER MUST ALWAYS READ AND FOLLOW THE WARNINGS AND INSTRUCTIONS ON THE PRODUCT'S MOST CURRENT PRODUCT DATA SHEET, PRODUCT LABEL AND SAFETY DATA SHEET WHICH ARE AVAILABLE ONLINE AT HTTP://USA.SIKA.COM/ OR BY CALLING SIKA'S TECHNICAL SERVICE DEPARTMENT AT 800.933.7452 NOTHING CONTAINED IN ANY SIKA MATERIALS RELIEVES THE USER OF THE OBLIGATION TO READ AND FOLLOW THE WARNINGS AND INSTRUCTIONS FOR EACH SIKA PRODUCT AS SET FORTH IN THE CURRENT PRODUCT DATA SHEET, PRODUCT LABEL AND SAFETY DATA SHEET PRIOR TO PRODUCT USE.

KEEP CONTAINER TIGHTLY CLOSED. KEEP OUT OF REACH OF CHILDREN. NOT FOR INTERNAL CONSUMPTION. FOR INDUSTRIAL USE ONLY. FOR PROFESSIONAL USE ONLY.

For further information and advice regarding transportation, handling, storage and disposal of chemical products, users should refer to the actual Safety Data Sheets containing physical, ecological, toxicological and other safety related data. Read the current actual Safety Data Sheet before using the product. In case of emergency, call CHEMTREC at 1-800-424-9300, International 703-527-3887.

Prior to each use of any Sika product, the user must always read and follow the warnings and instructions on the product's most current Product Data Sheet, product label and Safety Data Sheet which are available online at http://usa.sika.com/ or by calling Sika's Technical Service Department at 800-933-7452. Nothing contained in any Sika materials relieves the user of the obligation to read and follow the warnings and instruction for each Sika product as set forth in the current Product Data Sheet, product label and Safety Data Sheet prior to product use.

SIKA warrants this product for one year from date of installation to be free from manufacturing defects and to meet the technical properties on the current Product Data Sheet if used as directed within shelf life. User determines suitability of product for intended use and assumes all risks. Buyer's sole remedy shall be limited to the purchase price or replacement of product exclusive of labor or cost of labor. NO OTHER WARRANTIES EXPRESS OR IMPLIED SHALL APPLY INCLUDING ANY WARRANTY OF MERCHANTABILITY OR FITNESS FOR A PARTICULAR PURPOSE. SIKA SHALL NOT BE LIABLE UNDER ANY LEGAL THEORY FOR SPECIAL OR CONSEQUENTIAL DAMAGES. SIKA SHALL NOT BE RESPONSIBLE FOR THE USE OF THIS PRODUCT IN A MANNER TO INFRINGE ON ANY PATENT OR ANY OTHER INTELLECTUAL PROPERTY RIGHTS HELD BY OTHERS. SALE OF SIKA PRODUCTS ARE SUBJECT SIKA'S TERMS AND CONDITIONS OF SALE AVAILABLE AT HTTP://USA.SIKA.COM/ OR BY CALLING 201-933-8800.

Visit our website at usa.sika.com **1-800-933-SIKA NATIONWIDE**

Regional Information and Sales Centers. For the location of your nearest Sika sales office, contact your regional center.

Sika Corporation
201 Polito Avenue
Lyndhurst, NJ 07071
Phone: 800-933-7452
Fax: 201-933-6225

Sika Canada Inc.
601 Delmar Avenue
Pointe Claire
Quebec H9R 4A9
Phone: 514-697-2610
Fax: 514-694-2792

Sika Mexicana S.A. de C.V.
Carretera Libre Celaya Km. 8.5
Fracc. Industrial Balvanera
Corregidora, Queretaro
C.P. 76920
Phone: 52 442 2385800
Fax: 52 442 2250537

Sika and SikaGrout are registered trademarks.
Printed in Canada.

1. Product and company identification

Product name	SikaGrout®-212
Supplier	Sika Corporation 201 Polito Avenue Lyndhurst, NJ 07071
Telephone	(201) 933-8800
Telefax	(201) 804-1076
Emergency telephone	CHEMTREC: 800-424-9300 INTERNATIONAL: 703-527-3887
e-mail address of person responsible for this SDS	ehs@sika-corp.com
Manufacturer	Sika Corporation, Operations 201 Polito Avenue Lyndhurst, NJ 07071 www.sikausa.com
Telephone	(201) 933 - 8800
Chemical family	Cementitious Grout

2. Hazards identification

This material is hazardous under the criteria of the Federal OSHA Hazard Communication Standard 29CFR 1910.1200.

Potential Health Effects

Inhalation	Causes respiratory tract irritation.
Skin	Causes skin irritation.
Eyes	May cause eye injury - effects may be delayed. Causes severe eye irritation.
Ingestion	Harmful if swallowed.
Warning	Contains material that may cause target organ damage. Possible cancer hazard. Contains material which may cause cancer based on animal data.

See Section 11 for more detailed information on health effects and symptoms.

3. Composition/information on ingredients

Component	CAS Number
quartz (SiO2)	14808-60-7
portland cement	65997-15-1

There are no additional ingredients present which, within the current knowledge of the supplier and in the concentrations applicable, are classified as hazardous to health or the environment and hence require reporting in this section.

4. First aid measures

First aid procedures

Inhalation	If inhaled, remove to fresh air. If breathing is difficult, trained personnel should give oxygen. Get medical attention.
Skin contact	In case of contact, immediately flush skin with plenty of water. Remove contaminated clothing and shoes. Wash clothing before reuse. Get medical attention immediately if irritation develops and persists.
Eye contact	If easy to do, remove contact lens, if worn. In case of contact, immediately flush eyes with plenty of water for at least 15 minutes. Get medical attention.
Ingestion	If swallowed, contact a poison control center or physician immediately. Do NOT induce vomiting unless directed to do so by medical personnel Never give anything by mouth to an unconscious person. Get medical attention immediately.

Notes to physician

Treatment	No specific treatment. Treat symptomatically. Contact poison treatment specialist immediately if large quantities have been ingested or inhaled.

5. Fire-fighting measures

Fire fighting

Suitable extinguishing media	Use water spray, alcohol-resistant foam, dry chemical or carbon dioxide.
Unsuitable extinguishing media	none
Further information	Collect contaminated fire extinguishing water separately. This must not be discharged into drains. Fire residues and contaminated fire extinguishing water must be disposed of in accordance with local regulations. Promptly isolate the scene by removing all persons from the vicinity of the incident if there is a fire. No action shall be taken involving any personal risk without suitable training.

Protective equipment and precautions for firefighters

Special protective equipment for firefighters	Firefighters should wear appropriate protective equipment and self-contained breathing apparatus (SCBA) with a full face-piece operated in positive pressure mode.

6. Accidental release measures

Personal precautions	Use personal protective equipment.

	Ensure adequate ventilation. Evacuate personnel to safe areas. No action shall be taken involving any personal risk without suitable training. Keep people away from and upwind of spill/leak. Avoid breathing dust/ fume/ gas/ mist/ vapors/ spray.
Environmental precautions	Local authorities should be advised if significant spillages cannot be contained. Avoid dispersal of spilled material and runoff and contact with soil, waterways, drains and sewers.
Methods for containment and cleaning up	Sweep up and shovel into suitable containers for disposal. Minimize dust generation and accumulation.

7. Handling and storage

Handling	For personal protection see section 8. Avoid inhalation, ingestion and contact with skin and eyes. Smoking, eating and drinking should be prohibited in the application area.
Storage	Keep containers tightly closed in a dry, cool and well-ventilated place. Keep in properly labeled containers. To maintain product quality, do not store in heat or direct sunlight. Store in accordance with local regulations.

8. Exposure controls/personal protection

Exposure limit(s)

Component	CAS Number	Content %	Basis *	Value	Exposure limit(s) / Form of exposure
quartz (SiO2)	14808-60-7	60 - 100	ACGIH	TWA	0.025 mg/m3 Respirable fraction
		60 - 100	OSHA P0	TWA	0.1 mg/m3 Respirable fraction
portland cement	65997-15-1	30 - 60	ACGIH	TWA	1 mg/m3 Respirable fraction
		30 - 60	OSHA Z3	TWA	50 million particles per cubic foot
		30 - 60	OSHA P0	TWA	10 mg/m3 Total
		30 - 60	OSHA P0	TWA	5 mg/m3 Respirable fraction

* **Basis**
ACGIH. Threshold Limit Values (TLV)
OSHA P0. Table Z-1, Limit for Air Contaminat (1989 Vacated Values)
OSHA P1. Permissible Exposure Limits (PEL), Table Z-1, Limit for Air Contaminant
OSHA P2. Permissible Exposure Limits (PEL), Table Z-2
OSHA Z3. Table Z-3, Mineral Dust

Engineering measures	Use of adequate ventilation should be sufficient to control worker exposure to airborne contaminants. If the use of this product generates dust, fumes, gas, vapor or mist, use process enclosures, local exhaust ventilation or other engineering controls to keep worker exposure below any recommended or statutory limits. The engineering controls also need to keep gas, vapor or dust concentrations below any lower explosive limits.

Personal protective equipment

Eye protection	Safety eyewear complying with an approved standard should be used when a risk assessment indicates this is necessary.
Hand protection	Chemical-resistant, impervious gloves complying with an approved standard should be worn at all times when handling chemical products if a risk assessment indicates this is necessary.
Skin and body protection	Choose body protection according to the amount and concentration of the dangerous substance at the work place.
Respiratory protection	Use a properly fitted, air-purifying or air-fed respirator complying with an approved standard if a risk assessment indicates this is necessary. The filter class for the respirator must be suitable for the maximum expected contaminant concentration (gas/vapor/aerosol/particulates) that may arise when handling the product. If this concentration is exceeded, self-contained breathing apparatus must be used.
Hygiene measures	Avoid contact with skin, eyes and clothing. Handle in accordance with good industrial hygiene and safety practice. Wash hands before breaks and immediately after handling the product. Remove contaminated clothing and protective equipment before entering eating areas. Wash thoroughly after handling.
Other information	Table Z3. Quartz (SiO2) <5@m TWA: 10 mg/m³ 8 hour(s). Form: Respirable TWA: 250 mppcf 8 hour(s). Form: Respirable TWA: 30 mg/m³ 8 hour(s). Form: Total dust Table Z1. Cement TWA: 15 mg/m³ 8 hour(s). Form: Total dust TWA: 5 mg/m³ 8 hour(s). Form: Respirable

9. Physical and chemical properties

Appearance

Form	powder

Color	gray

Safety data

Flash point	> 199.9 °F (> 93.3 °C)
Density	3 g/cm3 at 68 °F (20 °C)
Viscosity, kinematic	> 7 mm2/s at 104 °F (40 °C)

10. Stability and reactivity

Stability	Stable under normal conditions.
Conditions to avoid	not applicable
Materials to avoid	not applicable
Hazardous decomposition products	Under normal conditions of storage and use, hazardous decomposition products should not be produced.

11. Toxicological information

Chronic Exposure	Prolonged exposure can cause silicosis.
Target Organs	Lungs

Carcinogenicity

IARC	Group 1: Carcinogenic to humans	
	quartz (SiO2)	14808-60-7
OSHA	not applicable	
NTP	not applicable	
ACGIH	Suspected human carcinogen: Human data are accepted as adequate in quality but are conflicting or insufficient to classify the agent as a confirmed human carcinogen; OR, the agent is carcinogenic in experimental animals at dose(s), by route(s) of exposure, at site(s), of histologic type(s), or by mechanism(s) considered relevant to worker exposure. The A2 is used primarily when there is limited evidence of carcinogenicity in humans and sufficient evidence of carcinogenicity in experimental animals with relevance to humans.	
	quartz (SiO2)	14808-60-7

12. Ecological information

Other information	Do not empty into drains; dispose of this material and its container in a safe way.

13. Disposal considerations

Waste disposal methods	Disposal of this product, solutions and any by-products should at all times comply with the requirements of environmental protection and waste disposal legislation and any regional local authority requirements.
Packaging	Empty containers should be taken to an approved waste handling site for recycling or disposal.

14. Transport information

DOT
Not dangerous goods
IATA
Not dangerous goods
IMDG
Not dangerous goods

15. Regulatory information

Federal Regulations

TSCA Status	On TSCA Inventory
SARA 311/312 Hazards	Acute Health Hazard Chronic Health Hazard

EPCRA - Emergency Planning Community Right - To - Know

SARA 302 Ingredients	not applicable
SARA 313 Ingredients	not applicable

Clean Air Act

Ozone-Depletion Potential	This product neither contains, nor was manufactured with a Class I or Class II ODS as defined by the U.S. Clean Air Act Section 602 (40 CFR 82, Subpt. A, App.A + B).

This product does not contain any hazardous air pollutants (HAP), as defined by the U.S. Clean Air Act Section 12 (40 CFR 61).

This product does not contain any chemicals listed under the U.S. Clean Air Act Section 112(r) for Accidental Release Prevention (40 CFR 68.130, Subpart F).

State Regulations

California Prop. 65 Ingredients	WARNING! This product contains a chemical known in the State of California to cause cancer.

16. Other information

HMIS Classification

Health	*	2
Flammability		1
Physical Hazard		0
Personal Protection		E

NFPA Classification

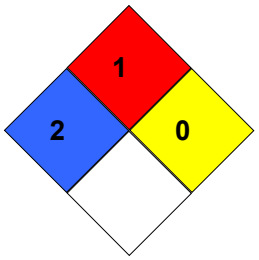

Caution: HMIS®' ratings and NFPA ratings are based on a 0-4 rating scale, with 0 representing minimal hazards or risks, and 4 representing significant hazards or risks. Although HMIS®' and NFPA ratings are not required on MSDSs under 29 CFR 1910.1200, the preparer may choose to provide them. HMIS®' and NFPA ratings are to be used with a fully implemented HMIS®' and NFPA program. HMIS®' is a registered mark of the National Paint & Coatings Association (NPCA). NFPA or the National Fire Protection Association is a private non-profit organization and an authoritative source of technical background, data, and consumer advice on fire protection, problems and prevention. Please note HMIS®' attempts to convey full health warning information to all employees while NFPA is meant primarily for fire fighters and other emergency responders.

Notes to Reader

The information contained in this Material Safety Data Sheet applies only to the actual Sika Corporation ("Sika") product identified and described herein. This information is not intended to address, nor does it address the use or application of the identified Sika product in combination with any other material, product or process. All of the information set forth herein is based on technical data regarding the identified product that Sika believes to be reliable as of the date hereof. Prior to each use of any Sika product, the user must always read and follow the warnings and instructions on the product's current Technical Data Sheet, product label and Material Safety Data Sheet for each Sika product, which are available at web site and/or telephone number listed in Section 1 of this MSDS.

SIKA MAKES NO WARRANTIES EXPRESS OR IMPLIED AND ASSUMES NO LIABILITY ARISING FROM THIS INFORMATION OR ITS USE. SIKA SHALL NOT BE LIABLE UNDER ANY LEGAL THEORY FOR SPECIAL OR CONSEQUENTIAL DAMAGES AND SHALL NOT BE RESPONSIBLE FOR THE USE OF THIS PRODUCT IN A MANNER TO INFRINGE ON ANY PATENT OR ANY OTHER INTELLECTUAL PROPERTY RIGHTS HELD BY OTHERS.

All sales of Sika products are subject to its current terms and conditions of sale available at www.sikausa.com or 201-933-8800.