MILLER CONSTRUCTION, INC.

P.O. BOX 86 ASCUTNEY BLVD WINDSOR, VERMONT 05089-0086
TELEPHONE (802) 674-5525 / FAX (802) 674-5245

TRANSMITTAL

TO: Rob Young, PE Project Manager Vermont Agency of Transportation	DATE	PROJECT NO.
	1/7/2016	Woodstock BRF 0151 (21)

XX WE ENCLOSE THE FOLLOWING: _____ UNDER SEPARATE COVER WE ARE SENDING THE FOLLOWING

COPIES	NUMBER	DESCRIPTION	CODE
1		Bridge Rail Sheets 1 - 4 - Rev 1	H
1		Bridge Rail WPS 3008 & 3009 - Rev 1	H
1		Rail Transitions Sheets 1 - 5 - Rev 1	H
1		Rail WPS 3007, 3009, 3016, & 3022 - Rev 1	H

CODE:

A FOR INITIAL APPROVAL
B FOR FINAL APPROVAL
C APPROVED AS NOTED-RESUBMISSION REQUIRED
D APPROVED AS NOTED-RESUBMISSION NOT REQUIRED
E DISAPPROVED-RESUBMIT
F QUOTATION REQUESTED
G APPROVED
H FOR APPROVAL
I AS REQUESTED OR REQUIRED
J FOR USE IN ERECTION
K LETTER FOLLOWS
L FOR FIELD CHECK
M FOR YOUR USE

BY: Paul [illegible]

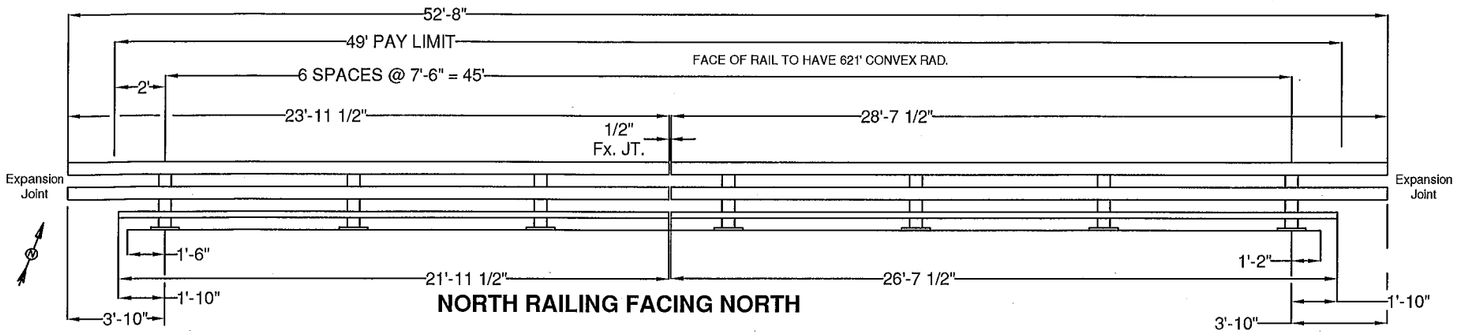

NORTH RAILING FACING NORTH

RAIL BENDING PROCEDURE:
RADII EQUAL OR GREATER THAN 16' TO BE CURVED ON A TUBE BENDING MACHINE, RADII LESS THAN 16' TO BE 'PIE CUT' AND WELDED.

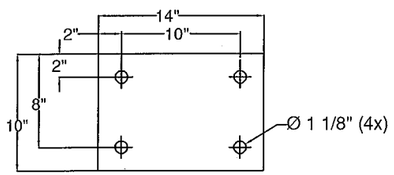

1/8" FABRIC PAD

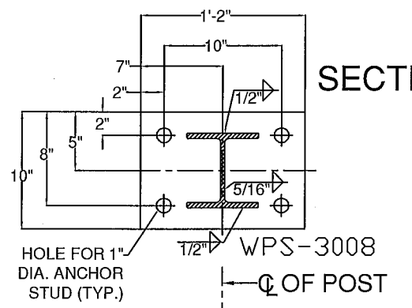

SECTION A-A

WPS-3008

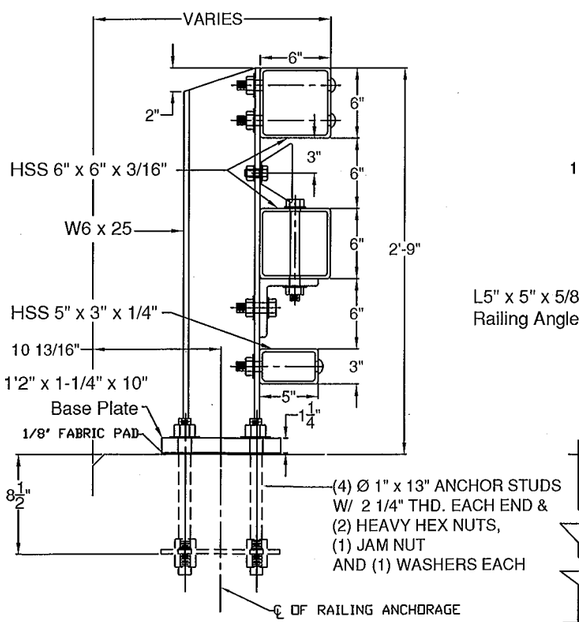

SECTION

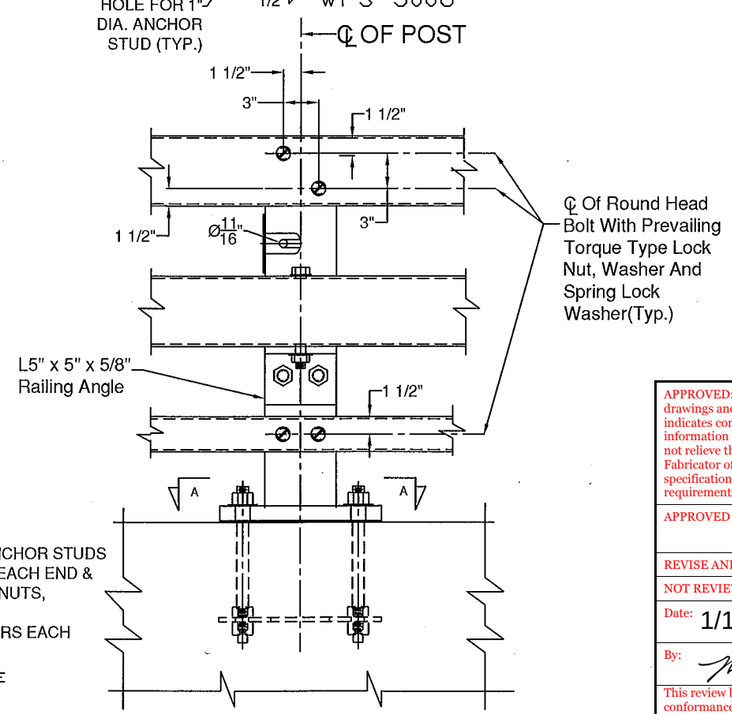

ELEVATION

STEEL BRIDGE RAILING

BILL OF MATERIAL

ITEM #	QTY	PART #	DESCRIPTION	ASTM DESIGNATION
1	14	0033.03610	W6x25, THREE RAIL POST @ 2'-9" OA ON 1 1/4x10x1'-2" B.P.	A572 Gr. 50
2	1	T.B.D.	HSS 3" X 5" X 1/4" RAIL @ 21'-11 1/2" W/ 621' CONVEX R.	A500 Gr. B
3	1	T.B.D.	HSS 3" X 5" X 1/4" RAIL @ 26'-7 1/2" W/ 621' CONVEX R.	A500 Gr. B
2	1	T.B.D.	HSS 3" X 5" X 1/4" RAIL @ 20'-11 1/2" W/ 651' CONCAVE R.	A500 Gr. B
3	1	T.B.D.	HSS 3" X 5" X 1/4" RAIL @ 25'-7 1/2" W/ 651' CONCAVE R.	A500 Gr. B
5	2	T.B.D.	HSS 6" X 6" X 3/16" RAIL @ 23'-11 1/2" W/ 621' CONVEX R.	A500 Gr. B
6	2	T.B.D.	HSS 6" X 6" X 3/16" RAIL @ 28'-7 1/2" W/ 621' CONVEX R.	A500 Gr. B
5	2	T.B.D.	HSS 6" X 6" X 3/16" RAIL @ 22'-11 1/2" W/ 651' CONCAVE R.	A500 Gr. B
6	2	T.B.D.	HSS 6" X 6" X 3/16" RAIL @ 27'-7 1/2" W/ 651' CONCAVE R.	A500 Gr. B
8	2	0033.00840	2-1/8" X 4-1/4" FIX. SPLICE BAR @ 2'-3"	A572 Gr. 50
9	4	0033.00640	HSS 5" X 5" X 5/16" FIX. SPLICE TUBE @ 2'-3"	A500 Gr. B, A572 Gr. 50
10	14	0033.00220	3/8" X 10" X 14" ANCHOR PLATES	A572 Gr. 50
11	14	0033.90050	1/8" X 10" X 14" FABRIC PAD	AASHTO M251
12	58*	0042.21013	Ø 1" X 13" ANCHOR STUDS, W/ 2 1/4" THD. EACH END	A449 TYPE 1
13	114*	0080.18901	Ø 1" HEAVY HEX NUTS	A563 DH
14	58*	0080.18911	Ø 1" FLAT WASHERS	F436
15	56	0080.18905	Ø 1" HEX JAM NUTS	A563 DH
16	56	0080.07500	Ø 7/8" X 8" ROUND HEAD BOLT, NUT, SQ. WASHER, L.W.	A449, A563 DH, F436, ASME D18.2
17	14	0080.06400	Ø 3/4" X 8" HEX BOLT, NUT, (2) F.W., & L.W.	A325, A563DH, F436, & ASME D18.2
18	28	0080.06140	Ø 3/4" X 2-3/4" HEX BOLT, NUT, (2) F.W., & L.W.	A325, A563 DH, F436, & ASME D18.2
19	16	0080.06340	Ø 3/4" X 7-1/2" HEX BOLT, NUT, & (2) F.W.	A325, A563 DH, & F436
20	8	0080.06255	Ø 3/4" X 4-1/2" HEX BOLT, NUT, & (2) F.W.	A325, A563 DH, & F436
21	14	0033.00500	L5" X 5" X 5/8" RAILING ANGLE @ 6'	A572 Gr. 50
22	4		DELINEATORS - NOT SHOWN	(SUPPLIED BY CUSTOMER)

*-2 EXTRA FOR VOAT TESTING

Vermont Agency of Transportation
RECEIVED
ON: January 7, 2016
and Checked for
CONFORMANCE
BY: Rob Young DATE: 01/14/2016

APPROVED: Approval of drawings and/or procedures indicates concurrence with the information presented and does not relieve the Contractor or Fabricator of compliance with all specifications and code requirements	X	Stantec
APPROVED AS NOTED		
REVISE AND RESUBMIT		
NOT REVIEWED		

Date: 1/13/16

By: [signature]

This review by Stantec Consulting Services Inc. is for the sole purpose of ascertaining conformance with the general design concept. This review shall not mean that Stantec Consulting Services Inc approves the detail design inherent in the shop drawings, responsibility for which shall remain with the Contractor. Submitting same, and such review shall not relieve the Contractor of his responsibility for errors or omissions in the shop drawing or of his responsibility for meeting all requirements of the Contract Documents. The contractor is responsible for dimensions to be confirmed and correlated at the job site, for information that pertains solely to the fabrication processes or to techniques of construction and installation and for coordination of the work of all subtrades.

GENERAL NOTES:

1) ALL RAILING IS TO BE FABRICATED AND ERECTED ACCORDING TO SECTION 525 OF THE STANDARD SPECIFICATIONS.
2) PRIOR TO GALVANIZING THE ASSEMBLED POST, GRIND ALL EDGES TO A MINIMUM RADIUS OF 1/16".
3) ALL POST SHALL BE SET NORMAL TO GRADE. THE MAXIMUM CENTER TO CENTER SPACING OF BRIDGE RAIL POST IS 8' 3"
4) SECTIONS OF RAIL TUBE SHALL BE ATTACHED TO A MINIMUM OF TWO BRIDGE POSTS AND PREFERABLY TO AT LEAST 4 POSTS.
5) RAIL TUBE EXPANSION JOINTS SHALL BE PROVIDED IN ANY RAIL BAY SPANNING THE END OF AN INTEGRAL ABUTMENT BRIDGE AND AT ALL SUPER STRUCTURE EXPANSION JOINTS. EXPANSION JOINT WIDTH SHALL BE 4"@ 68°F AND WILL BE ADJUSTED IN THE FIELD BY THE ENGINEER FOR OTHER TEMPERATURES.
6) STD. SPLICE HOLES ONLY IN BRIDGE RAIL TUBES. REST TO BE DRILLED BY CUSTOMER. FIELD DRILLED HOLES TO BE COATED WITH AN APPROVED ZINC-RICH PAINT PRIOR TO INSTALLATION.
7) BOLTS SHALL BE TORQUED SNUG TIGHT (APPROXIMATELY 100 FT-LB).
8) SEE STANDARD DRAWING G-I FOR DETAILS OF DELINEATORS. A DELINEATOR SHALL BE INSTALLED AT 30 FOOT SPACING OR THE NEAREST POST. WHITE IS TO BE INSTALLED ON THE DRIVER'S RIGHT. FOR ONE WAY BRIDGES, YELLOW IS TO BE INSTALLED ON THE DRIVER'S LEFT. PAYMENT FOR DELINEATORS SHALL BE INCIDENTAL TO OTHER ITEMS.
9) ANY BENDING OF RAIL SHALL BE DONE AT THE FABRICATION PLANT ACCORDING TO A PROCEDURE PROVIDED BY THE FABRICATOR.
10) THE MINIMUM DISTANCE FROM THE POST TO AN EXPANSION JOINT SHALL BE DETERMINED BY THE MINIMUM EDGE DISTANCE OF 5" FROM ANY ANCHOR STUD TO THE END OF THE SLAB, OR THE EXPANSION JOINT RECESS POUR, IF ONE IS USED.
11) PROTRUSIONS CAUSED BY WELDING OR GALVANIZING ARE NOT PERMITTED ON THE ADJOINING SURFACES OF THE BOX BEAM RAILS, SPLICE TUBES AND FILL PLATES.
12) THIS RAILING MEETS THE REQUIREMENTS FOR A TL-4 SERVICE LEVEL.

ITEM #: 525.335

SHEET 1 OF 4

STRUCTURAL STEEL TO COMPLY W/ ASTM A6

TOLERANCE UNLESS OTHERWISE NOTED:
FRACTIONS = ± 1/16"
ANGLES = ± 1/2°
DIAMETERS = ± 1/32"

BRIDGE RAIL DETAILS SHEET

VERMONT ROUTE 106 (MAJOR COLLECTOR, RURAL), BRIDGE # 24
TOWN OF WOODSTOCK, COUNTY OF WINDSOR, VT.

REV	NO.	DATE	DESCRIPTION	BY
E	1	12/29/15	Revised Per 12/18/15 Markup	E.P.
V				

DRAWN	E.P.	11/30/15
CHECKED	D.L.	11/30/15
APPROVED	.	.
SCALE	SCHEMATIC	
DRAWING NO.	F.R. LaFAYETTE-WOODSTOCK (21)	

ELDERLEE, INC.
OAKS CORNERS, NEW YORK 14518
email: dlong@elderlee.com / epeek@elderlee.com
Tel: 315-789-6670 Fax: 315-789-6615

CERTIFIED FABRICATOR

ORTHOGRAPHIC PROJECTION

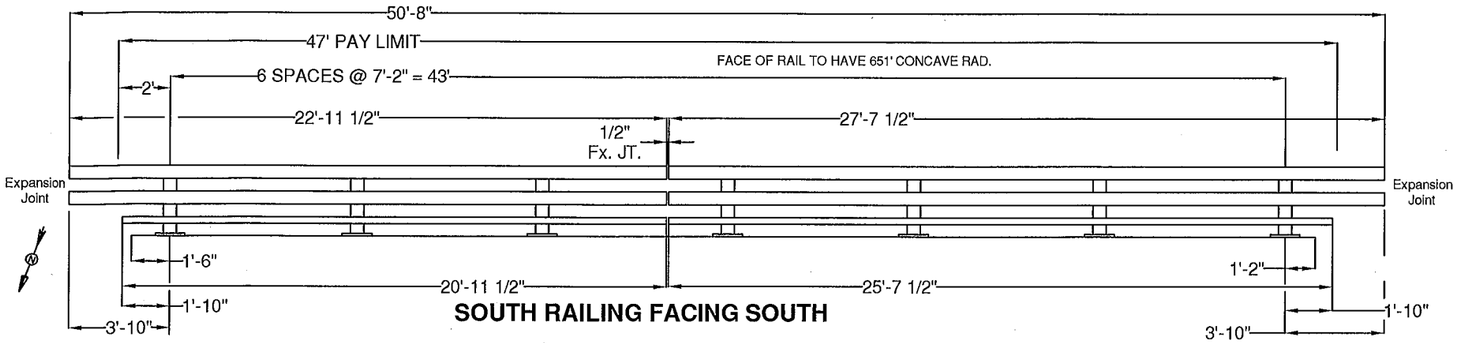

SOUTH RAILING FACING SOUTH

Vermont Agency of Transportation
RECEIVED
ON: January 7, 2016
and Checked for
CONFORMANCE
BY: Rob Young DATE: 01/14/2016

APPROVED: Approval of drawings and/or procedures indicates concurrence with the information presented and does not relieve the Contractor or Fabricator of compliance with all specifications and code requirements	X	Stantec
APPROVED AS NOTED		
REVISE AND RESUBMIT		
NOT REVIEWED		
Date: 1/13/16		
By:		

This review by Stantec Consulting Services Inc. is for the sole purpose of ascertaining conformance with the general design concept. This review shall not mean that Stantec Consulting Services Inc approves the detail design inherent in the shop drawings, responsibility for which shall remain with the Contractor. Submitting same, and such review shall not relieve the Contractor of his responsibility for errors or omissions in the shop drawing or of his responsibility for meeting all requirements of the Contract Documents. The contractor is responsible for dimensions to be confirmed and correlated at the job site, for information that pertains solely to the fabrication processes or to techniques of construction and installation and for coordination of the work of all subtrades.

SPLICE BAR - FIXED

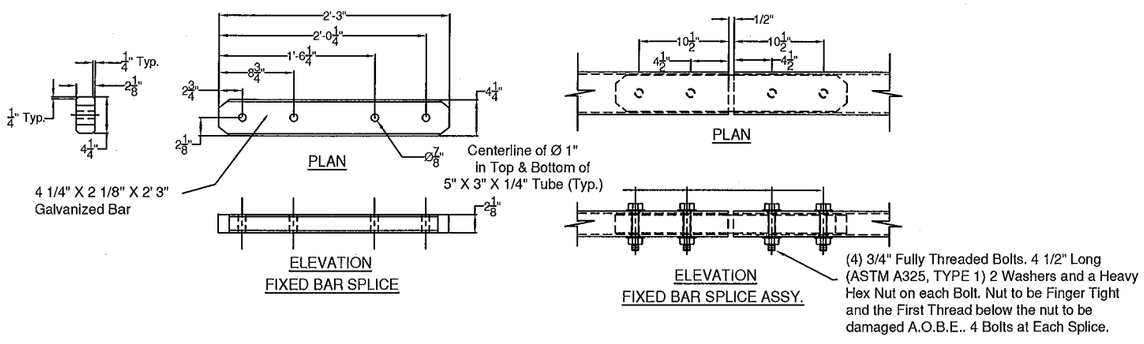

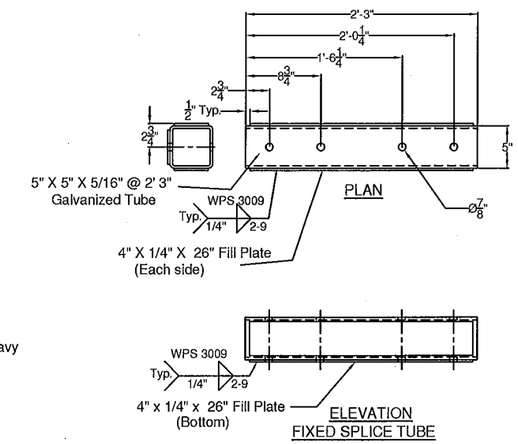

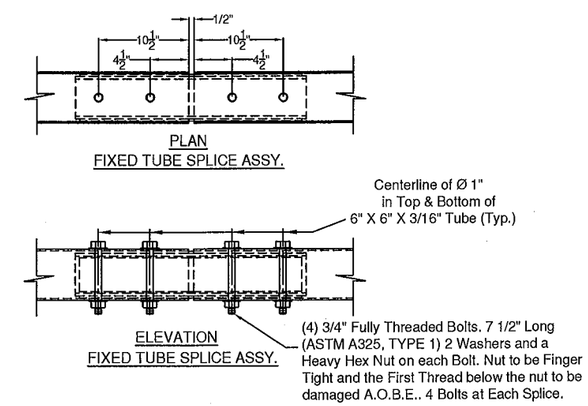

SPLICE TUBE - FIXED

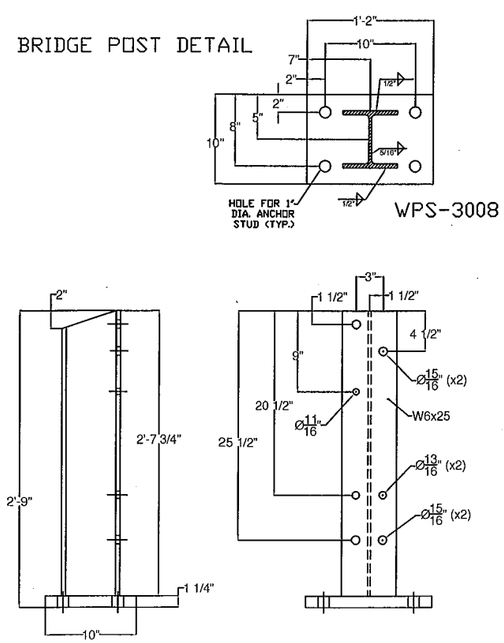

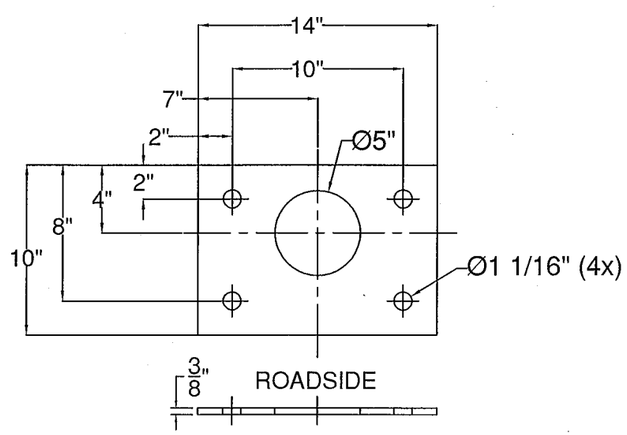

ANCHOR PLATE

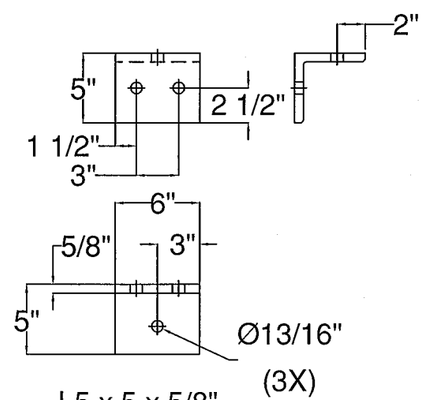

L5 x 5 x 5/8"
RAILING ANGLE

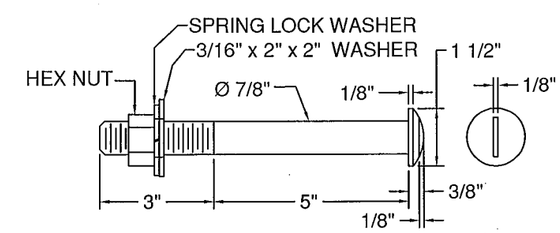

SLOTTED ROUND HEAD BOLT

ITEM #: 525.335

SHEET 2 OF 4

STRUCTURAL STEEL TO COMPLY W/ ASTM A6

TOLERANCE UNLESS OTHERWISE NOTED:
FRACTIONS = ± 1/16"
ANGLES = ± 1/2°
DIAMETERS = ± 1/32"

BRIDGE RAIL DETAILS SHEET

VERMONT ROUTE 106 (MAJOR COLLECTOR, RURAL), BRIDGE # 24
TOWN OF WOODSTOCK, COUNTY OF WINDSOR, VT.

R	NO.	DATE	DESCRIPTION	BY	R	NO.	DATE	DESCRIPTION	BY
E	1	12/29/15	Revised Per 12/18/15 Markup	E.P.	E				
V					V				

ELDERLEE, INC.
OAKS CORNERS, NEW YORK 14518
email: dlong@elderlee.com / epeek@elderlee.com
Tel: 315-789-6670 Fax: 315-789-6615

AISC CERTIFIED FABRICATOR
ORTHOGRAPHIC PROJECTION

DRAWN	E.P.	11/30/15
CHECKED	D.L.	11/30/15
APPROVED	.	.
SCALE	SCHEMATIC	
DRAWING NO.	F.R. LaFAYETTE-WOODSTOCK (21)	

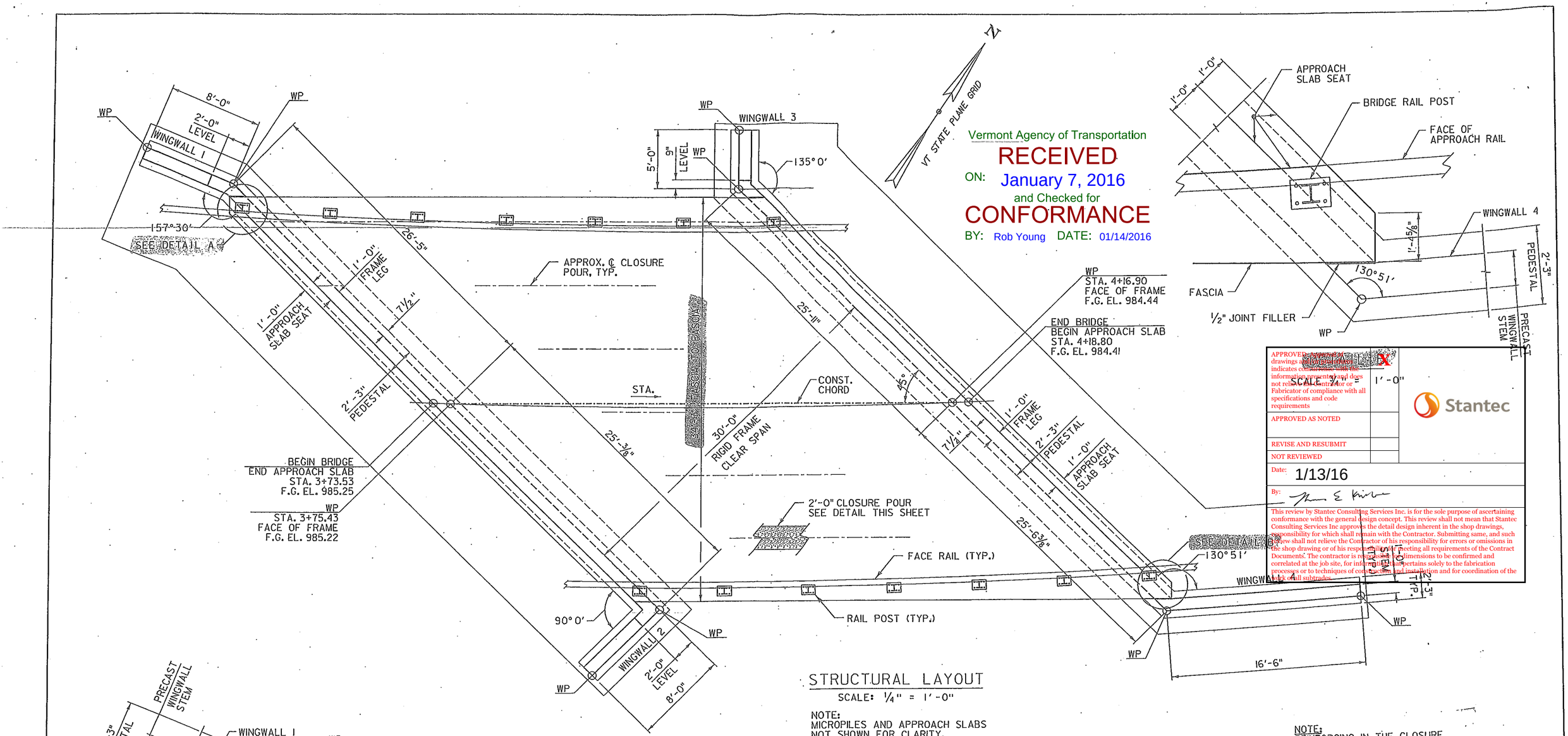

STRUCTURAL LAYOUT

SCALE: ¼" = 1'-0"

NOTE:
MICROPILES AND APPROACH SLABS NOT SHOWN FOR CLARITY.

NOTE:
REINFORCING IN THE CLOSURE POUR WILL BE PAID UNDER ITEM 507.12, REINFORCING STEEL, LEVEL II (FPO).

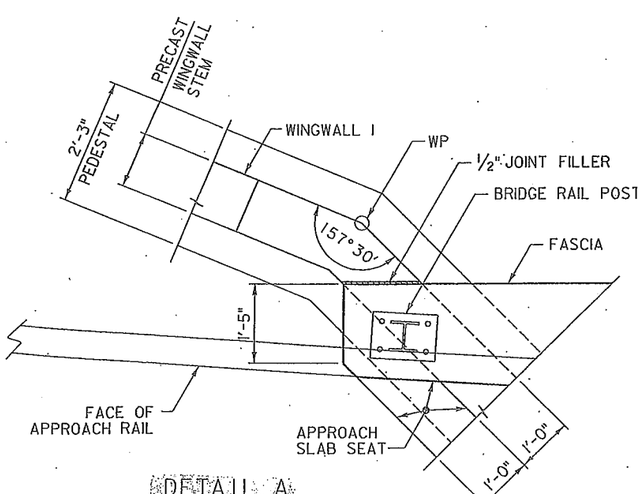

DETAIL A

SCALE ¾" = 1'-0"

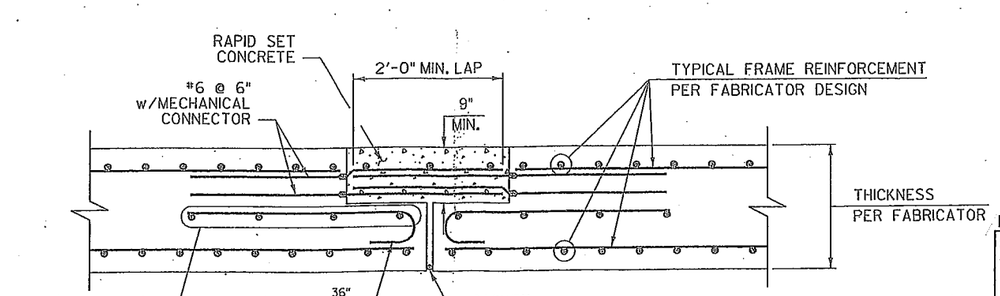

PRECAST FRAME ROOF CLOSURE POUR DETAIL

SCALE: 1" = 1'-0".

Vermont Agency of Transportation
RECEIVED
ON: January 7, 2016
and Checked for
CONFORMANCE
BY: Rob Young DATE: 01/14/2016

APPROVED as noted. Approved drawings and specifications indicates conformance with the information presented and does not relieve the Contractor or Fabricator of compliance with all specifications and code requirements

DETAIL A	X
SCALE ¾" =	1'-0"
APPROVED AS NOTED	
REVISE AND RESUBMIT	
NOT REVIEWED	

Stantec

Date: 1/13/16

By: [signature]

This review by Stantec Consulting Services Inc. is for the sole purpose of ascertaining conformance with the general design concept. This review shall not mean that Stantec Consulting Services Inc approves the detail design inherent in the shop drawings, responsibility for which shall remain with the Contractor. Submitting same, and such review shall not relieve the Contractor of his responsibility for errors or omissions in the shop drawing or of his responsibility for meeting all requirements of the Contract Documents. The contractor is responsible for dimensions to be confirmed and correlated at the job site, for information that pertains solely to the fabrication processes or to techniques of construction and installation and for coordination of the work of all subtrades.

ITEM #: 525.335

SHEET 3 OF 4

STRUCTURAL STEEL TO COMPLY W/ ASTM A6

TOLERANCE UNLESS OTHERWISE NOTED:
FRACTIONS = ± 1/16"
ANGLES = ± 1/2°
DIAMETERS = ± 1/32"

BRIDGE RAIL DETAILS SHEET

VERMONT ROUTE 106 (MAJOR COLLECTOR, RURAL), BRIDGE # 24
TOWN OF WOODSTOCK, COUNTY OF WINDSOR, VT.

REV	NO.	DATE	DESCRIPTION	BY	REV	NO.	DATE	DESCRIPTION	BY

ELDERLEE, INC.
OAKS CORNERS, NEW YORK 14518
email: dlong@elderlee.com / speek@elderlee.com
Tel: 315-789-6670 Fax: 315-789-6615

CERTIFIED FABRICATOR
ORTHOGRAPHIC PROJECTION

DRAWN	E.P.	11/30/15
CHECKED	D.L.	11-25-15
APPROVED		
SCALE	SCHEMATIC	

DRAWING NO. F.R. LaFAYETTE-WOODSTOCK (15

Vermont Agency of Transportation
RECEIVED
ON: January 7, 2016
and Checked for
CONFORMANCE
BY: Rob Young DATE: 01/14/2016

APPROVED: Approval of drawings and/or procedures indicates concurrence with the information presented and does not relieve the Contractor or Fabricator of compliance with all specifications and code requirements	X	Stantec
APPROVED AS NOTED		
REVISE AND RESUBMIT		
NOT REVIEWED		

Date: 1/13/16

By: [signature]

The review by Stantec Consulting Services Inc. is for the sole purpose of ascertaining conformance with the general design concept. This review shall not mean that Stantec Consulting Services Inc approves the detail design inherent in the shop drawings, responsibility for which shall remain with the Contractor. Submitting same, and such review shall not relieve the Contractor of his responsibility for errors or omissions in the shop drawing or of his responsibility for meeting all requirements of the Contract Documents. The contractor is responsible for dimensions to be confirmed and correlated at the job site, for information that pertains solely to the fabrication processes or to techniques of construction and installation and for coordination of the work of all subtrades.

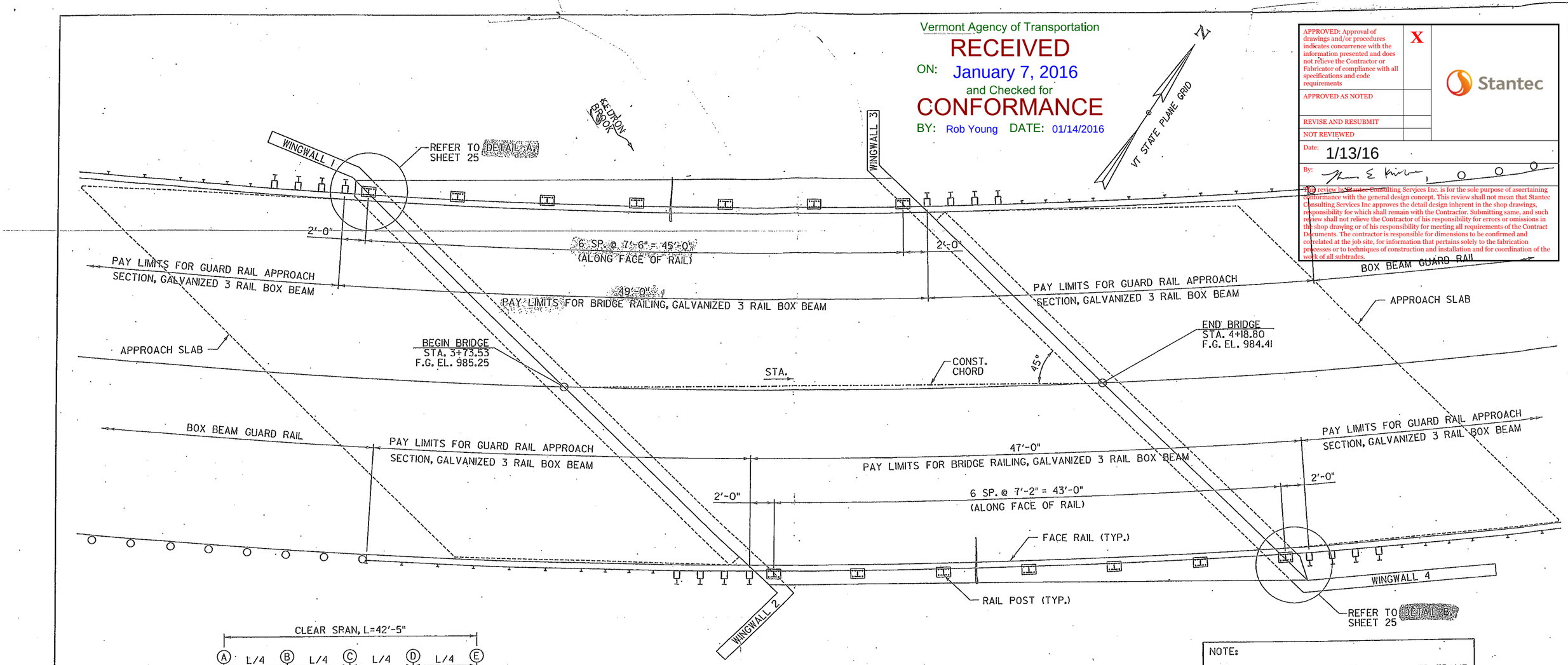

BRIDGE RAIL LAYOUT
SCALE: 1/4" = 1'-0"

NOTE:
RAIL POST SPACING IS BASED ON ASSUMED FRAME LEG THICKNESS OF 1'-0". THE FABRICATOR SHALL ADJUST DIMENSIONS AS NECESSARY BASED ON ACTUAL FRAME LEG THICKNESS USED.

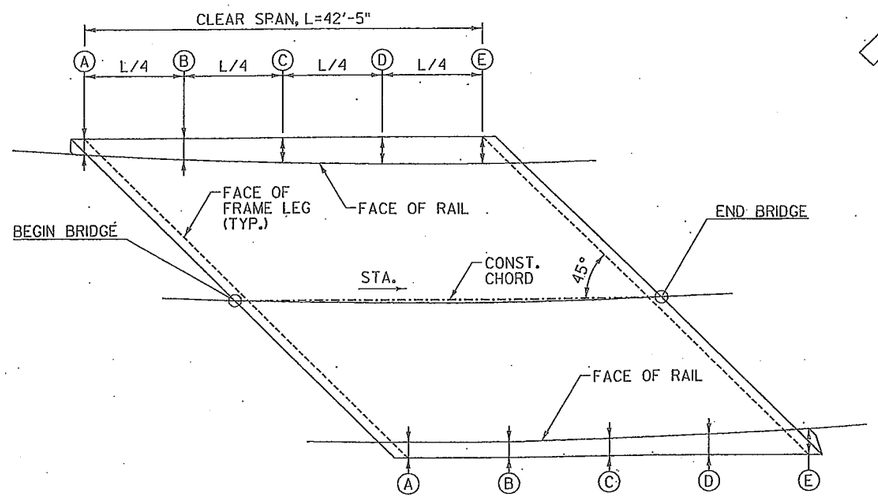

FACE OF RAIL TO FASCIA OFFSET
NOT TO SCALE

TABLE OF OFFSETS FROM FACE OF RAIL TO FASCIA		
POINT	OFFSET TO LEFT FASCIA (FT)	OFFSET TO RIGHT FASCIA (FT)
A	1.73	1.68
B	2.31	1.69
C	2.7	1.88
D	2.92	2.23
E	2.96	2.76

ITEM #: 525.335

SHEET 4 OF 4

STRUCTURAL STEEL TO COMPLY W/ ASTM A6

TOLERANCE UNLESS OTHERWISE NOTED:
FRACTIONS = ± 1/16"
ANGLES = ± 1/2"
DIAMETERS = ± 1/32"

BRIDGE RAIL DETAILS SHEET

VERMONT ROUTE 108 (MAJOR COLLECTOR, RURAL), BRIDGE # 24
TOWN OF WOODSTOCK, COUNTY OF WINDSOR, VT.

REV	NO.	DATE	DESCRIPTION	BY	REV	NO.	DATE	DESCRIPTION	BY

ELDERLEE, INC.
OAKS CORNERS, NEW YORK 14518
email: dlong@elderlee.com / epeek@elderlee.com
Tel: 315-789-6670 Fax: 315-789-6615

CERTIFIED FABRICATOR
ORTHOGRAPHIC PROJECTION

DRAWN	E.P.	11/30/15
CHECKED	D.L.	11-23-15
APPROVED		
SCALE	SCHEMATIC	
DRAWING NO.	F.R. LaFAYETTE-WOODSTOCK (15	

WELDING PROCEDURE SPECIFICATION

PQR ELDERLEE#1

Material Specification	A572 GRD. 50 /A992-06a
Welding Process	FCAW
Manual or Machine	SEMAUTOMATIC
Position of Welding	FLAT/HORIZONTAL
Filler Metal Specification	A5.20
Filler Metal Classification	E70 LINCOLN OUTERSHEILD
Flux	N/A
Shielding Gas	CO 2 Dew Point -40DEG F Flow Rate 50 CFH (45 TO 63 CFH)
Single or Multiple Pass	SINGLE
Single or Multiple Arc	N/A
Welding Current	DC
Polarity	DCEP
Welding Progression	STRINGER
Root Treatment	PER D1.5
Preheat and Interpass Temperature	PER D1.5
Postheat Temperature	NONE
Heat Input	Min _____ Max _____

WELDING PROCEDURE

Pass no.	Electrode size	Welding Current Amperes	Welding Current Volts	Travel speed	Joint detail
1	3/32	390	27	12	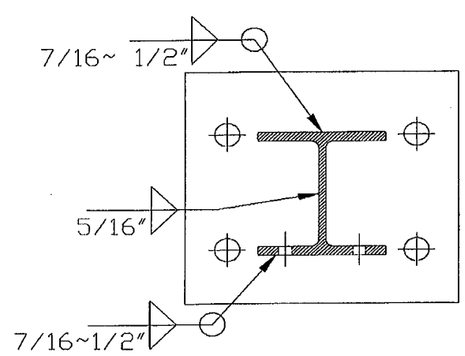
Variable	LIMITS	351 TO 429	25 TO 29	11 TO 13	

This procedure may vary due to fabrication sequence, fit-up, pass size, etc., within the limitation of variables given in Section 5.

Procedure No. 3008

Revision No. _____

Contractor Elderlee, Inc.

Authorized By RANDY SCOTT

Date 12/14/2015

Vermont Agency of Transportation

RECEIVED

Woodstock BRF 0151 (21) - Rail Shop Drawing Submittal - Rev 1_ReviewedbyStantec_Approved.pdf

CK'D BY _____ OK'D BY Rob Young

January 7, 2016

RESUBMIT No Approved

BY Rob Young DATE 01/14/2016

WELDING PROCEDURE SPECIFICATION

PQR ELDERLEE #3

Material Specification	A709 TO A500 GR B
Welding Process	FCAW-G
Manual or Machine	SEMAUTOMATIC
Position of Welding	FLAT/HORIZONTAL
Filler Metal Specification	A5.29
Filler Metal Classification	E81T1-Ni1C-JH4
Flux	N/A
Shielding Gas	CO 2 Dew Point -40DEG F Flow Rate 50CFH
Single or Multiple Pass	SINGLE
Single or Multiple Arc	SINGLE
Welding Current	DC
Polarity	REVERSE ELECTRODE POSITIVE
Welding Progression	STRINGER
Root Treatment	D1.5
Preheat and Interpass Temperature	D1.5
Postheat Temperature	NONE
Heat Input	Min _____ Max _____

Vermont Agency of Transportation

RECEIVED

Woodstock BRF 0151 (21) - Rail Shop Drawing Submittal - Rev 1_ReviewedBy:Stantec_Approved.pdf

CK'D BY _____ OK'D BY Rob Young

January 7, 2016

RESUBMIT No Approved

BY Rob Young DATE 01/14/2016

WELDING PROCEDURE

Pass no.	Electrode size	Welding Current Amperes	Welding Current Volts	Travel speed	Joint detail
1	1/16	310	25	11	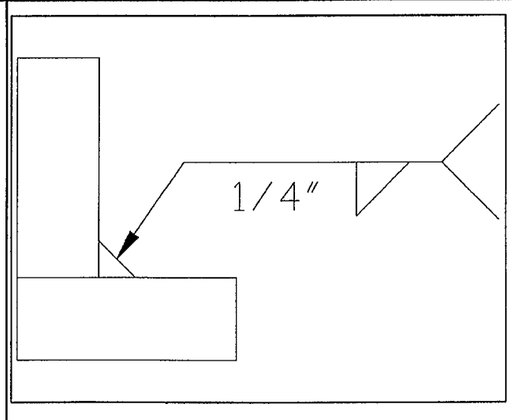
Variable	LIMITS	341 TO 269	27 TO 23	12 TO 10	

This procedure may vary due to fabrication sequence, fit-up, pass size, etc., within the limitation of variables given in Section 5.

Procedure No.	3009	Contractor	Elderlee, Inc.
Revision No.		Authorized By	RANDY SCOTT
		Date	3/20/2014

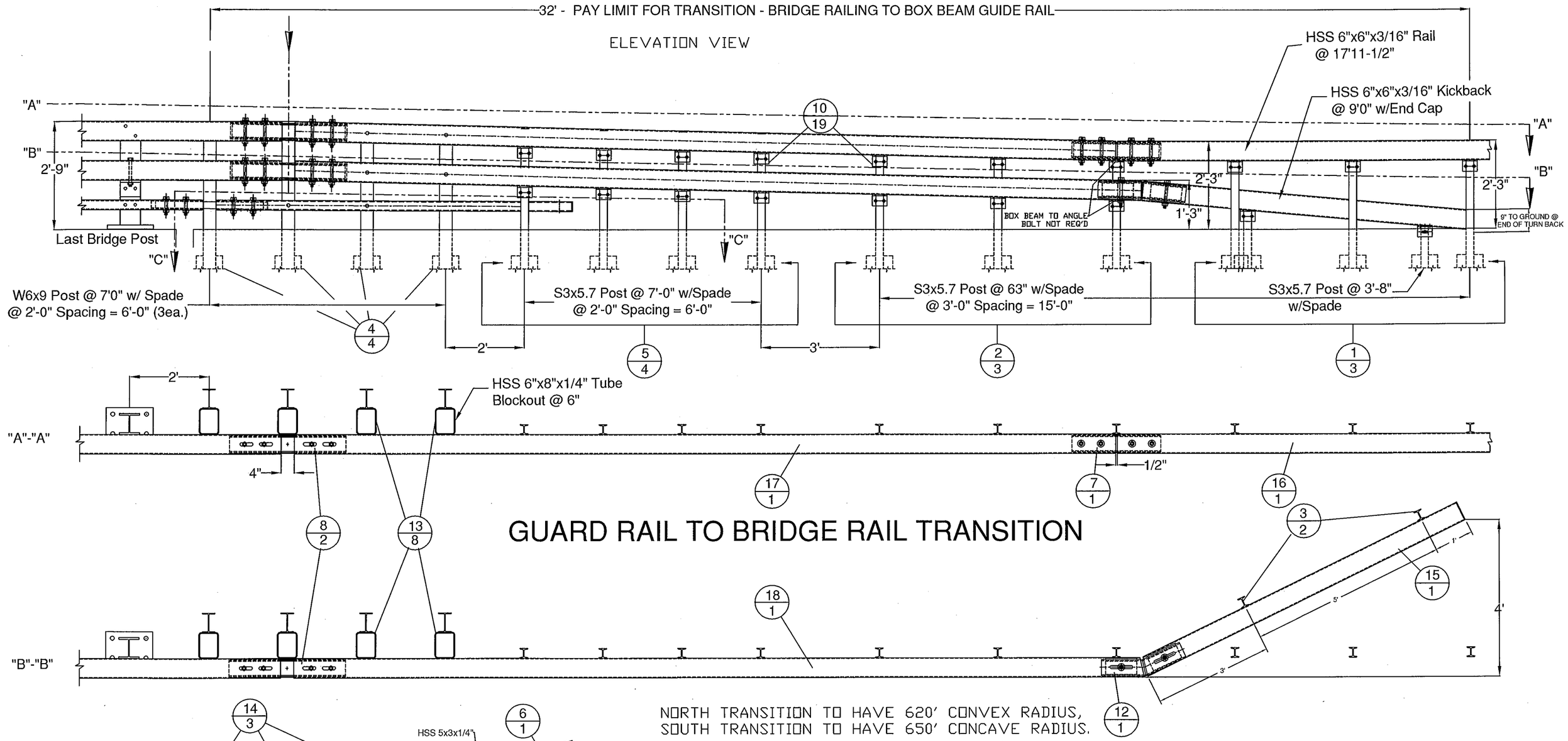

GUARD RAIL TO BRIDGE RAIL TRANSITION

NORTH TRANSITION TO HAVE 620' CONVEX RADIUS,
SOUTH TRANSITION TO HAVE 650' CONCAVE RADIUS.

Vermont Agency of Transportation
RECEIVED
ON: January 7, 2016
and Checked for
CONFORMANCE
BY: Rob Young DATE: 01/14/2016

APPROVED: Approval of drawings and/or procedures indicates concurrence with the information presented and does not relieve the Contractor or Fabricator of compliance with all specifications and code requirements	X
APPROVED AS NOTED	
REVISE AND RESUBMIT	
NOT REVIEWED	
Date: 1/13/16	
By:	

Stantec

This review by Stantec Consulting Services Inc. is for the sole purpose of ascertaining conformance with the general design concept. This review shall not mean that Stantec Consulting Services Inc approves the detail design inherent in the shop drawings, responsibility for which shall remain with the Contractor. Submitting same, and such review shall not relieve the Contractor of his responsibility for errors or omissions in the shop drawing or of his responsibility for meeting all requirements of the Contract Documents. The contractor is responsible for dimensions to be confirmed and correlated at the job site, for information that pertains solely to the fabrication processes or to techniques of construction and installation and for coordination of the work of all subtrades.

ITEM #: 621.725

STRUCTURAL STEEL TO COMPLY W/ ASTM A6

TOLERANCE UNLESS OTHERWISE NOTED:
FRACTIONS = ± 1/16"
ANGLES = ± 1/2°
DIAMETERS = ± 1/32"

SHEET 1 OF 5

GUARD RAIL TO BRIDGE RAIL TRANSITION DETAILS SHEET

VERMONT ROUTE 106 (MAJOR COLLECTOR, RURAL), BRIDGE # 24
TOWN OF WOODSTOCK, COUNTY OF WINDSOR, VT.

R E V	NO.	DATE	DESCRIPTION	BY
	1	12/29/15	Revised Per 12/18/15 Markup	E.P.

R E V	NO.	DATE	DESCRIPTION	BY

ELDERLEE, INC.
OAKS CORNERS, NEW YORK 14518
email: dlong@elderlee.com / epeek@elderlee.com
Tel: 315-789-6670 Fax: 315-789-6615

AISC CERTIFIED FABRICATOR

ORTHOGRAPHIC PROJECTION

DRAWN	E.P.	11/30/15
CHECKED	D.L.	11/30/15
APPROVED		
SCALE	SCHEMATIC	
DRAWING NO.	F.R. LaFAYETTE-WOODSTOCK (21	

Vermont Agency of Transportation
RECEIVED
ON: January 7, 2016
and Checked for
CONFORMANCE
BY: Rob Young DATE: 01/14/2016

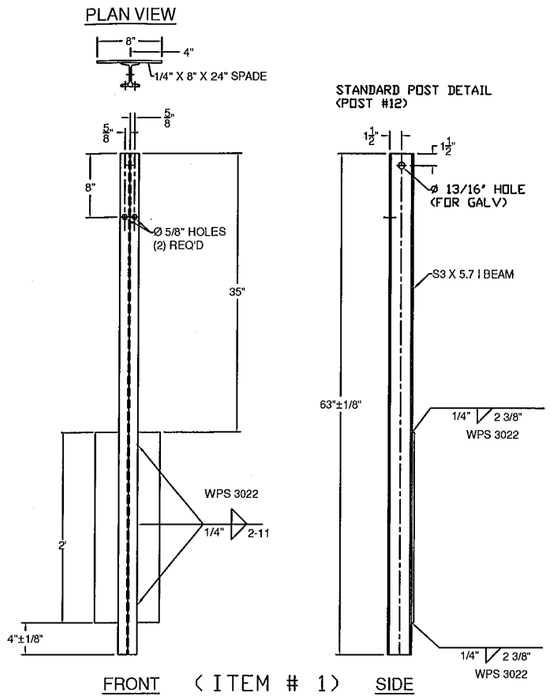

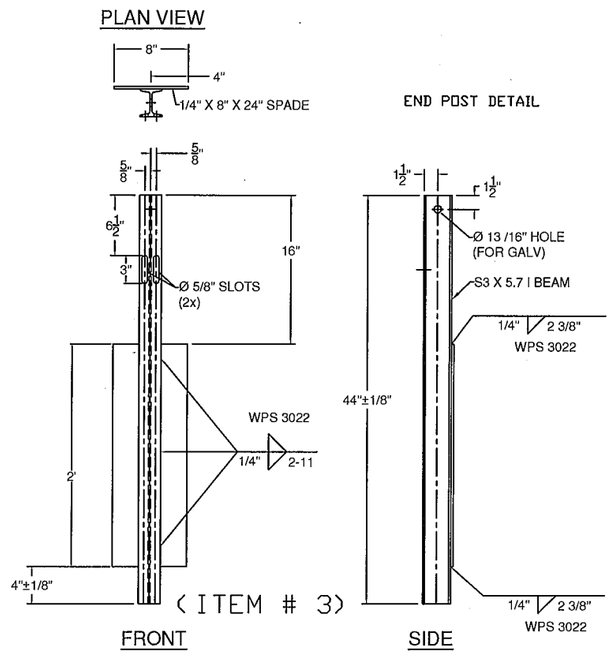

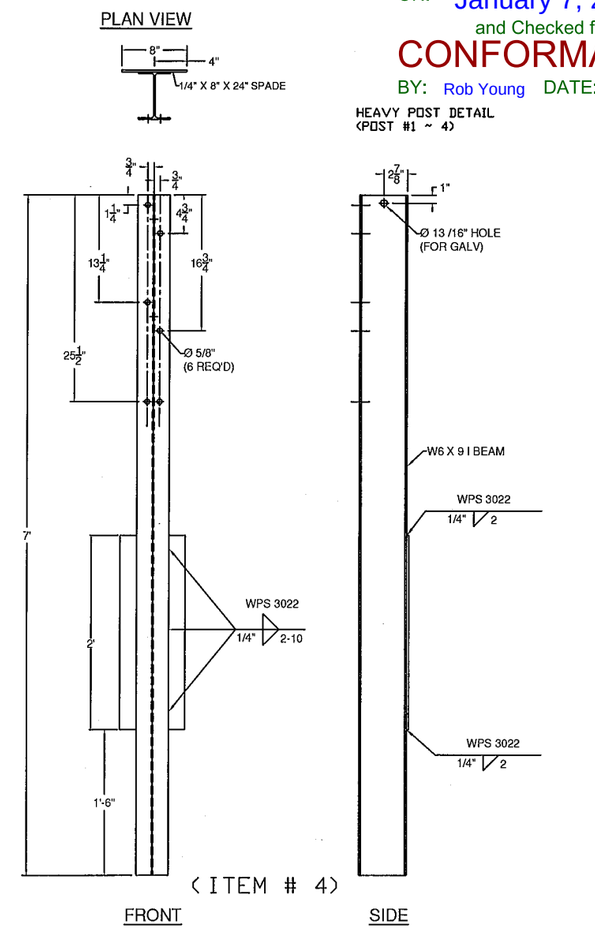

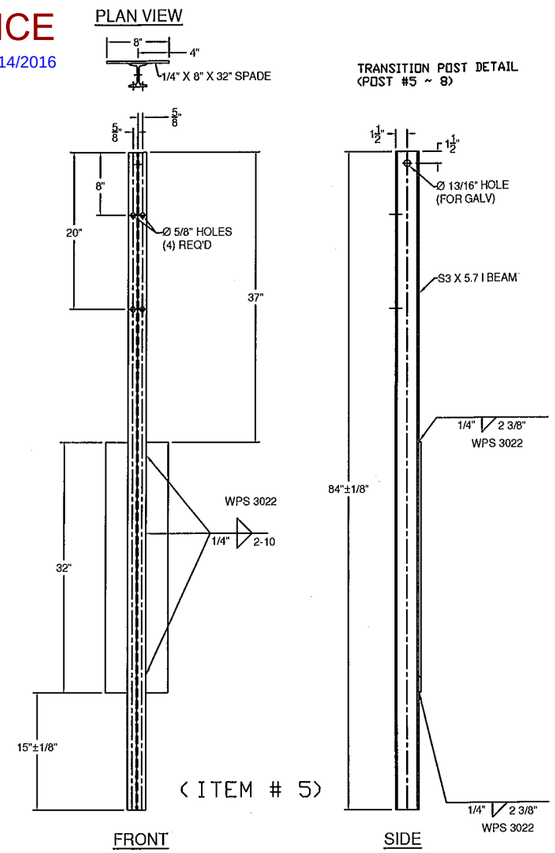

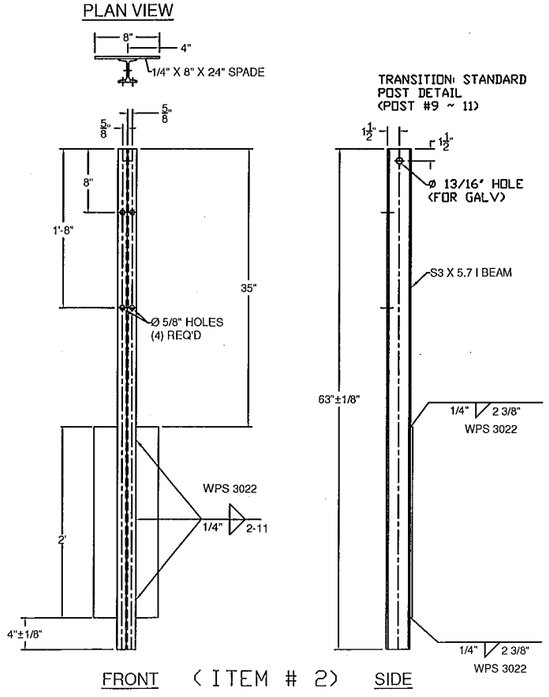

GENERAL NOTES:

1) ALL RAILING IS TO BE FABRICATED AND ERECTED ACCORDING TO SECTION 525 OF THE STANDARD SPECIFICATIONS.
2) BOLTS SHALL BE TORQUED SNUG TIGHT (APPROXIMATELY 100 FT-LB).
3) PROTRUSIONS CAUSED BY WELDING OR GALVANIZING ARE NOT PERMITTED ON THE ADJOINING SURFACES OF THE BOX BEAM RAILS, SPLICE TUBES AND FILL PLATES.
4) BOX BEAM TUBE AND STEEL POST MATERIALS, DIMENSION SIZES AND NOTES SHALL BE THE SAME AS THOSE OF THE BRIDGE RAIL, UNLESS OTHERWISE NOTED.
5) ANY BENDING OF RAIL SHALL BE DONE AT THE FABRICATION PLANT. RADII GREATER THAN 16' TO BE CURVED ON A TUBE BENDING MACHINE, RADII EQUAL OR LESS THAN 16' TO BE "PIE CUT" AND WELDED. CURVED RAILING WILL HAVE AN 18" LENGTH ON EACH END STRAIGHT TO ACCOMADATE SPLICES. "PIE CUTS ARE LOCATED SO AS TO NOT CONFLICT WITH POST FASTENING HOLES. PIE CUTS WILL BE WELDED ACCORDING TO PROCEDURE WPS-3026.

BILL OF MATERIALS (EACH CORNER)

ITEM #	QTY.	COMPONENT #	DESCRIPTION	MATERIAL (ASTM)
1	3	0013.57021	S3 X 5.7 POST, PUNCH 8' W/SPD @ 63' LG	ASTM A572 Gr. 50
2	3	0013.57025	S3 X 5.7 POST, PUNCH 8', & 20' W/SPD @ 63' LG	ASTM A572 Gr. 50
3	2	0013.57060	S3 X 5.7 END POST W/SPD @ 3'-8' LG	ASTM A572 Gr. 50
4	4	0013.09001	W6 X 9 POST @ 7' W/SPD & 5/8' HOLES	ASTM A572 Gr. 50
5	4	0013.57010	S3 X 5.7 POST, PUNCH 8' & 20', W/8X32' SPADE @7'	ASTM A572 Gr. 50
6	1	0033.80403	3 X 5' BTM TRANS RAIL W/5'-0' KB, EXP END	A500 Gr. B
7	1	0033.00640	HSS 5X5 TUBE SPLICE @27' LG W/ 1/4' SHIMS	A500 Gr. B / A572 Gr 50
8	2	0033.00730	HSS 5x5 EXP TUBE SPLICE @ 36' LG W/ 1/4' SHIMS	A500 Gr. B / A572 Gr 50
9	1	0033.00930	BR EXP BAR SPLICE 2-1/8' X 4-1/4' @ 36' LG	ASTM A36
10	19	0054.00050	REG BB SHELF ANGLES @ 4-1/2'	ASTM A36
12	1	0054.00074	HSS 5 X 5 X 5/16' DBL BEND TUBE SPL @ 27' LG,	A500 Gr. B / A572 Gr 50
13	8	0054.00563	6 X 8 X 1/4' TRANS. TUBE B/D @ 6' LG	A500 Gr. B
14	3	0054.00565	6 X 8 X 1/4' TRANS. TUBE B/D @ 3' LG	A500 Gr. B
15	1	0054.09000	6 X 6 x 3/16' BB @ 9'-0' KICKBACK, W/ CAP, & 13' MITER	A500 Gr. B / A36
*16A	1	T.B.D.	6 X 6 x 3/16' BB @ 9'-0' (THIS PAY ITEM), DRILL 3' CC, 620' CONVEX	A500 Gr. B
*16B	1	T.B.D.	6 X 6 x 3/16' BB @ 9'-0' (THIS PAY ITEM), DRILL 3' CC, 650' CONCAVE	A500 Gr. B
*17A	1	T.B.D.	6 X 6 x 3/16' BB TOP TRANS @ 20'-9 5/8' LG W/EXP END, 620' CONVEX	A500 Gr. B
*17B	1	T.B.D.	6 X 6 x 3/16' BB TOP TRANS @ 20'-9 5/8' LG W/EXP END, 650' CONCAVE	A500 Gr. B
*18A	1	T.B.D.	6 X 6 x 3/16' BB BTM TRANS @ 21'-4 5/8' LG W/EXP END, 620' CONVEX	A500 Gr. B
*18B	1	T.B.D.	6 X 6 x 3/16' BB BTM TRANS @ 21'-4 5/8' LG W/EXP END, 650' CONCAVE	A500 Gr. B
19	18	0080.03355	3/8' X 7 1/2' BOLT, NUT, & 2 FW	A307, A563 DH, F436
20	19	0080.04100	1/2' x 1-1/2' BOLT, NUT, & FW	A307, A563 DH, F436
21	22	0080.04120	1/2' x 1-1/2' BOLT, NUT, 2 FW & LW	A307, A563 DH, F436
22	4	0080.06255	3/4' X 4-1/2' BOLT, NUT, 2 FW	A325, A563 DH, F436
23	12	0080.06340	3/4' X 7-1/2' BOLT, NUT, 2 FW	A325, A563 DH, F436
24	6	0080.06370	3/4' X 8' CARR BOLT, NUT, FW & LW	A307, A563 DH, F436
25	2	0080.06400	3/4' X 8' BOLT, NUT, 2 FW, & LW	A325, A563 DH, F436

* ITEM #'S 16, 17, & 18 - WW 1 & 3 TO HAVE 620' CONVEX RADIUS, WW 2 & 4 TO HAVE 650' CONCAVE RADIUS

HARDWARE NOTES

ITEM #	FUNCTION
19	BOLT RAIL TO SHELF ANGLE (ITEM #10)
20	BOLT SHELF ANGLE (ITEM #'S 10 & 11) TO POST
21	BOLT BLOCK-OUTS (ITEM #'S 13 & 14) TO HEAVY POST
22	(4) PER SPLICE BAR (ITEM #9)
23	(4) PER SPLICE TUBING (ITEM #'S 7 & 8)
24	BOLT RAIL (ITEMS #'S 6,17, & 18 TO BLOCK-OUTS (ITEM #'S 13 & 14) (WHERE FASTENED)
25	BOLT DOUBLE BEND SPLICE TUBE (ITEM #12) TO RAIL (ITEM #13) & KICKBACK (ITEM #15)

APPLICABLE NOTES IN THE BRIDGE RAIL DRAWING SHALL ALSO BE APPLICABLE ON THESE DRAWINGS

APPROVED: Approval of drawings and/or procedures indicate compliance with the information presented and does not relieve the Contractor or Fabricator of compliance with all specifications and code requirements
X
APPROVED AS NOTED
NOT APPROVED
Stantec
Date: 1/13/16
By:
This review by Stantec Consulting Services Inc. is for the sole purpose of ascertaining conformance with the general design concept. This review shall not mean that Stantec Consulting Services Inc approves the detail design inherent in the shop drawings, responsibility for which shall remain with the Contractor. Submitting same, and such review shall not relieve the Contractor of his responsibility for errors or omissions in the shop drawing or of his responsibility for meeting all requirements of the Contract Documents. The contractor is responsible for dimensions to be confirmed and correlated at the job site, for information that pertains solely to the fabrication processes or to techniques of construction and installation and for coordination of the work of all subtrades.

ITEM #: 621.725

SHEET 2 OF 5

STRUCTURAL STEEL TO COMPLY W/ ASTM A6

TOLERANCE UNLESS OTHERWISE NOTED:
FRACTIONS = ± 1/16"
ANGLES = ± 1/2°
DIAMETERS = ± 1/32"

GUARD RAIL TO BRIDGE RAIL TRANSITION DETAILS SHEET

VERMONT ROUTE 106 (MAJOR COLLECTOR, RURAL), BRIDGE # 24
TOWN OF WOODSTOCK, COUNTY OF WINDSOR, VT.

R E V	NO.	DATE	DESCRIPTION	BY	R E V	NO.	DATE	DESCRIPTION	BY
	1	12/29/15	Revised Per 12/18/15 Markup	E.P.					

ELDERLEE, INC.
OAKS CORNERS, NEW YORK 14518
email: dlong@elderlee.com / epeek@elderlee.com
Tel: 315-789-6670 Fax: 315-789-6615

AISC CERTIFIED FABRICATOR

ORTHOGRAPHIC PROJECTION

DRAWN	E.P.	11/30/15
CHECKED	D.L.	11/30/15
APPROVED		
SCALE	SCHEMATIC	
DRAWING NO.	F.R. LaFAYETTE-WOODSTOCK (21)	

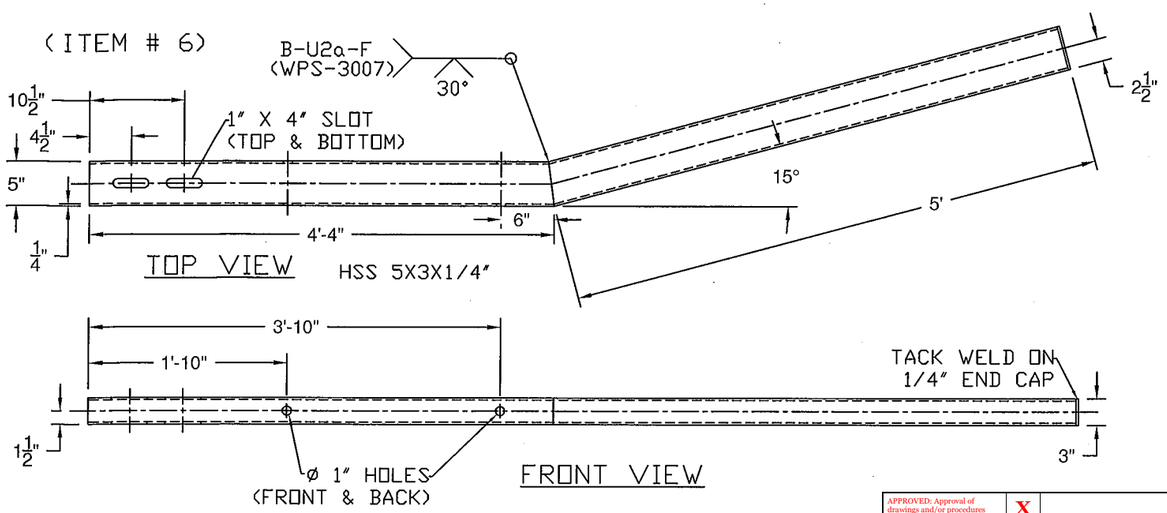

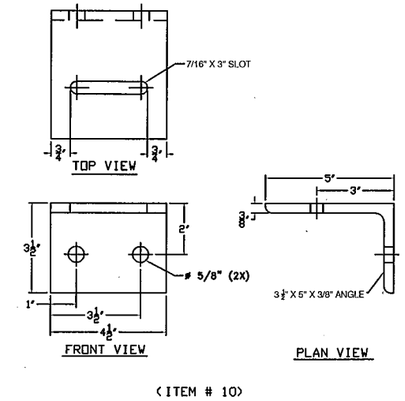

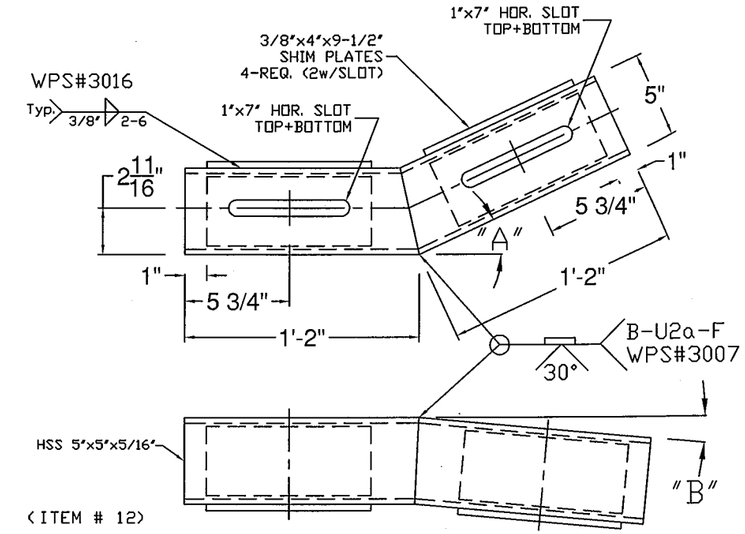

"A" - 26°
"B" - TURN DOWN ANGLE SET BY THE 9" MEASURMENT AT THE END OF THE BOX BEAM.

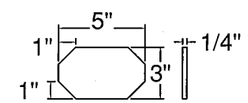

Vermont Agency of Transportation
RECEIVED
ON: January 7, 2016
and Checked for
CONFORMANCE
BY: Rob Young DATE: 01/14/2016

APPROVED: Approval of drawings and/or procedures indicates concurrence with the information presented and does not relieve the Contractor or Fabricator of compliance with all specifications and code requirements	X	Stantec
APPROVED AS NOTED		
REVISE AND RESUBMIT		
NOT REVIEWED		
Date: 1/13/16		
By:		

This review by Stantec Consulting Services Inc. is for the sole purpose of ascertaining conformance with the general design concept. This review shall not mean that Stantec Consulting Services Inc approves the detail design inherent in the shop drawings, responsibility for which shall remain with the Contractor. Submitting same, and such review shall not relieve the Contractor of his responsibility for errors or omissions in the shop drawing or of his responsibility for meeting all requirements of the Contract Documents. The contractor is responsible for dimensions to be confirmed and correlated at the job site, for information that pertains solely to the fabrication processes or to techniques of construction and installation and for coordination of the work of all subtrades.

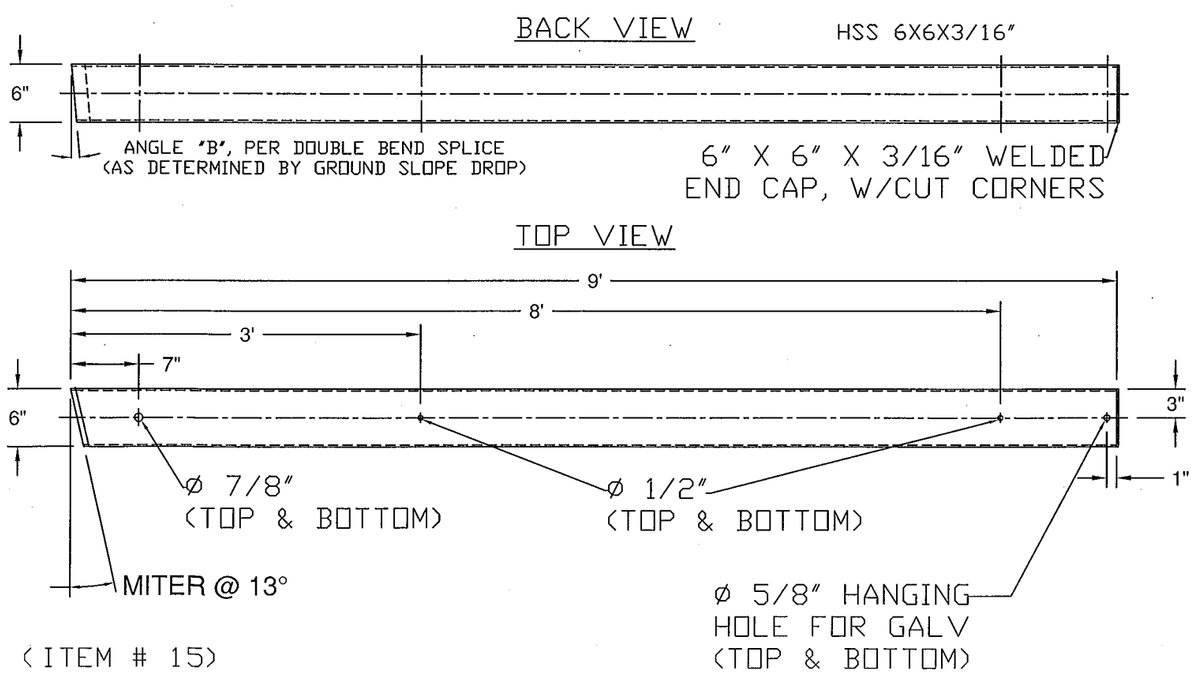

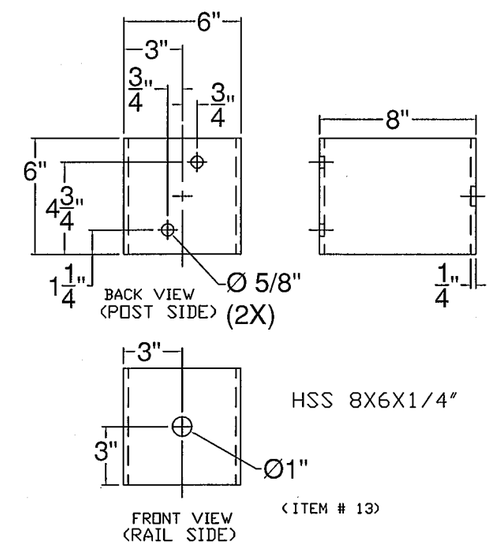

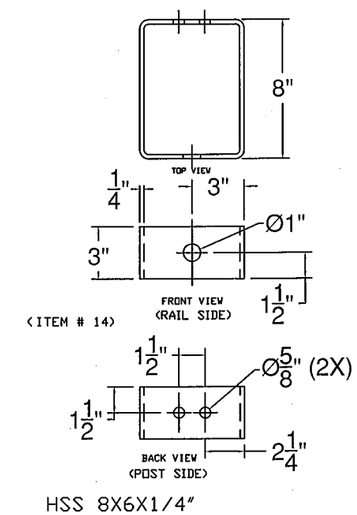

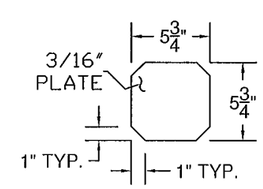

ITEM #: 621.725

SHEET 3 OF 5

STRUCTURAL STEEL TO COMPLY W/ ASTM A6

TOLERANCE UNLESS OTHERWISE NOTED:
FRACTIONS = ± 1/16"
ANGLES = ± 1/2°
DIAMETERS = ± 1/32"

GUARD RAIL TO BRIDGE RAIL TRANSITION DETAILS SHEET

VERMONT ROUTE 106 (MAJOR COLLECTOR, RURAL), BRIDGE # 24
TOWN OF WOODSTOCK, COUNTY OF WINDSOR, VT.

REV	NO.	DATE	DESCRIPTION	BY
1	12/29/15	Revised Per 12/18/15 Markup	E.P.	

REV	NO.	DATE	DESCRIPTION	BY

ELDERLEE, INC.
OAKS CORNERS, NEW YORK 14518
email: dlong@elderlee.com / epeek@elderlee.com
Tel: 315-789-6670 Fax: 315-789-6615

AISC CERTIFIED FABRICATOR

ORTHOGRAPHIC PROJECTION

DRAWN	E.P.	11/30/15
CHECKED	D.L.	11/30/15
APPROVED	.	.
SCALE	SCHEMATIC	
DRAWING NO.	F.R. LaFAYETTE-WOODSTOCK (21)	

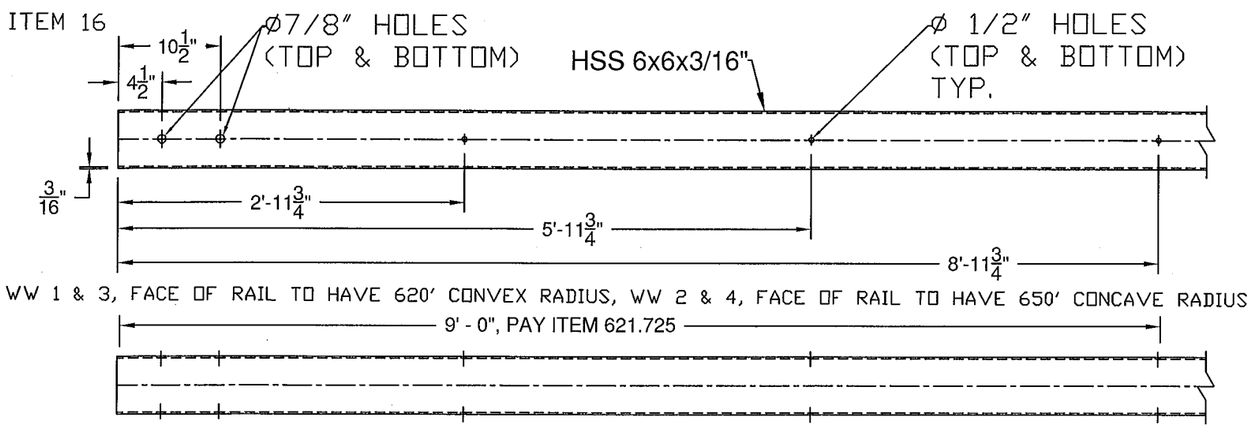

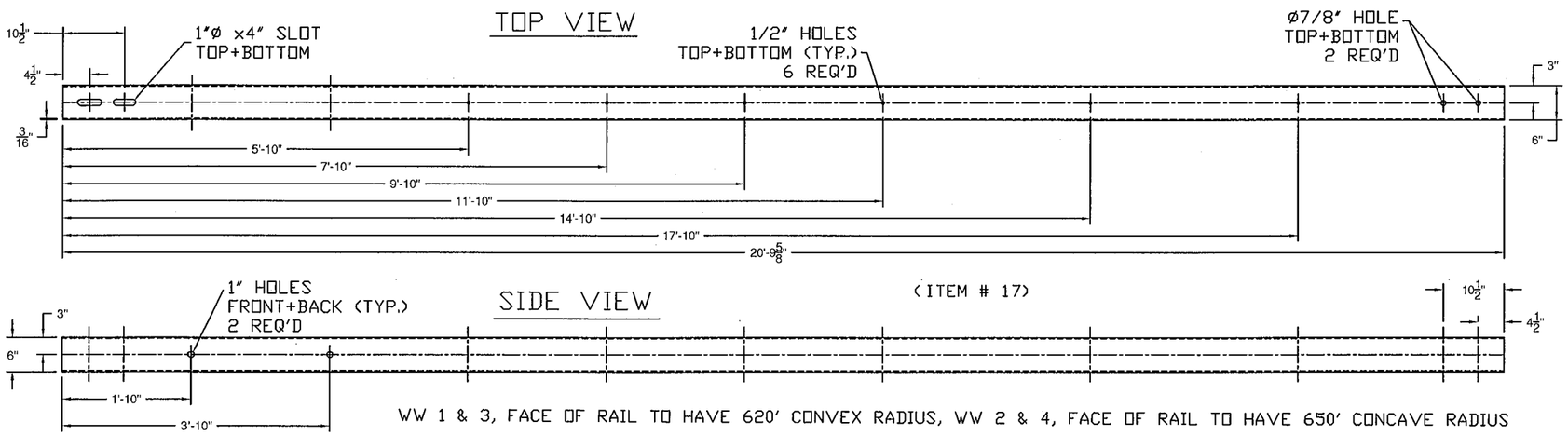

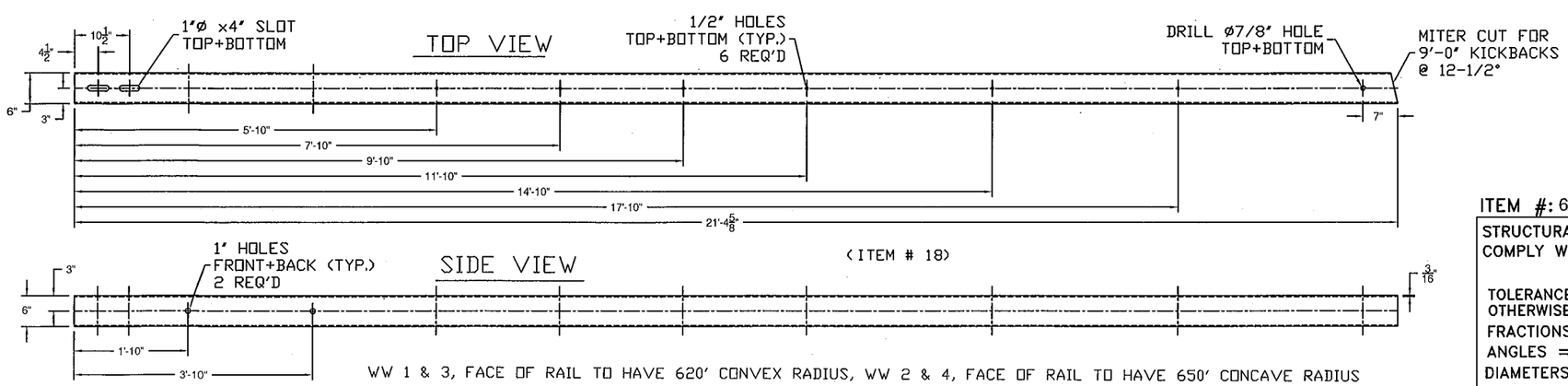

Vermont Agency of Transportation

RECEIVED

ON: January 7, 2016

and Checked for

CONFORMANCE

BY: Rob Young DATE: 01/14/2016

APPROVED: Approval of drawings and/or procedures indicates concurrence with the information presented and does not relieve the Contractor or Fabricator of compliance with all specifications and code requirements	X	Stantec
APPROVED AS NOTED		
REVISE AND RESUBMIT		
NOT REVIEWED		
Date: 1/13/16		
By:		

This review by Stantec Consulting Services Inc. is for the sole purpose of ascertaining conformance with the general design concept. This review shall not mean that Stantec Consulting Services Inc approves the detail design inherent in the shop drawings, responsibility for which shall remain with the Contractor. Submitting same, and such review shall not relieve the Contractor of his responsibility for errors or omissions in the shop drawing or of his responsibility for meeting all requirements of the Contract Documents. The contractor is responsible for dimensions to be confirmed and correlated at the job site, for information that pertains solely to the fabrication processes or to techniques of construction and installation and for coordination of the work of all subtrades.

ITEM #: 621.725

SHEET 4 OF 5

STRUCTURAL STEEL TO COMPLY W/ ASTM A6

TOLERANCE UNLESS OTHERWISE NOTED:
FRACTIONS = ± 1/16"
ANGLES = ± 1/2°
DIAMETERS = ± 1/32"

GUARD RAIL TO BRIDGE RAIL TRANSITION DETAILS SHEET

VERMONT ROUTE 106 (MAJOR COLLECTOR, RURAL), BRIDGE # 24
TOWN OF WOODSTOCK, COUNTY OF WINDSOR, VT.

REV	NO.	DATE	DESCRIPTION	BY
E	1	12/29/15	Revised Per 12/18/15 Markup	E.P.
V				

REV	NO.	DATE	DESCRIPTION	BY
E				
V				

ELDERLEE, INC.
OAKS CORNERS, NEW YORK 14518
email: dlong@elderlee.com / epeek@elderlee.com
Tel: 315-789-6670 Fax: 315-789-6615

AISC CERTIFIED FABRICATOR

ORTHOGRAPHIC PROJECTION

DRAWN	E.P.	11/30/15
CHECKED	D.L.	11/30/15
APPROVED	.	.
SCALE	SCHEMATIC	

DRAWING NO. F.R. LaFAYETTE-WOODSTOCK (21)

SPLICE BAR - EXPANSION

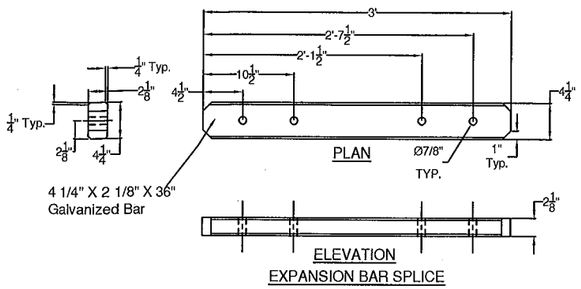

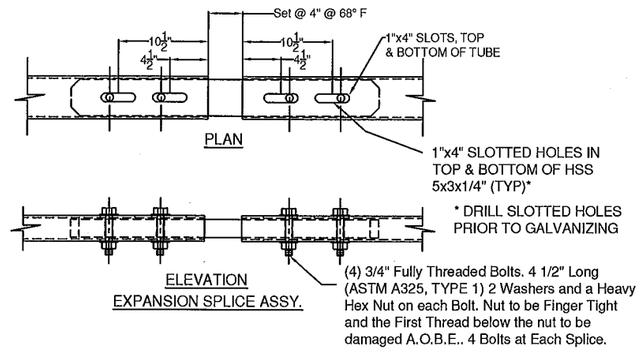

(ITEM # 9)

SPLICE TUBE - EXPANSION

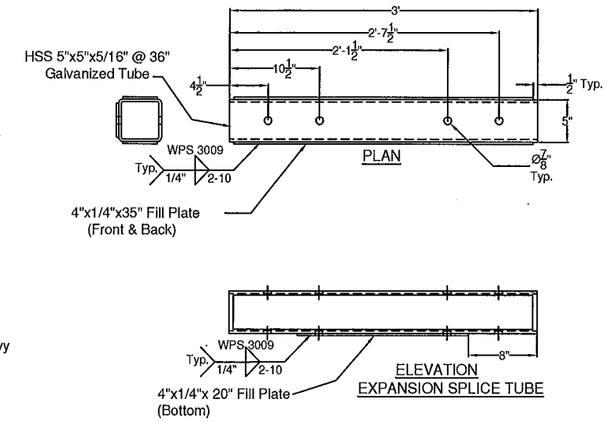

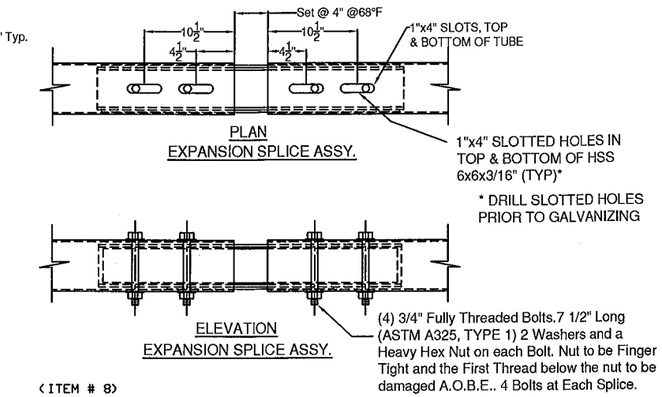

(ITEM # 8)

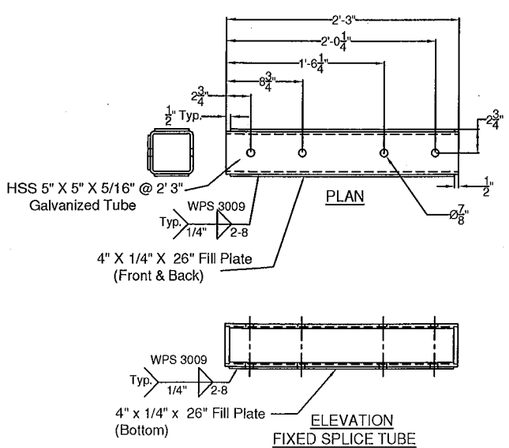

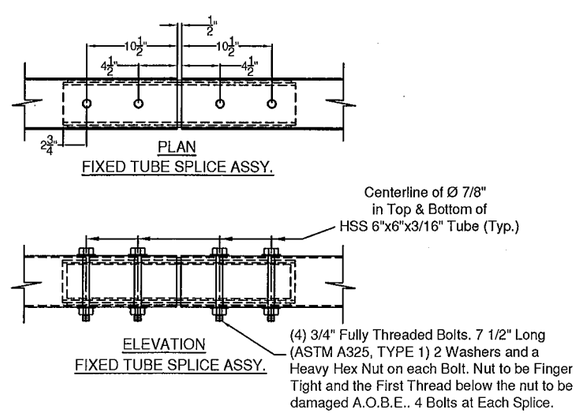

(ITEM # 7)

SPLICE TUBE - FIXED

Vermont Agency of Transportation
RECEIVED
ON: January 7, 2016
and Checked for
CONFORMANCE
BY: Rob Young DATE: 01/14/2016

APPROVED: Approval of drawings and/or procedures indicates concurrence with the information presented and does not relieve the Contractor or Fabricator of compliance with all specifications and code requirements	X	Stantec
APPROVED AS NOTED		
REVISE AND RESUBMIT		
NOT REVIEWED		
Date: 1/13/16		
By:		

This review by Stantec Consulting Services Inc. is for the sole purpose of ascertaining conformance with the general design concept. This review shall not mean that Stantec Consulting Services Inc approves the detail design inherent in the shop drawings, responsibility for which shall remain with the Contractor. Submitting same, and such review shall not relieve the Contractor of his responsibility for errors or omissions in the shop drawing or of his responsibility for meeting all requirements of the Contract Documents. The contractor is responsible for dimensions to be confirmed and correlated at the job site, for information that pertains solely to the fabrication processes or to techniques of construction and installation and for coordination of the work of all subtrades.

ITEM #: 621.725

SHEET 5 OF 5

STRUCTURAL STEEL TO COMPLY W/ ASTM A6

TOLERANCE UNLESS OTHERWISE NOTED:
FRACTIONS = ± 1/16"
ANGLES = ± 1/2°
DIAMETERS = ± 1/32"

GUARD RAIL TO BRIDGE RAIL TRANSITION DETAILS SHEET

VERMONT ROUTE 106 (MAJOR COLLECTOR, RURAL), BRIDGE # 24
TOWN OF WOODSTOCK, COUNTY OF WINDSOR, VT.

REV	NO.	DATE	DESCRIPTION	BY	REV	NO.	DATE	DESCRIPTION	BY
	1	12/29/15	Revised Per 12/18/15 Markup	E.P.					

ELDERLEE, INC.
OAKS CORNERS, NEW YORK 14518
email: dlong@elderlee.com / epeek@elderlee.com
Tel: 315-789-6670 Fax: 315-789-6615

AISC CERTIFIED FABRICATOR

ORTHOGRAPHIC PROJECTION

DRAWN	E.P.	11/30/15
CHECKED	D.L.	11/30/15
APPROVED	.	.
SCALE	SCHEMATIC	
DRAWING NO.	F.R. LaFAYETTE-WOODSTOCK (21)	

WELDING PROCEDURE SPECIFICATION

PQR ELDERLEE#3

Material Specification	A500 GR B to A572 GR 50
Welding Process	FCAW-G
Manual or Machine	SEMAUTOMATIC
Position of Welding	FLAT/HORIZONTAL
Filler Metal Specification	A5.29
Filler Metal Classification	E81T1-Ni1C-JH4
Flux	N/A
Shielding Gas	CO 2 Dew Point -40DEG F Flow Rate 50CFH
Single or Multiple Pass	SINGLE
Single or Multiple Arc	SINGLE
Welding Current	DC
Polarity	REVERSE ELECTRODE POSITIVE
Welding Progression	STRINGER
Root Treatment	PER D1.5
Preheat and Interpass Temperature	PER D1.5
Postheat Temperature	NONE
Heat Input	Min Max

Vermont Agency of Transportation

RECEIVED

Woodstock BRF 0151 (21) - Rail Shop Drawing Submittal - Rev 1_ReviewedBySlantec_Approved.pdf

CK'D BY OK'D BY Rob Young

January 7, 2016

RESUBMIT No Approved

BY Rob Young DATE 01/14/2016

WELDING PROCEDURE

Pass no.	Electrode size	Welding Current Amperes	Welding Current Volts	Travel speed	Joint detail
1	1/16	310	25	11	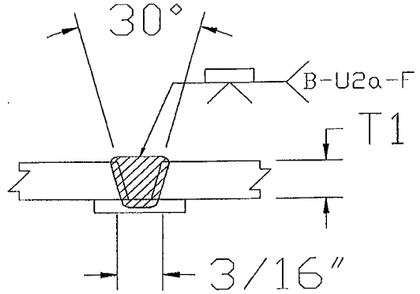
Variable	LIMITS	341 TO 269	27 TO 23	12 TO 10	

This procedure may vary due to fabrication sequence, fit-up, pass size, etc., within the limitation of variables given in Section 5.

Procedure No. 3007

Revision No.

Contractor Elderlee, Inc.

Authorized By RANDY SCOTT

Date 12/14/2015

WELDING PROCEDURE SPECIFICATION

PQR ELDERLEE #3

Material Specification	A709 TO A500 GR B
Welding Process	FCAW-G
Manual or Machine	SEMAUTOMATIC
Position of Welding	FLAT/HORIZONTAL
Filler Metal Specification	A5.29
Filler Metal Classification	E81T1-Ni1C-JH4
Flux	N/A
Shielding Gas	CO 2 Dew Point -40DEG F Flow Rate 50CFH
Single or Multiple Pass	SINGLE
Single or Multiple Arc	SINGLE
Welding Current	DC
Polarity	REVERSE ELECTRODE POSITIVE
Welding Progression	STRINGER
Root Treatment	D1.5
Preheat and Interpass Temperature	D1.5
Postheat Temperature	NONE
Heat Input	Min Max

WELDING PROCEDURE

Pass no.	Electrode size	Welding Current Amperes	Welding Current Volts	Travel speed	Joint detail
1	1/16	310	25	11	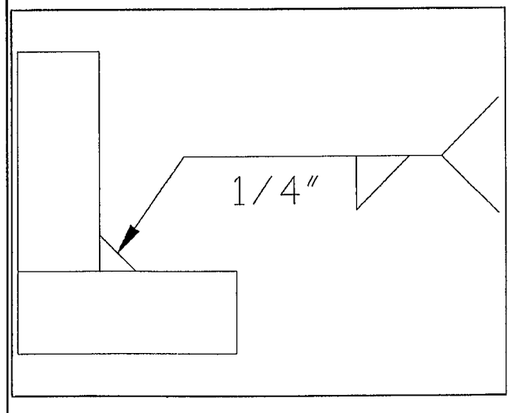
Variable	LIMITS	341 TO 269	27 TO 23	12 TO 10	

This procedure may vary due to fabrication sequence, fit-up, pass size, etc., within the limitation of variables given in Section 5.

Procedure No. 3009

Revision No.

Contractor Elderlee, Inc.

Authorized By RANDY SCOTT

Date 3/20/2014

Vermont Agency of Transportation
RECEIVED
Woodstock BRF 0151 (21) - Rail Shop Drawing Submittal - Rev 1_ReviewedBySlantec_Approved.pdf
CK'D BY OK'D BY Rob Young
January 7, 2016
RESUBMIT No Approved
BY Rob Young DATE 01/14/2016

WELDING PROCEDURE SPECIFICATION

PQR ELDERLEE #3

Material Specification	A500 TO A572 GR 50
Welding Process	FCAW-G
Manual or Machine	SEMAUTOMATIC
Position of Welding	FLAT/HORIZONTAL
Filler Metal Specification	A5.29
Filler Metal Classification	E81T1-Ni1C-JH4
Flux	N/A
Shielding Gas	CO 2 Dew Point -40DEG F Flow Rate 50CFH
Single or Multiple Pass	SINGLE
Single or Multiple Arc	SINGLE
Welding Current	DC
Polarity	REVERSE
Welding Progression	STRINGER
Root Treatment	PER D1.5
Preheat and Interpass Temperature	PER D1.5
Postheat Temperature	NONE
Heat Input	Min Max

Vermont Agency of Transportation

RECEIVED

Woodstock BRF 0151 (21) - Rail Shop Drawing Submittal - Rev 1_ReviewedBySlantec_Approved.pdf

CK'D BY OK'D BY Rob Young

January 7, 2016

RESUBMIT No Approved

BY Rob Young DATE 01/14/2016

WELDING PROCEDURE

Pass no.	Electrode size	Welding Current Amperes	Welding Current Volts	Travel speed	Joint detail
1	1/16	310	25	11	
Variable	LIMITS	341 TO 269	27 TO 23	12 TO 10	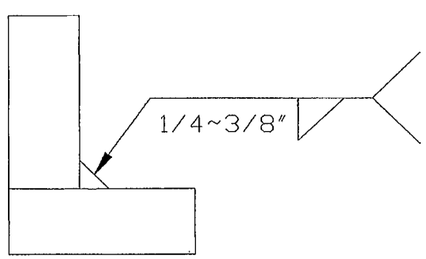

This procedure may vary due to fabrication sequence, fit-up, pass size, etc., within the limitation of variables given in Section 5.

Procedure No. 3016

Revision No.

Contractor Elderlee, Inc.

Authorized By RANDY SCOTT

Date 8/4/2014

WELDING PROCEDURE SPECIFICATION

Material Specification	A572 GR 50
Welding Process	GMAW
Manual or Machine	SEMIAUTOMATIC/ROBOTIC
Position of Welding	FLAT/HORIZONTAL
Filler Metal Specification	A5.18
Filler Metal Classification	L-56 LINCOLN
Flux	N/A
Shielding Gas	90% ARGON /10% CO2 Dew Point -40DEG F Flow Rate 45CFH
Single or Multiple Pass	SINGLE
Single or Multiple Arc	SINGLE
Welding Current	DC
Polarity	REVERSE
Welding Progression	STRINGER
Root Treatment	PER D1.5
Preheat and Interpass Temperature	PER D1.5
Postheat Temperature	NONE
Heat Input	Min _____ Max _____

Vermont Agency of Transportation
RECEIVED
Woodstock BRF 0151 (21) - Rail Shop Drawing Submittal - Rev 1_ReviewedBy Stantec_Approved.pdf
CK'D BY _____ OK'D BY Rob Young
January 7, 2016
RESUBMIT No Approved
BY Rob Young DATE 01/14/2016

WELDING PROCEDURE

Pass no.	Electrode size	Welding Current Amperes	Welding Current Volts	Travel speed	Joint detail
	.045	190	22	19	
Variable	LIMITS	171 TO 209	20 TO 24	17 TO 21	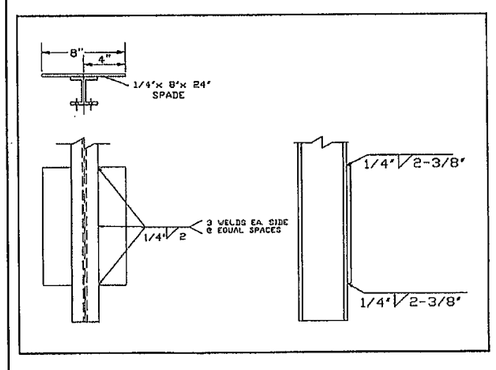

This procedure may vary due to fabrication sequence, fit-up, pass size, etc., within the limitation of variables given in Section 5.

Procedure No. 3022
Revision No. _____

Contractor Elderlee, Inc.
Authorized By RANDY SCOTT
Date 3/20/2014