Modern Protective Coatings, Inc.
Containment Plan Narrative
Dated February 16, 2015
Revised on April 8, 2015

Vermont Agency of Transportation
RECEIVED
CK'D BY P McDonald OK'D BY D Bonneau
April 8, 2015
RESUBMIT No Approved AsNoted
BY D Bonneau DATE 04/22/15

Project Name: Waterbury
Project Number: Vermont Agency of Transportation Project # VT IM 089-2 (43)
Project Description: Cleaning and Painting Bridge Ends and Pier Diaphragms
Competent Person: Joe Kenney
Back-up Competent Person: Scott Roystan and/or Chris Roystan

Contact Information:

Office:	**(603) 594-3722**	
Joe Kenney	**Cell (603) 455-6393**	**Home (603) 648-2942**
Scott Roystan	**Cell (603) 620-0261**	**Home (603) 881-3018**
Chris Roystan	**Cell (603) 620-0262**	**Home (603) 595-1609**
Resident Engineer, Tom Mancini	**Cell (802) 279-0558**	**Trailer (802) 241-1451**

Agency Hazardous Waste Coordinator, Andy Shively (802) 282-2797
Beck and Bellucci Superintendent, Louie Menard (603) 455-0754 Trailer (802) 241-1451

Containment Plan

The General Contractor, Beck and Bellucci, will install pier brackets and a wooden deck for a containment floor. We will utilize vacuum-blast abrasive blasting equipment with vacuum heads creating a seal to the steel to contain spent abrasive and existing coatings. This "collection of debris from the surface at the point of cleaning (SSPC Guide 6 section 4.1.2)" will be accomplished by the vacuum head which is the containment for this method. The ventilation is therefore accomplished by the vacuum recovery system which is part of the equipment (see technical data sheet for the VBS 2400). In combination with the solid floor surface provided by the General Contractor, these materials and equipment meet the design specifications of SSPC class 1A containment (shown in note 6 at the bottom of the SSPC-Guide 6 Standard, Table A).

The scope of work involves total removal of existing lead based coatings only in the areas where new diaphragms are to be installed. Grit load will be almost nothing as the spent abrasive will be continuously vacuumed back to the recycler by the vacuum shrouded head of the tool.

The containment will not require lighting as there it will be open to the sun-light above due to the deck being removed prior to our work.

Lighting shall be provided at the discretion of the Engineer or designated Inspector to aide in inspection and QA efforts.

RAPID PREP LLC

SURFACE PREPARATION EQUIPMENT RENTALS, SALES & SERVICE

VB2400 Abrasive Blast & Recovery System

VB2400 Technical Data:

Air Consumption:

- Blast Pot — 325 cfm per #7 blast nozzle
- Vacuum — 275 cfm per Jet Vac Pump

Dust Collector:

- Filter Type — Cartridge closed one end
- Number of filters — Four
- Air to Cloth Ratio — 1.5 to 1

Blast Pot:

- # of outlets — three
- Valve type — Thompson II Valves
- Capacity — 35 cu./ft.
- Deadman — three electric (12V)

Storage Hopper:

- Capacity — 35 cu./ft.
- Vacuum inlet — 4”

Vacuum System:

- Number of Jet Vacs — Two
- Vacuum performance: 1400 cfm @18”HG

Dimensions:

- Height — 10’2”
- Width — 4’
- Length — 10’5”
- Weight — 5,000 lbs.

Electrical Controls: 110VAC

How They Work

Designed for contained open blasting, the VB2400 system blast abrasive through three blasting outlets onto the surface being finished. Our high powered vacuum units, recover the spent abrasive where the dust and waste are separated . The used abrasive is recycled and returned to the storage hopper for re-use.

Dust Free Vacuum Blasting or Contained Open Blasting

This powerful system provides maximum worker protection...continuously recycles abrasive...separates the dust...and delivers high productivity. The result? Safe and extremely cost effective decontamination and surface preparation.

SALES & SERVICE CENTER LOCATIONS:
JOHNSTON, RI - CHESAPEAKE, VA– CHULA VISTA, CA- Lakewood, WA
(877) 529-2124 www.rapidprep.com

Vermont Agency of Transportation
RECEIVED
CK'D BY P McDonald OK'D BY D Bonneau
April 8, 2015
RESUBMIT No Approved AsNoted
BY D Bonneau DATE 04/22/15

Modern Protective Coatings, Inc.
Waste Management Plan Narrative
Dated February 16, 2015

Project Name: Waterbury
Project Number: Vermont Agency of Transportation Project # VT IM 089-2 (43)
Project Description: Cleaning and Painting Bridge Ends and Pier Diaphragms
Competent Person: Joe Kenney
Back-up Competent Person: Scott Roystan and/or Chris Roystan

Contact Information:

Office:	**(603) 594-3722**	
Joe Kenney	**Cell (603) 455-6393**	**Home (603) 648-2942**
Scott Roystan	**Cell (603) 620-0261**	**Home (603) 881-3018**
Chris Roystan	**Cell (603) 620-0262**	**Home (603) 595-1609**
Resident Engineer, Tom Mancini	**Cell (802) 279-0558**	**Trailer (802) 241-1451**

Agency Hazardous Waste Coordinator, Andy Shively (802) 282-2797
Beck and Bellucci Superintendent, Louie Menard (603) 455-0754 Trailer (802) 241-1451

Waste Management Plan

To satisfy the requirements of this section, refer to the Modern Protective Coatings' site specific Environmental Compliance and Waste Management Plan. Hazardous waste will be stored on site, in a locked container box and disposed of by a licensed transporter, at a licensed Treatment, Storage, and Disposal (TSD) facility.

Non-hazardous waste will be transported by Modern Protective Coatings, and disposed of at our shop facilities.

Permits

A copy of the Vermont Department of Health site specific Lead Abatement Permit will be provided as soon as we receive it.

Also provide EPA ID# for hazardous waste disposal issued by ANR.

THE SHERWIN-WILLIAMS COMPANY
INDUSTRIAL & MARINE COATINGS

HangTuf™ Containment TARPS

CN-1 FR Coated 6.5 oz. |Class: 1,2,&3

Material Type	Airbag
Thread Count Per Inch	41x41
Weave	Plain
Thickness	14 mils
Weight Coated	6.5 oz./yd.2
Tensile Strength ASTM D-5034-5 | Grab Method	Warp: 535 lbs. Fill: 507 lbs.
Tear Strength ASTM D-4533-91 | Trap Method	Warp: 151 lbs. Fill: 122 lbs.
Burst Strength ASTM D-3786 | Mullen	1,050 PSI
Flame Resistance	FMVSS 302 PASS

Physical Tests are Based on Uncoated Fabrics. These Values are Typical Data and are not Intended as Limiting Specifications.

- Custom Designs Available
- Standard Sizes in Deluxe Construction Available
- Grommet Spacing: To Customer Spec (Standard Every 2 ft.)
- Hem & Seam Construction: Heat Sealed or Double Stitched
- 2" Nylon Webbing Reinforcment for Stiched Hems & Seams
- Priced By Square Foot

Manufactured exclusively for

THE SHERWIN-WILLIAMS COMPANY

Industrial & Marine Coatings Division

by:

Polytuf Brands, Inc.

P.O. Box 3079 • Cuyahoga Falls, Ohio 44223-9998
Phone: 330-773-0184 • 1-888-POLYTUF (765-9883)
Fax: 330-773-0390 • www.polytuf.com
e-mail: containment@polytuf.com

HangTuf™ Containment TARPS

Containment for bridges, watertowers, shipyards and YOUR project!

• Right Fabrics • Right Spec • Right On Time

Features

- Lightweight materials
- Easy to handle
- Wide variety of materials available
- Water repellent, solvent resistant & UV stabilized
- Exceptional strength

Benefits

- Provides a controlled work environment
- Contains blasting media, paint and debris
- Aides in reducing clean-up expenses
- Class 1, 2, 3 and 4 Compliant

Manufactured exclusively for

THE SHERWIN-WILLIAMS COMPANY

Industrial & Marine Coatings Division

by:

Polytuf® Brands, Inc.

P.O. Box 3079 • Cuyahoga Falls, Ohio 44223-9998
Phone: 330-773-0184 • 1-888-POLYTUF (765-9883)
Fax: 330-773-0390 • www.polytuf.com
e-mail: containment@polytuf.com

IPEC WANTS TO CLEAR THE AIR ON DUST COLLECTION...

INTRODUCING THE 30,000 CFM DUST COLLECTOR FROM IPEC.

- Higher productivity
- Ease of Maintenance
- Lower operating costs
- Improves visibility

Announcing IPEC's largest dust collector, fully equipped to handle the largest and most demanding projects in the industry • Able to ventilate both blasting dust and painting fumes • The most horse power and largest blower available in the industry which allows the contractor to ventilate efficiently through long lengths of flexible ducting • Only system capable of meeting all ventilation requirements with a filtration rate of 99.95% of particulate .5 microns and larger • The IPEC 30,000 CFM dust collector — clearly the best in the industry.

For more information on this exciting new dust collector call IPEC today!

ipec
Advanced Systems, Inc.

200 Whitehall Street
Providence, RI 02909
Tel: 401-944-7600
Fax: 401-944-7741
1-800-822-4732

The World's Best Blasting Equipment"

ipec
ADVANCED SYSTEMS, INC.

30,000 CFM Dust Collector

SPECIFICATIONS

Air rate per unit	30,000 CFM @ 16" Wg
Efficiency	99.9% @ .5 microns
Type of dust collector	Reverse Pulse Jet
Type of filter elements	Cartridge type side access externally removable
Number of cartridges	42
Filter media area	10,000 sq. ft.
Air-to-cloth ratio	2.9:1
Ducting connections	4-20" diameter
Arrangement of cartridges	Horizontal
Fan conditions	Spark resistant type C, class IV blower Non-over loading variable speed
Type of drive	Banded V-belt driven with clutch
Type of engine	Water cooled diesel, 115 peak Hp @ 2400 RPM 103 Hp continous
Air required / total	76 cfm @ 90 psi
Fuel tank	74 gal. 12.9 hour capacity
Product conveyor	Screw conveyor empties into 55 gal. drums
Conveyor drive	1 Hp air motor/optional electric 110V AC
Skid mounted	22'L x 8'W x 13'6"H — 11,000 lbs.
Trailer mounted	30'L x 8'6"W x 13'6"H — 10 tons DOT approved dual axle electric brakes, pintle hitch
Electrical	12V DC controls

T-Plus Scaffold Sheeting

T-Plus is the ultimate in scaffold sheeting. Made of reinforced 10 mil thick low density polyethylene (LDPE), T-Plus has a 1500 denier scrim, making it extremely durable, yet manageable and easy to use.

Like all Monarflex® sheeting products, T-Plus features the internationally patented Monarflex® grommet system. T-Plus sheeting has been designed to conform to all U.S. standard scaffold configurations.

T-Plus is designed to withstand high winds, and can be used in temperatures ranging from -40° (F) to +140° (F). The versatility and durability of T-Plus, combined with its environmental qualitie has established T-Plus as a market leader in many countries over the last 20 years.

T-Plus is the ideal material for projects requiring full containment, including steel structure maintenance involving blasting and painting, as well as general construction projects.

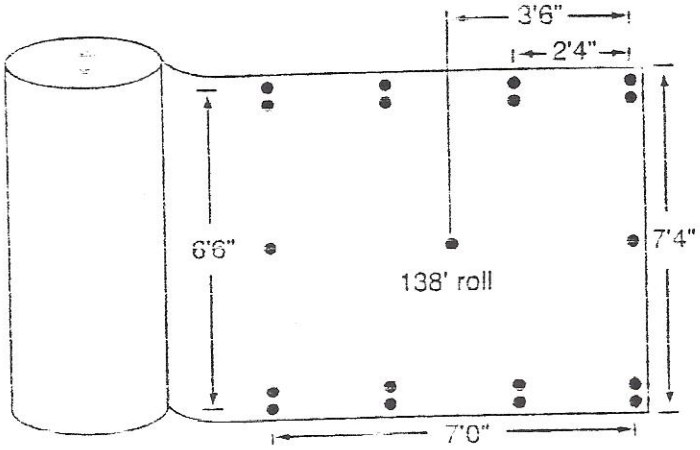

Approximate dimensions

TECHNICAL DETAILS

Composition: LDPE reinforced with 1500 denier polyester yarn

Roll Size: 7'4" x 138'

Roll Weight: 67 lbs.

Thickness: 10 mil

Scrim: 1500 denier

Color: Clear

Usable in Temperatures: -40° (F) to +140° (F)

Light Transmitting: 90%

UV Resistance: Maximum UV resistance

Tensile Strength: 10KN/M

Monarflex®
PROTECTION SYSTEM

Monarflex, Inc
80 Pine Street, Peterborough, NH 03-
Phone: 800-225-7704 or 603-924-42
Fax: 603-924-2179

Reverse of leaflet contains Product Liability Clause

RAPID PREP LLC

Call us at **877-529-2124**
www.rapidprep.com

COMPRESSED AIR DRYING SYSTEMS

FEATURES

- Eliminates flash rusting, clogged blast pots and downtime
- Small footprint
- Complete portability with steel skid forklift channels and lifting lugs
- Low pressure drop
- Operates with compressed air temperatures up to 250°F
- 250 through 1600 SCFM standard systems
- 10 year vessel warranty
- Air motor includes filter, regulator, lubricator and muffler
- Epoxy internal dryer coating for long vessel life
- Optional pneumatic demand drain prevents air loss
- Downstream particulate filter with permanent stainless steel mesh
- Two dryer sight windows for desiccant level viewing

FD-1600

FD-400

FD-250

RAPID PREP LLC

Call us at **877-529-2124**
www.rapidprep.com

COMPRESSED AIR DRYING SYSTEMS

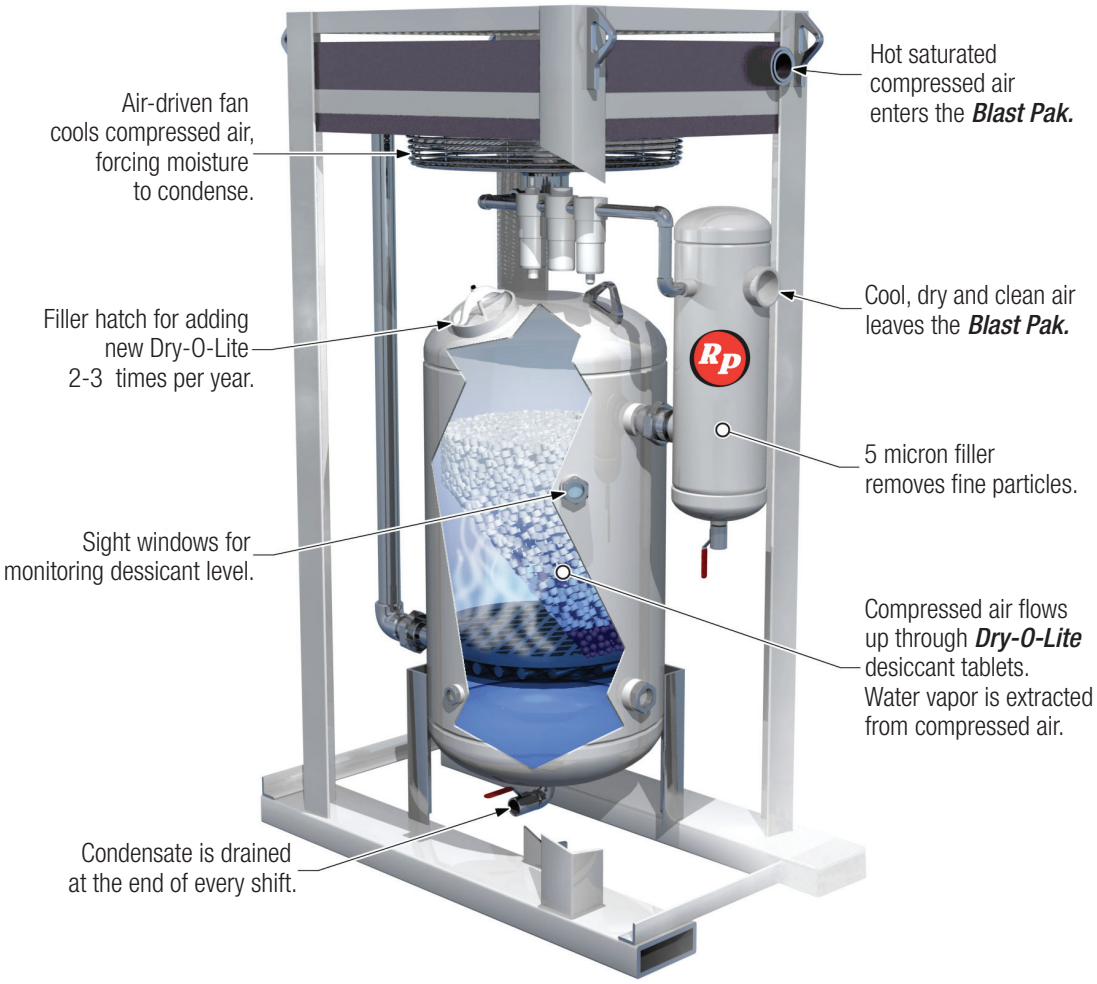

	FD-250	FD-400	FD-800	FD-1200	FD-1600
PART NUMBER	80-1456	80-1430	80-1431	80-1416	80-1347
HEIGHT	77"	77"	83-3/4"	88"	94-1/2"
INLET HEIGHT	71-9/16"	72-1/8"	78-3/8"	82-5/8"	89-3/8"
DEPTH	27"	26"	32-7/8"	32-7/8"	43"
OUTLET HEIGHT	58-1/2"	58-9/16"	59-1/2"	60"	59-1/8"
WIDTH	48"	49"	54"	60"	71-1/2"
INLET SIZE	1-1/2" NPT (F)	2" NPT (F)	2-1/2" NPT (F)	2-1/2" NPT (F)	3" NPT (F)
OUTLET SIZE	1-1/2" NPT (F)	2" NPT (F)	2-1/2" NPT (F)	3" NPT (F)	3" NPT (F)
WEIGHT	660 lbs	760 lbs	1155 lbs	1525 lbs	1875 lbs
AIR MOTOR SCFM	17	25	70	70	150