Transmittal

Stantec Consulting Services Inc.
55 Green Mountain Drive
South Burlington VT 05403
Tel: (802) 864-0223
Fax: (802) 864-0165

To:	Douglas E. Bonneau, P.E.	From:	Thomas Knight
Company:	VTrans	☐	For Your Information
Address:	Douglas.Bonneau@state.vt.us	☐	For Your Approval
Phone:	(802) 828-3874	☐	For Your Review
Date:	November 3, 2014	☑	As Requested
File:	Waterbury IM 089-2(43) - 195310438		
Delivery:	Electronic		

Reference: **Bridge Bearing Fabrication Drawings.**

Attachment:

Copies	Doc Date	Pages	Description
1	10/28/2014	8	46 N/S and 46A Elastomeric Bearing Shop Drawings - resubmittal

Status:

- 46 N/S and 46A Elastomeric Bearing Fab. Dwgs – **Revises As Noted, Resubmission not required on sheet 7. Sheets 1-6 and 8 – No Exception Taken.**

STANTEC CONSULTING SERVICES INC.

Tom Knight
Sr. Structural Engineer
Phone: (802) 497-6409
Fax: 802-864-0165
tom.knight@stantec.com

GENERAL NOTES

1. ALL BEARINGS SHALL CONFORM TO THE STATE OF VERMONT AGENCY OF TRANSPORTATION STANDARD SPECIFICATIONS, 2011 EDITION, SECTIONS 531 AND 731 AND THE CONTRACT PRINTS, UNLESS NOTED OTHERWISE.

2. MATERIALS:
   - ELASTOMER.....60 ± 5 DURO NATURAL, GRADE 4 SHEAR MOD 130-175 psi
   - CARBON STEEL SHIMS.....ASTM A1011, GR. 40
   - STAINLESS STEEL.....ASTM A240 TYPE 304 #8 FINISH
   - PLATES.....ASTM A36
   - PTFE.....VIRGIN UNFILLED

3. TOLERANCES:
   - PADS:
     - OVERALL THICKNESS (VERTICAL) 1 1/4" OR LESS.....-0, +1/8"
     - OVERALL THICKNESS (VERTICAL) OVER 1 1/4".....-0, +1/4"
     - OVERALL LENGTH & WIDTH (HORIZONTAL) 36" OR LESS.....-0, +1/4"
     - OVERALL LENGTH & WIDTH (HORIZONTAL) OVER 36".....-0, +1/2"
     - THICKNESS OF INDIVIDUAL LAYERS OF ELASTOMER.....±1/8"
       - PARALLELISM:
       - TOP.....0.005 rad
       - SIDES.....1/4"
     - EDGE COVER.....-0, +1/8"
     - HOLE/SLOT SIZE.....±1/8"
     - HOLE/SLOT POSITION.....±1/8"
   - PLATES:
     - OVERALL THICKNESS (VERTICAL).....±1/16"
     - OVERALL LENGTH & WIDTH (HORIZONTAL).....±1/4"
     - FLATNESS.....0.001 X NOM
     - BEVEL SLOPE.....±0.002 rad
   - PTFE:
     - OVERALL THICKNESS (VERTICAL).....-0, .030
     - OVERALL LENGTH & WIDTH (HORIZONTAL).....-0, +1/16"
   - STAINLESS STEEL:
     - OVERALL THICKNESS (VERTICAL).....-0, +1/8"
     - OVERALL LENGTH & WIDTH (HORIZONTAL).....-0, +1/16"
     - FLATNESS.....0.001 X NOM

4. MARKINGS:
   EACH BEARING SHALL BE PERMANENTLY MARKED IN A LOCATION THAT IS VISIBLE WHEN THE DEVICE IS INSTALLED IN THE COMPLETED STRUCTURE. MARKING SHALL BE SEP STANDARD:
   - CONTRACT/ORDER #
   - LOT#
   - BEARING ID # (MK. #)
   - LOCATION/BRIDGE #
   - ELASTOMER TYPE AND GRADE
   - ORIENTATION (WHERE APPLICABLE)

5. TESTING: PER SPECIFICATIONS CITED IN GENERAL NOTE #1.

6. PAINT/FINISH: EXTERNAL PLATES AND HARDWARE HOT DIP GALVANIZED PER ASTM A123 OR ASTM A153 AS APPLICABLE.

7. REPRESENTATIVE
   - CUSTOMER SERVICE: STEVE BOWMAN.....903-677-4318
   - TECHNICAL: MIKE SPELLMAN.....903-677-4342

REVISIONS			
REV.	DESCRIPTION	BY	DATE
A	SUBMITTAL	AL	9/17/2014
B	RE-SUBMITTAL - CHANGES PER MARK-UPS DATED 9/26/14	AL	10/28/2014

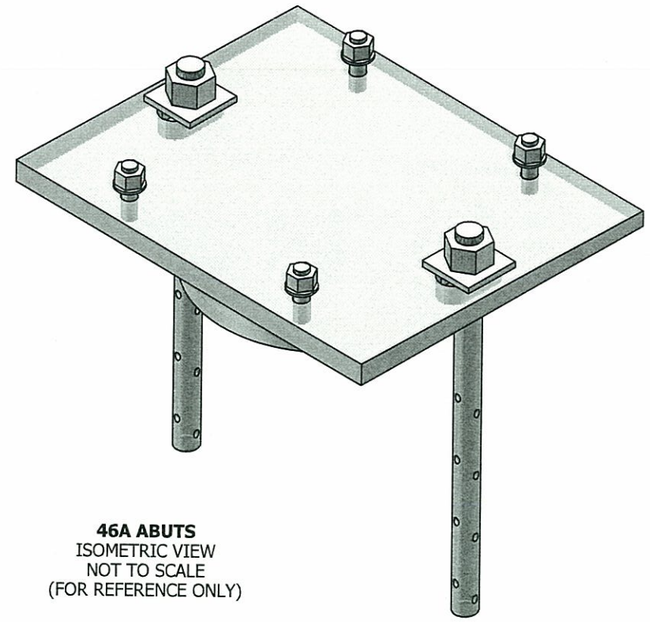

46A ABUTS
ISOMETRIC VIEW
NOT TO SCALE
(FOR REFERENCE ONLY)

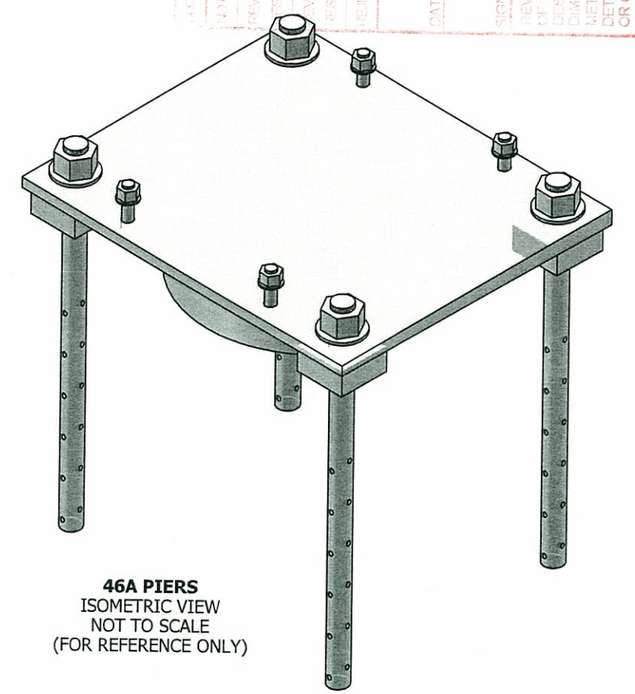

46A PIERS
ISOMETRIC VIEW
NOT TO SCALE
(FOR REFERENCE ONLY)

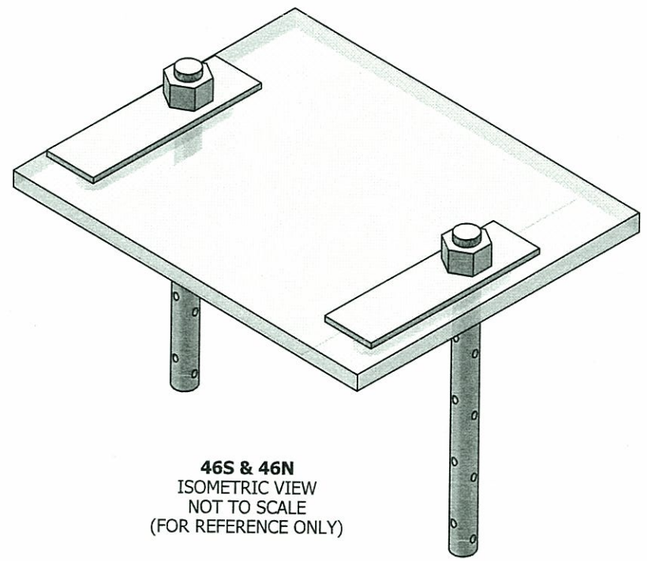

46S & 46N
ISOMETRIC VIEW
NOT TO SCALE
(FOR REFERENCE ONLY)

APPROVED
By Douglas Bonneau at 8:09 am, Nov 05, 2014

APPROVED WITH MARKS AS NOTED. NO RESUBMITTAL REQUIRED
APPROVED AS NOTED
REVISE AS NOTED
RESUBMISSION REQUIRED
REJECTED
DATE 11/3/14
SIGNATURE
REVIEW BY STANTEC IS FOR THE SOLE PURPOSE OF ASCERTAINING GENERAL CONFORMITY WITH DESIGN. CONTRACTOR IS RESPONSIBLE FOR DIMENSIONS, FABRICATION AND CONSTRUCTION METHODS, COORDINATION OF SUB-TRADES, DETAIL DESIGN OF COMPONENTS, AND ERRORS OR OMISSIONS ON SHOP DRAWINGS.

Seismic Energy Products, Inc.
STRUCTURAL BEARINGS FOR BRIDGES & BUILDINGS
ATHENS, TX PHONE: 903-675-8571

BEARING ASSY FOR:
STATE OF VERMONT AGENCY OF TRANSPORTATION

INTERSTATE 89 OVER STOWE ST & THATCHER BROOK

BRIDGES 46A, 46N & 46S	CONTRACTOR: BECK & BELLUCCI INC		
PROJECT NO. IM 089-2(43)	DRAWN ALUTTRELL	DATE 8/25/14	PO # SIGNED QT
TOWN WATERBURY	CHECKED .	DATE .	SO NO. & ST. 60383 VT
COUNTY WASHINGTON	REVIEWED MSPELLMAN	DATE 9/10/14	SHEET 1 OF 8

REVISIONS			
REV.	DESCRIPTION	BY	DATE
A	SUBMITTAL	AL	9/17/2014
B	RE-SUBMITTAL - CHANGES PER MARK-UPS DATED 9/26/14	AL	10/28/2014

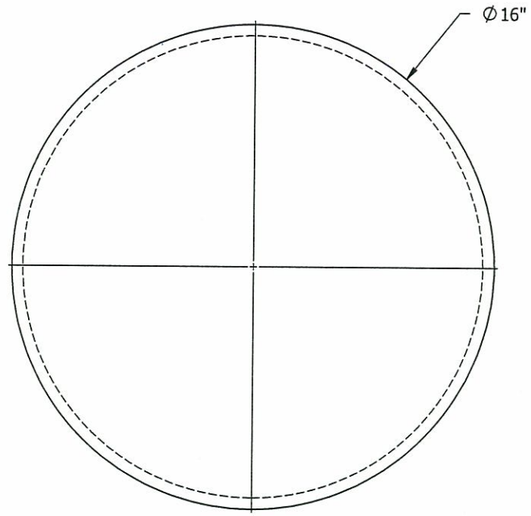

PLAN VIEW

SHOP DRAWINGS ARE REVIEWED UNLESS NOTED OTHERWISE

NO EXCEPTION TAKEN	✓
REVISE AS NOTED RESUBMISSION NOT REQUIRED	
REVISE AS NOTED RESUBMISSION REQUIRED	
REJECTED	

Stantec

DATE 11/3/14

SIGNATURE T. Kun

REVIEW BY STANTEC IS FOR THE SOLE PURPOSE OF ASCERTAINING GENERAL CONFORMITY WITH DESIGN. CONTRACTOR IS RESPONSIBLE FOR DIMENSIONS, FABRICATION AND CONSTRUCTION METHODS, COORDINATION OF SUB-TRADES, DETAIL DESIGN OF COMPONENTS, AND ERRORS OR OMISSIONS ON SHOP DRAWINGS.

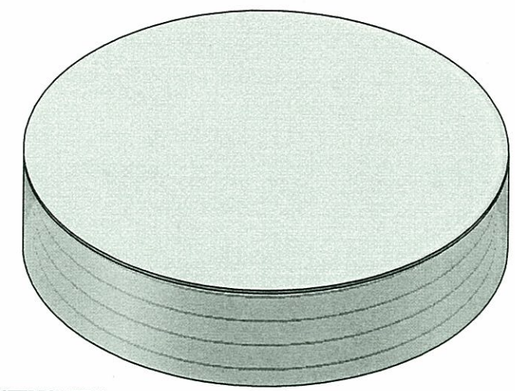

ISOMETRIC VIEW
NOT TO SCALE
(FOR REFERENCE ONLY)

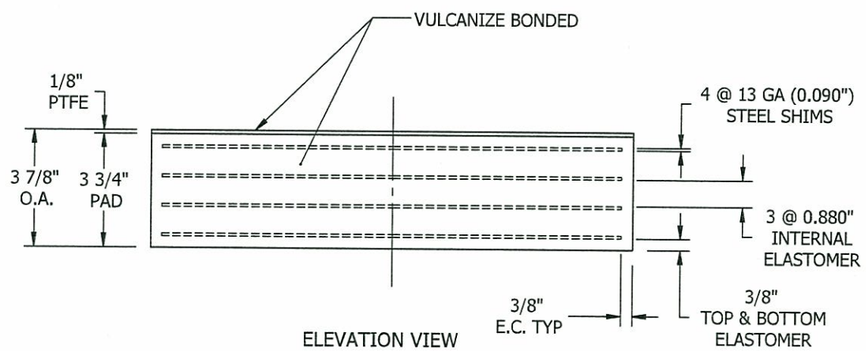

ELEVATION VIEW

MK.01
BEARING PADS
@ 46A ABUTS (531.17)
(10) REQ'D

DESIGN LOAD: 64.7 kips

APPROVED
By Douglas Bonneau at 8:09 am, Nov 05, 2014

Seismic Energy Products, Inc.
STRUCTURAL BEARINGS FOR BRIDGES & BUILDINGS
ATHENS, TX PHONE: 903-675-8571

BEARING ASSY FOR:
STATE OF VERMONT AGENCY OF TRANSPORTATION

INTERSTATE 89 OVER STOWE ST & THATCHER BROOK

BRIDGES 46A, 46N & 46S	CONTRACTOR: BECK & BELLUCCI INC		
PROJECT NO. IM 089-2(43)	DRAWN ALUTTRELL	DATE 8/25/14	PO # SIGNED QT
TOWN WATERBURY	CHECKED .	DATE .	SO NO. & ST. **60383 VT**
COUNTY WASHINGTON	REVIEWED MSPELLMAN	DATE 9/10/14	SHEET 2 OF 8

REVISIONS			
REV.	DESCRIPTION	BY	DATE
A	SUBMITTAL	AL	9/17/2014
B	RE-SUBMITTAL - CHANGES PER MARK-UPS DATED 9/26/14	AL	10/28/2014

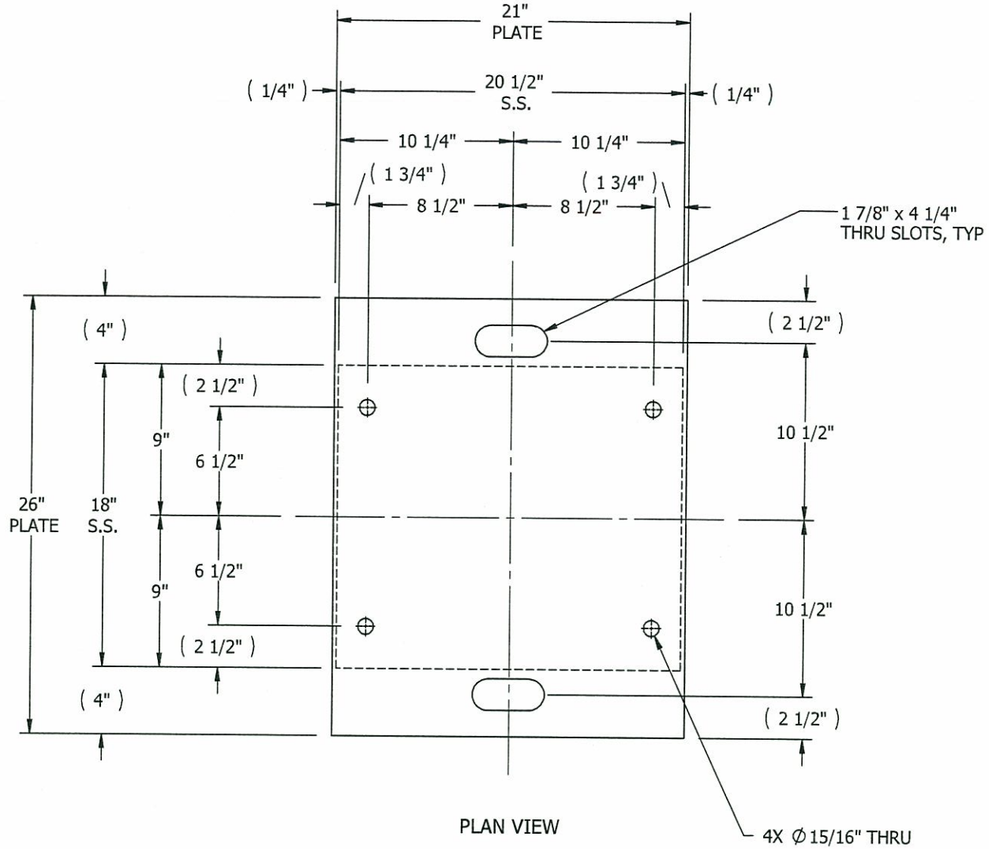

PLAN VIEW

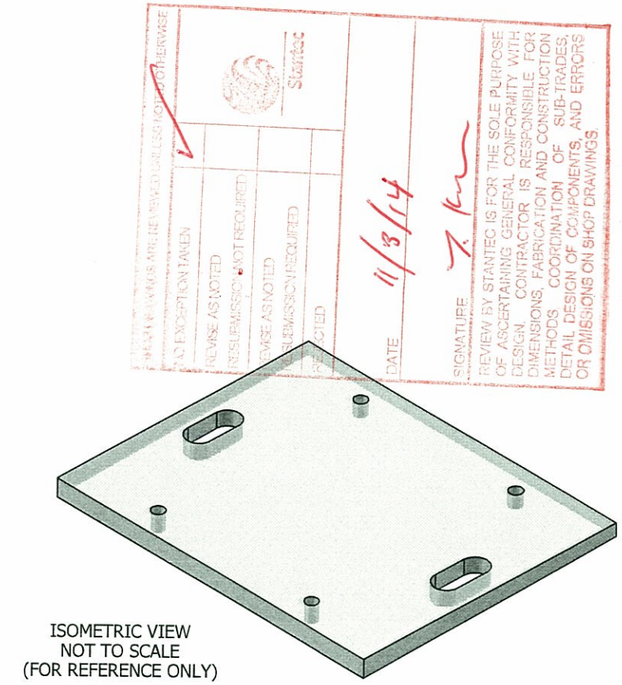

ISOMETRIC VIEW
NOT TO SCALE
(FOR REFERENCE ONLY)

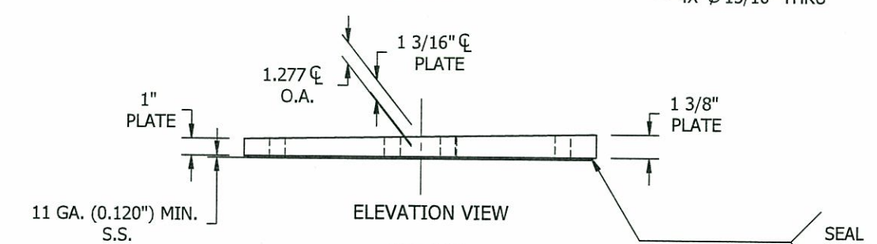

UPSTATION
---------->

MK.02A
UPPER ASSY
@ 46A ABUTMENT 1 (531.17)
(5) REQ'D

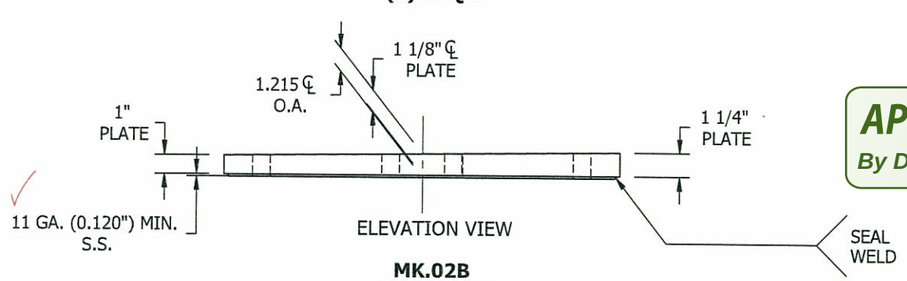

MK.02B
UPPER ASSY
@ 46A ABUTMENT 2 (531.17)
(5) REQ'D

APPROVED
By Douglas Bonneau at 8:10 am, Nov 05, 2014

SEE LAST SHEET FOR HARDWARE

Seismic Energy Products, Inc.
STRUCTURAL BEARINGS FOR BRIDGES & BUILDINGS
ATHENS, TX PHONE: 903-675-8571

BEARING ASSY FOR:
STATE OF VERMONT AGENCY OF TRANSPORTATION

INTERSTATE 89 OVER STOWE ST & THATCHER BROOK

BRIDGES 46A, 46N & 46S	CONTRACTOR: BECK & BELLUCCI INC		
PROJECT NO. IM 089-2(43)	DRAWN ALUTTRELL	DATE 8/25/14	PO # SIGNED QT
TOWN WATERBURY	CHECKED .	DATE .	SO NO. & ST. **60383 VT**
COUNTY WASHINGTON	REVIEWED MSPELLMAN	DATE 9/10/14	SHEET 3 OF 8

REVISIONS			
REV.	DESCRIPTION	BY	DATE
A	SUBMITTAL	AL	9/17/2014
B	RE-SUBMITTAL - CHANGES PER MARK-UPS DATED 9/26/14	AL	10/28/2014

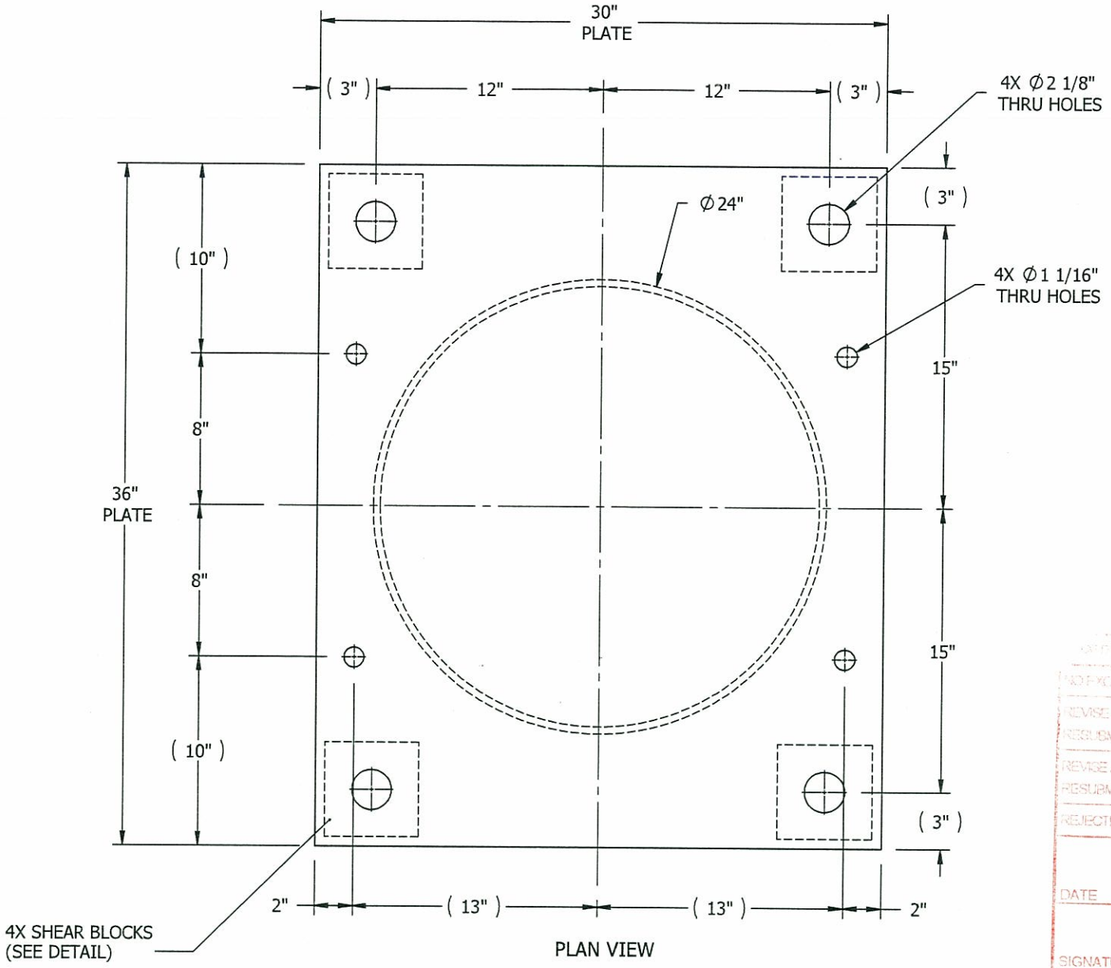

PLAN VIEW

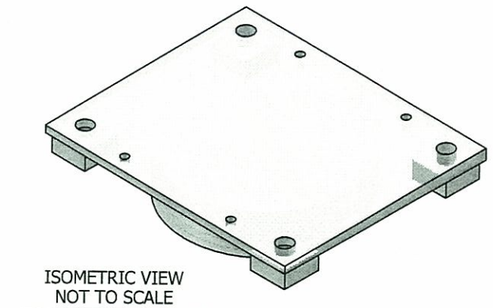

ISOMETRIC VIEW
NOT TO SCALE
(FOR REFERENCE ONLY)

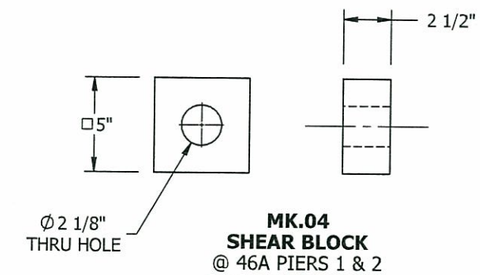

MK.04
SHEAR BLOCK
@ 46A PIERS 1 & 2
(40) TOTAL REQ'D
(4 PER ASSY)

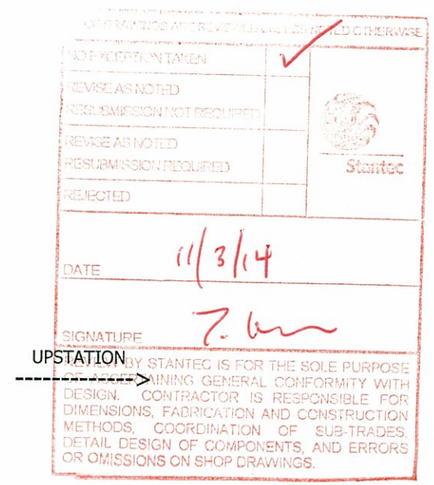

UPSTATION

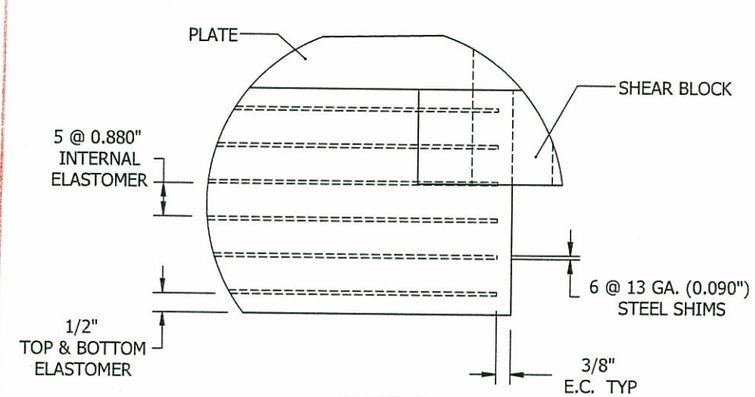

DETAIL A

SEE LAST SHEET FOR HARDWARE

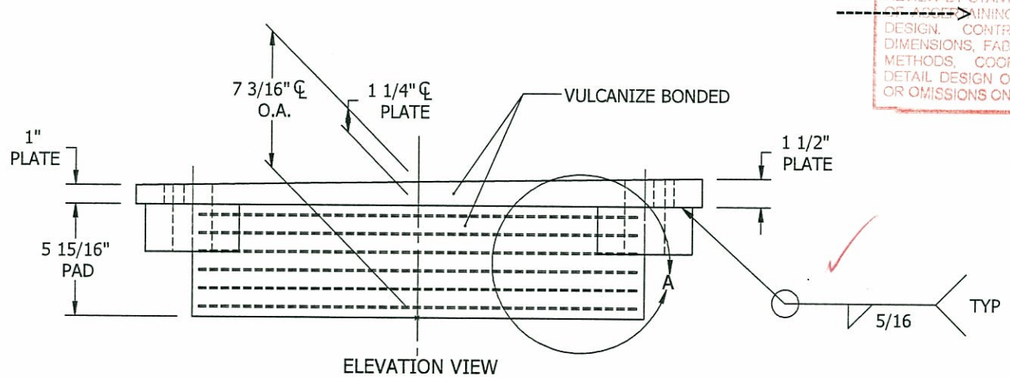

ELEVATION VIEW

MK.04
UPPER ASSY
@ 46A PIERS 1 & 2 (531.18)
(10) REQ'D

DESIGN LOAD: 298.4 kips

NOTE: SHEAR BLOCKS TO BE WELDED AFTER BONDING PLATE TO PAD FOR OPTIMUM MANUFACTURING.

OK

APPROVED
By Douglas Bonneau at 8:10 am, Nov 05, 2014

Seismic Energy Products, Inc.
STRUCTURAL BEARINGS FOR BRIDGES & BUILDINGS
ATHENS, TX PHONE: 903-675-8571

BEARING ASSY FOR:
STATE OF VERMONT AGENCY OF TRANSPORTATION

INTERSTATE 89 OVER STOWE ST & THATCHER BROOK

BRIDGES 46A, 46N & 46S	CONTRACTOR: BECK & BELLUCCI INC		
PROJECT NO. IM 089-2(43)	DRAWN ALUTTRELL	DATE 8/25/14	PO # SIGNED QT
TOWN WATERBURY	CHECKED .	DATE .	SO NO. & ST. **60383 VT**
COUNTY WASHINGTON	REVIEWED MSPELLMAN	DATE 9/10/14	SHEET 4 OF 8

REVISIONS			
REV.	DESCRIPTION	BY	DATE
A	SUBMITTAL	AL	9/17/2014
B	RE-SUBMITTAL - CHANGES PER MARK-UPS DATED 9/26/14	AL	10/28/2014

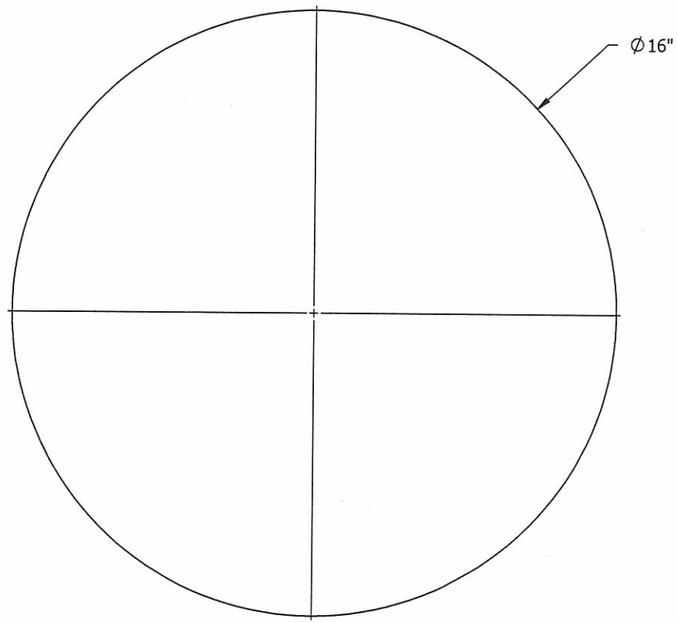

PLAN VIEW

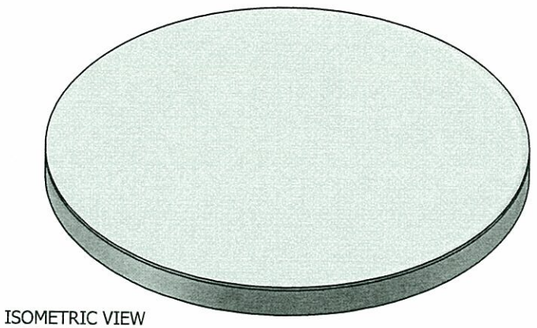

ISOMETRIC VIEW
NOT TO SCALE
(FOR REFERENCE ONLY)

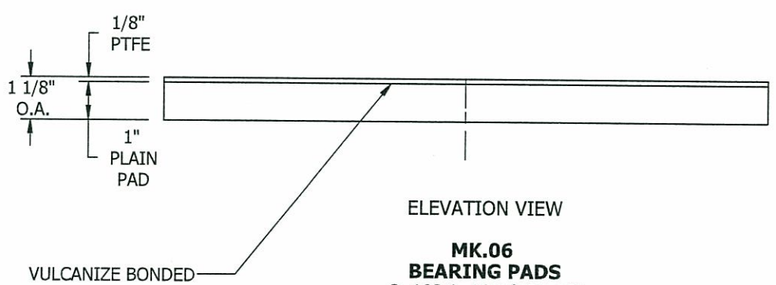

ELEVATION VIEW

MK.06
BEARING PADS
@ 46S & 46N (531.16)
(50) REQ'D

DESIGN LOAD: 70.8 kips

NO EXCEPTION TAKEN
REVISE AS NOTED
RESUBMISSION NOT REQUIRED
REVISE AS NOTED
RESUBMISSION REQUIRED
REJECTED
Stantec
DATE 11/3/14
SIGNATURE

REVIEW BY STANTEC IS FOR THE SOLE PURPOSE OF ASCERTAINING GENERAL CONFORMITY WITH DESIGN. CONTRACTOR IS RESPONSIBLE FOR DIMENSIONS, FABRICATION AND CONSTRUCTION METHODS, COORDINATION OF SUB-TRADES, DETAIL DESIGN OF COMPONENTS, AND ERRORS OR OMISSIONS ON SHOP DRAWINGS.

APPROVED
By Douglas Bonneau at 8:10 am, Nov 05, 2014

Seismic Energy Products, Inc.
STRUCTURAL BEARINGS FOR BRIDGES & BUILDINGS
ATHENS, TX PHONE: 903-675-8571

BEARING ASSY FOR:
STATE OF VERMONT AGENCY OF TRANSPORTATION

INTERSTATE 89 OVER STOWE ST & THATCHER BROOK

BRIDGES 46A, 46N & 46S	CONTRACTOR: BECK & BELLUCCI INC		
PROJECT NO. IM 089-2(43)	DRAWN ALUTTRELL	DATE 8/25/14	PO # SIGNED QT
TOWN WATERBURY	CHECKED .	DATE .	SO NO. & ST. **60383 VT**
COUNTY WASHINGTON	REVIEWED MSPELLMAN	DATE 9/10/14	SHEET 5 OF 8

REVISIONS			
REV.	DESCRIPTION	BY	DATE
A	SUBMITTAL	AL	9/17/2014
B	RE-SUBMITTAL - CHANGES PER MARK-UPS DATED 9/26/14	AL	10/28/2014

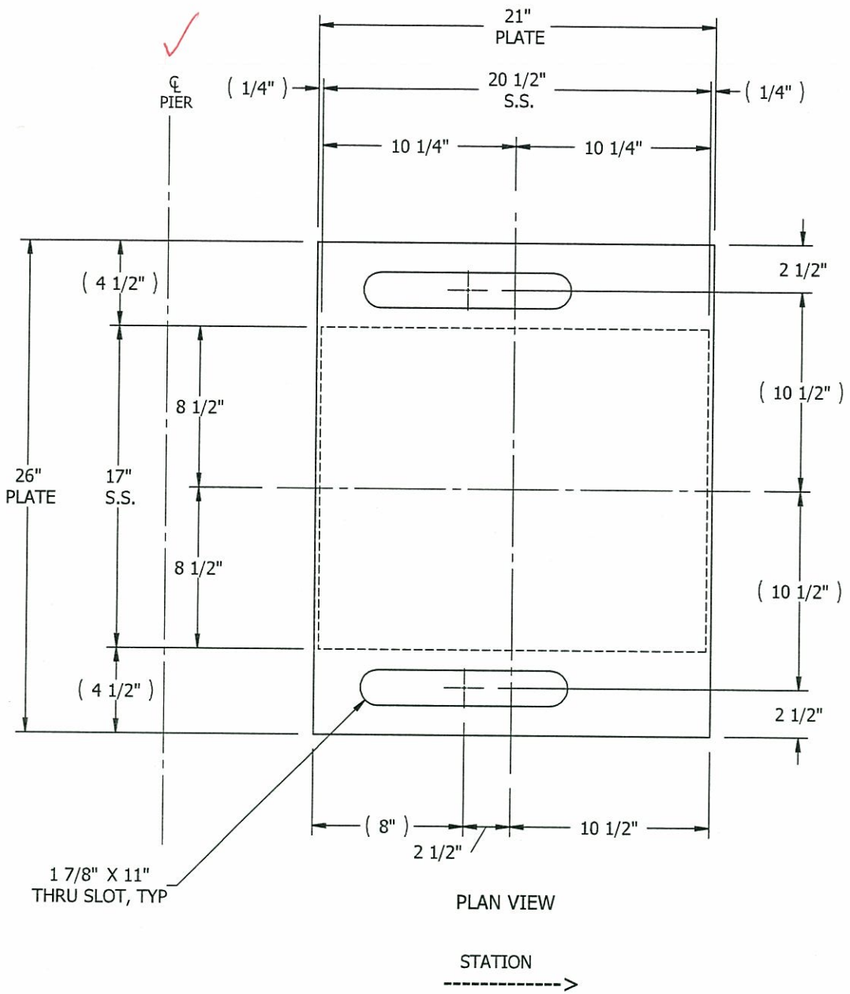

PLAN VIEW

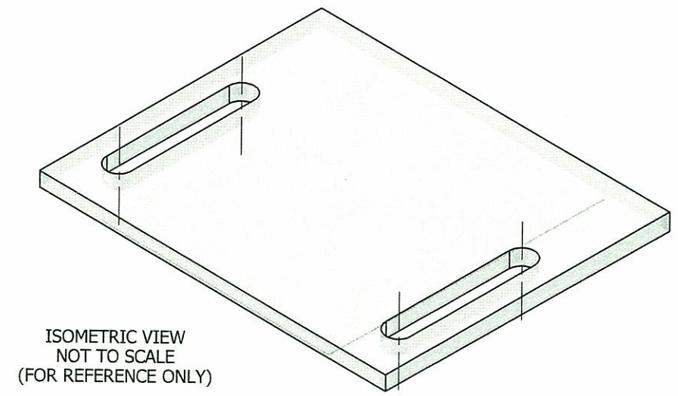

ISOMETRIC VIEW
NOT TO SCALE
(FOR REFERENCE ONLY)

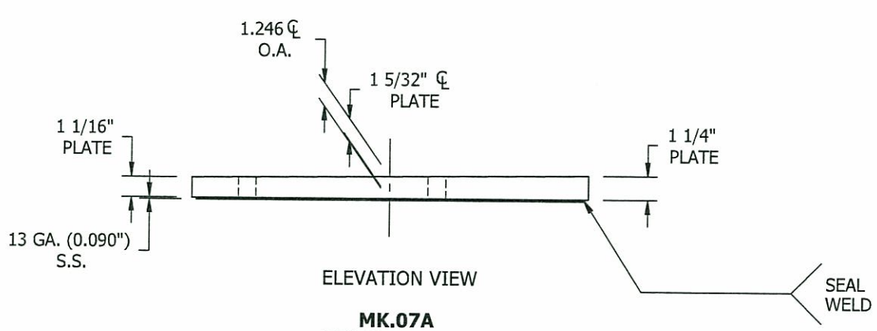

ELEVATION VIEW

MK.07A
BEARING PADS
(25) REQ'D
(15) @ 46S
(10) @ 46N

Stantec
NO EXCEPTION TAKEN
REVISE AS NOTED
RESUBMISSION NOT REQUIRED
REVISE AS NOTED
RESUBMISSION REQUIRED
REJECTED
OTHERWISE
DATE 11/3/14
SIGNATURE
REVIEW BY STANTEC IS FOR THE SOLE PURPOSE OF ASCERTAINING GENERAL CONFORMITY WITH DESIGN. CONTRACTOR IS RESPONSIBLE FOR DIMENSIONS, FABRICATION AND CONSTRUCTION METHODS, COORDINATION OF SUB-TRADES, DETAIL DESIGN OF COMPONENTS, AND ERRORS OR OMISSIONS ON SHOP DRAWINGS.

APPROVED
By Douglas Bonneau at 8:10 am, Nov 05, 2014

SEE LAST SHEET FOR HARDWARE

Seismic Energy Products, Inc.
STRUCTURAL BEARINGS FOR BRIDGES & BUILDINGS
ATHENS, TX PHONE: 903-675-8571

BEARING ASSY FOR:
STATE OF VERMONT AGENCY OF TRANSPORTATION

INTERSTATE 89 OVER STOWE ST & THATCHER BROOK

BRIDGES 46A, 46N & 46S	CONTRACTOR: BECK & BELLUCCI INC		
PROJECT NO. IM 089-2(43)	DRAWN ALUTTRELL	DATE 8/25/14	PO # SIGNED QT
TOWN WATERBURY	CHECKED .	DATE .	SO NO. & ST. **60383 VT**
COUNTY WASHINGTON	REVIEWED MSPELLMAN	DATE 9/10/14	SHEET 6 OF 8

REVISIONS			
REV.	DESCRIPTION	BY	DATE
A	SUBMITTAL	AL	9/17/2014
B	RE-SUBMITTAL - CHANGES PER MARK-UPS DATED 9/26/14	AL	10/28/2014

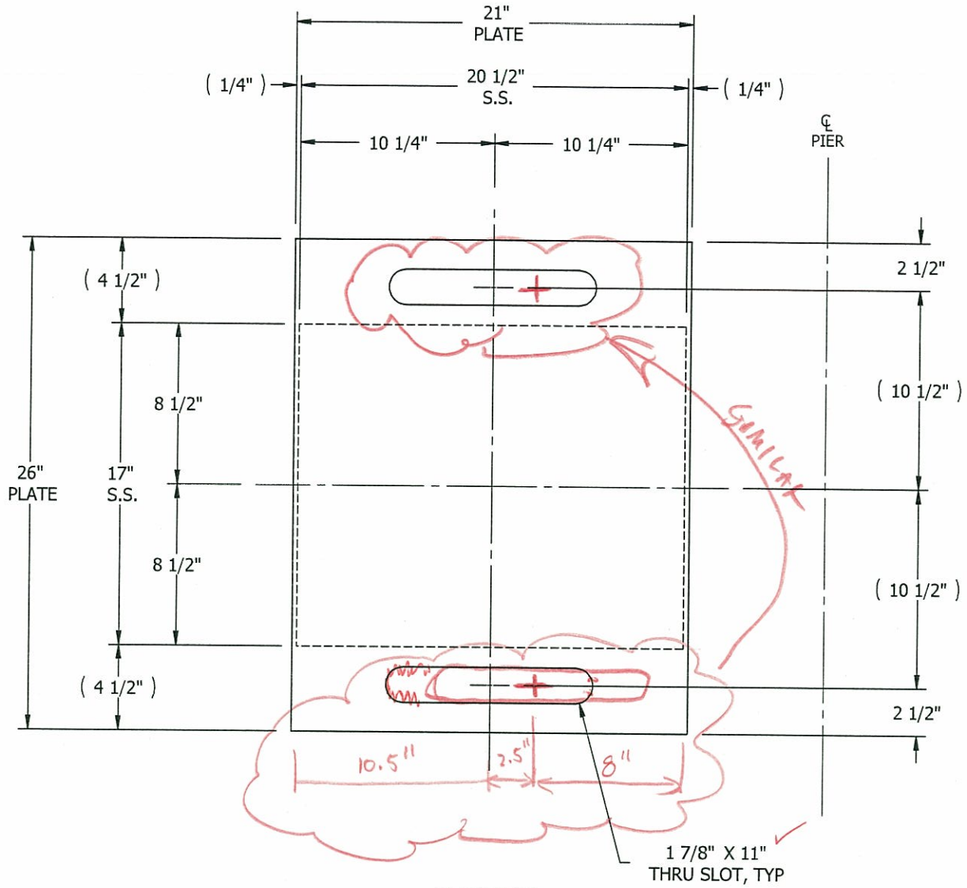

PLAN VIEW

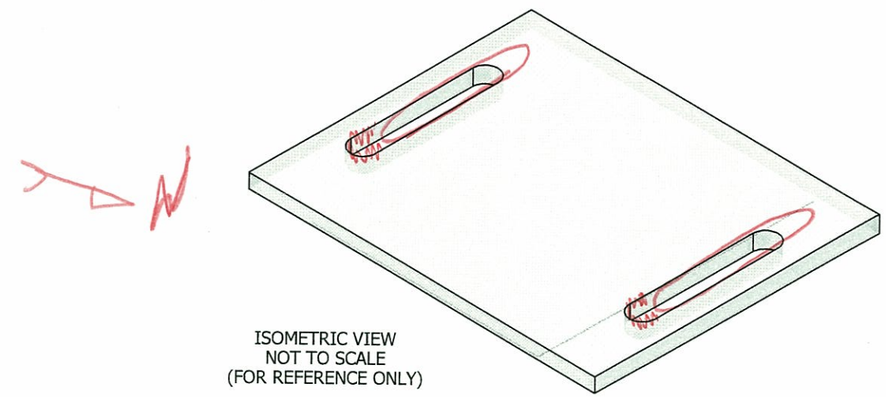

ISOMETRIC VIEW
NOT TO SCALE
(FOR REFERENCE ONLY)

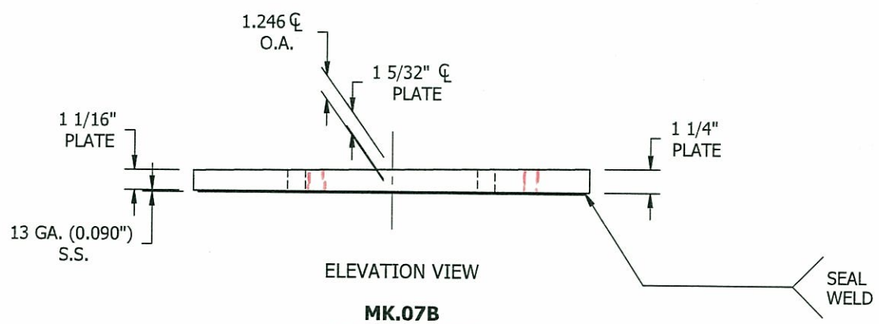

ELEVATION VIEW

MK.07B
BEARING PADS
(25) REQ'D
(15) @ 46S
(10) @ 46N

REVISE AS NOTED
SUBMISSION NOT REQUIRED
REVISE AS NOTED
RESUBMISSION REQUIRED
REJECTED
Stantec
DATE 11/3/14
SIGNATURE
REVIEW BY STANTEC IS FOR THE SOLE PURPOSE OF ASCERTAINING GENERAL CONFORMITY WITH DESIGN. CONTRACTOR IS RESPONSIBLE FOR DIMENSIONS, FABRICATION AND CONSTRUCTION METHODS, COORDINATION OF SUB-TRADES, DETAIL DESIGN OF COMPONENTS, AND ERRORS OR OMISSIONS ON SHOP DRAWINGS.

Vermont Agency of Transportation
RECEIVED
Waterbury\M089-2(43)_BRGFabDWG_AsNoted.pdf

CK'D BY Stantec **OK'D BY** D. Bonneau

November 4, 2014

RESUBMIT No **Approved AsNoted**
BY D. Bonneau **DATE** 11/05/2014

SEE LAST SHEET FOR HARDWARE

Seismic Energy Products, Inc.
STRUCTURAL BEARINGS FOR BRIDGES & BUILDINGS
ATHENS, TX PHONE: 903-675-8571

BEARING ASSY FOR:
STATE OF VERMONT AGENCY OF TRANSPORTATION

INTERSTATE 89 OVER STOWE ST & THATCHER BROOK

BRIDGES 46A, 46N & 46S	CONTRACTOR: BECK & BELLUCCI INC		
PROJECT NO. IM 089-2(43)	DRAWN ALUTTRELL	DATE 8/25/14	PO # SIGNED QT
TOWN WATERBURY	CHECKED .	DATE .	SO NO. & ST. **60383 VT**
COUNTY WASHINGTON	REVIEWED MSPELLMAN	DATE 9/10/14	SHEET 7 OF 8

REVISIONS			
REV.	DESCRIPTION	BY	DATE
A	SUBMITTAL	AL	9/17/2014
B	RE-SUBMITTAL - CHANGES PER MARK-UPS DATED 9/26/14	AL	10/28/2014

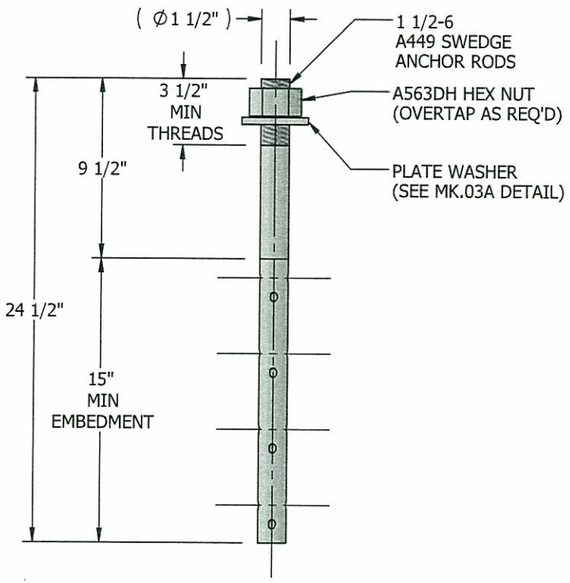

ELEVATION VIEW

MK.03A
SWEDGE ANCHOR RODS
46A ABUTS
(2 EACH ASSY)
(20) TOTAL REQ'D

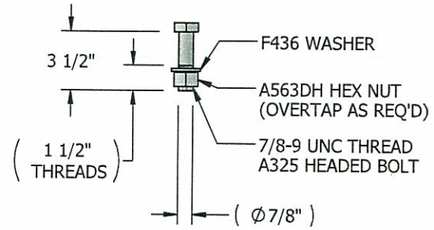

ELEVATION VIEW

MK.03B
SWEDGE ANCHOR RODS
46A ABUTS
(4 EACH ASSY)
(40) TOTAL REQ'D

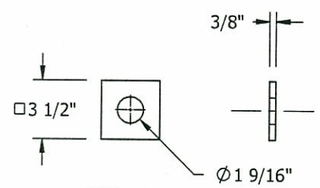

MK.03A
PLATE WASHER
46A ABUTS
(20) REQ'D

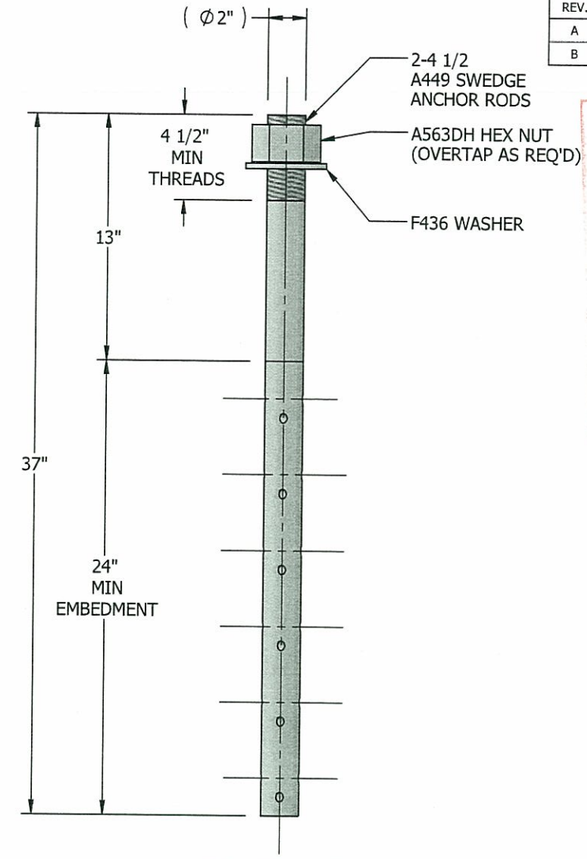

ELEVATION VIEW

MK.05
SWEDGE ANCHOR RODS
46A PIERS
(4 EACH ASSY)
(40) TOTAL REQ'D

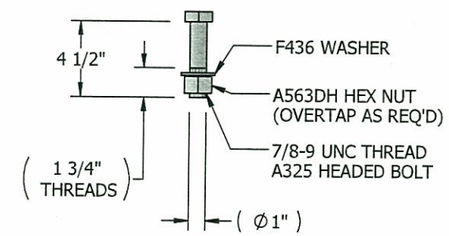

ELEVATION VIEW

MK.05
SWEDGE ANCHOR RODS
46A PIERS
(4 EACH ASSY)
(40) TOTAL REQ'D

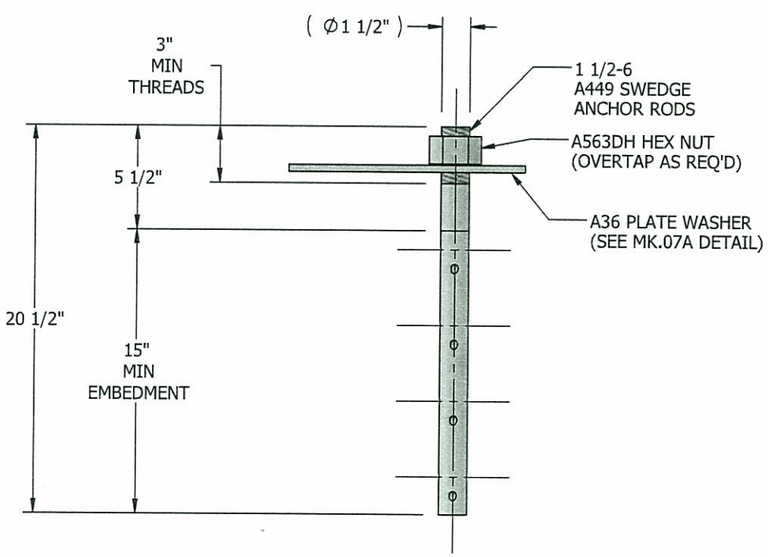

ELEVATION VIEW

MK.07
SWEDGE ANCHOR RODS
46S & 46N
(2 EACH ASSY)
(100) TOTAL REQ'D

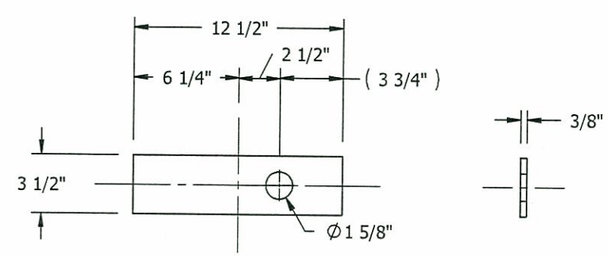

MK.07A
PLATE WASHER
(2 EACH ASSY)
(100) REQ'D

APPROVED
By Douglas Bonneau at 8:11 am, Nov 05, 2014

Stantec
11/3/14
DATE
SIGNATURE
REVIEW BY STANTEC IS FOR THE SOLE PURPOSE OF ASCERTAINING GENERAL CONFORMITY WITH DESIGN. CONTRACTOR IS RESPONSIBLE FOR DIMENSIONS, FABRICATION AND CONSTRUCTION METHODS, COORDINATION OF SUB-TRADES, DETAIL DESIGN OF COMPONENTS, AND ERRORS OR OMISSIONS ON SHOP DRAWINGS.

TOLERANCES:
ANCHOR ROD LENGTH.....-0, +1/4"

GALVANIZE: PER ASTM A123 OR A153 AS APPLICABLE.

Seismic Energy Products, Inc.
STRUCTURAL BEARINGS FOR BRIDGES & BUILDINGS
ATHENS, TX PHONE: 903-675-8571

BEARING ASSY FOR:
STATE OF VERMONT AGENCY OF TRANSPORTATION

INTERSTATE 89 OVER STOWE ST & THATCHER BROOK

BRIDGES 46A, 46N & 46S	CONTRACTOR: BECK & BELLUCCI INC		
PROJECT NO. IM 089-2(43)	DRAWN ALUTTRELL	DATE 8/25/14	PO # SIGNED QT
TOWN WATERBURY	CHECKED .	DATE .	SO NO. & ST. **60383 VT**
COUNTY WASHINGTON	REVIEWED MSPELLMAN	DATE 9/10/14	SHEET 8 OF 8