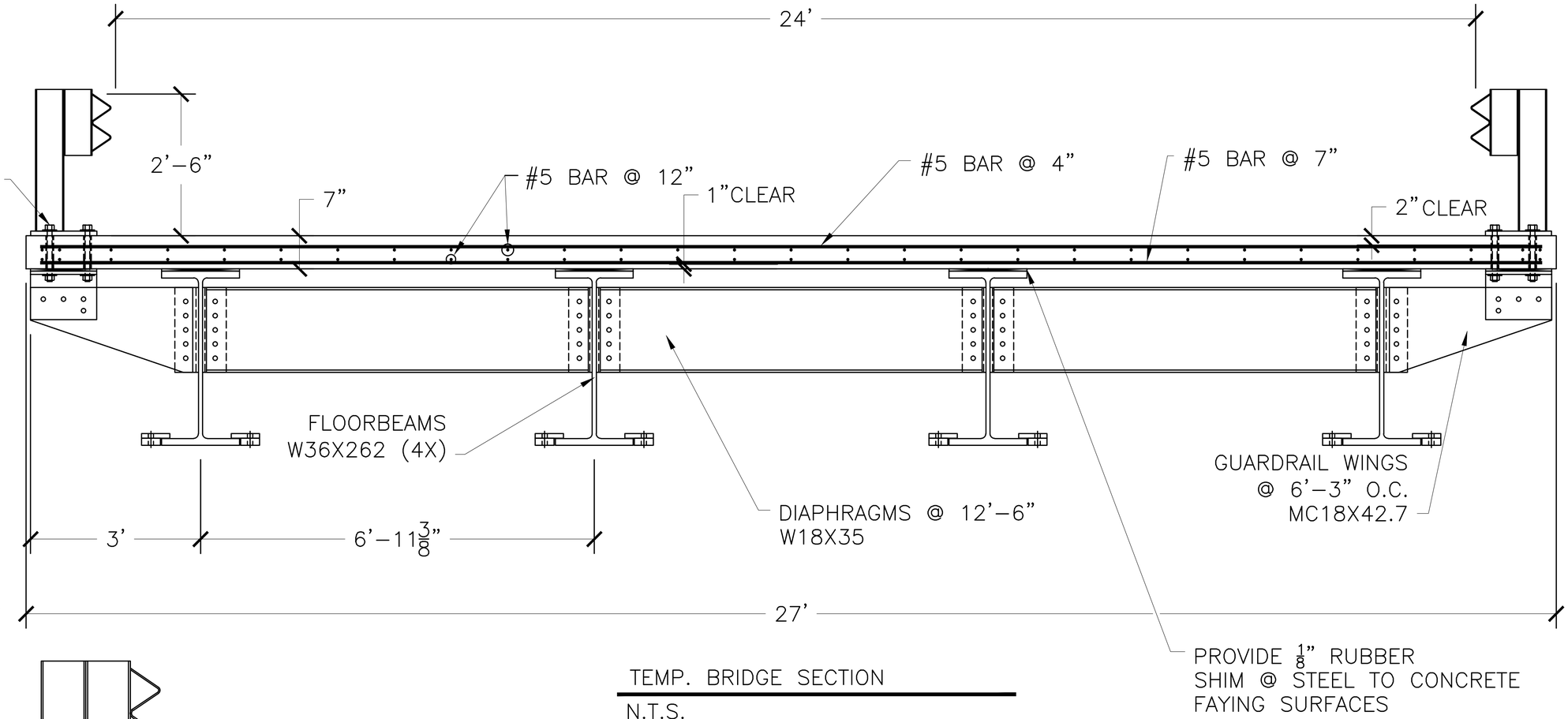

TEMP. BRIDGE SECTION

N.T.S.

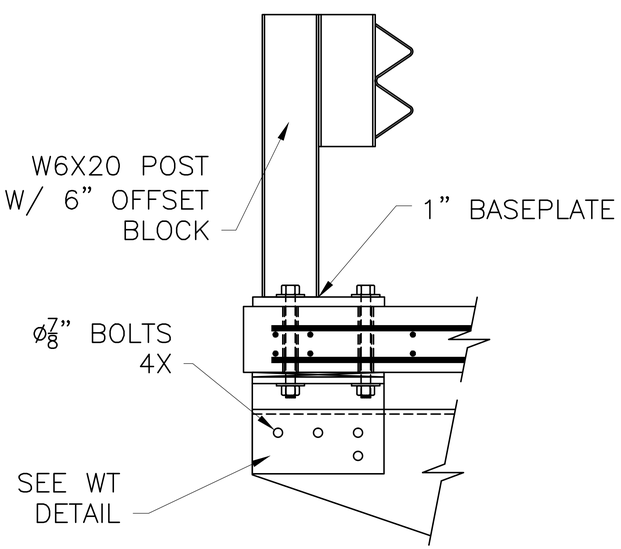

GUARDRAIL/SLAB CONN. DETAIL

N.T.S

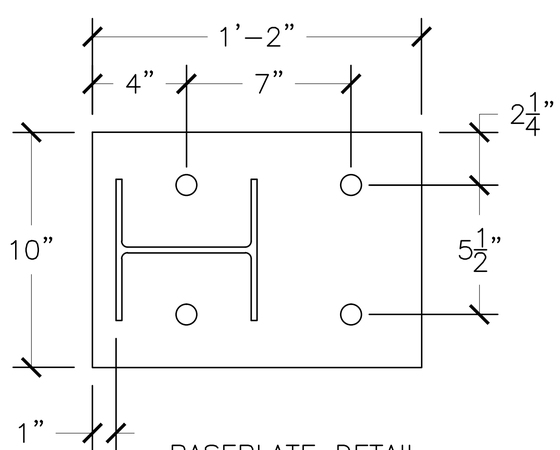

BASEPLATE DETAIL

N.T.S.

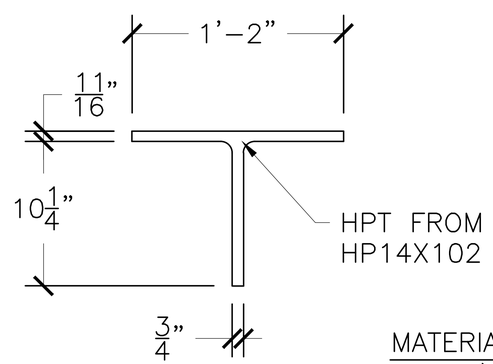

WT DETAIL

N.T.S.

MATERIAL NOTES:

1) REBAR TO BE GR. 60 MIN.
2) CONCRETE TO BE 5,000 PSI MIN.

STATE OF VERMONT RONALD K. BIEL No. 6994 REGISTERED PROFESSIONAL ENGINEER

Vermont Agency of Transportation
RECEIVED
Vermont VAT 32-1-125 - Temporary Bridge Plans Provided 32-1-1-pdf
CK'D BY D. PETERSON OK'D BY C. CARLSON
November 6, 2015
RESUBMIT NO Approved
BY C. CARLSON DATE 11/6/2015

REV. NO.	DATE:

RENAUD BROS. INC.
283 Ft. BRIDGEMAN RD. VERNON VT., 05354
PH. (802) 257-7583 FAX: (802) 257-7308

SHEET NAME: TEMPORARY BRIDGE SECTION
PROJECT NAME: WARDSBORO
PROJECT NO: BRF 013-1 (15)
DRAWN BY: CE
CHK'D BY:
DATE: 09/28/2015
SHEET NO. 1 OF 8

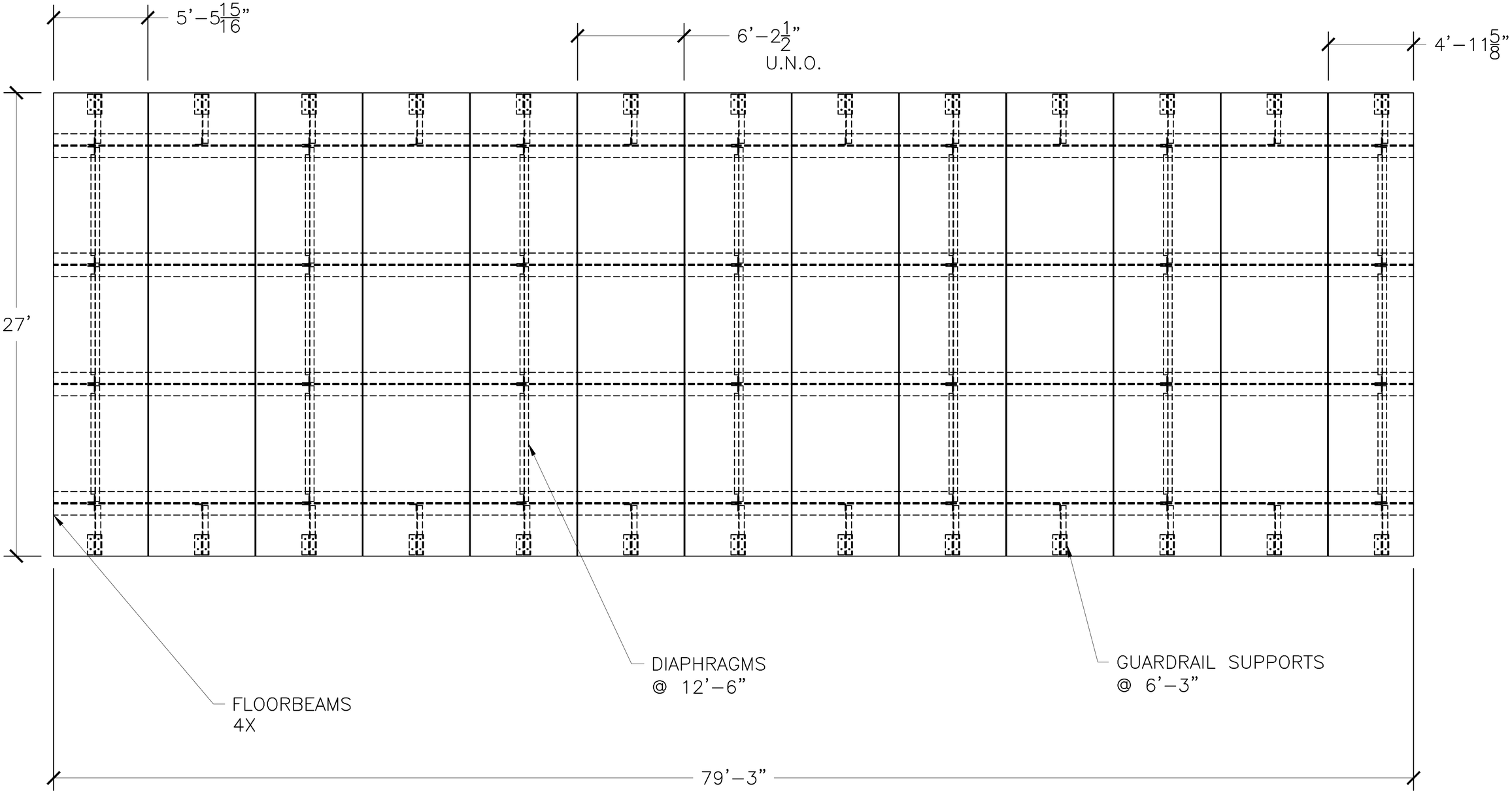

BRIDGE FRAMING PLAN
NOT TO SCALE

Vermont Agency of Transportation
RECEIVED
CK'D BY D. PETERSON OK'D BY C. CARLSON
November 6, 2015
RESUBMIT NO Approved
BY C. CARLSON DATE 11/6/2015

REV. NO.	DATE:

RENAUD BROS. INC.
283 FT. BRIDGEMAN RD. VERNON VT., 05354
PH. (802) 257-7383 FAX: (802) 257-7308

SHEET NAME:	TEMPORARY BRIDGE PLAN
PROJECT NAME:	WARDSBORO
PROJECT NO:	BRF 013-1 (15)
DRAWN BY:	CE
CHK'D BY:	
DATE:	09/28/2015
SHEET NO.	2 OF 8

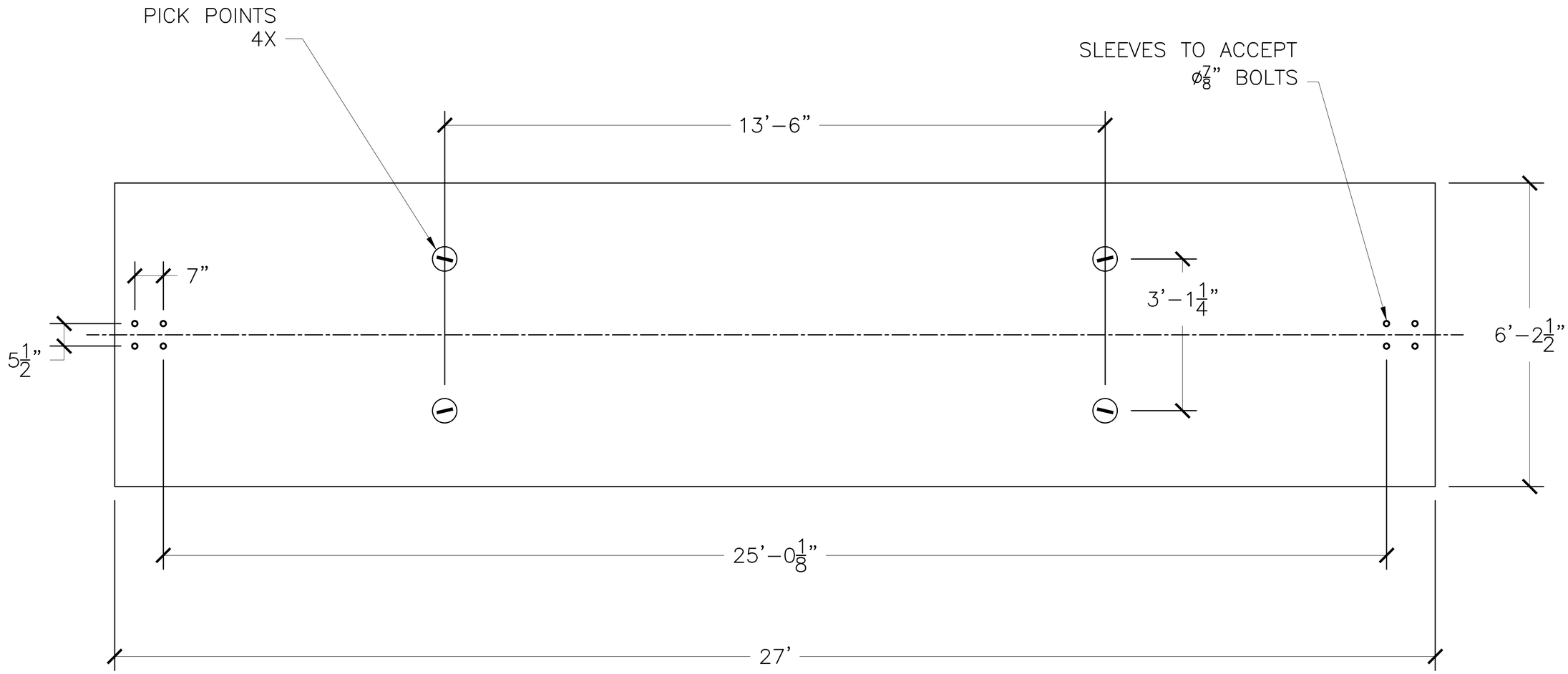

SLAB PLAN-VIEW
NOT TO SCALE

Vermont Agency of Transportation
RECEIVED
CK'D BY D. PETERSON OK'D BY C. CARLSON
November 6, 2015
RESUBMIT NO Approved
BY C. CARLSON DATE 11/6/2015

NOTE:
POCKETS TO BE FILLED WITH LOW STRENGTH GROUT OR FLOWABLE FILL AFTER INSTALLATION.

STATE OF VERMONT
RONALD K. BELL
No. 6994
REGISTERED PROFESSIONAL ENGINEER

REV. NO.	DATE:

RENAUD BROS. INC.
283 FT. BRIDGEMAN RD. VERNON VT., 05354
PH. (802) 257-7583 FAX.(802) 257-7308

SHEET NAME: TEMPORARY BRIDGE SLAB PLAN
PROJECT NAME: WARDSBORO
PROJECT NO: BRF 013-1 (15)
DRAWN BY: CE
CHK'D BY:
DATE: 09/28/2015
SHEET NO. 3 OF 8

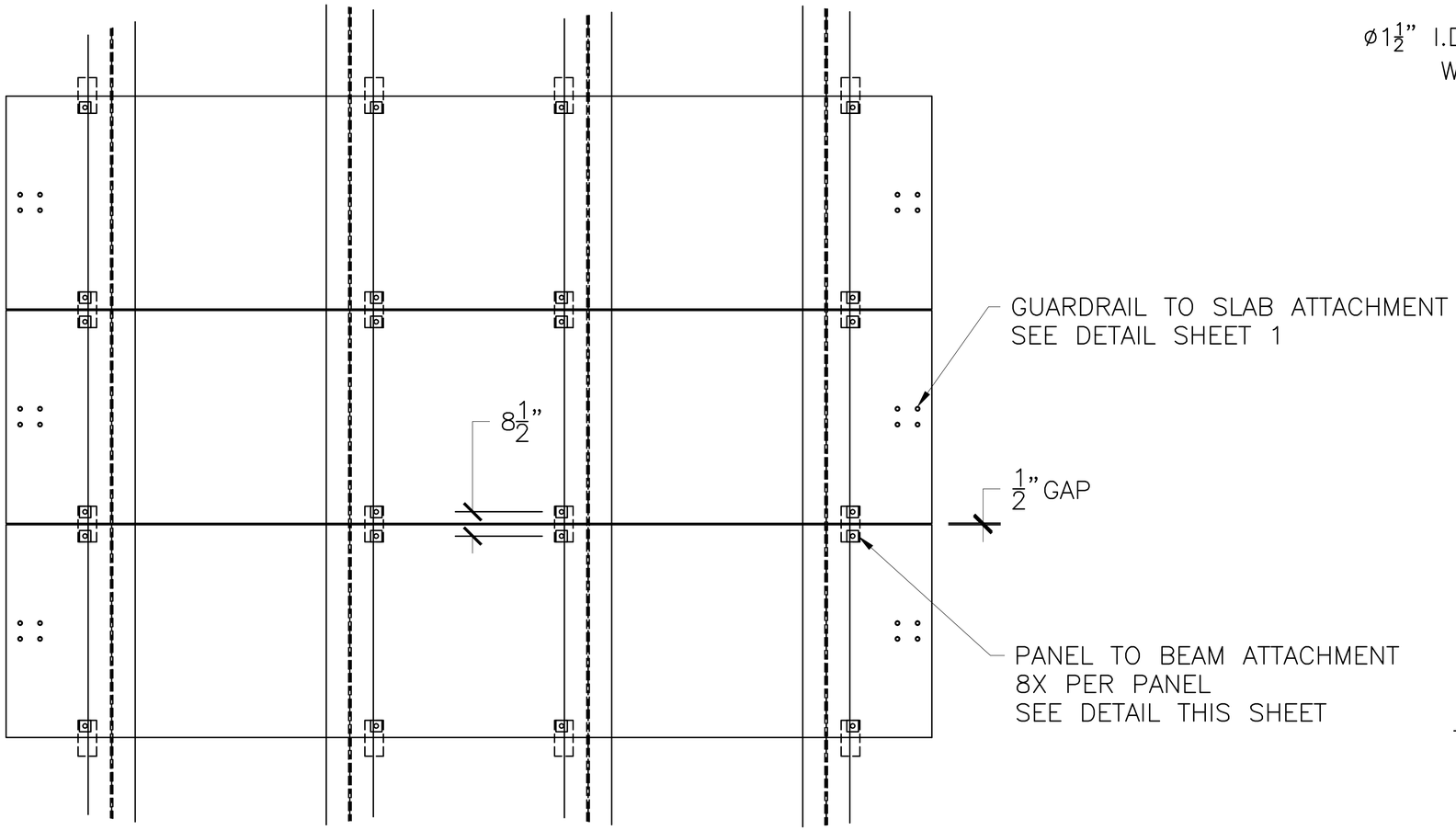

PANEL ATTACHMENT PLAN

ATTACHMENT IS DESIGNED TO ATTACH PANELS TO BEAMS, & PANELS TO EACH OTHER.

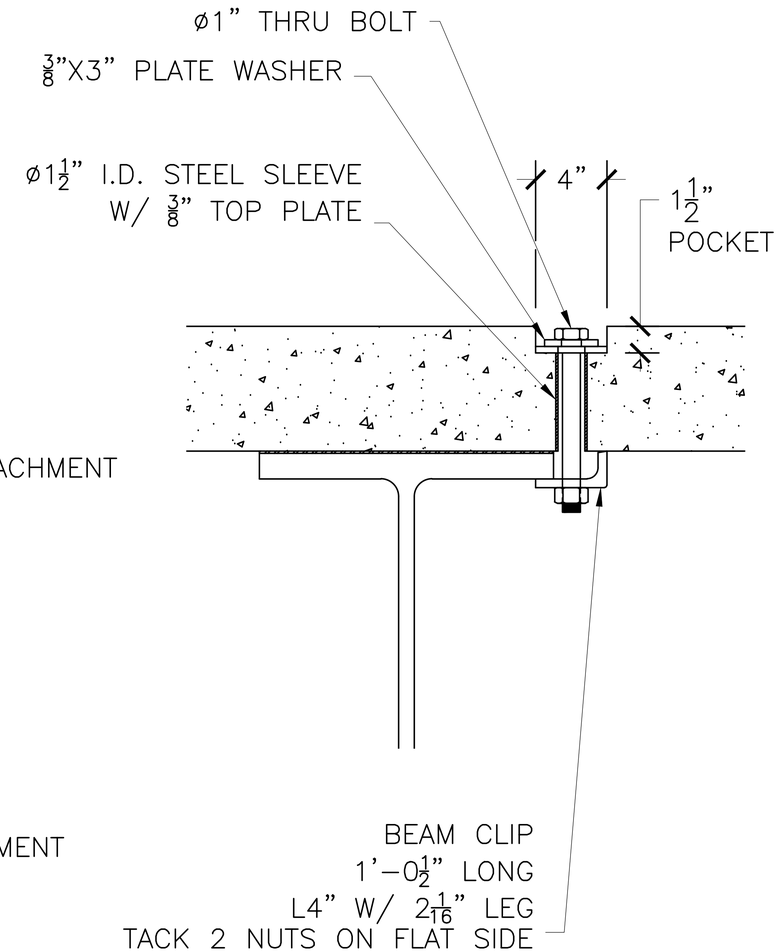

ATTACHMENT SECTION DETAIL

NOTE:

POCKETS TO BE FILLED WITH LOW STRENGTH GROUT OR FLOWABLE FILL AFTER INSTALLATION.

STATE OF VERMONT
RONALD K. BELL
No. 6994
REGISTERED
PROFESSIONAL ENGINEER

Vermont Agency of Transportation
RECEIVED
Wardsboro BRF 013-1 (15) - Temporary Bridge Plans Resubmit 3(2).pdf
CK'D BY D. PETERSON OK'D BY C. CARLSON
November 6, 2015
RESUBMIT NO Approved
BY C. CARLSON DATE 11/6/2015

REV. NO.	DATE:

BRENAUD BROS. INC.
285 FT. BRIDGEMAN RD. VERNON VT., 05354
PH. (802) 257-7583 FAX: (802) 257-7308

SHEET NAME: SLAB ATTACHMENT DETAILS
PROJECT NAME: WARDSBORO
PROJECT NO: BRF 013-1 (15)
DRAWN BY: CE
CHK'D BY:
DATE: 09/28/2015
SHEET NO. 4 OF 8

MATERIALS FOR FOOTING AND STEM WALL:

CONCRETE FOR FOOTING AND STEM WALL
TO BE HP CLASS B WITH 3,500 PSI 28-DAY COMPRSSIVE STRENGTH

REINFORCING STEEL TO HAVE Fb= 60 KSI

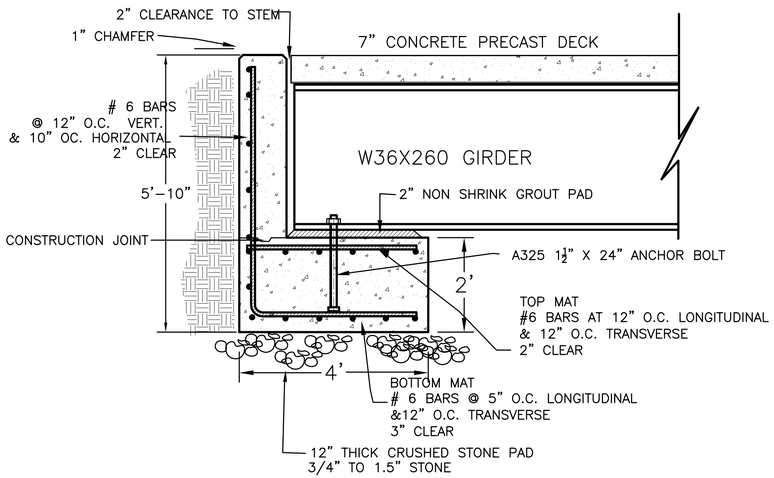

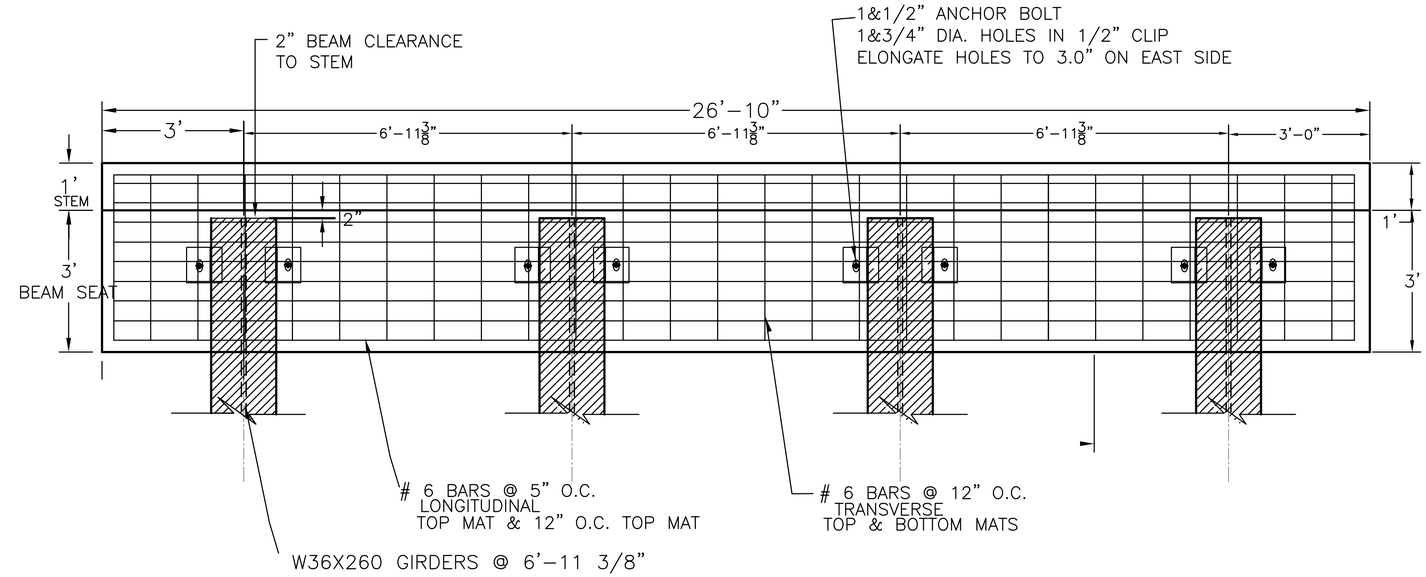

Vermont Agency of Transportation
RECEIVED
Wardsboro BRF 013-1 (15) - Temporary Bridge Plans Resubmit 3(3).pdf
CK'D BY D. PETERSON OK'D BY C. CARLSON
November 6, 2015
RESUBMIT NO Approved
BY C. CARLSON DATE 11/6/2015

REV. NO.	DATE:

RENAUD BROS. INC.
283 FT. BRIDGEMAN RD. VERNON VT., 05354
PH. (802) 257-7583 FAX.(802) 257-7308

SHEET NAME: BRIDGE ABUTMENT DETAILS
PROJECT NAME: WARDSBORO
PROJECT NO: BRF 013-1 (15)
DRAWN BY: CE
CHK'D BY:
DATE: 09/28/2015
SHEET NO. 5 OF 8

DETOUR PC STA 30+00.00 =
ML STA. 120+38.68

TEMPORARY ABUTMENT #1
STA. 31+45.65

TEMPORARY ABUTMENT #2
STA. 32+27.06

EXISTING CULVERT OUTLET 1408.91

PC
STA 32+08.85

PI
STA 32+87.25 BK
STA 32+70.99 AH

PT
STA 33+49.40

CURVE (2)
DELTA = 63°15'01"
D = 45°00'00"
R = 127.32'
T = 78.41'
L = 140.56'
E = 22.21'

DETOUR PT STA 33+92.81 =
ML STA. 124+30.78

PLAN LOCATION OF DRYWELL COVER WITH
FABRIC PRIOR TO PLACING WASTE BLOCKS AND FILL

ACTUAL LOCATION OF THE DRYWELL

PT
STA 31+28.67

CURVE (2)

33+00

N 22^40'18" E

33+93

TYPE III BARRIERS IN PLACE WHEN NOT ACTIVE CONSTRUCTION

JERSEY BARRIERS IN PLACE WHEN NOT ACTIVE CONSTRUCTION

FLARED APPROACH GUARD RAIL
TYPICAL ALL FOUR CORNERS
G - 1D WITH NO ANCHORS

N 40^34'43" W

32+00

℄ TEMPORARY
DETOUR

CURVE (1)

30+00

N 17^19'16" E

31+00

JERSEY BARRIERS IN PLACE WHEN NOT ACTIVE CONSTRUCTION

SMEAD RD STOP SIGN RELOCATED

TYPE III BARRIERS IN PLACE WHEN NOT ACTIVE CONSTRUCTION

SMEAD RD STOP BAR

CURVE (1)
DELTA = 57°53'59"
D = 45°00'00"
R = 127.32'
T = 70.43'
L = 128.67'
E = 18.18'

HATCH DESIGNATES LINE
STRIP TO BE REMOVED (TYP)

CONCRETE WASTE BLOCKS TO
HOLD APPROACH FILLS

PI
STA. 30+70.43 BK
STA. 30+58.24 AH

1440 1430 1420 1410 1400 1450

Vermont Agency of Transportation
RECEIVED
Wardsboro BRF 013-1 (15) - Temporary Bridge Plans Resubmit 3(2).pdf

CK'D BY D. PETERSON OK'D BY C. CARLSON

November 6, 2015

RESUBMIT NO Approved

BY C. CARLSON DATE 11/6/2015

TEMPORARY DETOUR PLAN

SCALE: 1" = 20' - 0"

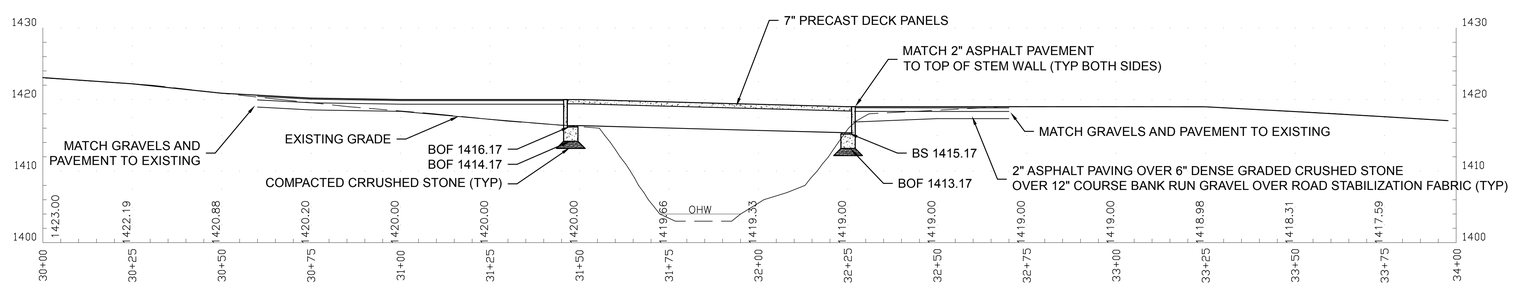

TEMPORARY DETOUR PROFILE

HORIZONTAL SCALE: 1" = 20' - 0"
VERTICAL SCALE: 1" = 10' - 0"

REV. NO.	DATE:
2	11/4/15
1	10/19/15

BRENAUD BROS. INC.
283 FT. BRIDGEMAN RD. VERNON VT., 05354
PH. (802) 257-7583 FAX: (802) 257-7308

SHEET NAME: TEMPORARY BRIDGE PLAN AND PROFILE

PROJECT NAME: WARDSBORO

PROJECT NO: BRF 013-1 (15)

DRAWN BY: CE

CHK'D BY:

DATE: 09/28/2015

SHEET NO. 6 OF 8

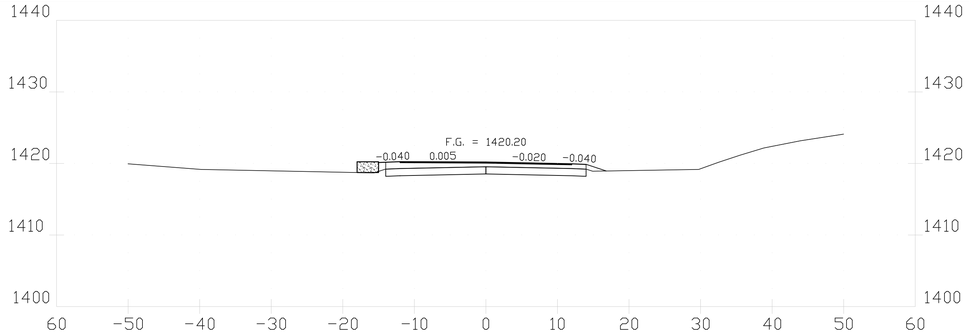

30+75

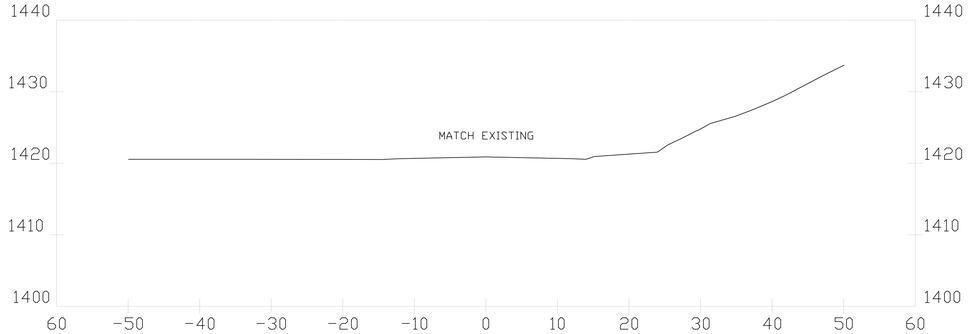

30+50

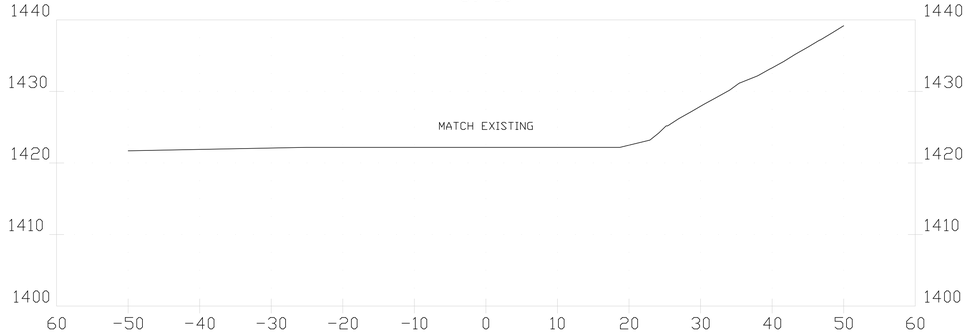

30+25

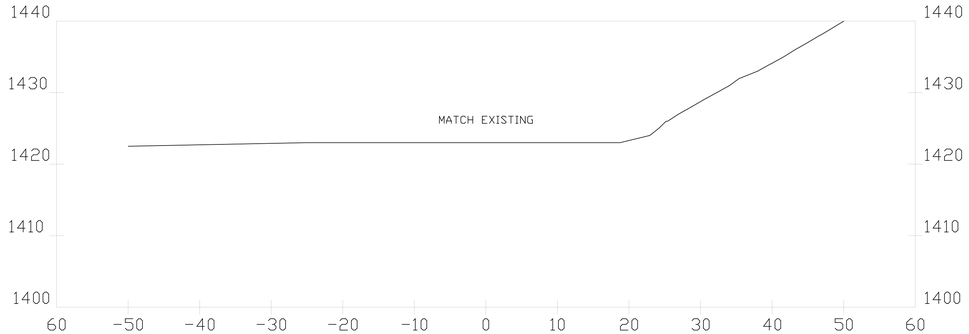

30+00

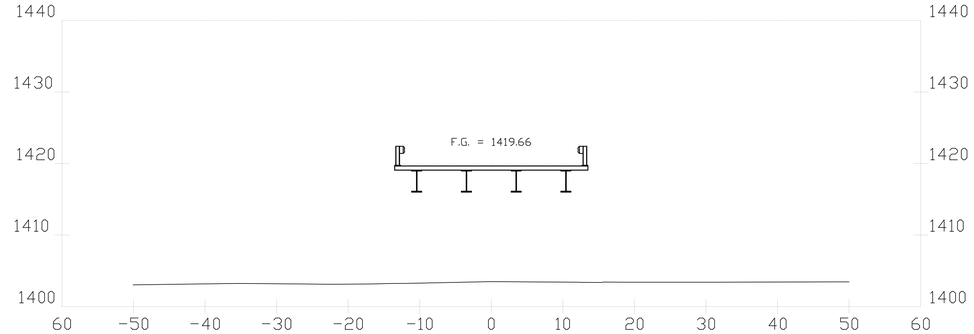

31+75

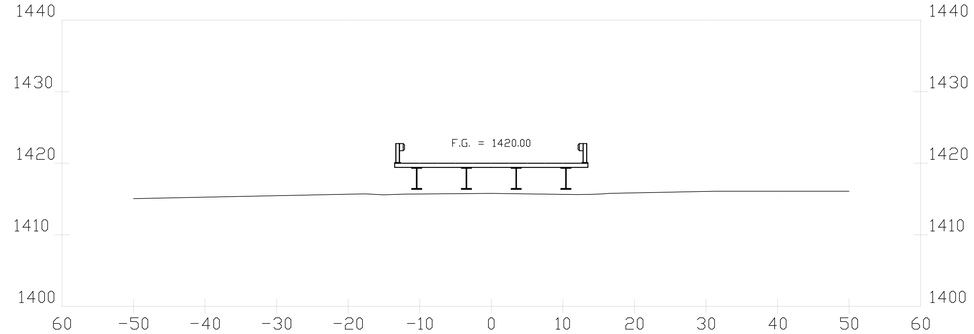

31+50

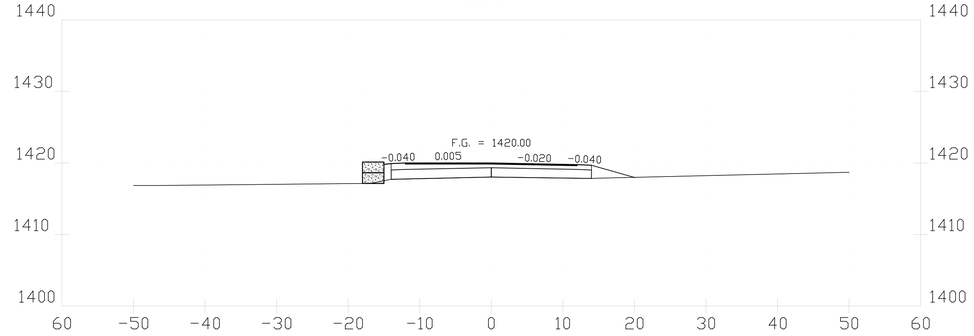

31+25

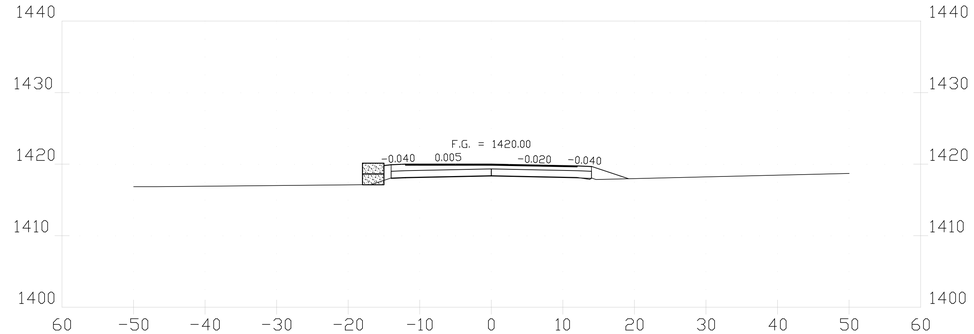

31+00

Vermont Agency of Transportation
RECEIVED
Wardsboro BRF 013-1 (15) - Temporary Bridge Plans Resubmit 3(2).pdf
CK'D BY D. PETERSON OK'D BY C. CARLSON
November 6, 2015
RESUBMIT NO Approved
BY C. CARLSON DATE 11/6/2015

STATE OF VERMONT
RONALD K. BELL
No. 6994
REGISTERED
PROFESSIONAL ENGINEER

TEMPORARY DETOUR CROSS SECTIONS

HORIZONTAL SCALE: 1" = 20' - 0"
VERTICAL SCALE: 1" = 20' - 0"

REV. NO.	DATE:

RENAUD BROS. INC.
283 FT. BRIDGEMAN RD. VERNON VT., 05354
PH. (802) 257-7583 FAX: (802) 257-7308

SHEET NAME: TEMPORARY BRIDGE CROSS SECTIONS
PROJECT NAME: WARDSBORO
PROJECT NO: BRF 013-1 (15)
DRAWN BY: CE
CHK'D BY:
DATE: 09/28/2015
SHEET NO. 7 OF 8

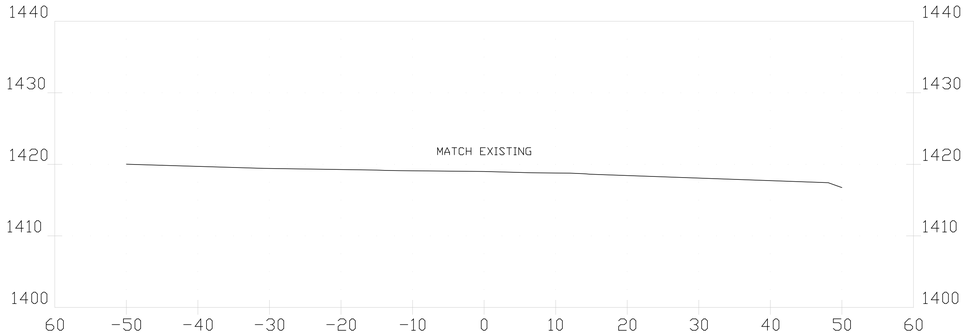

32+75

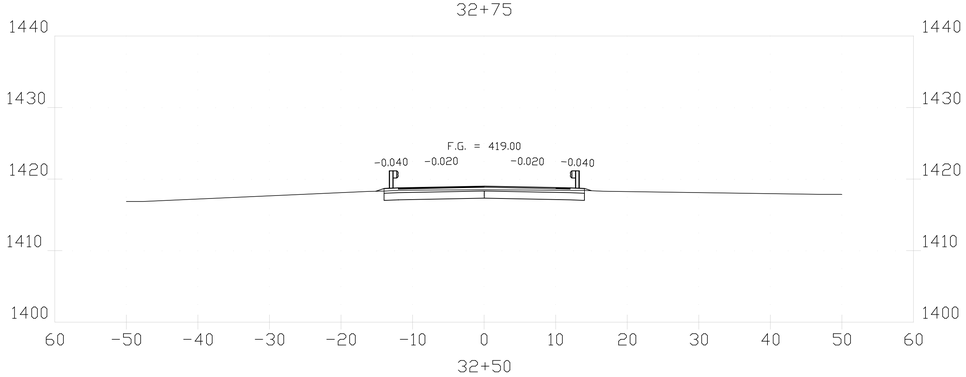

32+50

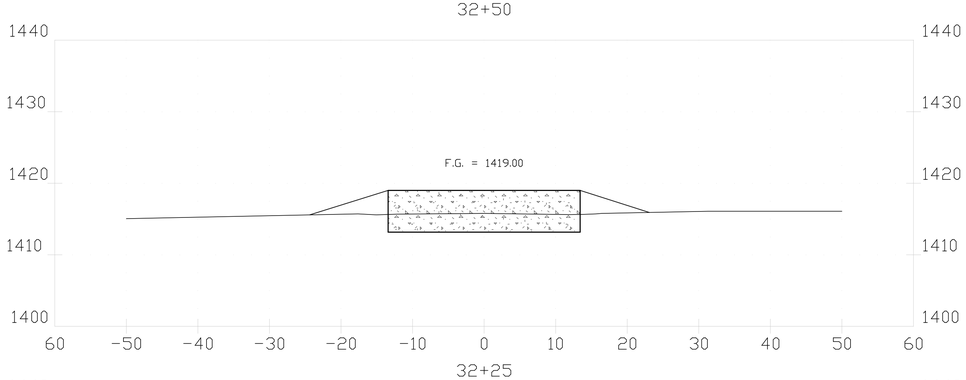

32+25

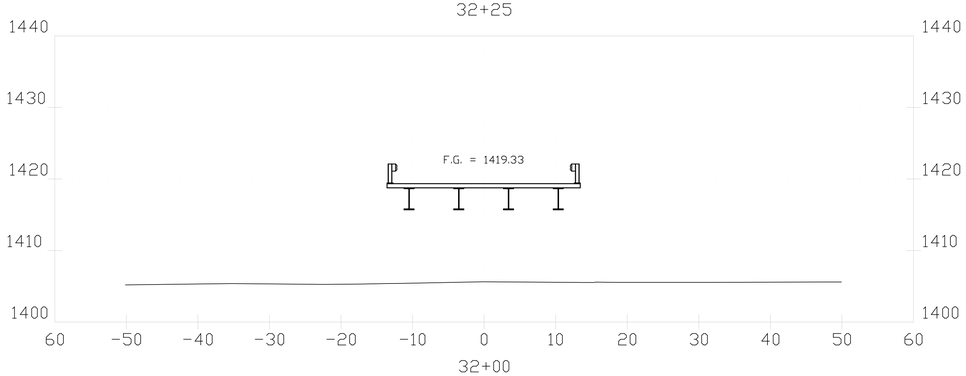

32+00

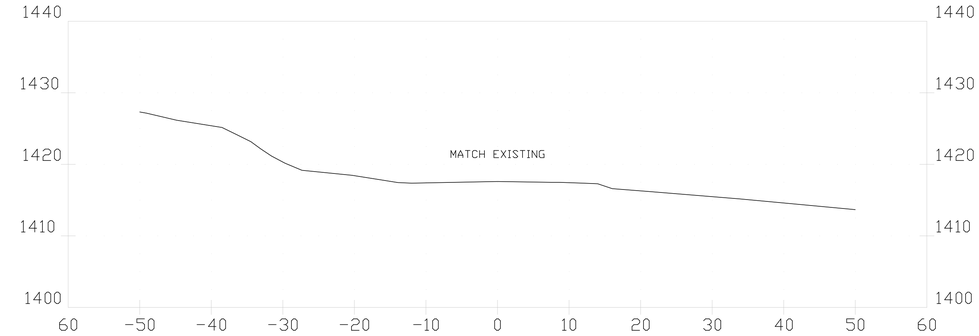

33+75

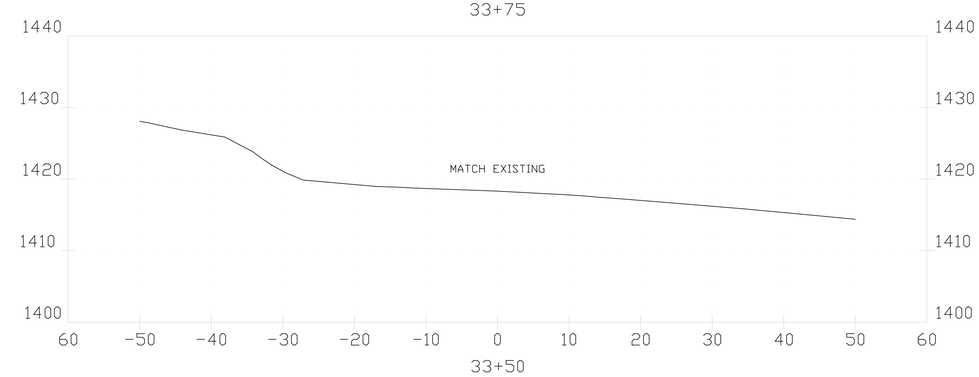

33+50

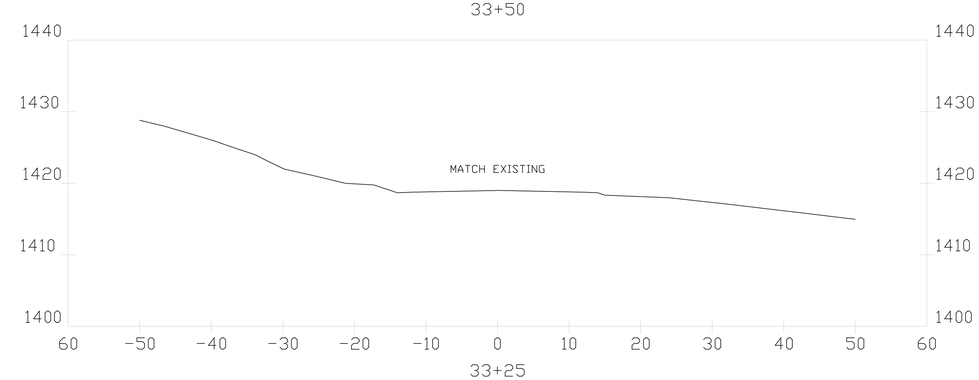

33+25

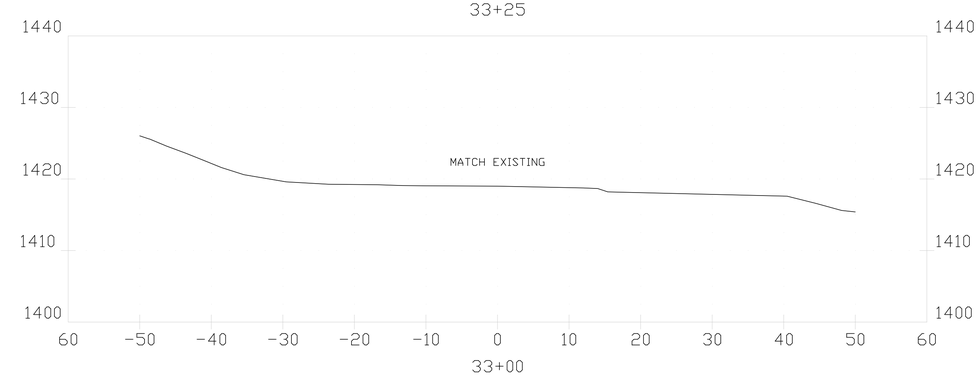

33+00

Vermont Agency of Transportation
RECEIVED
CK'D BY D. PETERSON OK'D BY C. CARLSON
November 6, 2015
RESUBMIT NO Approved
BY C. CARLSON DATE 11/6/2015

TEMPORARY DETOUR CROSS SECTIONS

HORIZONTAL SCALE: 1" = 20' - 0"
VERTICAL SCALE: 1" = 20' - 0"

REV. NO.	DATE:

RENAUD BROS. INC.
283 FT. BRIDGEMAN RD. VERNON VT., 05354
PH. (802) 257-7383 FAX: (802) 257-7308

SHEET NAME: TEMPORARY BRIDGE CROSS SECTIONS
PROJECT NAME: WARDSBORO
PROJECT NO: BRF 013-1 (15)
DRAWN BY: CE
CHK'D BY:
DATE: 09/28/2015
SHEET NO. 8 OF 8