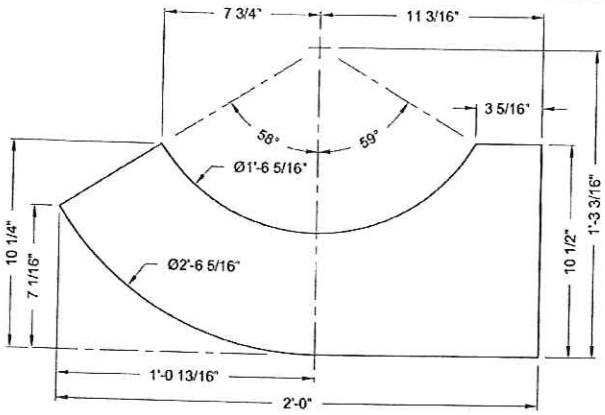

DETAIL ITEM 1

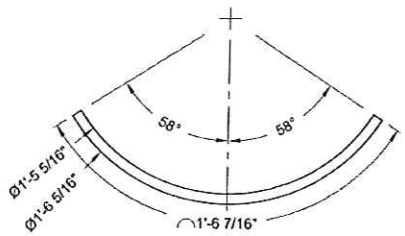

DETAIL ITEM 2

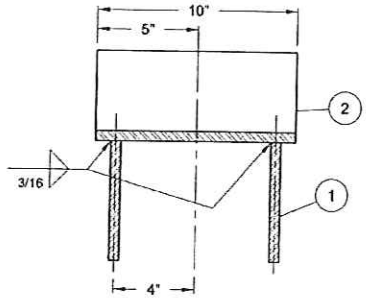

SECTION B-B

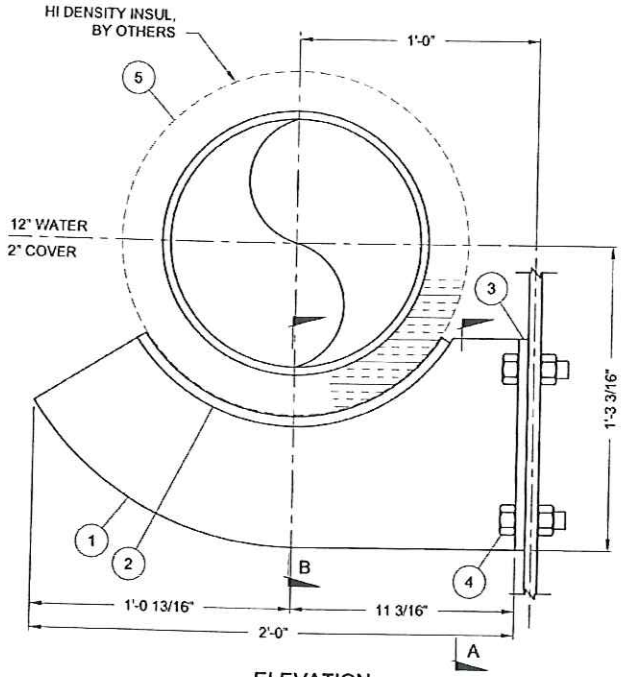

ELEVATION

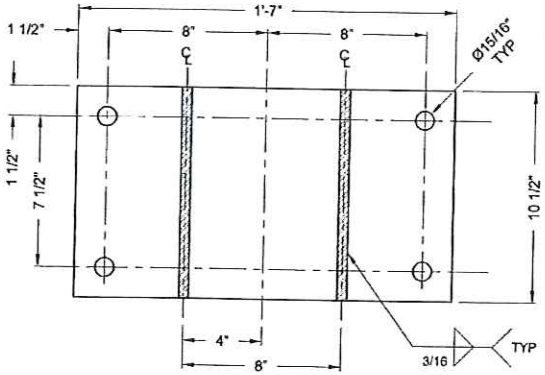

SECTION A-A

ITEM NO.	QTY.	FIG NO.	DESCRIPTION	FIN.	MATL
1	2	---	PL1/2", AS SHOWN	G	A36
2	1	---	PL1/2", ROLLED AS SHOWN, WIDTH=10"	G	A36
3	1	---	PL1/2", AS SHOWN	G	A36
4	4	---	Ø7/8" x 1 1/2" LG. BOLT & HEX NUT, A325 - TYPE 3	--	A325
5	1	170	SIZE 21B, 360° INSUL. SHIELD, SS STRAPS BY OTHERS	G	CS

PIPE SIZE/SYSTEM:	12" WATER	REFERENCE DRAWINGS.
PIPE MATERIAL:	DI	1.
DEADWEIGHT LOAD (LB), Fy:	---	2.

NOTES:

1. WELDING SHALL BE IN ACCORDANCE WITH AWS D1.1

G= GALVANIZED
P= RED OXIDE
B= BLACK

Vermont Agency of Transportation

RECEIVED

CK'D BY D. PETERSON **OK'D BY** C. CARLSON

February 20, 2015

RESUBMIT NO **Approved**

BY C. CARLSON **DATE** 03/04/2015

REV	DATE	DESCRIPTION	BY	CHK	APV
A	2-5-15	FOR APPROVAL	JRK	---	

NEWMAN ASSOCIATES
CANTON, MA

PIPE SUPPORT

STOWE
VAOT STOWE BRF 0235 (11)

QTY: 14

CUSTOMER: FERGUSON WATERWORKS

SUPPORT NO: PS-01 SHT. 1 OF 1

FERGUSON
a WOLSELEY company
429 Troy Avenue • Colchester, VT 05446
Phone: 802-655-3505 • Fax: 802-655-7943
www.ferguson.com
Nobody expects more from us than we do℠

INSULATION SHIELDS

Fig. 170 INSULATION PROTECTION SHIELD

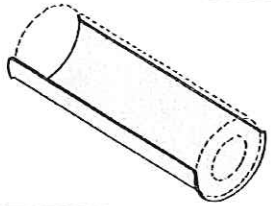

Note: 12" (304.8mm) length shields furnished with flared ends.

FUNCTION: Designed for use in the suspension of insulated pipe lines to protect the insulation from being crushed by the hanger.

APPROVALS: Complies with Federal Specifications A-A-1192A (Type 40) and Manufacturers' Standardization Society ANSI/SP-69 and SP-58 (Type 40).

MATERIAL: Low Carbon Steel

FINISH: Pre-galvanized

ORDERING: Specify shield number and figure number.

Available in stainless steel. To order, specify 304 or 316 and add suffix SS to figure number.
Price on request.

Size No.	Shield I.D.		Shield Gauge	Shield Length		Hanger Size		Wt. Each	
								Lbs.	kg
1A	2 3/8	(60.33)	18	12	(304.80)	2	(50)	.55	(.25)
2A	2 5/8	(66.68)	18	12	(304.80)	2 1/2	(65)	.64	(.29)
3A	2 7/8	(73.03)	18	12	(304.80)	2 1/2	(65)	.66	(.30)
4A	3 1/2	(88.90)	18	12	(304.80)	3	(80)	.89	(.40)
5A	4	(101.60)	18	12	(304.80)	3 1/2	(90)	.91	(.41)
6A	4 1/2	(114.30)	18	12	(304.80)	4	(100)	1.12	(.51)
7A	5	(127.00)	18	12	(304.80)	5	(125)	1.15	(.52)
8A	5 5/8	(142.88)	18	12	(304.80)	5	(125)	1.35	(.61)
8B	5 5/8	(142.88)	16	12	(304.80)	5	(125)	2.00	(.91)
9A	6	(152.40)	18	12	(304.80)	6	(150)	1.45	(.66)
9B	6	(152.40)	16	12	(304.80)	6	(150)	2.10	(.95)
10A	6 7/8	(168.28)	18	12	(304.80)	6	(150)	1.50	(.68)
10B	6 7/8	(168.28)	16	12	(304.80)	6	(150)	2.37	(1.08)
11A	7 5/8	(193.68)	18	12	(304.80)	8	(200)	2.02	(.92)
11B	7 5/8	(193.68)	16	12	(304.80)	8	(200)	2.50	(1.13)
11C	7 5/8	(193.68)	16	18	(457.20)	8	(200)	3.75	(1.70)
12A	8 5/8	(219.08)	18	12	(304.80)	8	(200)	2.28	(1.03)
12B	8 5/8	(219.08)	16	12	(304.80)	8	(200)	2.83	(1.28)
12C	8 5/8	(219.08)	16	18	(457.20)	8	(200)	4.25	(1.93)
13A	9 5/8	(244.48)	18	12	(304.80)	10	(250)	2.54	(1.15)
13B	9 5/8	(244.48)	16	12	(304.80)	10	(250)	3.15	(1.43)
13C	9 5/8	(244.48)	16	18	(457.20)	10	(250)	4.73	(2.15)
14A	10 3/4	(273.05)	18	12	(304.80)	10	(250)	2.84	(1.29)
14B	10 3/4	(273.05)	16	12	(304.80)	10	(250)	3.53	(1.60)
14C	10 3/4	(273.05)	16	18	(457.20)	10	(250)	5.30	(2.40)
14D	10 3/4	(273.05)	14	24	(609.60)	10	(250)	9.63	(4.37)
15B	11 3/4	(298.45)	16	12	(304.80)	12	(300)	4.00	(1.81)
15C	11 3/4	(298.45)	16	18	(457.20)	12	(300)	6.00	(2.72)
15D	11 3/4	(298.45)	14	24	(609.60)	12	(300)	10.00	(4.54)
16B	12 3/4	(323.85)	16	12	(304.80)	12	(300)	4.18	(1.90)
16C	12 3/4	(323.85)	16	18	(457.20)	12	(300)	6.28	(2.85)
16D	12 3/4	(323.85)	14	24	(609.60)	12	(300)	10.90	(4.94)
17B	14	(355.60)	16	12	(304.80)	14	(350)	4.58	(2.08)
17D	14	(355.60)	14	24	(609.60)	14	(350)	12.25	(5.56)
18B	15	(381.00)	16	12	(304.80)	16	(400)	4.90	(2.22)
18D	15	(381.00)	14	24	(609.60)	16	(400)	13.00	(5.90)
19B	16	(406.40)	16	12	(304.80)	16	(400)	5.20	(2.35)
19D	16	(406.40)	14	24	(609.60)	16	(400)	13.81	(6.26)
20B	17	(431.80)	16	12	(304.80)	18	(450)	5.53	(2.51)
20D	17	(431.80)	14	24	(609.60)	18	(450)	14.56	(6.60)
21B	18	(457.20)	16	12	(304.80)	18	(450)	6.20	(2.81)
21D	18	(457.20)	14	24	(609.60)	18	(450)	15.46	(7.01)
21E	18	(457.20)	12	24	(609.60)	18	(450)	21.25	(9.64)
22B	19	(482.60)	16	12	(304.80)	20	(500)	6.50	(2.95)
22D	19	(482.60)	14	24	(609.60)	20	(500)	16.32	(7.40)
22E	19	(482.60)	12	24	(609.60)	20	(500)	22.41	(10.17)
23B	20	(508.00)	16	12	(304.80)	20	(500)	7.25	(3.29)
23D	20	(508.00)	14	24	(609.60)	20	(500)	17.18	(7.79)
23E	20	(508.00)	12	24	(609.60)	20	(500)	24.75	(11.23)
24B	21	(533.40)	16	12	(304.80)	24	(600)	7.30	(3.31)
24E	21	(533.40)	12	24	(609.60)	24	(600)	24.75	(11.23)
25B	22	(558.80)	16	12	(304.80)	24	(600)	7.60	(3.45)
25E	22	(558.80)	12	24	(609.60)	24	(600)	25.92	(11.76)
26B	23	(584.20)	16	12	(304.80)	24	(600)	7.75	(3.52)
26E	23	(584.20)	12	24	(609.60)	24	(600)	26.50	(12.02)
27B	24	(609.60)	16	12	(304.80)	24	(600)	8.00	(3.63)
27E	24	(609.60)	12	24	(609.60)	24	(600)	27.20	(12.34)
28E	26	(660.40)	12	24	(609.60)	30	(750)	28.00	(12.70)
29E	27	(685.80)	12	24	(609.60)	30	(750)	30.20	(13.70)
30E	28	(711.20)	12	24	(609.60)	30	(750)	32.50	(14.74)

Note: To determine proper size consult shield selection guide on page 28.

Unless otherwise specified, all dimensions on drawings and in charts are in inches and dimensions shown in parentheses are in millimeters.

PHD Manufacturing, Inc.

Vermont Agency of Transportation
RECEIVED
Pipe Shield.pdf

CK'D BY D. PETERSON OK'D BY C. CARLSON

February 20, 2015

RESUBMIT NO Approved
BY C. CARLSON DATE 03/04/2015

FERGUSON® a WOLSELEY company
429 Troy Avenue • Colchester, VT 05446
Phone: 802-655-3505 • Fax: 802-655-7943
www.ferguson.com
Nobody expects more from us than we do℠

	Type 1 Bolts			
Element	Carbon Steel	Carbon Boron Steel	Alloy Steel	Alloy Boron Steel
Carbon	0.30 - 0.52%	0.30 - 0.52%	0.30 - 0.52%	0.30 - 0.52%
Manganese, min	0.60%	0.60%	0.60%	0.60%
Phosphorus, max	0.040%	0.040%	0.035%	0.035%
Sulfur, max	0.050%	0.050%	0.040%	0.040%
Silicon	0.15-0.30%	0.10 - 0.30%	0.15 - 0.35%	0.15 - 0.35%
Boron		0.0005 - 0.003%		0.0005 - 0.003%
Alloying Elements			*	*

* Steel, as defined by the American Iron and Steel Institute, shall be considered to be alloy when the maximum range given for the content of alloying elements exceeds one of more of the following limits: Manganese, 1.65%, silicon, 0.60%, copper, 0.60%, or in which a definite range or a minimum quantity of any of the following elements is specified or required within the limits of the recognized field of constructional alloy steels: aluminum, chromium up to 3.99%, cobalt, columbium, molybdenum, nickel, titanium, tungsten, vanadium, zirconium or any other alloying elements added to obtain a desired alloying effect.

A325 Recommended Hardware

Nuts			Washers	
Type 1		Type 3	Type 1	Type 3
Plain	Galvanized	Plain		
A563C, C3, D, DH, DH3	A563DH	A563C3, DH3	F436-1	F436-3

Note: Nuts conforming to A194 Grade 2H are a suitable substitute for use with A325 heavy hex structural bolts. The ASTM A563 Nut Compatibility Chart has a complete list of specifications.

FERGUSON®
a WOLSELEY company
429 Troy Avenue • Colchester, VT 05446
Phone: 802-655-3505 • Fax: 802-655-7943
www.ferguson.com
Nobody expects more from us than we do℠

Vermont Agency of Transportation
RECEIVED
CK'D BY D. PETERSON OK'D BY C. CARLSON
February 20, 2015
RESUBMIT NO Approved
BY C. CARLSON DATE 03/04/2015

ASTM A325

Scope

The ASTM A325 specification covers high strength heavy hex structural bolts from 1/2" diameter through 1-1/2" diameter. These bolts are intended for use in structural connections and therefore have shorter thread lengths than standard hex bolts. Refer to the Structural Bolts page of our site for thread lengths and other related dimensions.

This specification is applicable to heavy hex structural bolts only. For bolts of other configurations and thread lengths with similar mechanical properties, see Specification A449.

Bolts for general applications, including anchor bolts, are covered by Specification A 449. Also refer to Specification A 449 for quenched and tempered steel bolts and studs with diameters greater than 1-1/2" but with similar mechanical properties.

A325 Types

TYPE 1	Medium carbon, carbon boron, or medium carbon alloy steel.
TYPE 2	Withdrawn November 1991.
TYPE 3	Weathering steel.
T	Fully threaded A325. *(Restricted to 4 times the diameter in length)*
M	Metric A325.

A325 Connection Types

SC	Slip critical connection.
N	Bearing type connection with threads included in the shear plane.
X	Bearing-type connection with threads excluded from the shear plane.

A325 Mechanical Properties

Size	Tensile, ksi	Yield, ksi	Elong. %, min	RA %, min
1/2 - 1	120 min	92 min	14	35
1-1/8 - 1-1/2	105 min	81 min	14	35

A325 Chemical Properties

FERGUSON®
a WOLSELEY company
429 Troy Avenue • Colchester, VT 05446
Phone: 802-655-3505 • Fax: 802-655-7943
www.ferguson.com
Nobody expects more from us than we do℠