* Frame & Grate will be galvanized *
Eric SDI 2/17/15

Requries Galvanizing per note on plan sheet #28

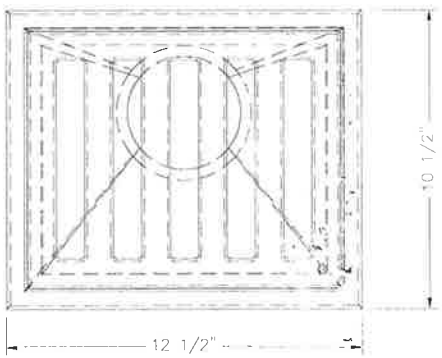

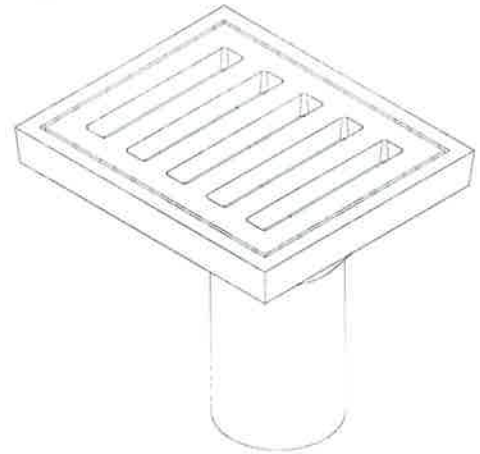

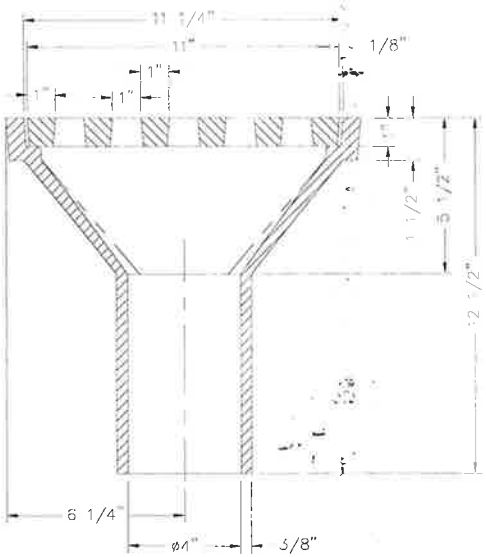

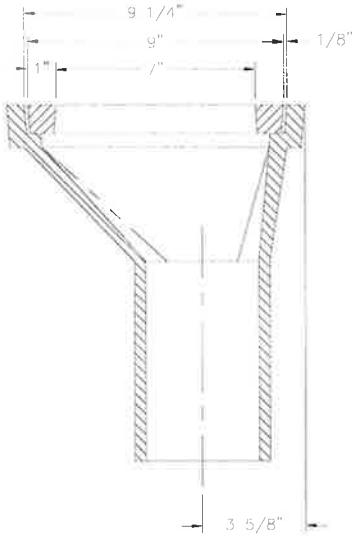

Vermont Agency of Transportation

RECEIVED

Bridge Scupper ReSubmittal 021715.pdf

CK'D BY D. PETERSON **OK'D BY** C. CARLSON

February 17, 2015

RESUBMIT NO **Approved**

BY C. CARLSON **DATE** 02/17/2015

COMPONENT NOS.: SCUPPER 4015-0001, GRATE 4015-0002
MATERIAL: CAST GRAY IRON ASTM A-48, CLASS 35B
FINISH: NO PAINT UNLESS SPECIFIED ON PURCHASE ORDER
WEIGHT: SCUPPER 42#, GRATE 13#

DR RKB	SCALE 1/4"=1"	TITLE R-4015-A ROADWAY DRAIN	
CH			
APP	DM DIK	NEENAH FOUNDRY	NF-4015 400 B
DATE 07-24-2009			
www.neenahfoundry.com		PHONE: 1-800-558-5075	

CAD DWG REF: 4015400.DWG-

QUOTATION

Q596312

NEENAH FOUNDRY COMPANY

PO Box 729
Neenah WI 54957
Phone: (866) 830-5073
Fax: (920) 729-3661
cynthia.bartlett@neenahenterprises.com

S D IRELAND COMPANIES
P O BOX 2286
S BURLINGTON VT 05407

DATE: **February 5, 2015**

REFERENCE:

Attn: Eric Barendse
Phone #: (802) 658-0201 **ext:** 253
Fax #: (802) 860-1528

Email: ebarendse@sdireland.com

We are pleased to submit the following quotation in accordance with your request.

Quantity	Catalog No.	Description	Each Wt.	Price	Units
	*	**With type P grate and frame and grate to be galvanized** *			
~~2~~ Sets	R-4015-B1	SCUPPER, type A, regular seat, GI	42#		/Set
		GRATE, type P, regular seat, GI, * perma-grip	14#		
1 set		**TOTAL OF ~~2 Sets~~ 1 set R-4015-B1**			
		Price does not include shipping.			

* frame & grate to be galvanized per note #3 on sheet 28 *

Vermont Agency of Transportation
RECEIVED
CK'D BY D. PETERSON OK'D BY C. CARLSON
February 17, 2015
RESUBMIT NO Approved
BY C. CARLSON DATE 02/17/2015

TOTAL ESTIMATED WEIGHT: **112** **lbs**
(Excluding Skids)

Neenah Foundry Terms & Conditions apply and are available by fax or mail upon request. Castings furnished unpainted. Quantities are approximate, changes could alter unit prices. Estimated shipping & handling based on above quantities, shipping in one complete shipment. Any order submitted pursuant to this quotation shall not result in a contract until it is accepted and acknowledged in writing by Neenah Foundry Company (SELLER).

Prices are valid on orders entered within 30 days from date of quotation, with shipment at earliest availability. All orders are subject to review of buyer's credit status. Standard terms for qualified customers are Net 30 Days. Prices do not include tax. If tax exempt, a valid tax exemption certificate is required at time of order or any applicable tax will be charged.

NEENAH FOUNDRY COMPANY

BY _____

Cindy Bartlett

CS/Inside Sales

FOB NEENAH WI

cc: Lesa Girard

(1725)