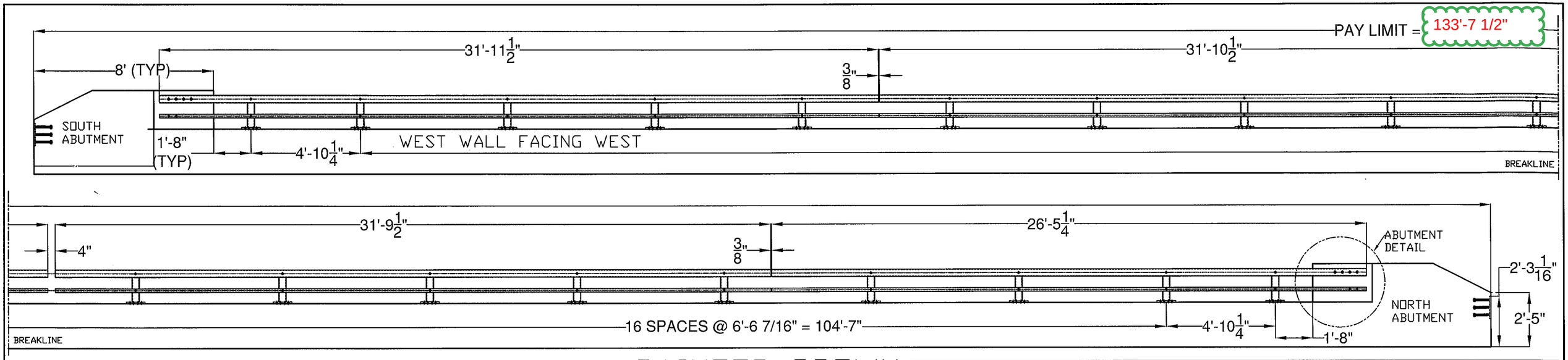

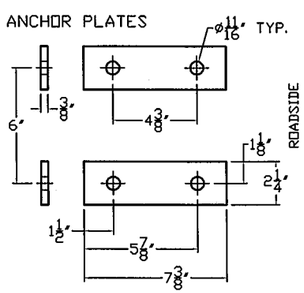

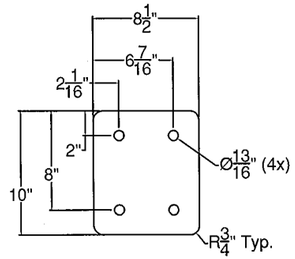

1/8" Elastomeric Pad

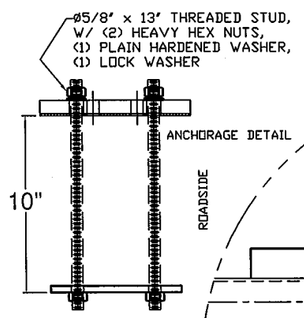

PAINTED BROWN
ASTM 708.03

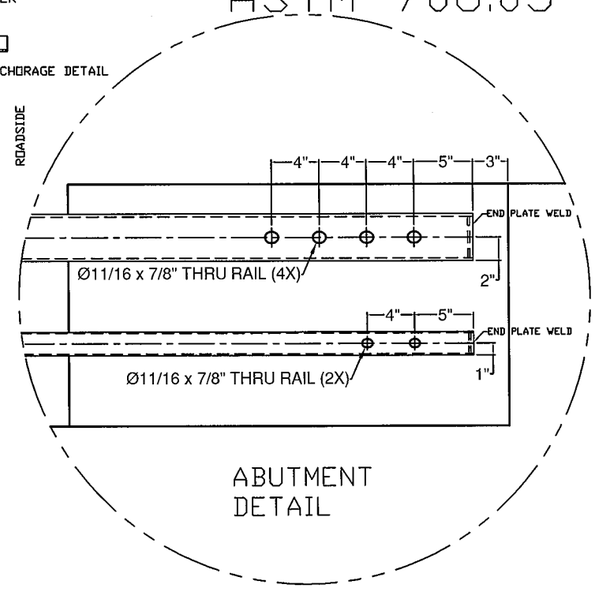

ABUTMENT DETAIL

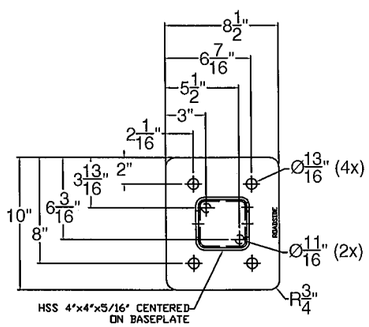

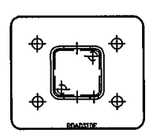

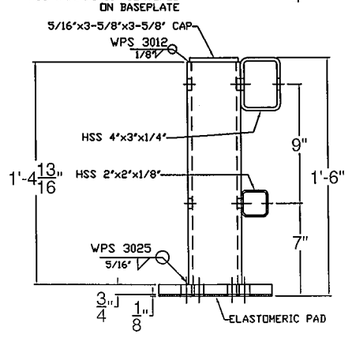

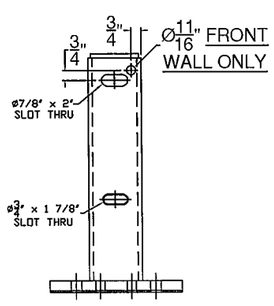

NOTES:

1. ALL WORK AND MATERIALS SHALL CONFORM TO SECTION 525.
2. PRIOR TO GALVANIZING THE ASSEMBLED POST, GRIND ALL EDGES TO A MINIMUM RADIUS OF 1/16".
3. ALL POSTS SHALL BE SET NORMAL TO GRADE.
4. SECTIO[illegible] OF TWO BRIDGE POSTS AND PREFERABLY TO AT LEAST 4 POSTS.
5. HOLES [illegible] ILLED.
6. BOLTS [illegible] FT-LB).
7. RAIL TI[illegible] DY ASTM A449 (TYPE I) ROUND HEAD BOLTS INSERTED THROUGH THE FA[illegible]
8. SEE ST[illegible] . A DELINEATOR SHALL BE INSTALLED AT 30 FOOT SPACING OR THE NE[illegible] RIVER'S RIGHT. FOR ONE WAY BRIDGES, YELLOW IS TO BE INSTALL[illegible] ORS SHALL BE INCIDENTAL TO OTHER ITEMS.
9. AESTHE[illegible] IED IN THE CONTRACT PLANS. IF NONE IS SPECIFIED IT SHALL NOT BE [illegible] HEET MAY ALSO BE APPLIED ON THE FASCIA SIDE OF THE RAIL, IF SPE[illegible]
10. BRIDGE [illegible] ANCE WITH SECTION 501.
11. THIS R[illegible] ORT 350 TL-4 SERVICE LEVEL.
12. HOLES FOR MOUNTING DELINEATORS TO BE FIELD DRILLED. HOLES SHALL BE COATED WITH AN APPROVED ZINC-RICH PAINT PRIOR TO INSTALLATION.
13. ALL STEEL COMPONENTS OF BRIDGE RAILING AND BOX BEAM GUARDRAIL, INCLUDING THE RAIL CONNECTION TO THE BRIDGE RAIL SHALL BE GALVANIZED IN ACCORDANCE WITH THE STANDARD SPECIFICATIONS AND SURFACE PREPARED FOR PAINTING IN ACCORDANCE WITH ASTM D 6386. COMPONENTS SHALL BE PAINTED BROWN IN ACCORDANCE WITH SUBSECTION 708.03.

Vermont Agency of Transportation
RECEIVED
CK'D BY D. PETERSON OK'D BY C. CARLSON
March 6, 2015
RESUBMIT NO Approved AsNoted
BY C. CARLSON DATE 03/09/2015

BILL OF MATERIAL

ITEM #	QTY	PART #	DESCRIPTION	ASTM DESIGNATION
1	19	0033.90017	TWO RAIL POST & BASE PLATE ASSEMBLY	A572 Gr. 50, A500 Gr. B
2	1	0033.91358	4" X 3" X 1/4" RAIL @ 31'-11 1/2" W/ END PLATES	A500 Gr. B
3	1	0033.91359	4" X 3" X 1/4" RAIL @ 31'-10 1/2"	A500 Gr. B
4	1	0033.91360	4" X 3" X 1/4" RAIL @ 31'-9 1/2"	A500 Gr. B
5	1	0033.91361	4" X 3" X 1/4" RAIL @ 26'-5 1/4" W/ END PLATES	A500 Gr. B
6	1	0033.91362	2" X 2" X 1/8" RAIL @ 31'-11 1/2" W/ END PLATES	A500 Gr. B
7	1	0033.91363	2" X 2" X 1/8" RAIL @ 31'-10 1/2"	A500 Gr. B
8	1	0033.91364	2" X 2" X 1/8" RAIL @ 31'-9 1/2"	A500 Gr. B
9	1	0033.91365	2" X 2" X 1/8" RAIL @ 26'-5 1/4" W/ END PLATES	A500 Gr. B
10	2	0033.90069	1-1/2" X 1-1/2" FIX. SPL BAR @ 2' 4"	A572 Gr. 50
11	2	0033.90071	2-1/4" X 3-1/4" FIX. SPL. BAR @ 2' 4"	A572 Gr. 50
12	1	0033.90328	1-1/2" X 1-1/2" EXP. SPL BAR @ 2' 4"	A572 Gr. 50
13	1	0033.90072	2-1/4" X 3-1/4" EXP. SPL. BAR @ 2' 4"	A572 Gr. 50
14	38	0033.00295	3/8" X 2 1/4" X 7 3/8" ANCHOR PLATES	A36
15	78*	0042.05813	ø 5/8" X 13" ANCHOR STUDS	A449
16	154*	0080.15901	ø 5/8" HEAVY HEX NUTS	A563
17	76	0080.15911	ø 5/8" FLAT WASHERS	F436
18	76	0080.15920	ø 5/8" LOCK WASHERS	ASME D18.2
19	19	0080.05565	ø 5/8" X 7 1/2" SLOTTED, ROUND HEAD BOLT, NUT, F.W., & L.W.	A449, A563 DH, F436, & ASME D18.21.1
20	19	0080.06410	ø 3/4" X 8 1/2" SLOTTED, ROUND HEAD BOLT, NUT, F.W., & L.W.	A449, A563 DH, F436, & ASME D18.21.1
21	12	0080.05275	ø 5/8" X 3" HEX BOLT, NUT, F.W., & L.W.	A325, A563 DH, F436, & ASME D18.21.1
22	12	0080.07330	ø 7/8" X 5 1/2" HEX BOLT, NUT, F.W., & L.W.	A325, A563 DH, F436, & ASME D18.21.1
23	4	0080.05760	ø 5/8" X 13" SLOTTED, ROUND HEAD BOLT, NUT, F.W., & L.W.	A449, A563 DH, F436, & ASME D18.21.1
24	8	0080.07710	ø 7/8" X 14" SLOTTED, ROUND HEAD BOLT, NUT, F.W., & L.W.	A449, A563 DH, F436, & ASME D18.21.1
25	19	0033.00053	1/8" ELASTOMERIC PAD	D2240
26	2	0033.90410	APPROACH, END WALL CONNECTORS	PER BOM
27	2	0033.90411	TRAILING, END WALL CONNECTORS	PER BOM
28	5		DELINEATORS (SUPPLIED BY F.R. LaFAYETTE)	ALUMINUM

*-2 EXTRA FOR VOAT TESTING

HARDWARE NOTES

ITEM #	FUNCTION
19	BOLT BOTTOM RAIL TO POST (ITEM #1)
20	BOLT TOP RAIL TO POST (ITEM #1)
21	BOLT BOTTOM SPLICE BARS (ITEM #6) TO BOTTOM RAIL
22	BOLT TOP SPLICE BARS (ITEM #7) TO TOP RAIL
23	BOLT BOTTOM RAIL TO END ABUTMENT
24	BOLT TOP RAIL TO END ABUTMENT

ITEM #: 525.45

SHEET 1 OF 3

STRUCTURAL STEEL TO COMPLY W/ ASTM A6

TOLERANCE UNLESS OTHERWISE NOTED:
FRACTIONS = ± 1/16"
ANGLES = ± 1/2°
DIAMETERS = ± 1/32"

BRIDGE RAIL DETAILS SHEET

PROJECT: STOWE BRF 0235 (11), VT. RT. 108, MAJOR COLLECTOR, BRIDGE #2
TOWN OF STOWE, LAMOILLE COUNTY

REV	NO.	DATE	DESCRIPTION	BY	REV	NO.	DATE	DESCRIPTION	BY
E	1	3/5/15	REVISE PER 1/26/15 MARK-UP	E.P.	E				
V					V				

ELDERLEE, INC.
OAKS CORNERS, NEW YORK 14518
E-Mail: dlong@elderlee.com / epeek@elderlee.com
Tel: 315-789-6670 Fax: 315-789-6615

AISC CERTIFIED FABRICATOR

DRAWN	E.P.	1/13/15
CHECKED	D.L.	1/15/15
APPROVED		
SCALE	SCHEMATIC	
DRAWING NO.	FR L - STOWE	

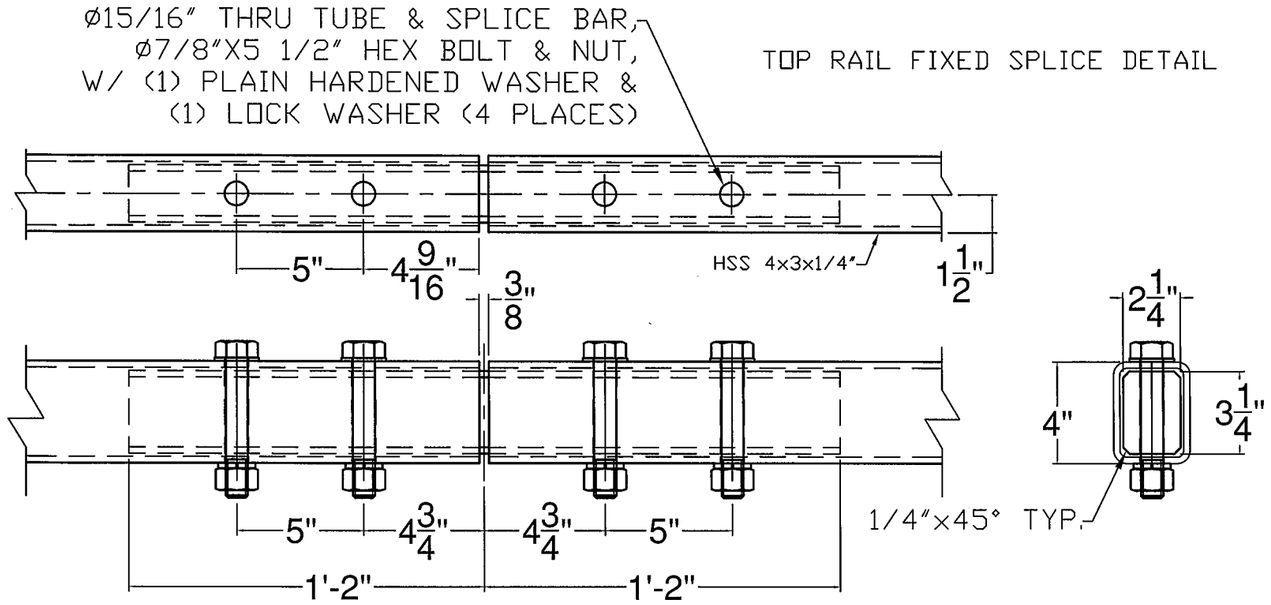

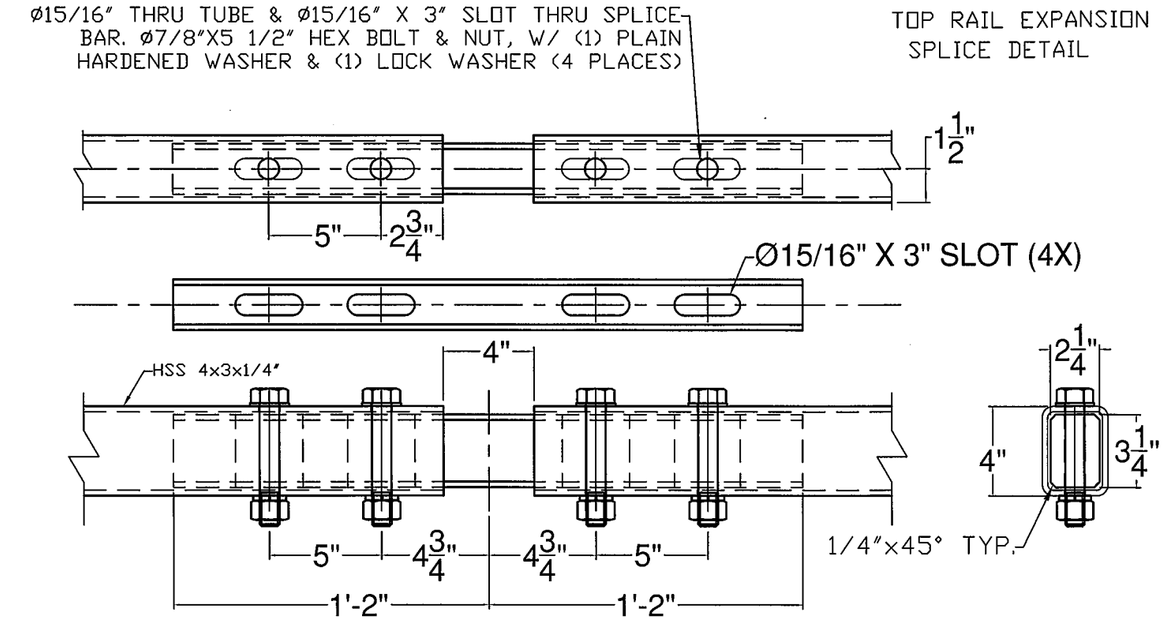

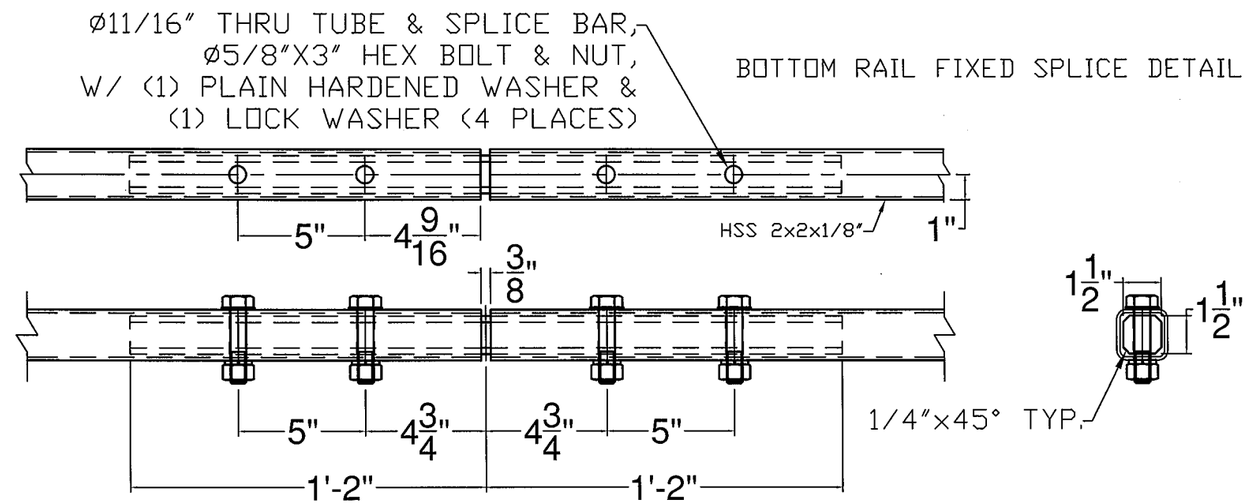

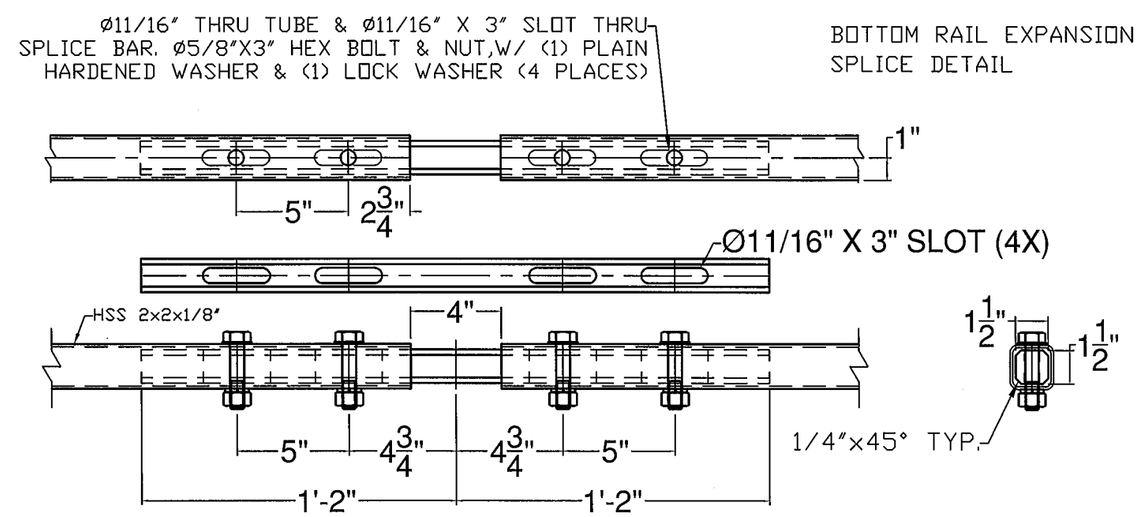

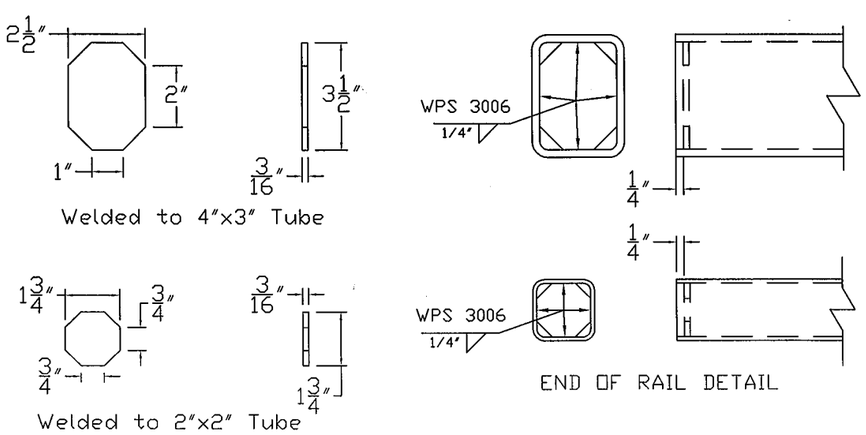

Vermont Agency of Transportation
RECEIVED
Stowe BRF 0235 (11) Rev1.pdf

CK'D BY D. PETERSON OK'D BY C. CARLSON

March 6, 2015

RESUBMIT NO Approved

BY C. CARLSON DATE 03/09/2015

ITEM #: 525.45

SHEET 2 OF 3

STRUCTURAL STEEL TO COMPLY W/ ASTM A6

TOLERANCE UNLESS OTHERWISE NOTED:
FRACTIONS = ± 1/16"
ANGLES = ± 1/2°
DIAMETERS = ± 1/32"

BRIDGE RAIL DETAILS SHEET

PROJECT: STOWE BRF 0235 (11), VT. RT. 108, MAJOR COLLECTOR, BRIDGE #2
TOWN OF STOWE, LAMOILLE COUNTY

REV	NO.	DATE	DESCRIPTION	BY	REV	NO.	DATE	DESCRIPTION	BY
	1	3/5/15	ADDED END OF RAIL DETAIL	E.P.					

ELDERLEE, INC.
OAKS CORNERS, NEW YORK 14518
E-Mail: dlong@elderlee.com / epeek@elderlee.com
Tel: 315-789-6670 Fax: 315-789-6615

CERTIFIED FABRICATOR

DRAWN	E.P.	1/13/15
CHECKED	D.L.	1/15/15
APPROVED		
SCALE	SCHEMATIC	
DRAWING NO.	FR L - STOWE	

BILL OF MATERIALS			
ITEM #	QTY	DESCRIPTION	ASTM #
1	1	TUBE WALL PLATE - 3/4" X 11" x 12"	ASTM A572 Gr. 50
2	6	Ø3/4" X 8" STUD	TO BE PURCHASED
3	1	5" X 5" X 5/16" TUBE W/ SLOTS @ 19 5/16"	ASTM A500 Gr. B
4	1	SHIM PL 1/2" X 4" X 16" W/ SLOTS	ASTM A709 Gr. 36 CVN
5	1	SHIM PL 1/2" X 4" X 16" (W/O SLOTS)	ASTM A709 Gr. 36 CVN

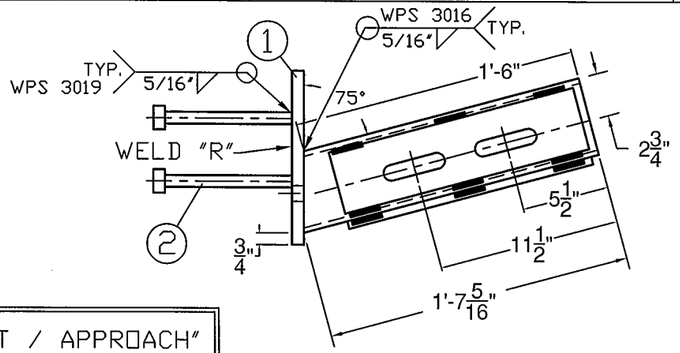

"RIGHT / APPROACH"

PROTRUSIONS CAUSED BY WELDING OR GALVANIZING ARE NOT PERMITTED ON THE SPLICE TUBES AND FILL PLATES

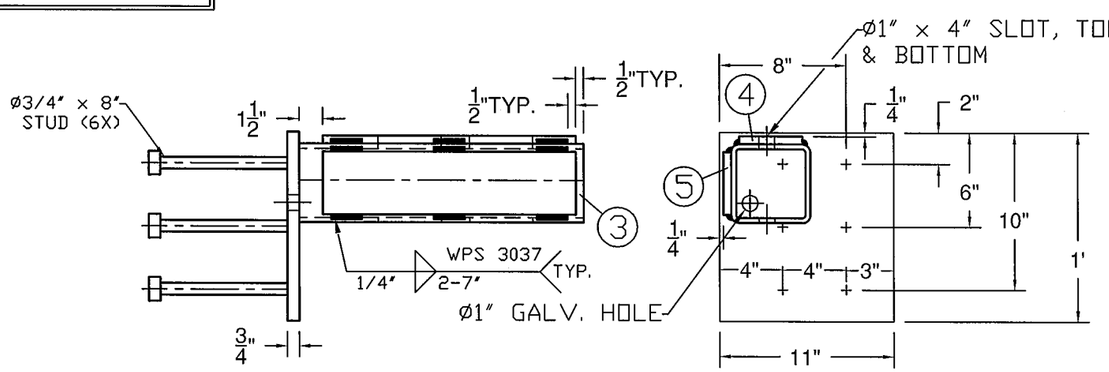

15° SKEW NOT SHOWN IN THESE VIEWS

BILL OF MATERIALS			
ITEM #	QTY	DESCRIPTION	ASTM #
1	1	TUBE WALL PLATE - 3/4" X 11" x 12"	ASTM A572 Gr. 50
2	6	Ø3/4" X 8" STUD	TO BE PURCHASED
3	1	5" X 5" X 5/16" TUBE W/ SLOTS @ 19 5/16"	ASTM A500 Gr. B
4	1	SHIM PL 1/2" X 4" X 16" W/ SLOTS	ASTM A709 Gr. 36 CVN
5	1	SHIM PL 1/2" X 4" X 16" (W/O SLOTS)	ASTM A709 Gr. 36 CVN

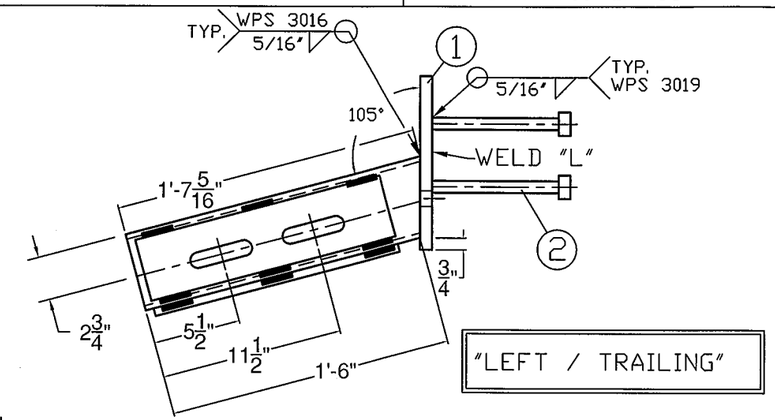

"LEFT / TRAILING"

PROTRUSIONS CAUSED BY WELDING OR GALVANIZING ARE NOT PERMITTED ON THE SPLICE TUBES AND FILL PLATES

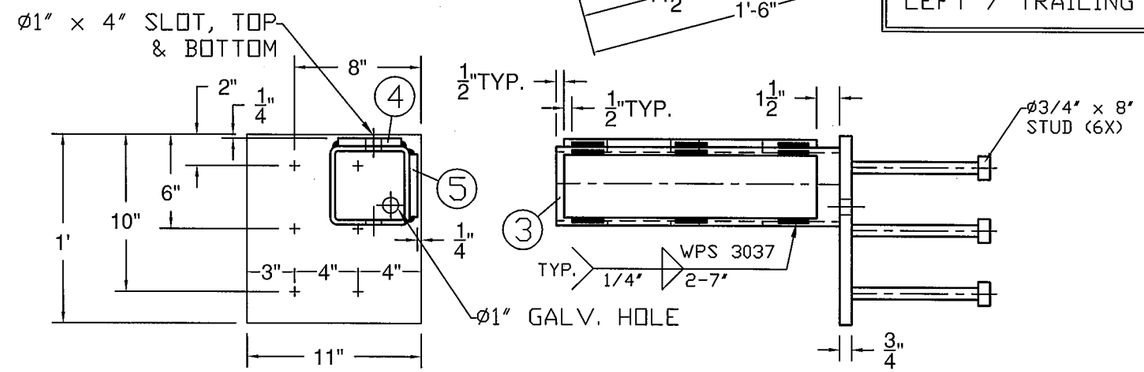

15° SKEW NOT SHOWN IN THESE VIEWS

Vermont Agency of Transportation

RECEIVED

Stowe BRF 0235 (11) Rev1.pdf

CK'D BY D. PETERSON OK'D BY C. CARLSON

March 6, 2015

RESUBMIT NO Approved

BY C. CARLSON DATE 03/09/2015

ITEM #: 525.45

SHEET 3 OF 3

STRUCTURAL STEEL TO COMPLY W/ ASTM A6

TOLERANCE UNLESS OTHERWISE NOTED:
FRACTIONS = ± 1/16"
ANGLES = ± 1/2°
DIAMETERS = ± 1/32"

BRIDGE RAIL DETAILS SHEET

PROJECT: STOWE BRF 0235 (11), VT. RT. 108, MAJOR COLLECTOR, BRIDGE #2
TOWN OF STOWE, LAMOILLE COUNTY

R E V	NO.	DATE	DESCRIPTION	BY	R E V	NO.	DATE	DESCRIPTION	BY

ELDERLEE, INC.
OAKS CORNERS, NEW YORK 14518
E-Mail: dlong@elderlee.com / epeek@elderlee.com
Tel: 315-789-6670 Fax: 315-789-6615

CERTIFIED FABRICATOR

DRAWN	E.P.	1/13/15
CHECKED	D.L.	1/15/15
APPROVED		
SCALE	SCHEMATIC	
DRAWING NO.	FR L - STOWE	