ROADWAY TYPICALS

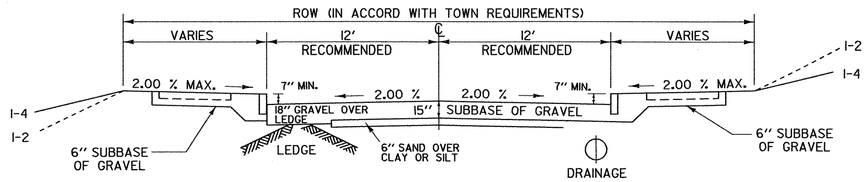

TYPICAL - CURBED SECTION WITH 5' SIDEWALKS

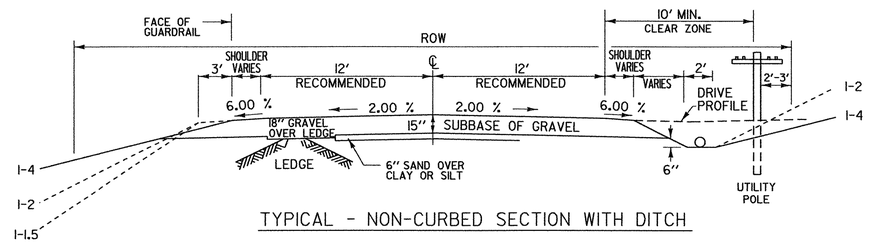

TYPICAL - NON-CURBED SECTION WITH DITCH

CUL-DE-SAC FOR DEAD END ROADS

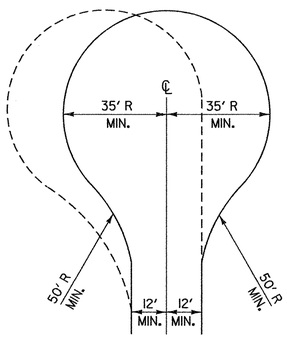

INTERSECTION OF THROUGH ROAD AND SIDE ROAD

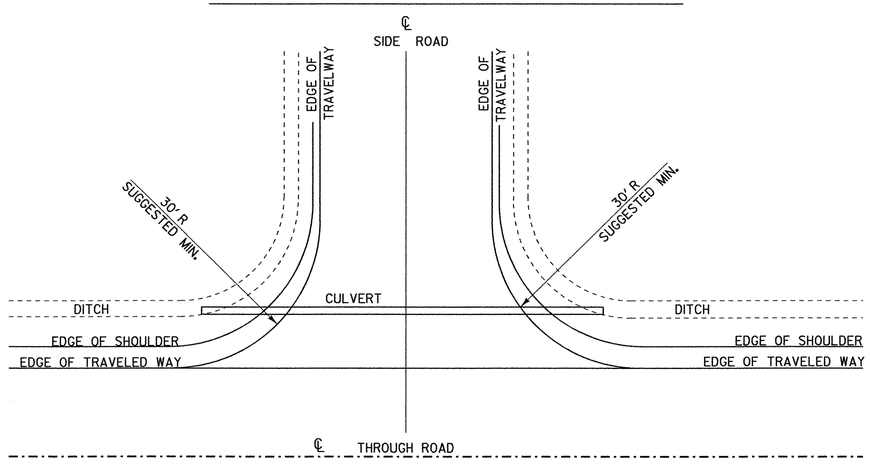

FOR THROUGH ROADS WITH SIDEWALKS & CURBING, SEE STANDARDS C2 & C3.
PROVIDE DROP INLETS ON EACH SIDE OF SIDE ROAD AT INTERSECTION AS NECESSARY.

PROFILE OF INTERSECTION (CUT SECTION)
SHOWING 5" DEPRESSION

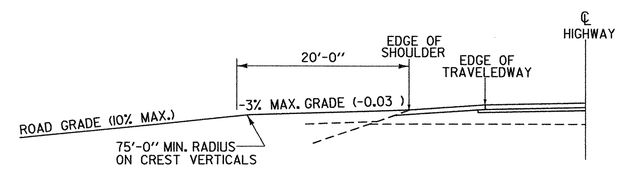

PROFILE OF INTERSECTION (FILL SECTION)

GENERAL NOTES FOR LOCAL ROADS

1. SUBBASE, SAND CUSHION AND SUBGRADE SHOULD BE CONSTRUCTED AND COMPACTED TO THE DIMENSIONS SHOWN IN ACCORDANCE WITH VAOT STANDARD SPECIFICATIONS FOR CONSTRUCTION. WHERE LOCAL ORDINANCES HAVE BEEN ADOPTED RELATIVE TO ROAD DIMENSIONS AND CONSTRUCTION, THEY SHOULD GOVERN. THE DIMENSIONS SUGGESTED ARE INTENDED TO BE APPLIED ONLY IN LOW TRAFFIC VOLUME CONDITIONS (AVERAGE DAILY TRAFFIC LESS THAN 250 VEHICLES PER DAY), AND WHERE HEAVY TRUCK TRAFFIC IS INFREQUENT.
2. EXPOSED EARTH SLOPES SHOULD BE SEEDED, FERTILIZED AND MULCHED IN ACCORDANCE WITH VAOT STANDARD SPECIFICATIONS FOR CONSTRUCTION.
3. DRAINAGE:

   ROADWAY - 18" MINIMUM DIAMETER, OF METAL, REINFORCED CONCRETE OR POLYETHYLENE PIPE, WITH DROP INLETS OR CATCH BASINS, AS REQUIRED. HYDRAULIC ANALYSIS TO DETERMINE APPROPRIATE PIPE DIAMETER IS RECOMMENDED FOR ALL LIVE STREAM CROSSINGS AND ELSEWHERE WHERE LARGE STORM FLOWS MAY BE EXPECTED.

   DRIVES - 15" MINIMUM DIAMETER, OF METAL, REINFORCED CONCRETE OR POLYETHYLENE PIPE.

   UNDERDRAIN - 6" MINIMUM DIAMETER, OF METAL, PVC PLASTIC OR POLYETHYLENE PIPE.

   LOCATION, DEPTH AND CONSTRUCTION DETAILS SHOULD FOLLOW PRACTICE SPECIFIED BY LOCAL ORDINANCE OR THE VAOT STANDARD SPECIFICATIONS FOR CONSTRUCTION.
4. HORIZONTAL CURVATURE - THE FOLLOWING WILL APPLY:

DESIGN SPEED	MINIMUM RADII RURAL (1)	MINIMUM RADII URBAN (2)
25 MPH	185 FT.	180 FT.
30 MPH	275 FT.	300 FT.
35 MPH	380 FT.	460 FT.
40 MPH	510 FT.	675 FT.
45 MPH	660 FT.	945 FT.
50 MPH	835 FT.	1280 FT.

(1) BASED ON CROSS SLOPE = 6.0 %
(2) BASED ON MAINTAINING NORMAL CROWN SECTION THROUGHOUT CURVE : EFFECTIVE CROSS SLOPE = 2.0 %

FOR OTHER SUPERELEVATION RATES, SEE CHAPTER III OF THE AASHTO "A POLICY ON GEOMETRIC DESIGN OF HIGHWAYS AND STREETS" FOR APPROPRIATE CURVE RADII.

5. GRADIENT OF ROADS - 10% MAXIMUM GRADE SUGGESTED, ALTHOUGH GRADES UP TO 16 % MAY BE ALLOWED IN MOUNTAINOUS TERRAIN.
6. GUARD RAIL - PROVIDE GUARD RAIL WITH TREATED WOOD OR STEEL POSTS, OF A DESIGN IN ACCORDANCE WITH VAOT STANDARD SPECIFICATIONS FOR CONSTRUCTION, THE AASHTO ROADSIDE DESIGN GUIDE, AND VAOT STANDARD DRAWINGS. GENERALLY, WHERE SLOPES ARE 1:3 OR STEEPER, AND THE HEIGHT OF DROPOFF AT EDGE OF SHOULDER EXCEEDS 5', GUARD RAIL SHOULD BE INSTALLED. ALSO, WHERE SLOPES ARE 1:3 OR FLATTER, GUARD RAIL MAY NOT BE NEEDED IF THE AREA AT THE BOTTOM OF THE SLOPE IS FREE OF HAZARDS. THE LOCAL VAOT DISTRICT TRANSPORTATION ADMINISTRATOR MAY BE CONTACTED FOR ASSISTANCE.
7. PAVING - ROADS WITH GRADES EXCEEDING 7% SHOULD BE PAVED UNLESS WAIVED BY THE LOCAL GOVERNING BODY. FOR TRAFFIC VOLUMES GREATER THAN, OR EQUAL TO, 250 VEHICLES PER DAY, OR WHERE HEAVY TRUCKS ARE COMMON, A PAVEMENT DESIGN SHOULD BE PERFORMED TO DETERMINE APPROPRIATE THICKNESSES OF SUBBASE AND PAVEMENT.
8. TRAVELED WAY AND SHOULDER WIDTHS - WIDTHS SHOWN ON THIS STANDARD ARE FOR LOW SPEED/LOW TRAFFIC VOLUME CONDITIONS. FOR ADDITIONAL GUIDANCE IN THE DESIGN OF LOCAL ROADS AND STREETS, SEE THE LATEST EDITION OF AASHTO'S PUBLICATION "A POLICY ON GEOMETRIC DESIGN OF HIGHWAYS AND STREETS", OR THE VAOT "VERMONT STATE STANDARDS".
9. UTILITY LINE LOCATION TO CONFORM TO LOCAL REQUIREMENTS.

REVISIONS AND CORRECTIONS

JAN. 21, 1971 - ORIGINAL DATE OF ISSUE
MAR. 12, 1971 - DIMENSIONS CHANGED ON TURN-A-ROUND
JULY 13, 1973 - INTERSECTION PROFILES ADDED
DEC. 7, 1993 - REVISED TO REFLECT CURRENT DESIGN CRITERIA
JUNE 1, 1994 - REISSUED, WITHOUT CHANGE, UNDER NEW SIGNATURES.
MAR. 10, 1995 - REISSUED, WITHOUT CHANGE, UNDER NEW SIGNATURES.
MARCH 3, 2003 - REVISED TO REFLECT CURRENT DESIGN CRITERIA

APPROVED

DIRECTOR OF PROGRAM DEVELOPMENT

C. Allan Wright
CHIEF OF UTILITIES

FEDERAL HIGHWAY ADMINISTRATION

STANDARDS FOR TOWN & DEVELOPMENT ROADS

VERMONT AGENCY OF TRANSPORTATION

STANDARD A-76

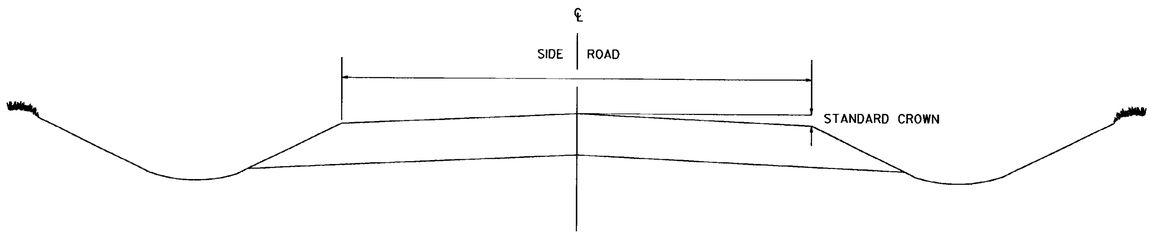

SECTION B - B

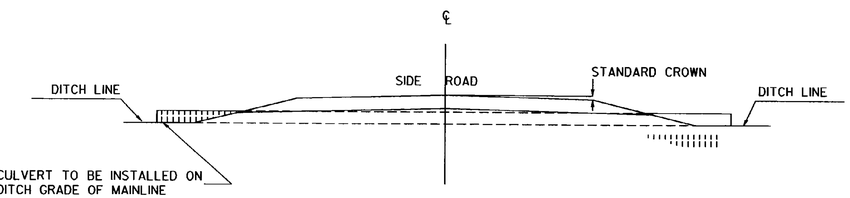

SECTION C - C

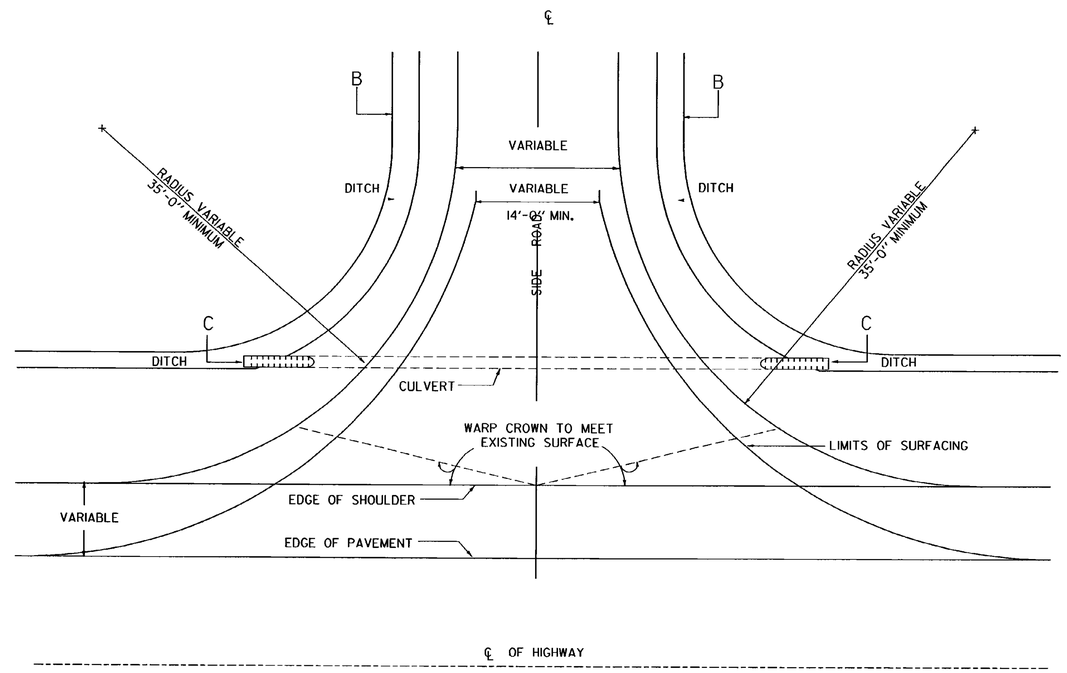

PLAN OF SIDE ROAD INTERSECTION

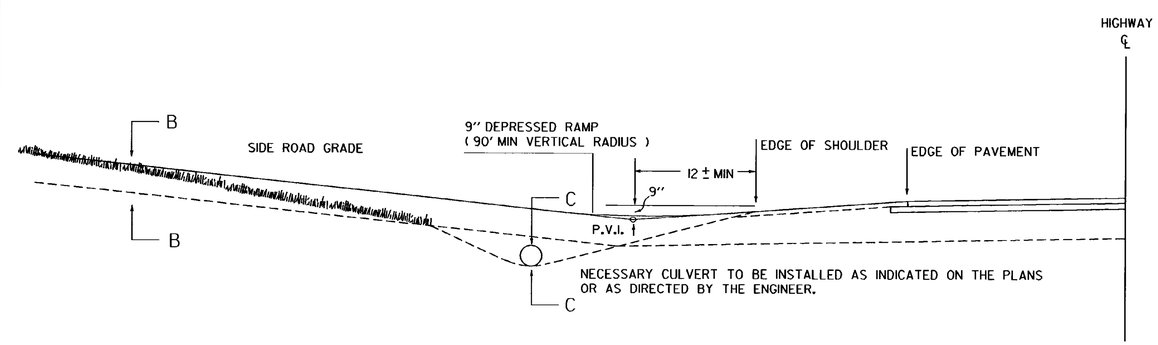

PROFILE OF SIDE ROAD INTERSECTION
SHOWING 9" DEPRESSED RAMP

REVISIONS AND CORRECTIONS

DEC. 14, 1971 - ORIGINAL APPROVAL DATE

JUNE 1, 1994 - REISSUED, WITHOUT CHANGE, UNDER NEW SIGNATURES.

APPROVED

APPROVED FOR THIS PROJECT AND/OR DESIGN IMPLEMENTATION. FHWA FINAL APPROVAL PENDING.

Gordon S. MacArthur, P.E.
DIRECTOR OF ENGINEERING

Robert M. Murphy, P.E.
DESIGN ENGINEER

SIDE ROAD INTERSECTION SHOWING DEPRESSED RAMP

VERMONT AGENCY OF TRANSPORTATION

STANDARD
B-12

DETAIL A — RESIDENTIAL DRIVE

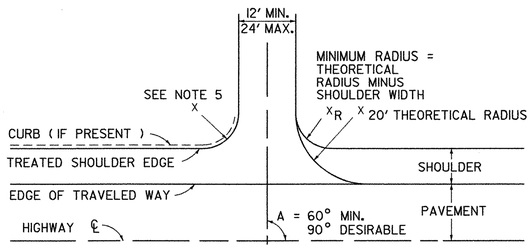

DETAIL B — DUAL COMMERCIAL DRIVE TO BE USED ONLY UNDER SPECIAL CONDITIONS

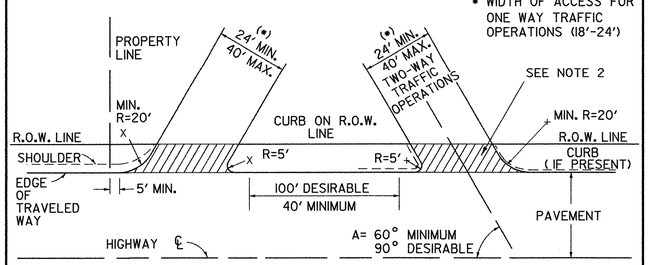

DETAIL C — TWO-WAY UNDIVIDED COMMERCIAL DRIVE FOR SINGLE STORES, BUSINESSES, SMALL HOUSING DEVELOPMENTS

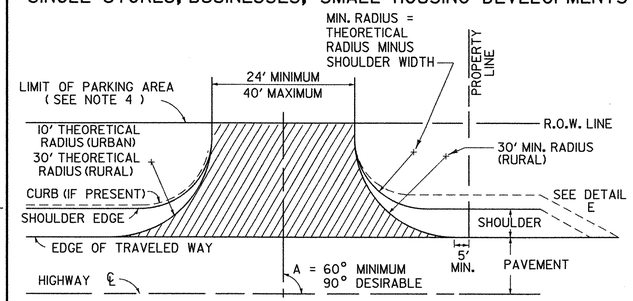

THIS DETAIL WILL ALSO APPLY TO COMMERCIAL SERVICE DRIVES, WHEN AUTHORIZED, HAVING A MAXIMUM WIDTH OF 20'. THE SERVICE DRIVE WILL HAVE A "SERVICE VEHICLES ONLY" SIGN PLACED AT THE HIGHWAY ROW LINE. SIGN SHALL BE 18"X 24" AS PRESCRIBED IN THE "STANDARD HIGHWAY SIGNS BOOK". A SUPPLEMENTAL PUBLICATION TO MUTCD.

DETAIL D — TWO-WAY COMMERCIAL DRIVE WITH DIVISIONAL ISLAND FOR SHOPPING CENTERS, LARGE HOUSING DEVELOPMENTS, INDUSTRIAL PLANTS AND SERVICE STATIONS

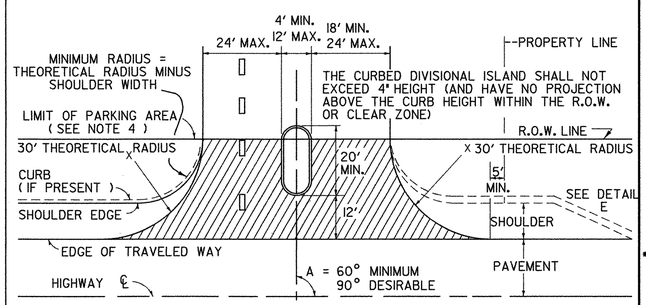

DETAIL E — RIGHT TURN LANE FOR COMMERCIAL DRIVE (UNSIGNALIZED INTERSECTIONS ONLY)

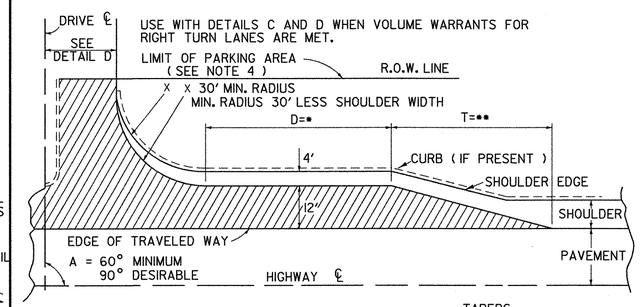

• STORAGE LENGTH IS VARIABLE DEPENDING ON TRAFFIC VOLUME AND MUST BE ADJUSTED TO PROVIDE PROPER DECELERATION LENGTH. REFER TO VAOT STANDARD E-192

TAPERS

SPEED (MPH)	30	35	40	50
••LENGTH (MIN)(FT)(T)	100	120	140	180
RATE	8:1	10:1	12:1	15:1

DETAIL F — MINIMUM HORIZONTAL SEPARATION BETWEEN DRIVEWAYS AND INTERSECTING SIDEROADS

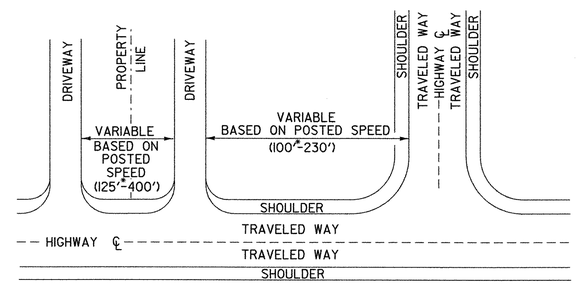

• MINIMUM UNLESS NO OTHER REASONABLE ACCESS IS AVAILABLE AND PRIOR APPROVAL IS GRANTED BY THE VAOT ITEMS SUCH AS TRAFFIC SIGNALS, HIGH TRAFFIC VOLUMES, OR FUNCTIONAL CLASS OF HIGHWAY SHOULD BE CONSIDERED WHEN DETERMINING APPROPRIATE SEPARATION DISTANCE. WHEN CURRENT RECOMMENDED SEPARATION DISTANCE CANNOT BE OBTAINED RESTRICTION OF TURNING MOVEMENTS MAY BE REQUIRED.

DETAIL G — PERSPECTIVE SKETCH OF DRIVE INTERSECTION SHOWING DEPRESSION

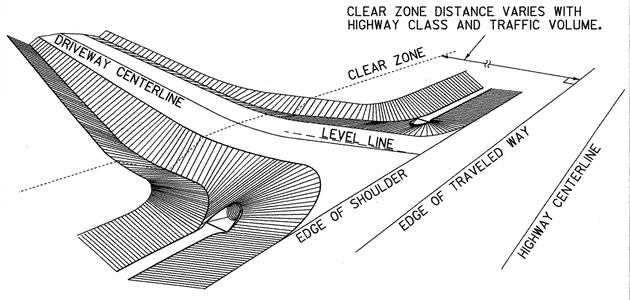

DETAIL H — PROFILE OF DRIVE INTERSECTION SHOWING 5" DEPRESSION (CUT SECTION)

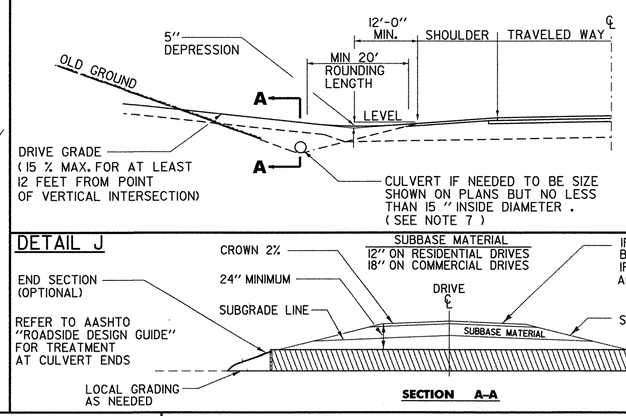

DETAIL I — PROFILE OF DRIVE INTERSECTION (FILL SECTION)

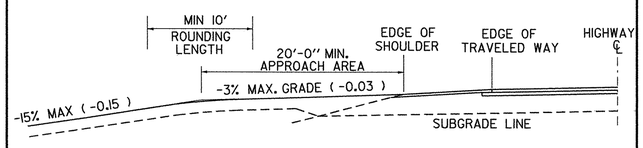

DETAIL J

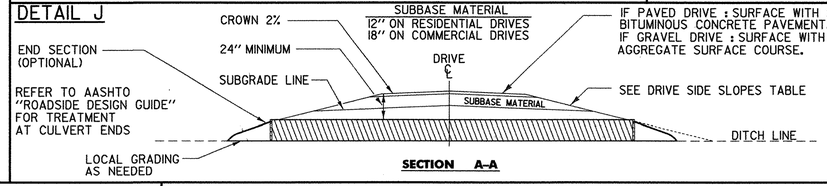

DRIVE SIDE SLOPES

LOCATION OF SLOPE	SLOPE RATE
V > 40 MPH	1:6 OR FLATTER
URBAN AREAS, OR V ≤ 40 MPH	1:4 DESIRABLE 1:2 ALLOWABLE
OUTSIDE CLEAR ZONE	1:2 OR FLATTER

NOTES:

1. THIS SHEET IS INTENDED FOR USE BY DESIGNERS ON HIGHWAY PROJECTS AND IN CONJUNCTION WITH A PERMIT FOR WORK WITHIN HIGHWAY RIGHTS OF WAY (FORM TA 210). ALL CONSTRUCTION REQUIRED BY THE PERMIT AND INDICATED ON THIS SHEET SHALL BE THE RESPONSIBILITY OF THE APPLICANT AND IS SUBJECT TO THE APPROVAL OF THE VT. AGENCY OF TRANSPORTATION. WHEN USED WITH THE PLANS FOR A HIGHWAY CONSTRUCTION PROJECT. THIS SHEET IS INTENDED TO BE A GUIDE FOR THE DESIGNER CONCERNING DRIVE WIDTHS, HORIZONTAL, VERTICAL AND GEOMETRIC CHARACTERISTICS.
2. ALL COMMERCIAL DRIVES SHALL BE PAVED FROM THE EDGE OF THE TRAVELED WAY TO THE HIGHWAY RIGHT-OF-WAY, TO THE FARTHEST POINT OF CURVATURE ON THE DRIVEWAY EDGE OR AS DIRECTED BY THE DISTRICT TRANSPORTATION ADMINISTRATOR. THIS PAVING IS INDICATED IN DETAILS (B THRU E) BY HATCHING.
3. DEPTH OF SUBBASE AND PAVEMENT TO BE THE SAME AS HIGHWAY OR AS SHOWN IN DETAIL J WITHIN THE LIMITS OF THE HIGHWAY RIGHT-OF-WAY.
4. VEHICULAR ACCESS FROM PARKING AREAS TO THE RIGHT-OF-WAY AT OTHER THAN APPROVED ACCESS POINTS WILL BE PREVENTED BY THE CONSTRUCTION OF CURBING OR OTHER SUITABLE PHYSICAL BARRIER.
5. IF CURB IS PRESENT, SEE APPROPRIATE CURB DETAIL STANDARD OR MATCH TOWN/CITY STANDARD CURB TREATMENT.
6. WHERE TRAFFIC VOLUME FOR A PROJECT IS SUBSTANTIAL THE AGENCY MAY REQUIRE SPECIAL LANES FOR TURNING, SIGNALS OR OTHER MODIFICATIONS. BASED ON TRAFFIC STUDIES THE AGENCY WILL DETERMINE SPECIFIC TREATMENT TO BE USED. ON DEVELOPER PROJECTS THE AGENCY WILL WORK WITH THE APPLICANT TO IMPLEMENT CHANGES TO THE STATE HIGHWAY.
7. CIRCULAR DRAINAGE CULVERTS UNDER DRIVES SHALL HAVE A MINIMUM INSIDE DIAMETER (I.D.) OF 15". PIPE ARCHES USED UNDER DRIVES SHALL HAVE A MINIMUM INSIDE CROSS-SECTIONAL AREA EQUIVALENT TO THAT PROVIDED BY A 15" CIRCULAR PIPE.
8. THE OFFSET BETWEEN THE PROPERTY LINE AND THE EDGE OF THE DRIVEWAY MAY BE GOVERNED BY LOCAL ZONING LAWS. DRIVEWAY WIDTH RESTRICTIONS SHOWN PERTAIN ONLY TO THE AREA WITHIN THE HIGHWAY R.O.W. OR THE END OF THE TURNING RADIUS WHICHEVER IS GREATEST.
9. DRIVEWAY GRADES STEEPER THAN THOSE SHOWN MAY BE ALLOWED AS LONG AS A 20' APPROACH AREA IS ACHIEVED FOR THE VEHICLE TO PAUSE BEFORE ENTERING THE HIGHWAY. (WHERE CURB & SIDEWALKS EXIST, SEE STANDARDS C-2A & C-2B)
10. INTERSECTION SIGHT DISTANCES, EQUAL TO OR GREATER THAN THOSE SHOWN BELOW, SHOULD BE PROVIDED IN BOTH DIRECTIONS FOR ALL DRIVES ENTERING ON PUBLIC HIGHWAYS, UNLESS OTHERWISE APPROVED BY THE AGENCY OF TRANSPORTATION. INTERSECTION SIGHT DISTANCE IS MEASURED FROM A POINT ON THE DRIVE AT LEAST 15 FEET FROM THE EDGE OF TRAVELED WAY OF THE ADJACENT ROADWAY AND MEASURED FROM A HEIGHT OF EYE OF 3.5 FEET ON THE DRIVE TO A HEIGHT OF 3.50 FEET ON THE ROADWAY.

SIGHT DISTANCE CHART

POSTED SPEED OR DESIGN SPEED (M.P.H.)	MINIMUM STOPPING SIGHT DISTANCE (FT)	MINIMUM INTERSECTION SIGHT DISTANCE • (FT)
25	155	280
30	200	335
35	250	390
40	305	445
45	360	500
50	425	555
55	495	610
60	570	665
65	645	720

THE ABOVE VALUES ARE TAKEN FROM THE 2004 AASHTO " A POLICY ON GEOMETRIC DESIGN OF HIGHWAYS & STREETS."

NOTE : ADVANCE WARNING SIGNS WILL BE REQUIRED IF OBTAINABLE INTERSECTION SIGHT DISTANCES ARE BELOW MINIMUM STOPPING SIGHT DISTANCES.

THE CHART IS ENTERED TO SELECT DESIGN VALUES BASED ON THE POSTED SPEED LIMIT IN MPH. VALUES FOR DESIGN ARE CALCULATED BASED ON THE DESIGN SPEED IN MPH.

• ASSUMES A GAP OF 7.5 SECONDS IN THE TRAFFIC STREAM ON THE HIGHWAY MAINLINE BASED ON THE HIGHWAY DESIGN SPEED IN MPH. THIS ALLOWS A STOPPED PASSENGER VEHICLE TO ENTER THE MAINLINE FROM THE DRIVE WITHOUT UNDULY INTERFERING WITH THE HIGHWAY OPERATIONS.

REVISIONS AND CORRECTIONS

DEC. 11, 1992 - THIS STANDARD SUPERCEDES B-71 (7/23/80R), B-71A (3/12/90), AND B-13 (12/14/71).
JUNE 1, 1994 - REISSUED, WITHOUT CHANGE, UNDER NEW SIGNATURES.
MAR. 10, 1995 - REISSUED, WITHOUT CHANGE, UNDER NEW SIGNATURES.
NOV. 16, 2000 - CHANGES MADE TO CONFORM WITH LANGUAGE AND DIMENSIONS IN ACCESS MANAGEMENT PROGRAM GUIDELINES.
FEB 1, 2004 - CHANGES MADE TO SIGHT DISTANCE CHART TO CONFORM WITH NEWEST AASHTO CRITERIA.
JULY 8, 2005 - CHANGE MADE TO OBJECT HEIGHT TO CONFORM WITH NEWEST AASHTO CRITERIA

APPROVED

DIRECTOR OF PROGRAM DEVELOPMENT

CHIEF OF UTILITIES AND PERMITS

FEDERAL HIGHWAY ADMINISTRATION

STANDARDS FOR RESIDENTIAL AND COMMERCIAL DRIVES

VERMONT AGENCY OF TRANSPORTATION

STANDARD B-71

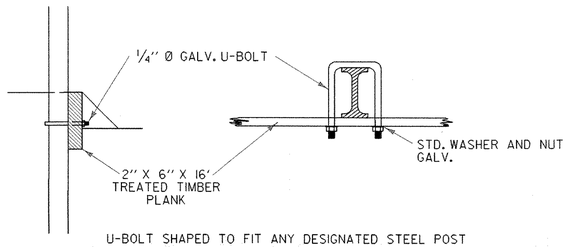

U-BOLT SHAPED TO FIT ANY DESIGNATED STEEL POST

WITH STEEL POSTS

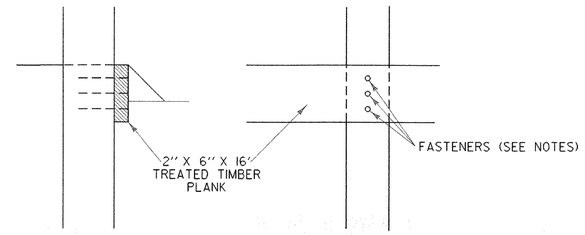

WITH WOOD POSTS (EXISTING CONDITION)

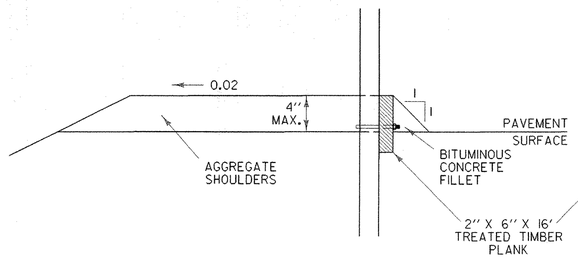

BITUMINOUS CONCRETE FILLET DETAIL

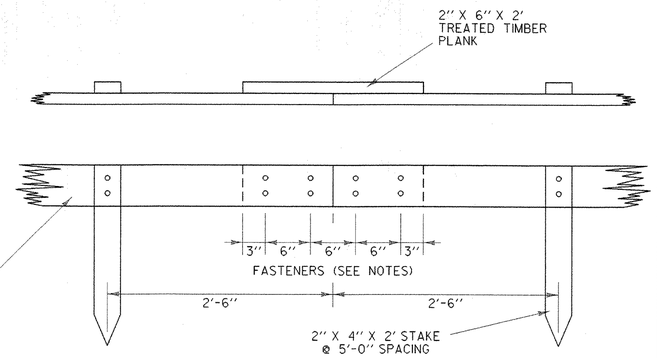

SPLICE DETAIL

TREATED TIMBER CURB

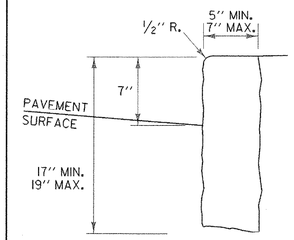

VERTICAL GRANITE CURB

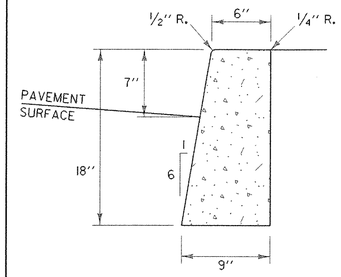

CAST IN PLACE CONCRETE CURB, TYPE B

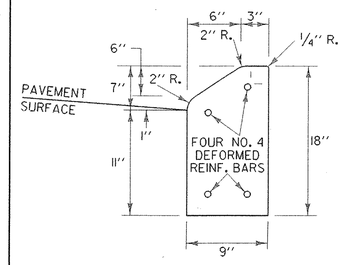

PRECAST REINFORCED CONCRETE CURB, TYPE A

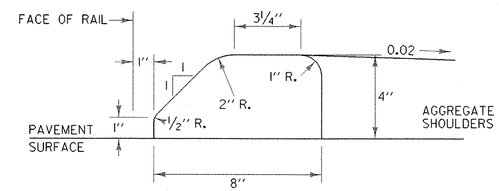

USE ONLY WITH STEEL BEAM GUARDRAIL

BITUMINOUS CONCRETE CURB, TYPE A

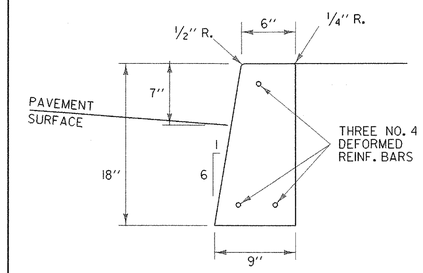

PRECAST REINFORCED CONCRETE CURB, TYPE B

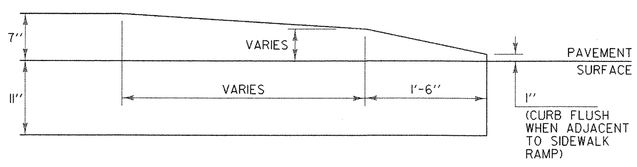

CONCRETE CURB END

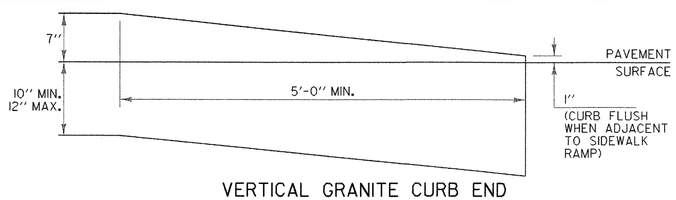

VERTICAL GRANITE CURB END

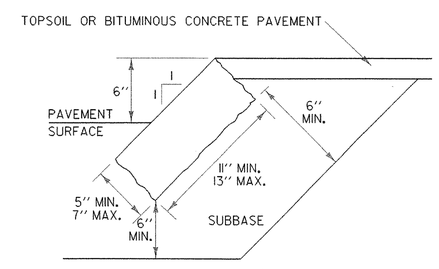

EDGING TO BE PLACED PRIOR TO PLACING TOP SURFACE COURSE.

GRANITE SLOPE EDGING

GENERAL NOTES:

1. HEIGHT OF REVEAL OF CURB SHALL NOT EXCEED FOUR INCHES WHERE DESIGN OR POSTED SPEED IS EQUAL TO OR GREATER THAN 40 MPH AND WHEN INSTALLED WITH GUARDRAIL (STANDARD SHAPE TO BE BURIED TO THIS DEPTH).
2. WHEN CONCRETE SIDEWALK IS CONSTRUCTED ADJACENT TO CONCRETE OR VERTICAL GRANITE CURB, ASPHALT TREATED FELT SHALL BE PLACED BETWEEN THE SIDEWALK AND CURB FOR THE TOTAL DEPTH OF THE SIDEWALK.
3. FASTENERS (20d NAILS OR SCREWS) SHALL BE CORROSION RESISTANT TO THE TREATED LUMBER.
4. FOR SPECIFICATIONS FOR EXPANSION/CONTRACTION JOINTS AND LENGTHS OF SECTIONS, SEE SECTION 616.
5. JOINTS BETWEEN CURB SECTIONS SHALL BE MORTARED IN CONFORMANCE WITH SECTION 616.
6. BITUMINOUS CONCRETE AND TREATED TIMBER CURB SHALL BE IN CONFORMANCE WITH SECTION 616.
7. TWO INCH MINIMUM CLEARANCE FROM FACE OF CONCRETE TO EDGE OF REINFORCING STEEL.

OTHER STDS. REQUIRED: **NONE**

REVISIONS AND CORRECTIONS

FEB. 11, 2008 - ORIGINAL APPROVAL DATE

APPROVED

Kevin S. Marshia
ROADWAY, TRAFFIC & SAFETY ENGINEER

Richard Theriault
DIRECTOR OF PROGRAM DEVELOPMENT

Mark D. Richter
FEDERAL HIGHWAY ADMINISTRATION

CURBING

VERMONT AGENCY OF TRANSPORTATION

STANDARD

C-10

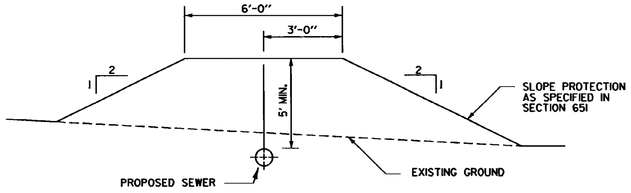

TYPICAL FILL SECTION OVER SEWER PIPE

FOR PIPES WITH LESS THAN 5' OF COVER

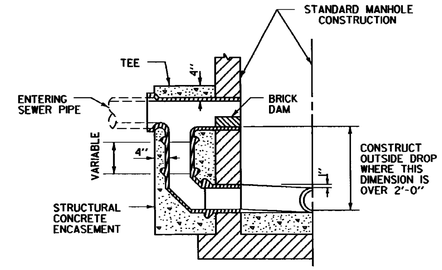

OUTSIDE MANHOLE DROP DETAIL

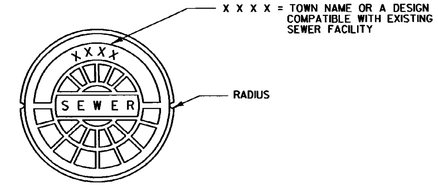

COVER PLAN

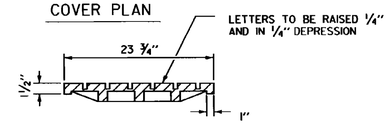

COVER SECTION

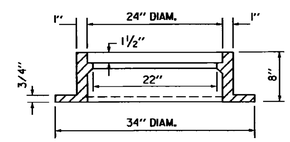

FRAME SECTION

MANHOLE FRAME AND COVER DETAIL

NOTES :

TRENCH EXCAVATION AND BACKFILLING OF SEWER PIPE SHALL BE AS SPECIFIED UNDER SECTION 628.

NO ADDITIONAL PAYMENT SHALL BE MADE FOR ABANDONING AND PLUGGING EXISTING PIPES WHEN DIRECTED BY THE ENGINEER.

CONCRETE ENCASEMENT OF SEWER LINES WILL BE REQUIRED WHERE THEY CROSS STORM DRAINS, WATER PIPES, OR OTHER STRUCTURES IN SUCH A MANNER AS TO IMPOSE UNUSUAL LOADING ON THE SEWER PIPE.

EMBANKMENTS SHALL BE COMPLETED AND COMPACTED TO AN ELEVATION AT LEAST 12 INCHES ABOVE THE TOP OF THE SEWER PIPE PRIOR TO EXCAVATING A TRENCH IN WHICH TO INSTALL THE PIPE

CHIMNEY DETAIL FOR HOUSE SEWER CONNECTION SHALL BE USED ONLY AS SHOWN ON THE PLANS OR WHEN DIRECTED BY THE ENGINEER.

HOUSE CONNECTIONS TO BE TEE, WYE OR SADDLE AS APPROVED BY THE ENGINEER, AND COMPATIBLE WITH EXISTING FACILITIES.

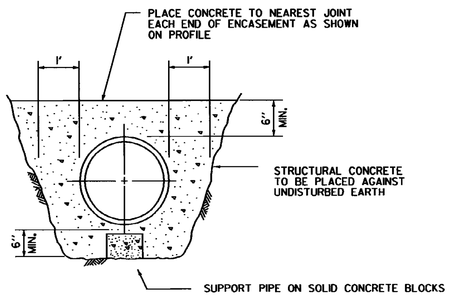

NOTE : PIPE SHALL BE SECURELY BRACED VERTICALLY AND HORIZONTALLY TO PREVENT FLOTATION DURING CONCRETE PLACEMENT.

TYPICAL CONCRETE ENCASEMENT

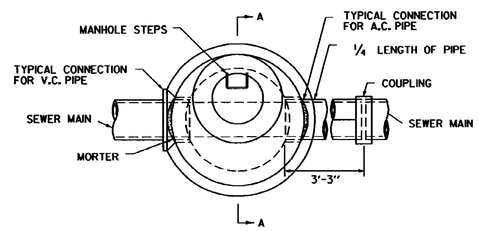

PLAN

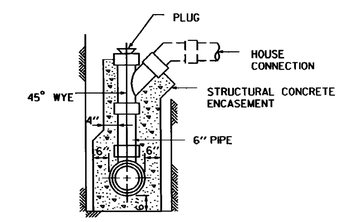

SECTION

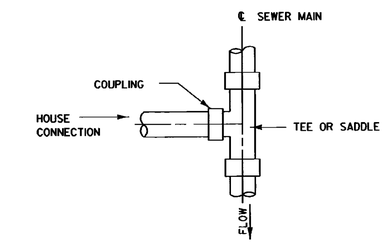

PLAN

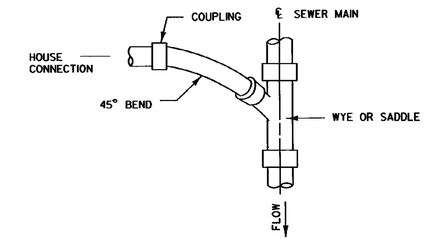

PLAN

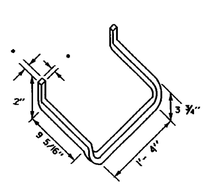

ALUMINUM STEP (DROP FRONT)

* - INDIVIDUAL METAL RUNGS SHALL HAVE A MINIMUM DIMENSION OF 1" OR SHALL BE PAINTED OR OTHERWISE TREATED TO RESIST CORROSION AND RUSTING.

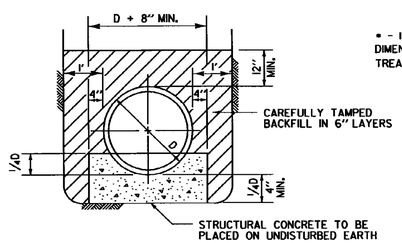

TYPICAL CONCRETE CRADLE

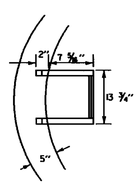

STEP DETAIL

TOP VIEW

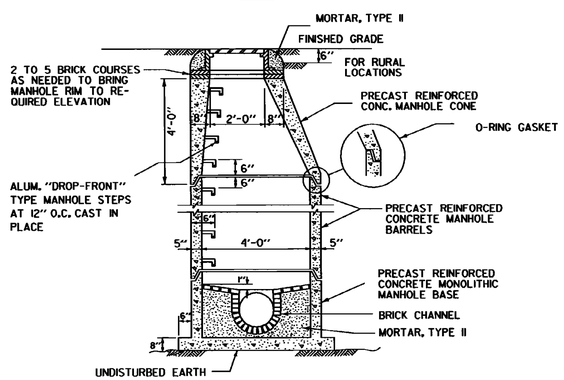

SECTION A-A

PRECAST REINFORCED CONCRETE SANITARY SEWER MANHOLE

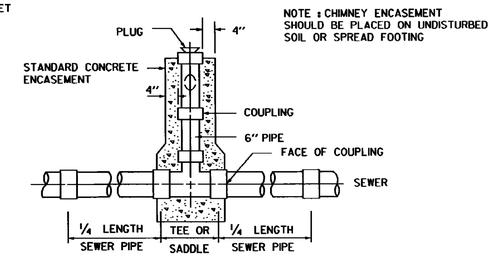

ELEVATION

CHIMNEY DETAILS FOR HOUSE SEWER CONNECTION

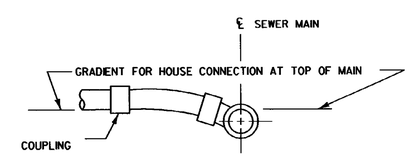

ELEVATION

TYPICAL SEWER CONNECTION

REVISIONS AND CORRECTIONS

OCT. 1, 1976 - ORIGINAL APPROVAL
MAR. 23, 1994 - ADDED STEP DETAILS
JUNE 1, 1994 - REISSUED, WITHOUT CHANGE, UNDER NEW SIGNATURES.
MAR. 10, 1995 - REISSUED, WITHOUT CHANGE, UNDER NEW SIGNATURES.

APPROVED

APPROVED FOR THIS PROJECT AND/OR DESIGN IMPLEMENTATION. FHWA FINAL APPROVAL PENDING.

Gordon R. MacArthur
DIRECTOR OF ENGINEERING

Thomas Bragg
UTILITIES ENGINEER

SANITARY SEWER SYSTEMS

VERMONT AGENCY OF TRANSPORTATION

STANDARD

D-22

"W" BEAM GUARDRAIL WITH STEEL POSTS

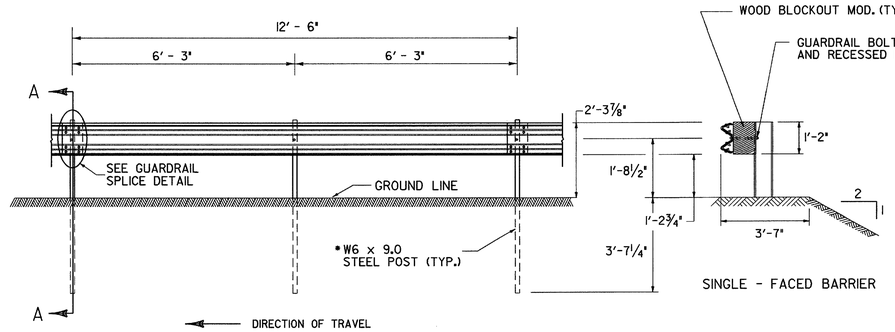

ELEVATION FROM ℄ OF ROAD

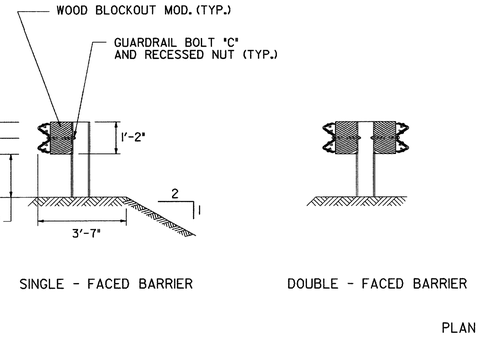

SECTION A -A

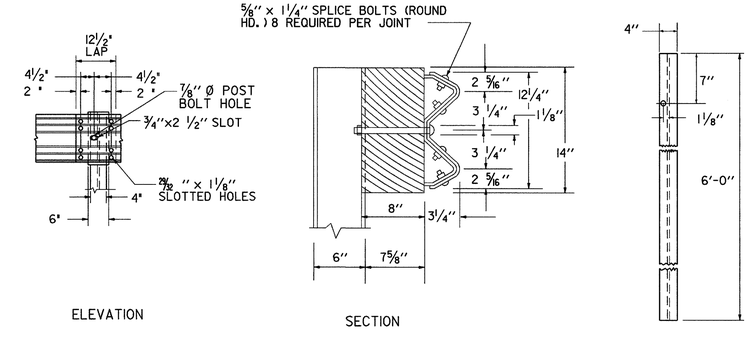

GUARDRAIL SPLICE DETAIL

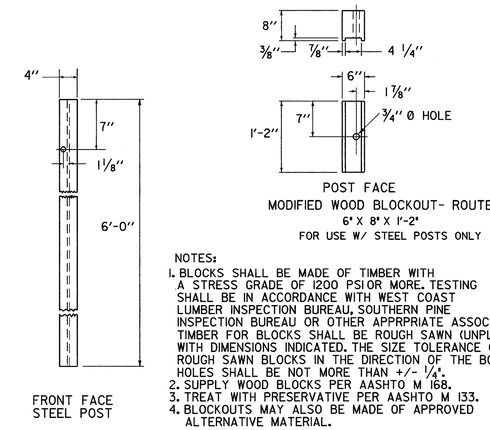

NOTES:
1. BLOCKS SHALL BE MADE OF TIMBER WITH A STRESS GRADE OF 1200 PSIOR MORE. TESTING SHALL BE IN ACCORDANCE WITH WEST COAST LUMBER INSPECTION BUREAU, SOUTHERN PINE INSPECTION BUREAU OR OTHER APPRPRIATE ASSOCIATION. TIMBER FOR BLOCKS SHALL BE ROUGH SAWN (UNPLANED) WITH DIMENSIONS INDICATED. THE SIZE TOLERANCE OF ROUGH SAWN BLOCKS IN THE DIRECTION OF THE BOLT HOLES SHALL BE NOT MORE THAN +/- ¼".
2. SUPPLY WOOD BLOCKS PER AASHTO M 168.
3. TREAT WITH PRESERVATIVE PER AASHTO M 133.
4. BLOCKOUTS MAY ALSO BE MADE OF APPROVED ALTERNATIVE MATERIAL.

"W" BEAM GUARDRAIL WITH WOOD POSTS

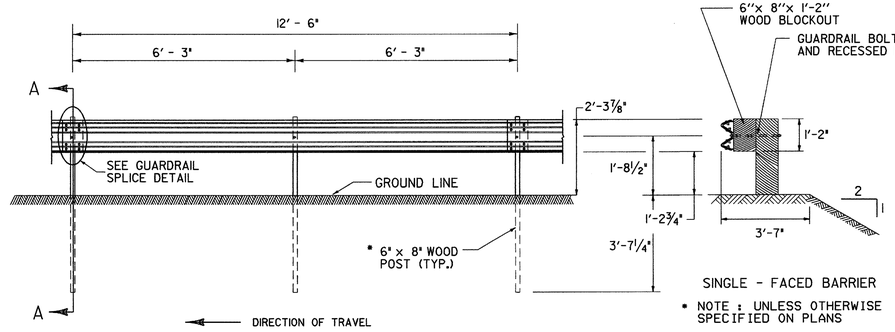

ELEVATION FROM ℄ OF ROAD

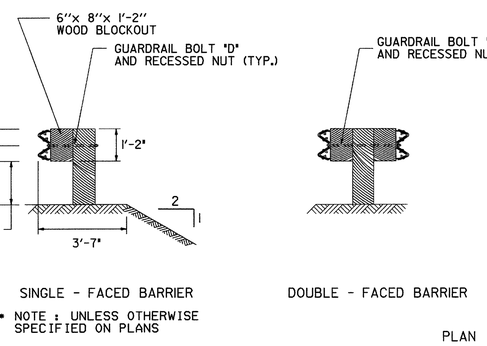

* NOTE : UNLESS OTHERWISE SPECIFIED ON PLANS

SECTION A -A

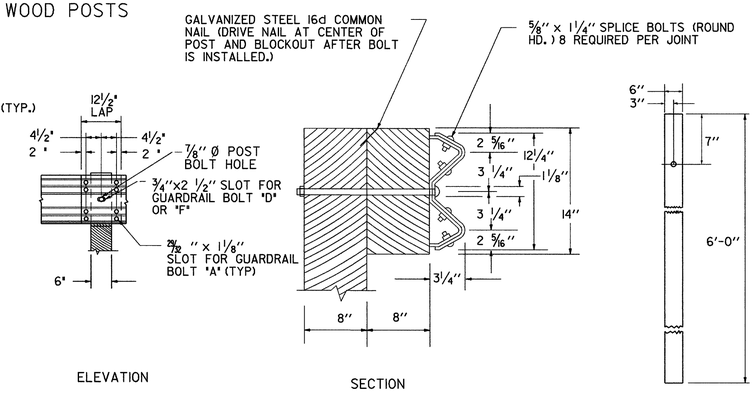

GUARDRAIL SPLICE DETAIL

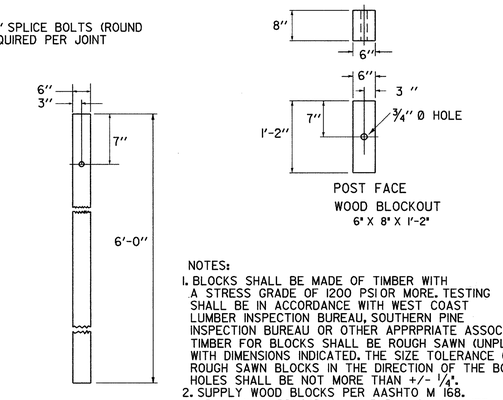

NOTES:
1. BLOCKS SHALL BE MADE OF TIMBER WITH A STRESS GRADE OF 1200 PSIOR MORE. TESTING SHALL BE IN ACCORDANCE WITH WEST COAST LUMBER INSPECTION BUREAU, SOUTHERN PINE INSPECTION BUREAU OR OTHER APPRPRIATE ASSOCIATION. TIMBER FOR BLOCKS SHALL BE ROUGH SAWN (UNPLANED) WITH DIMENSIONS INDICATED. THE SIZE TOLERANCE OF ROUGH SAWN BLOCKS IN THE DIRECTION OF THE BOLT HOLES SHALL BE NOT MORE THAN +/- ¼".
2. SUPPLY WOOD BLOCKS PER AASHTO M 168.
3. TREAT WITH PRESERVATIVE PER AASHTO M 133.
4. BLOCKOUTS MAY ALSO BE MADE OF APPROVED ALTERNATIVE MATERIAL.

GUARDRAIL DELINEATOR

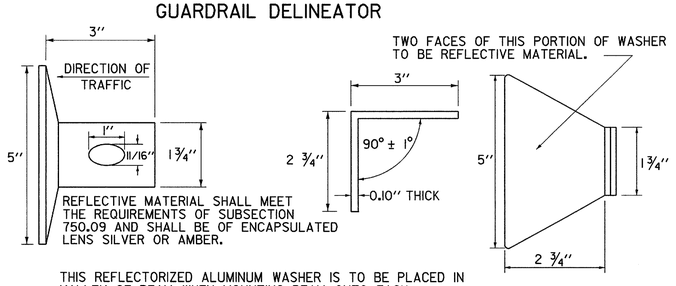

THIS REFLECTORIZED ALUMINUM WASHER IS TO BE PLACED IN VALLEY OF BEAM WHEN MOUNTING BEAM ONTO EACH FIFTH POST. WASHER SHALL MEET SPECIFICATION REQUIREMENTS FOR A.S.T.M. B-209 ALLOY 5052-H32

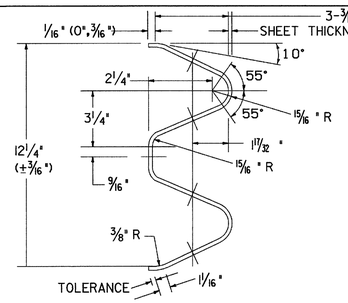

ARTBA RE-3[2@6'-3"=12'-6" CLASS A, TYPE 1]-73

TYPICAL GUARDRAIL SECTION

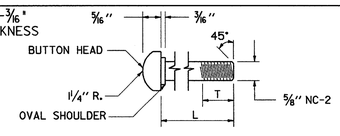

GUARDRAIL BOLTS				FASTENER USED IN	
BOLT DES.	ARTBA REF. NO.	L	T (MIN.)	STEEL POSTS	WOOD POSTS
"A"	F-3[1¼]-76	1¼"	1"	X	X
"C"	F-3[9½]-76	9½"	1¾"	X	
"D"	F-3[18]-76	18"	2½"		X
"F"	F-3[25]-76	25"	2"		X

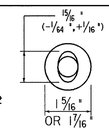

GUARDRAIL BOLT

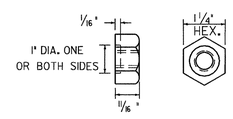

RECESSED NUT FOR GUARDRAIL BOLT

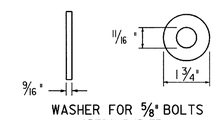

WASHER FOR ⅝" BOLTS
ARTBA F-13-73
NOTE: WASHER IS USED UNDER RECESSED NUT WHERE GUARDRAIL BOLT IS USED WITH WOOD POSTS.

GENERAL NOTES:

1. GUARDRAIL SHALL MEET THE REQUIREMENTS OF AASHTO M 180, CLASS A, TYPE 1, UNLESS OTHERWISE DESIGNATED
2. GUARDRAIL SHALL BE SINGLE FACED UNLESS OTHERWISE DESIGNATED
3. GUARDRAIL SECTIONS SHALL BE LAPPED IN THE DIRECTION OF TRAFFIC FLOW FOR THE LANE NEAREST THE GUARDRAIL.
4. FOR DESCRIPTION AND SPECIFICATION OF PARTS IDENTIFIED BY (ARTBA ...) AND OTHER DETAILS OF POSTS, POST ACCESSORIES, FASTENERS & RAIL ELEMENTS, SEE AASHTO-AGC-ARTBA JOINT TASK FORCE NO. 13, TITLED "A GUIDE TO STANDARDIZED HIGHWAY BARRIER HARDWARE", LATEST EDITION.
5. STANDARD STEEL BEAM TO BE 1/8" AND THE HEAVY DUTY TO BE 3/64" THICK.

OTHER STANDARD REQUIRED G-1d

REVISIONS AND CORRECTIONS
JUNE 1, 1994 - REISSUED, WITHOUT CHANGE, UNDER NEW SIGNATURES.
JAN.3,2000 - UPDATED TO REFLECT METRIC STD. CHANGES

APPROVED

DIRECTOR OF PROJECT DEVELOPMENT

ROADWAY AND TRAFFIC DESIGN ENGINEER

STEEL BEAM GUARDRAIL WITH STEEL POSTS
STEEL BEAM GUARDRAIL WITH WOOD POSTS

VERMONT AGENCY OF TRANSPORTATION

STANDARD
G-1

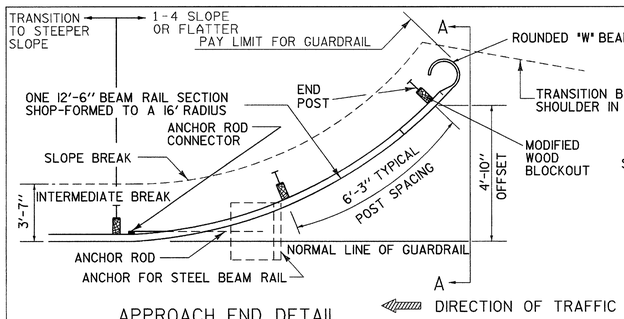

APPROACH END DETAIL

NHS APPROVED FOR USE WHERE DESIGN SPEED IS 40 OR LESS MPH

NON-NHS APPROVED FOR USE WHERE DESIGN SPEED IS 50 OR LESS MPH

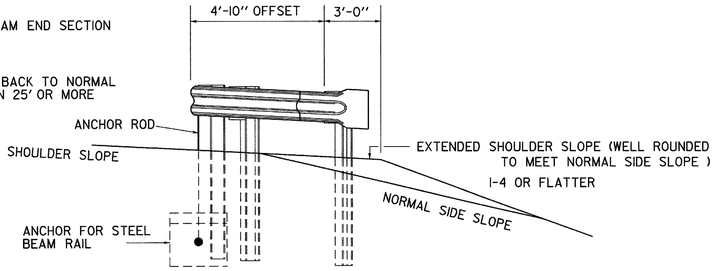

SECTION A-A

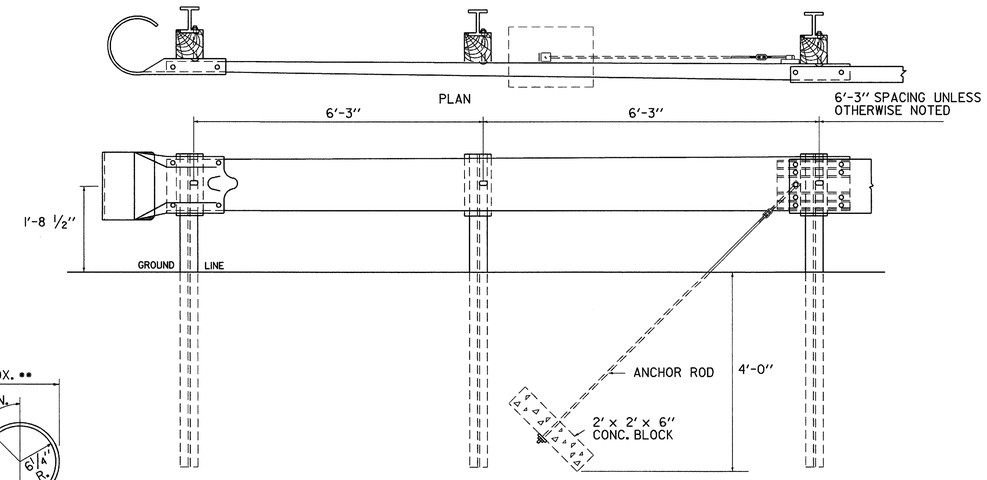

ASSEMBLY ELEVATION

TRAILING END TERMINAL FOR USE ON ONE-WAY HIGHWAYS

GENERAL NOTES:

1. ALL METAL PARTS SHALL BE GALVANIZED.
2. ALL WOOD POSTS SHALL BE GIVEN A PRESERVATIVE TREATMENT.
3. DETAILS PERTINENT TO THE STANDARD INSTALLATION OF "W" BEAM SECTIONS WILL BE FOUND ON STANDARD DRAWING G-1.
4. FOR DESCRIPTION AND SPECIFICATIONS OF PARTS IDENTIFIED BY "(ARTBA...)" AND OTHER DETAILS OF POSTS, POST ACCESSORIES, FASTENERS AND RAIL ELEMENTS, SEE AASHTO-AGC-ARTBA JOINT TASK FORCE NO. 13, TITLED "A GUIDE TO STANDARDIZED HIGHWAY BARRIER HARDWARE", LATEST EDITION.

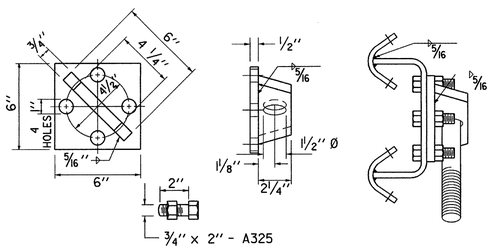

ANCHOR ROD CONNECTOR

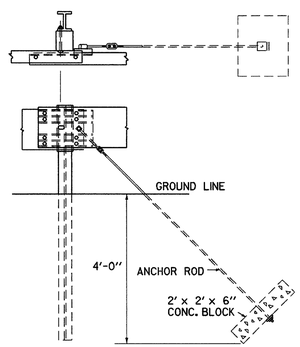

ANCHOR ROD

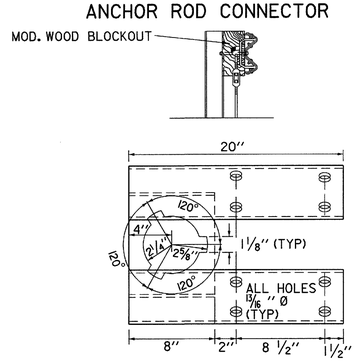

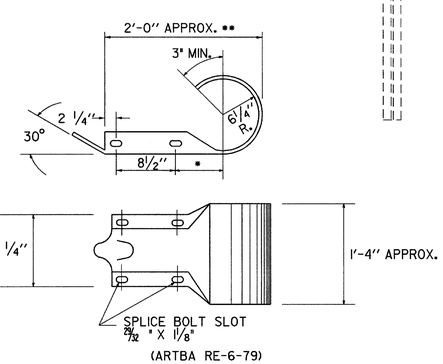

(ARTBA RE-6-79)

ROUNDED "W" BEAM END SECTION

* THIS DIMENSION IS 7 1/2" INRE-7-79. IF THE DIMENSION IS USED IN THIS PART, IT WILL GIVE AN ACCEPTABLE OVERALL LENGTH (**) OF APPROXIMATELY 2'- 11/2."

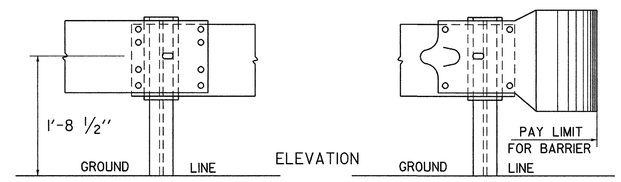

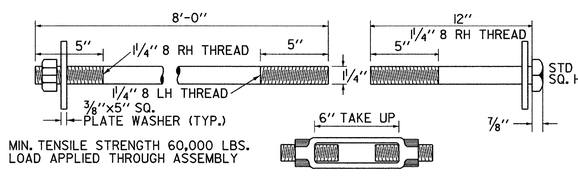

MIN. TENSILE STRENGTH 60,000 LBS.
LOAD APPLIED THROUGH ASSEMBLY

TURNBUCKLE

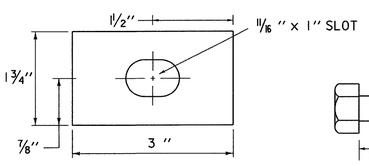

RECTANGULAR GUARDRAIL PLATE WASHER

(ARTBA F-12-73)

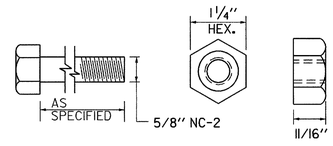

5/8" HEX NUT AND BOLT "F"

(ARTBA F-8-76)

FASTENER DETAILS

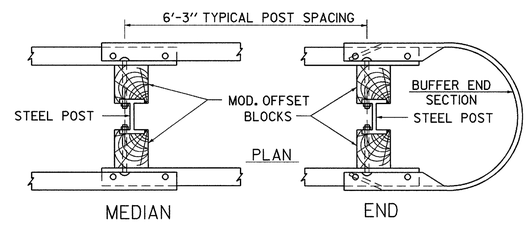

STEEL BEAM MEDIAN BARRIER

NOTE: TO BE USED OUTSIDE CLEAR ZONE ONLY.

OTHER STANDARD REQUIRED G-1

REVISIONS AND CORRECTIONS
JUNE 1, 1994 - REISSUED, WITHOUT CHANGE, UNDER NEW SIGNATURES.
JAN.3,2000 - UPDATED TO REFLECT METRIC STD. CHANGES

APPROVED

DIRECTOR OF PROJECT DEVELOPMENT

ROADWAY AND TRAFFIC DESIGN ENGINEER

STEEL BEAM GUARDRAIL APPROACH END TERMINAL
STEEL BEAM GUARDRAIL TRAILING END TERMINAL
ANCHOR FOR STEEL BEAM GUARDRAIL
STEEL BEAM MEDIAN BARRIER

VERMONT AGENCY OF TRANSPORTATION

STANDARD

G-1d