REVIEW NOTES

ROCHESTER ER STP 0162(19) – BRIDGE NO. 13

ARCH DRAWINGS

May 30, 2014

RE: Arch Drawings received from Schultz Construction on 5/22/2014.

VHB Project No.: 57518.00

These notes accompany the review of the Precast Arch Calculations reviewed by VHB on 5/30/2014.

Vermont Agency of Transportation
RECEIVED
ON: May 21, 2014
and Checked for
CONFORMANCE
BY: Jennifer Fitch DATE: 05/30/2014

General Notes

1. See the following sheets for comments

SUBMITTAL REVIEW

☒ Reviewed and approved but only for conformance to the Construction Contract Documents.

☐ Revise and Resubmit

Corrections or comments made during this review do not relieve the Contractor or his Designer from compliance with professional requirements or for responsibility for the adequacy of the submittal information. This check is only for review of general conformance with industry standards and general compliance with the information given in the Contract Documents. VHB has not conducted a detailed review of the submittal and has not performed calculations or assessed the adequacy of loads, design criteria, quantities, dimensions, etc. Approval of the submittal does not constitute VHB's approval of any construction means, methods or techniques. These remain the responsibility of the Contractor.

Vanasse Hangen Brustlin, Inc.
7056 US Route 7 • Post Office Box 120
North Ferrisburgh, VT 05473
802.425.7788

Job Number: 57518.00
Reviewed By: E.A. Fiala
Date: May 30, 2014

This submittal is for sheets 1-229, inclusive, of the "BR 13 Arch Resubmit" submittal received on 5/22/2014.

Project Number: 2014.059.004

DESIGN COMPUTATIONS FOR

VT Route 73 Bridge No. 13
28' x 10' Archcon with Anchor Wingwalls
Rochester VT

PREPARED FOR:

Michie Corporation
PO Box 870
Henniker, New Hampshire 03242

STATE OF VERMONT
JOSEPH J. MIECZKOWSKI
No. 8997
Structural I
LICENSED
PROFESSIONAL ENGINEER

Joseph J. Mieczkowski
5-20-14

PREPARED BY:

DELTA
ENGINEERS, ARCHITECTS, & LAND SURVEYORS
860 Hooper Road, Endwell, New York 13760
TEL: 607-231-6600 FAX: 607-231-6650
EMAIL: precast@deltaengineers.com
www.deltaengineers.com

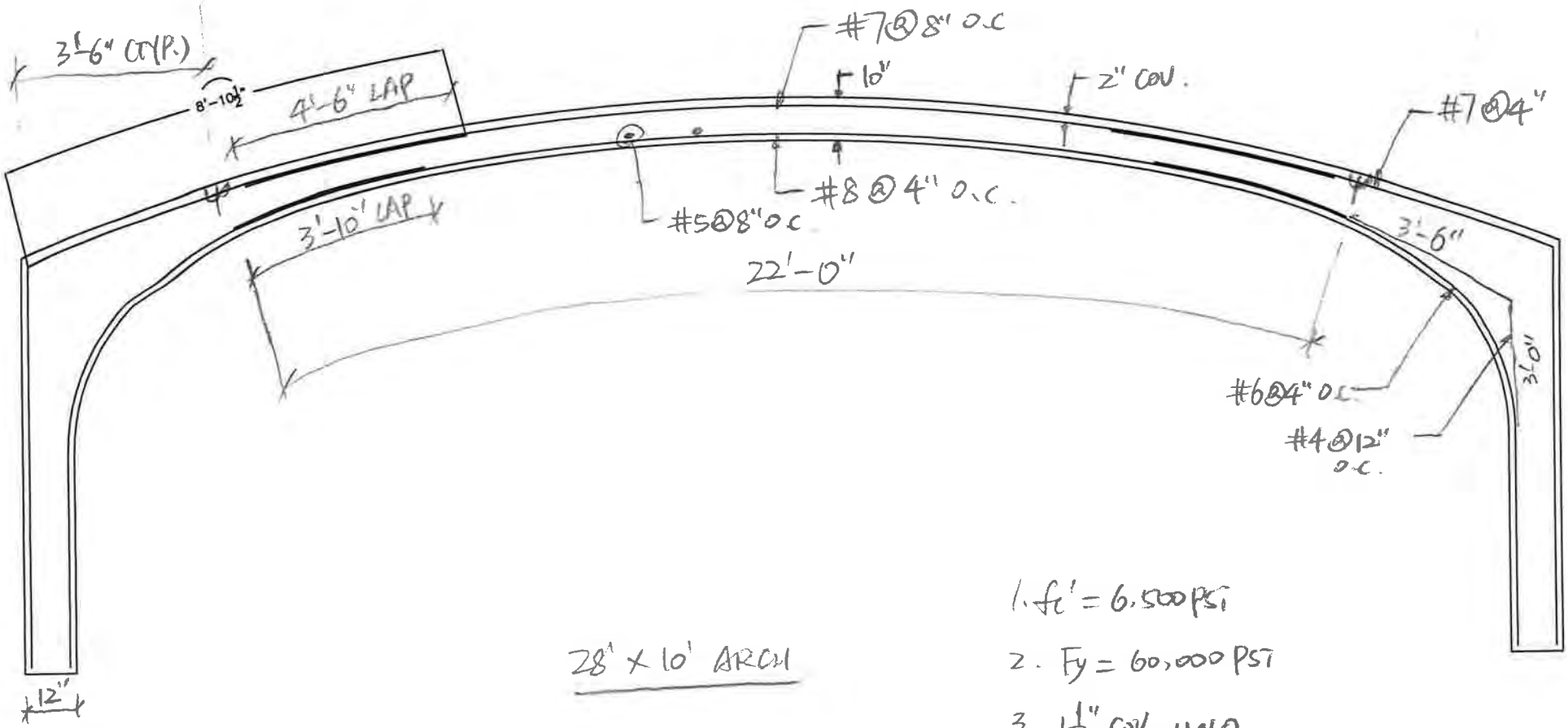

28' X 10' ARCH

1. $f_c' = 6{,}500$ PSI
2. $F_y = 60{,}000$ PSI
3. $1\frac{1}{2}$" COV. UNO
4. PROVIDE #4 @ 12" O.C. LONGITUDINAL REINFORCING UNO.

DELTA
ENGINEERS, ARCHITECTS, & LAND SURVEYORS
860 Hooper Road, Endwell, NY 13760
www.deltaengineers.com
Phone: (607) 231-6600
Fax: (607) 231-6650

JOB	2014.059.004		3
DESCRIPTION	28x10 ARCH		
SHEET NO.	OF	SCALE	
CALCULATED BY	YL	DATE	3/12/2014
CHECKED BY	SLW	DATE	3/20/14

AN ISO 9001:2008 CERTIFIED COMPANY

28' x 10' ARCH DESIGN

FILL HT. 0' - 2'. USE LIVE LOAD FOR 0' FILL W/ 2' FILL HT FOR DESIGN.

ASSUME CONSTRUCTION VEHICLE NOT GREATER THAN HL-93.

$\eta = 1.05$ FOR NON-LIVE LOAD.

LOAD FACTORS FOR CANDE INPUT:

LOAD STEP 1 - DC . $1.25 \times 1.05 = 1.31$

LOAD STEP 2-4 - EH : $0.9 / 1.05 = 0.857$

LOAD STEP 5-8 - EV : $1.3 \times 1.05 = 1.365$

LOAD STEP 9-12 - LL : 1.75

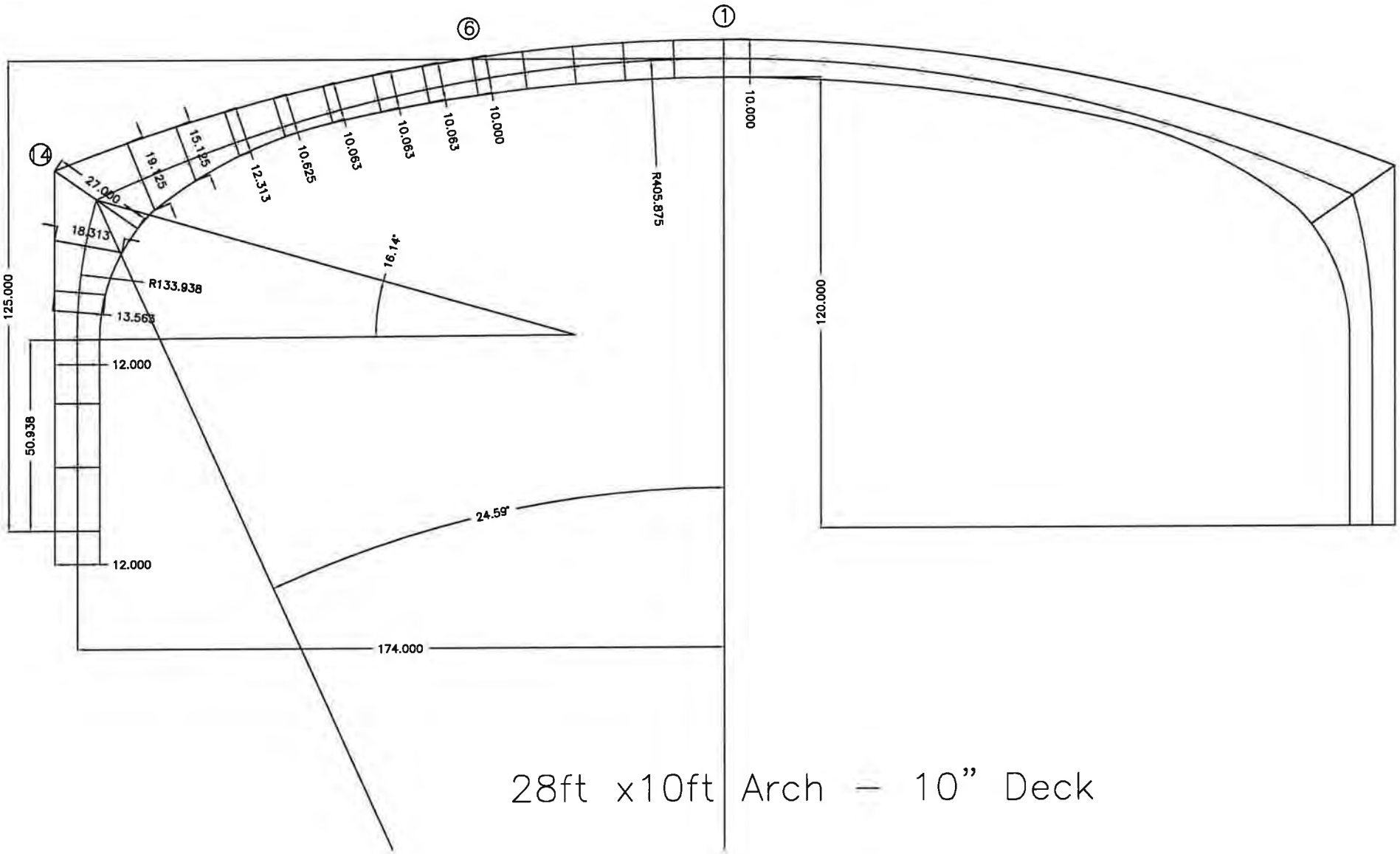

28ft x10ft Arch – 10" Deck

DELTA
ENGINEERS, ARCHITECTS, & LAND SURVEYORS
860 Hooper Road, Endwell, NY 13760
www.deltaengineers.com
Phone: (607) 231-6600
Fax: (607) 231-6650

JOB	2014.059.004		
DESCIPTION	28'x10' Arch		
SHEET NO.	OF	SCALE	
CALCULATED BY	YL	DATE	3/13/2014
CHECKED BY	SLJ	DATE	3/20/14

Beam Information

Point from Crown	Thickness(in)	Beam Thickness(in)	Beam No.	Reinforcing Area (in^2/ft)		Reinforcing Area (in^2/in)	
				inside	outside	inside	outside
1	10			2.37	0.9	0.198	0.075
2	10	10	19	2.37	0.9	0.198	0.075
3	10	10	18	2.37	0.9	0.198	0.075
4	10	10	17	2.37	0.9	0.198	0.075
5	10	10	16	2.37	0.9	0.198	0.075
6	10	10	15	2.37	0.9	0.198	0.075
7	10.063	10.03	14	2.37	0.9	0.198	0.075
8	10.063	10.06	13	2.37	0.9	0.198	0.075
9	10.063	10.06	12	1.32	1.8	0.110	0.150
10	10.625	10.34	11	1.32	1.8	0.110	0.150
11	12.313	11.47	10	1.32	1.8	0.110	0.150
12	15.125	13.72	9	1.32	1.8	0.110	0.150
13	19.125	17.13	8	1.32	1.8	0.110	0.150
14	27	23.06	7	1.32	1.8	0.110	0.150
15	18.313	22.66	6	1.32	1.8	0.110	0.150
16	13.563	15.94	5	1.32	1.8	0.110	0.150
17	12	12.78	4	1.32	1.8	0.110	0.150
18	12	12	3	0.6	1.8	0.050	0.150
19	12	12	2	0.6	1.8	0.050	0.150
20	12	12	1	0.6	1.8	0.050	0.150

DELTA
ENGINEERS, ARCHITECTS, & LAND SURVEYORS
860 Hooper Road, Endwell, NY 13760
www.deltaengineers.com
Phone: (607) 231-6600
Fax: (607) 231-6650

JOB	2014.059.004		
DESCIPTION	28x10 Arch		
SHEET NO	OF	SCALE	
CALCULATED BY	YL	DATE	3/17/2014
CHECKED BY	SLJ	DATE	3/20/14

live load for <2' earth cover

span	28 ft	MPF	1.2
earth cover over structure	0 ft.	impact = 33*(1-0.125*earth cover) =	33 %
section width	5.96 ft	# of steps to divide load over in Cande =	4
		Skew Angle = 56 degrees	

axle distribution width = 96+1.44*span = 11.36 feet

adjusted axle distribution width due to skew = 5.96 feet

axle load to input into Cande = axle weight*impact*MPF/distribution width/12" per ft/# of load steps

LOAD RATING VEHICLES

HL-93
72 kips
0.64 K/L.F. LANE LOAD

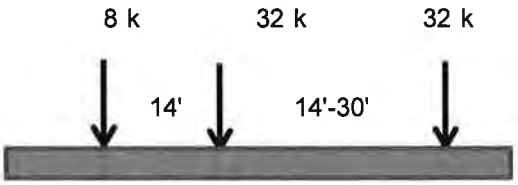

axle load to put into Cande

8 k =	44.63 lb/inch/step
32 k =	178.5 lb/inch/step

HL-93 TANDEM
50 KIPS (25 TONS)
0.64 K/L.F. LANE LOAD

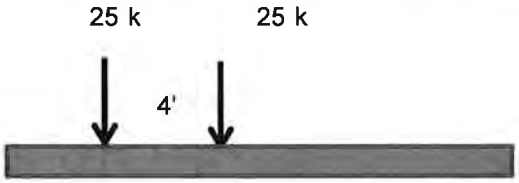

axle load to put into Cande

25 k =	139.5 lb/inch/step
25 k =	139.5 lb/inch/step

DELTA
ENGINEERS, ARCHITECTS, & LAND SURVEYORS
860 Hooper Road, Endwell, NY 13760
www.deltaengineers.com
Phone: (607) 231-6600
Fax: (607) 231-6650

JOB	2014.059.004		7
DESCIPTION	28x10 Arch		
SHEET NO	OF	SCALE	
CALCULATED BY	YL	DATE	3/17/2014
CHECKED BY	SLV	DATE	3/20/14

live load for <2' earth cover

span	28 ft	MPF	1.2
earth cover over structure	2 ft.	impact = 33*(1-0.125*earth cover) =	24.75 %
section width	5.96 ft	# of steps to divide load over in Cande =	4
		Skew Angle = 56 degrees	

axle distribution width = 96+1.44*span = 11.36 feet

adjusted axle distribution width due to skew = 5.96 feet

axle load to input into Cande = axle weight*impact*MPF/distribution width/12" per ft/# of load steps

LOAD RATING VEHICLES

HL-93
72 kips
0.64 K/L.F. LANE LOAD

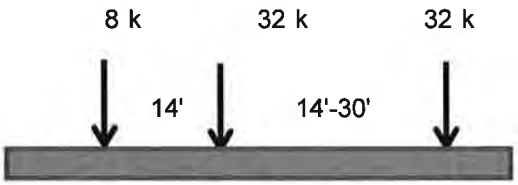

axle load to put into Cande

8 k =	41.86 lb/inch/step
32 k =	167.4 lb/inch/step

HL-93 TANDEM
50 KIPS (25 TONS)
0.64 K/L.F. LANE LOAD

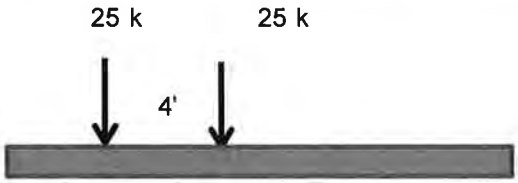

axle load to put into Cande

25 k =	130.8 lb/inch/step
25 k =	130.8 lb/inch/step

DELTA
ENGINEERS, ARCHITECTS, & LAND SURVEYORS
860 Hooper Road, Endwell, NY 13760
www.deltaengineers.com
Phone: (607) 231-6600
Fax: (607) 231-6650

JOB	2014.059.004		
DESCIPTION	28x10 Arch		
SHEET NO.	OF	SCALE	
CALCULATED BY	YL	DATE	3/17/2014
CHECKED BY	SLV	DATE	3/20/14

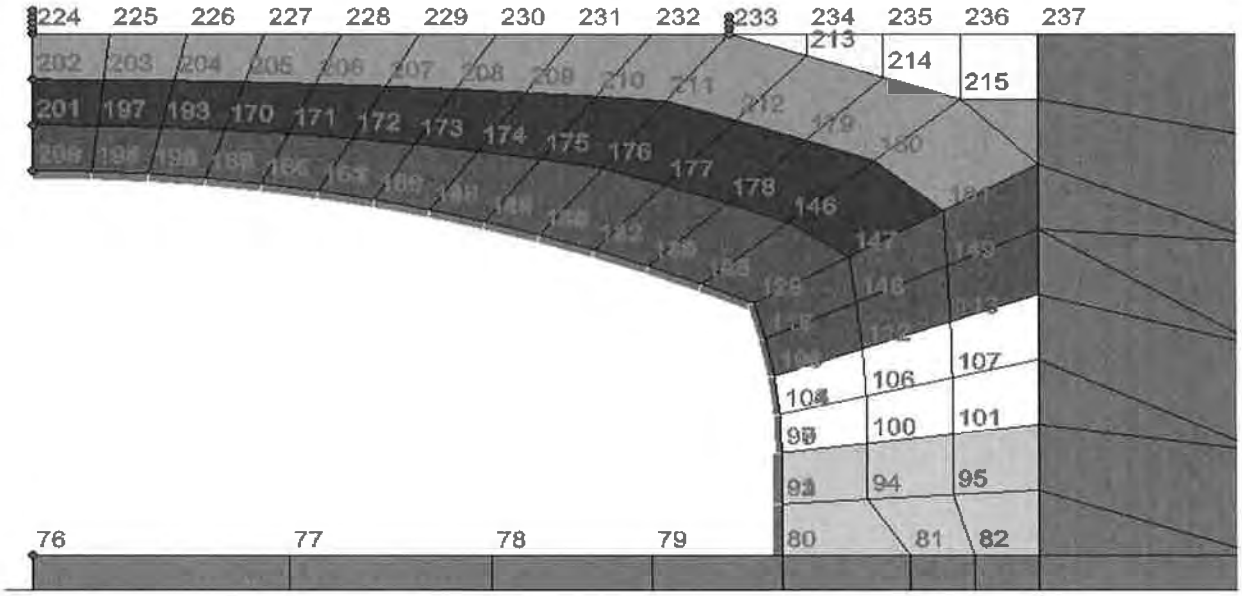

Lane load or additional dead load to input into CANDE

earth cover over structure	2 ft.	additional dead load (FWS)	0.035 ksf
span	28 ft	lane load	0.064 ksf

apply lane load as point load at top nodes

Node	coordinate	tributary width	unfactored dead load / node	unfactored lane load / node	
224	0 in.	1.5 ft.	2.188 lbs	4.8 lbs	<=== Cande doubles
225	18 in.	1.5 ft.	4.375 lbs	9.6 lbs	center load, so this is
226	36 in.	1.5 ft.	4.375 lbs	9.6 lbs	1/2 regular trib load
227	54 in.	1.5 ft.	4.375 lbs	9.6 lbs	
228	72 in.	1.5 ft.	4.375 lbs	9.6 lbs	
229	90 in.	1.5 ft.	4.375 lbs	9.6 lbs	
230	108 in.	1.5 ft.	4.375 lbs	9.6 lbs	
231	126 in.	1.5 ft.	4.375 lbs	9.6 lbs	
232	144 in.	1.5 ft.	4.375 lbs	9.6 lbs	
233	162 in.	1.5 ft.	4.375 lbs	9.6 lbs	
234	180 in.	1.5 ft.	4.375 lbs	9.6 lbs	live load from here out becomes
235	198 in.	1.5 ft.	4.375 lbs	9.6 lbs	beneficial and is neglected.
236	216 in.	1.5 ft.	4.375 lbs	9.6 lbs	dead load is applied because
237	234 in.				it is a perminant load

DELTA
ENGINEERS, ARCHITECTS, & LAND SURVEYORS
860 Hooper Road, Endwell, NY 13760
www.deltaengineers.com
Phone: (607) 231-6600
Fax: (607) 231-6650

JOB	2014.059.004		
DESCIPTION	28x10 Arch		
SHEET NO	OF	SCALE	
CALCULATED BY	YL	DATE	3/13/2014
CHECKED BY	SLV	DATE	3/20/14

application point of live load

span 28 ft

leg thickness 12 inches

case 1

axle applied to centerline

case 2

axle applied to quarter point only

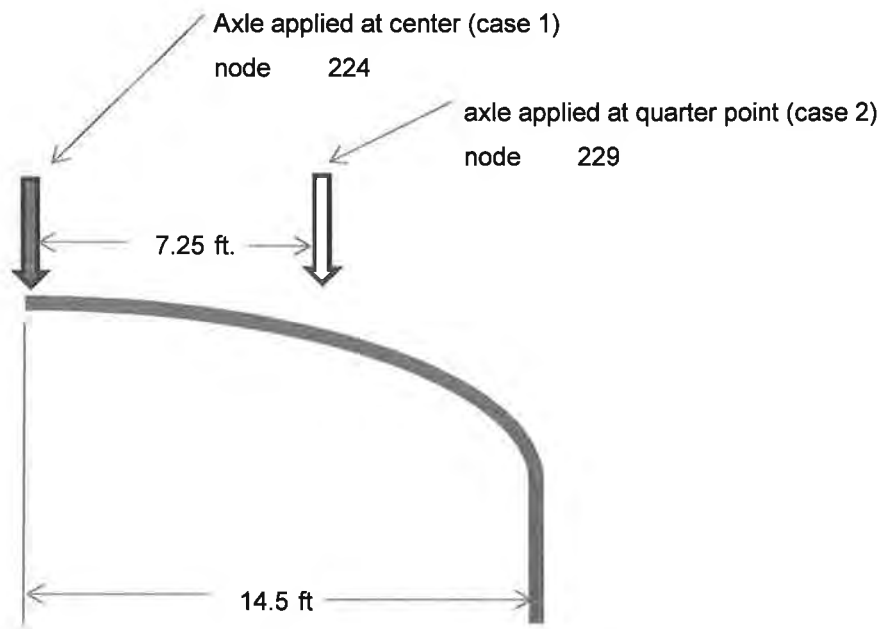

case 3

tandem applied at centerline

case 4

tandem applied at quarter point

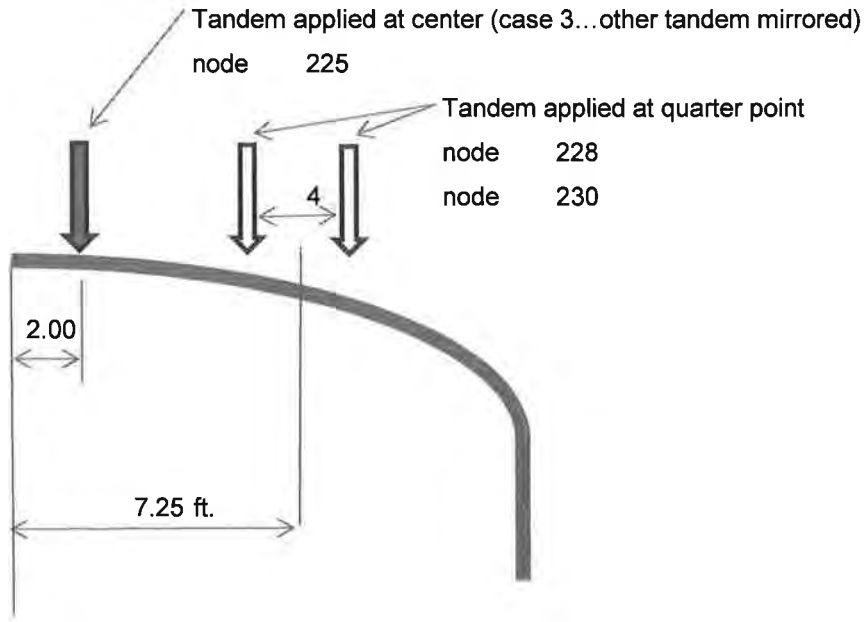

28x10c1Mod.out

```
*** WELCOME TO CANDE-2013(version 3/1/2013) ***

MASTER CONTROL AND PIPE-TYPE DATA FOR PROBLEM #  1

        USER TITLE: 28x8C1

        EXECUTION MODE ..................   ANALYS

        SOLUTION LEVEL ..................  #2 AUTO

        METHODOLOGY (LRFD OR SERVICE) ...     LRFD

        NUMBER OF PIPE-ELEMENT GROUPS ....       1

        MAXIMUM ITERATIONS PER STEP ......      30


        CULVERT PIPE-TYPE ............... CONCRETE

        CANNED MESH CODE # ..............        3

        NUMBER OF BEAM ELEMENTS .........       19

        CONCRETE MATERIAL PROPERTIES ARE AS FOLLOWS

             COMPRESSION STRENGTH (psi)..........       6500.000

             ELASTIC YOUNGS MODULUS (psi)........    4595487.000

             POISSON RATIO ......................          0.170

             CONCRETE DENSITY (pcf) .............        150.000

             INITIAL TENSILE CRACKING STRAIN.....       0.000010

             INITIAL COMPRESSION YIELD STRAIN....       0.000687

             INITIAL COMPRESSION CRUSH STRAIN ...       0.002000

             SHEAR STRENGTH MODEL (NSHEAR) # ...          1
             (VARIABLE STRENGTH MODEL PRINTED IN OUTPUT)

             CONCRETE CRACK-WIDTH MODEL NAME.....   HEGER-McGRATH
             (DRIVEN BY TENSILE STRAIN IN STEEL)

        STEEL REINFORCEMENT MATERIAL PROPERTIES

             TYPE OF STEEL CAGES (RSHAPE) .......     ARBIT

             STEEL YIELD STRENGTH (psi)..........      60000.000

             STEEL ELASTIC MODULUS (psi).........   29000000.000
```

28x10c1Mod.out

STEEL POISSON RATIO 0.300000

STEEL YIELDING STRAIN 0.001883

NONLINEAR MODELING CODE (1,2,3) 3

STEEL-BASED CRACKWIDTH PREDICTION PARAMETERS

REBAR SPACING INNER ROW (SLI), (in)	4.00
REBAR SPACING OUTER ROW (SLO), (in)	4.00
NUMBER OF STEEL LAYERS FOR INNER CAGE	1
NUMBER OF STEEL LAYERS FOR OUTER CAGE	1
HEGER-MCGRATH CODE NUMBER FOR STEEL TYPE..	3

WALL THICKNESS, REBAR AREAS AND COVER DEPTHS

WALL-THICK	INNER-REBAR	OUTER-REBAR	INNER-COVER	OUTER COVER
10.0000	0.1980	0.0750	2.0000	2.4375
10.0000	0.1980	0.0750	2.0000	2.4375
10.0000	0.1980	0.0750	2.0000	2.4375
10.0000	0.1980	0.0750	2.0000	2.4375
10.0000	0.1980	0.0750	2.0000	2.4375
10.0000	0.1980	0.0750	2.0000	2.4375
10.0630	0.1980	0.0750	2.0000	2.4375
10.0630	0.1980	0.0750	2.0000	2.4375
10.0630	0.1100	0.1500	2.0000	2.4375
10.6250	0.1100	0.1500	2.0000	2.4375
12.3130	0.1100	0.1500	2.0000	2.4375
15.1250	0.1100	0.1500	2.0000	2.4375
19.1250	0.1100	0.1500	2.0000	2.4375
27.0000	0.1100	0.1500	2.0000	2.4375
18.3130	0.1100	0.1500	2.0000	2.4375
13.5630	0.1100	0.1500	2.0000	2.4375
12.0000	0.1100	0.1500	2.0000	2.4375
12.0000	0.0500	0.1500	2.0000	2.4375
12.0000	0.0500	0.1500	2.0000	2.4375
12.0000	0.0500	0.1500	2.0000	2.4375

LRFD RESISTANCE FACTORS FOR STRENGTH-LIMIT STATES
AND CRACK-WIDTH LIMIT AT SERVICE LOAD

YIELDING OF REINFORCEMENT STEEL	1.000
CRUSHING OF CONCRETE OUTER FIBER.....	0.750
SHEARING FAILURE OF CONCRETE	0.900
SPLITTING OF CONCRETE IN RADIAL TENSION	0.900
ALLOWABLE CRACKWIDTH SERVICE LOAD (inch)....	0.010

LARGE DEFORMATION/BUCKLING CODE, IBUCK = 0
IBUCK=0, MEANS SMALL DEFORMATION THEORY FOR GROUP
AND NO BUCKLING PREDICTION.

28x10c1Mod.out

```
- - - - - - - - - - - - - - - - - - - - - - - - - - - - - - - - - - - - - - - -


 REVIEW SYSTEM INPUT DATA


 LEVEL-2 DATA FOR ARCH-TYPE CANNED MESH


    *** MESH PARAMETERS ***
     TYPE OF MESH ------------------------------------- TREN
     DEPTH OF TRENCH ABOVE FOOTING LEVEL (FT) ---------   12.42
     WIDTH OF TRENCH AT FOOTING LEVEL (FT) ------------    5.00
     SLOPE OF TRENCH WALL (H/V) -----------------------    0.00
     MESH SPACING PARAMETER ---------------------------    1.00
     TOTAL SOIL HEIGHT ABOVE CROWN (FT) ---------------    2.00
     MESH HEIGHT ABOVE CROWN (FT) ----------------------    2.00
     SOIL DENSITY ABOVE MESH (PCF) --------------------  140.00
     NUMBER OF ELEMENT LAYERS ABOVE CROWN -------------    3


*** ARCH PARAMETERS ***
     CENTERLINE RISE OF ARCH (IN) ----------------------  125.00
     BOTTOM HALF SPAN OF ARCH (IN) ---------------------  174.00
     SIDE RISE OF ARCH ABOVE FOOTING (IN) -------------   50.94
     FOOTING DEPTH (IN) --------------------------------   24.00
     OUTSIDE FOOTING WIDTH (IN) ------------------------   30.00
     INSIDE FOOTING WIDTH (IN) -------------------------   30.00
     NUMBER OF ARCH SEGMENTS DEFINED -------------------    3

*** CURVED TOP SEGMENT ***
     RADIUS (IN) ---------------------------------------  405.88
     CENTRAL ANGLE (DEG) -------------------------------   24.59
     SEGMENT ARC LENGTH (IN) ---------------------------  174.19
     NUMBER OF BEAM ELEMENTS IN SEGMENT ----------------   13

*** CURVED CORNER SEGMENT ***
     RADIUS (IN) ---------------------------------------  133.94
     CENTRAL ANGLE (DEG) -------------------------------   16.14
     SEGMENT ARC LENGTH (IN) ---------------------------   37.73
     NUMBER OF BEAM ELEMENTS IN SEGMENT ----------------    3

*** STRAIGHT SIDE SEGMENT ***
     DEFLECTION ANGLE (DEG) ----------------------------   90.00
     SEGMENT LENGTH (IN) -------------------------------   50.94
     NUMBER OF BEAM ELEMENTS IN SEGMENT ----------------    3

 FINITE ELEMENT INPUT CONTROLS (PREP)


THE DATA TO BE RUN IS ENTITLED ...

New Level 2 arch mesh

PRINT AND PLOT CONTROL CODES ...
  PRINT CONTROL FOR MESH DATA------------    1
  PLOT FILE CONTROL MESH & RESULS--------    3
  PRINT FINITE ELEMENT RESULTS ----------    1
  INPUT DATA CHECK CODE------------------    0
                                   Page 3
```

28x10c1Mod.out

```
KEY NUMBERS DESCRIBING MESH ...
  THE NUMBER OF LOAD STEPS IS------------   12
  TOTAL NUMBER OF NODES IS---------------  244
  TOTAL NUMBER OF ELEMENTS IS------------  209
  TOTAL NUMBER OF BEAM ELEMENTS IS-------   19
  MAX NUMBER OF BOUNDARY CONDITIONS IS---   36


 EXTENDED LEVEL-2: CHANGES TO CANNED MESH

          * NUMBER OF NODES TO BE CHANGED -------      0 *
          * NUMBER OF ELEMENTS TO BE CHANGED ----      0 *
          * ADDITIONAL BOUNDARY CONDITIONS ------     31 *


 * * * BOUNDARY CONDITIONS * * *
  (FORCES = LBS; DISPLACEMENTS = INCHES; ROTATIONS = DEGREES)

  BOUNDARY      LOAD      X-FORCE     OR      Y-FORCE     OR      X-Y ROTATION
BEAM ROTATIONAL
      NODE      STEP      X-DISPLACEMENT      Y-DISPLACEMENT
BOUNDARY CONDITIONS

       224         9    F =   0.0000E+00    F =  -0.8925E+02      0.0000E+00
      F
       224        10    F =   0.0000E+00    F =  -0.8925E+02      0.0000E+00
      F
       224        11    F =   0.0000E+00    F =  -0.8925E+02      0.0000E+00
      F
       224        12    F =   0.0000E+00    F =  -0.8925E+02      0.0000E+00
      F
       228         9    F =   0.0000E+00    F =   0.0000E+00      0.0000E+00
      F
       228        10    F =   0.0000E+00    F =   0.0000E+00      0.0000E+00
      F
       228        11    F =   0.0000E+00    F =   0.0000E+00      0.0000E+00
      F
       228        12    F =   0.0000E+00    F =   0.0000E+00      0.0000E+00
      F
       224         9    F =   0.0000E+00    F =  -0.4800E+01      0.0000E+00
      F
       225         9    F =   0.0000E+00    F =  -0.9600E+01      0.0000E+00
      F
       226         9    F =   0.0000E+00    F =  -0.9600E+01      0.0000E+00
      F
       227         9    F =   0.0000E+00    F =  -0.9600E+01      0.0000E+00
      F
       228         9    F =   0.0000E+00    F =  -0.9600E+01      0.0000E+00
      F
       229         9    F =   0.0000E+00    F =  -0.9600E+01      0.0000E+00
      F
       230         9    F =   0.0000E+00    F =  -0.9600E+01      0.0000E+00
```

28x10c1Mod.out

```
F
 231          9    F =   0.0000E+00    F =  -0.9600E+01      0.0000E+00
F
 232          9    F =   0.0000E+00    F =  -0.9600E+01      0.0000E+00
F
 233          9    F =   0.0000E+00    F =  -0.9600E+01      0.0000E+00
F
 224          8    F =   0.0000E+00    F =  -0.2188E+01      0.0000E+00
F
 225          8    F =   0.0000E+00    F =  -0.4375E+01      0.0000E+00
F
 226          8    F =   0.0000E+00    F =  -0.4375E+01      0.0000E+00
F
 227          8    F =   0.0000E+00    F =  -0.4375E+01      0.0000E+00
F
 228          8    F =   0.0000E+00    F =  -0.4375E+01      0.0000E+00
F
 229          8    F =   0.0000E+00    F =  -0.4375E+01      0.0000E+00
F
 230          8    F =   0.0000E+00    F =  -0.4357E+01      0.0000E+00
F
 231          8    F =   0.0000E+00    F =  -0.4375E+01      0.0000E+00
F
 232          8    F =   0.0000E+00    F =  -0.4375E+01      0.0000E+00
F
 233          8    F =   0.0000E+00    F =  -0.4375E+01      0.0000E+00
F
 234          8    F =   0.0000E+00    F =  -0.4375E+01      0.0000E+00
F
 235          8    F =   0.0000E+00    F =  -0.4375E+01      0.0000E+00
F
 236          8    F =   0.0000E+00    F =  -0.4375E+01      0.0000E+00
F

* * * * * COMPLETED MESH GENERATION  * * * * *

New Level 2 arch mesh

CALCULATED KEY NUMBERS ...
  THE NUMBER OF DATA ERRORS IS-----------    0
  THE NUMBER OF SOIL MATERIALS IS--------    3
  THE NUMBER OF PIPE-TYPE GROUPS IS------    1
  THE NUMBER OF INTERFACE MATERIALS IS---   19
  BAND WIDTH ESTIMATE (MAX)--------------   88


* * * * MESH DATA HAS BEEN SAVED ON UNIT 14 * * * *


 BEAM-NODE SEQUENCE NUMBERS FOR EACH GROUP


    BEAM-ELEMENT GROUP NUMBER =     1

     BEAM-NODE       MESH-NODE      CONNECTED-GROUP-ELEMENTS
     SEQUENCE        NUMBER         FOREWARD-#     BACKWARD-#
         1             198              1              0
         2             194              2              1
         3             190              3              2
         4             167              4              3
```

5	164	5	4
6	161	6	5
7	158	7	6
8	138	8	7
9	136	9	8
10	134	10	9
11	132	11	10
12	130	12	11
13	128	13	12
14	118	14	13
15	115	15	14
16	109	16	15
17	103	17	16
18	97	18	17
19	91	19	18
20	80	0	19

```
MATERIAL DESCRIPTION FOR SOILS AND INTERFACE
(ALL DENSITY UNITS ARE pcf, ALL MODULUS UNITS ARE psi)

   PROPERTIES FOR MATERIAL  1   ********in site

        DENSITY =    0.14000E+03

        YOUNGS MODULUS= 0.5000E+04
        POISSONS RATIO= 0.3500E+00
        CONFINED MOD.= 0.8025E+04
        LATERAL COEFF.= 0.5385E+00

   PROPERTIES FOR MATERIAL  2   ********Footing

        DENSITY =    0.15000E+03

        YOUNGS MODULUS= 0.3122E+07
        POISSONS RATIO= 0.1700E+00
        CONFINED MOD.= 0.3356E+07
        LATERAL COEFF.= 0.2048E+00

   PROPERTIES FOR MATERIAL  3   ********SW95

        DENSITY =    0.14000E+03

   CONTROLS FOR DUNCAN SOIL MODEL
   WITH SELIG HYPERBOLIC BULK MODULUS FORMULATION

         LRFD STRESS CONTROL..........        0

         ENTERING ELEMENT RATIO.......       0.5000


   HYPERBOLIC STRESS-STRAIN PARAMETERS


         SOIL CLASSIFICATION ............SW95
```

28x10c1Mod.out

COHESION INTERCEPT C	0.0000
FRICTION ANGLE PHIO (DEG).....	48.0000
10-FOLD REDUCTION IN PHIO(DEG)..	8.0000
SCALED MODULUS NUMBER ZK	950.0000
MODULUS EXPONENT ZN	0.6000
FAILURE RATIO RF	0.7000
INIT. BULK MODULUS NUMBER BI....	74.8000
ULT. VOLUMETRIC STRAIN EU	0.0200

INTERFACE ELEMENT MATERIAL-GROUP PROPERTIES

MAT. NO.	NORMAL-ANGLE	COEF-FRICTION	TENSILE-RUPTURE	INITIAL-GAP
1	90.00	0.30000	10.00000	0.00000
2	88.11	0.30000	10.00000	0.00000
3	86.22	0.30000	10.00000	0.00000
4	84.32	0.30000	10.00000	0.00000
5	82.43	0.30000	10.00000	0.00000
6	80.54	0.30000	10.00000	0.00000
7	78.65	0.30000	10.00000	0.00000
8	76.76	0.30000	10.00000	0.00000
9	74.87	0.30000	10.00000	0.00000
10	72.97	0.30000	10.00000	0.00000
11	71.08	0.30000	10.00000	0.00000
12	69.19	0.30000	10.00000	0.00000
13	67.30	0.30000	10.00000	0.00000
14	65.41	0.30000	10.00000	0.00000
15	10.46	0.30000	10.00000	0.00000
16	5.11	0.30000	10.00000	0.00000
17	0.00	0.30000	10.00000	0.00000
18	0.00	0.30000	10.00000	0.00000
19	0.00	0.30000	10.00000	0.00000

LRFD TOTAL LOAD FACTORS PER LOAD STEP

LOAD STEP	LOAD FACTOR	USER COMMENT
1	1.310	Factor for load step #1
2	0.857	Factor for load step #2
3	0.857	Factor for load step #3
4	0.857	Factor for load step #4
5	1.365	Factor for load step #5
6	1.365	Factor for load step #6
7	1.365	Factor for load step #7

28x10c1Mod.out

8	1.365	Factor for load step #8
9	1.750	Factor for load step #9
10	1.750	Factor for load step #10
11	1.750	Factor for load step #11
12	1.750	Factor for load step #12

+ +

SOLUTION OUTPUT RESULTS

+ +

FINITE ELEMENT OUTPUT FOR LOAD STEP 12

+ +

CONCRETE, FACTORED-EVALUATION FOR GROUP 1, LOAD-STEP 12

STRUCTURAL RESPONSES OF CONCRETE-GROUP 1, LOAD-STEP 12
COORDINATES, DISPLACEMENTS AND CRACK DEPTHS ARE INCHES
Y-BAR IS "NEUTRAL AXIS" LOCATION FROM INTERIOR, INCHES
PRESSURES ARE LB/IN**2
MOMENTS ARE IN-LB/IN
THRUST AND SHEAR ARE LB/IN

LOCAL NODE	X-COORD. Y-COORD.	X-DISP. Y-DISP.	N-PRES. S-PRES.	MOMENT THRUST	Y-BAR CRACK DEPTH
1	0.00	0.00000E+00	-0.42662E+02	0.52320E+05	0.64942E+01
	125.00	-0.19960E+01	-0.12716E+02	-0.11470E+04	0.63803E+01
2	13.42	-0.21873E-03	-0.26783E+02	0.48469E+05	0.65127E+01
	124.78	-0.19724E+01	-0.79624E+01	-0.12690E+04	0.63533E+01
3	26.80	0.24532E-02	-0.10905E+02	0.40215E+05	0.65664E+01
	124.11	-0.19050E+01	-0.32088E+01	-0.13630E+04	0.63009E+01
4	40.15	0.10333E-01	-0.19946E+01	0.30452E+05	0.66148E+01
	123.01	-0.18014E+01	-0.54584E+00	-0.14122E+04	0.61961E+01
5	53.46	0.24834E-01	-0.90220E+00	0.20799E+05	0.65476E+01
	121.47	-0.16706E+01	-0.22644E+00	-0.14424E+04	0.59705E+01
6	66.71	0.46452E-01	-0.44670E+01	0.11470E+05	0.65476E+01
	119.48	-0.15218E+01	-0.13045E+01	-0.14778E+04	0.54770E+01
7	79.89	0.74789E-01	-0.36625E+01	0.18376E+04	0.56411E+01

	117.06	-0.13643E+01	-0.10723E+01	-0.15194E+04	0.12922E+01
8	92.98	0.10852E+00	-0.45038E+01	-0.79354E+04	0.24151E+01
	114.21	-0.12073E+01	-0.13344E+01	-0.15622E+04	0.64713E+01
9	105.97	0.14517E+00	-0.53607E+01	-0.17977E+05	0.29481E+01
	110.92	-0.10600E+01	-0.16006E+01	-0.16096E+04	0.65084E+01
10	118.85	0.18095E+00	-0.63259E+01	-0.28423E+05	0.30809E+01
	107.21	-0.93291E+00	-0.18997E+01	-0.16623E+04	0.70932E+01
11	131.59	0.21263E+00	-0.70904E+01	-0.39431E+05	0.34674E+01
	103.08	-0.83259E+00	-0.21409E+01	-0.17208E+04	0.83739E+01
12	144.19	0.23922E+00	-0.76460E+01	-0.51137E+05	0.40809E+01
	98.53	-0.75680E+00	-0.23249E+01	-0.17852E+04	0.10461E+02
13	156.64	0.26144E+00	-0.87470E+01	-0.63652E+05	0.45666E+01
	93.56	-0.69930E+00	-0.26832E+01	-0.18574E+04	0.13520E+02
14	168.91	0.28078E+00	-0.97588E+01	-0.77203E+05	0.57315E+01
	88.19	-0.65360E+00	-0.87338E+01	-0.20125E+04	0.19556E+02
15	171.76	0.31793E+00	-0.77627E+01	-0.66552E+05	0.47460E+01
	75.95	-0.64431E+00	-0.27832E+01	-0.21155E+04	0.12812E+02
16	173.47	0.34339E+00	-0.10403E+02	-0.54701E+05	0.37441E+01
	63.50	-0.64007E+00	-0.22216E+01	-0.20778E+04	0.93249E+01
17	174.00	0.34784E+00	-0.11523E+02	-0.42057E+05	0.33970E+01
	50.94	-0.63902E+00	0.21976E+00	-0.20395E+04	0.81195E+01
18	174.00	0.31619E+00	-0.72226E+01	-0.26415E+05	0.34814E+01
	33.96	-0.63779E+00	0.18436E+01	-0.20183E+04	0.77286E+01
19	174.00	0.25395E+00	-0.24451E+01	-0.12855E+05	0.36437E+01
	16.98	-0.63671E+00	0.41062E+00	-0.20169E+04	0.67894E+01
20	174.00	0.17959E+00	0.23324E+01	0.21237E-09	0.61687E+01
	0.00	-0.63601E+00	-0.10224E+01	-0.20276E+04	0.00000E+00

SHEAR FORCE DIAGNOSTCS FOR CONCRETE-GROUP 1, LOAD STEP 12
-- V-factor is coefficient of sqrt(PFPC) equal to capacity.
-- Shear depth "d" is negative if measured from outer wall.
-- Stirrup load is excess shear force above capacity.

NODE	EQUIVALENT V-factor	SHEAR CAPACITY lbs/inch	APPLIED SHEAR lbs/inch	APPLIED/ CAPACITY ratio	SHEAR DEPTH-d inches	STIRRUP LOAD lbs/inch
1	2.75	1771.50	122.51	0.069	8.00	0.00
2	2.76	1781.72	451.51	0.253	8.00	0.00
3	2.77	1789.60	672.34	0.376	8.00	0.00
4	2.78	1793.72	724.52	0.404	8.00	0.00
5	2.78	1796.25	708.34	0.394	8.00	0.00
6	4.04	2602.75	707.60	0.272	8.00	0.00
7	4.50	2923.16	724.13	0.248	8.06	0.00
8	3.69	2271.60	739.42	0.326	-7.63	0.00
9	2.78	1710.54	764.53	0.447	-7.63	0.00
10	2.48	1634.34	800.61	0.490	-8.19	0.00

28x10c1Mod.out

11	2.18	1733.56	847.63	0.489	-9.88	0.00
12	1.88	1919.42	903.82	0.471	-12.69	0.00
13	1.64	2210.40	972.69	0.440	-16.69	0.00
14	1.43	2836.82	81.68	0.029	-24.56	0.00
15	1.69	2164.67	-895.34	0.414	-15.88	0.00
16	2.04	1834.07	-974.18	0.531	-11.13	0.00
17	2.25	1736.15	-963.48	0.555	-9.56	0.00
18	2.30	1773.22	-859.94	0.485	-9.56	0.00
19	3.75	2893.80	-777.86	0.269	-9.56	0.00
20	4.50	3625.40	-736.34	0.203	10.00	0.00

STRESS AND STRAIN MEASURES FOR CONCRETE-GROUP 1, LOAD STEP 12

NODE	MAXIMUM COMPRESSION psi	AVERAGE SHEAR psi	RADIAL TENSION psi	INNER-WALL STRAIN in/in	OUTER-WALL STRAIN in/in
1	-3935.73	15.74	18.43	0.1727E-02	-0.9639E-03
2	-3766.80	58.03	16.92	0.1588E-02	-0.8956E-03
3	-3398.02	86.41	13.85	0.1299E-02	-0.7466E-03
4	-2729.44	93.11	10.21	0.9658E-03	-0.5768E-03
5	-1947.90	91.03	6.62	0.6347E-03	-0.4116E-03
6	-1179.36	90.94	3.25	0.3239E-03	-0.2492E-03
7	-315.96	92.31	0.00	0.9837E-05	-0.6677E-04
8	-954.78	94.26	0.00	-0.2018E-03	0.3915E-03
9	-1985.09	97.46	0.00	-0.4195E-03	0.7964E-03
10	-2674.91	95.24	0.00	-0.5653E-03	0.1165E-02
11	-2682.68	83.97	0.00	-0.5669E-03	0.1236E-02
12	-2318.72	70.03	0.00	-0.4900E-03	0.1131E-02
13	-1869.66	57.53	0.00	-0.3951E-03	0.9871E-03
14	-1274.58	3.30	0.00	-0.2693E-03	0.7439E-03
15	-2142.59	-55.63	0.00	-0.4528E-03	0.1088E-02
16	-3053.78	-85.87	0.00	-0.6453E-03	0.1452E-02
17	-3041.95	-98.50	0.00	-0.6428E-03	0.1376E-02
18	-2113.98	-87.92	0.00	-0.4467E-03	0.8364E-03
19	-1147.11	-79.53	0.00	-0.2424E-03	0.3389E-03
20	-151.92	-75.28	0.00	-0.3210E-04	-0.3210E-04

STEEL STRESS AND CRACK WIDTHS FOR CONCRETE-GROUP 1, LOAD STEP 12
NOTE: CRACK WIDTH IS REDUCED TO SERVICE-LOAD LEVEL.
ALL OTHER RESPONSES ARE AT FACTORED LOAD LEVEL.

NODE	INNER CAGE psi	OUTER CAGE psi	MAX STRESS TO YIELD ratio	CRACK WIDTH inches
1	37874.12	-9817.69	0.6312	0.00708
2	34769.94	-9251.02	0.5795	0.00613
3	28352.52	-7904.44	0.4725	0.00414
4	20946.57	-6398.21	0.3491	0.00182
5	13558.38	-4989.78	0.2260	0.00000
6	6668.94	-3490.31	0.1111	0.00000
7	-171.71	-1536.43	0.0256	0.00000
8	-2671.97	7897.59	0.1316	0.00000
9	-5667.15	15993.63	0.2666	0.00000
10	-7632.27	24484.58	0.4081	0.00047
11	-8731.44	28025.18	0.4671	0.00097
12	-8782.10	27730.46	0.4622	0.00000

28x10c1Mod.out

13	-7984.48	25842.83	0.4307	0.00000
14	-6191.50	20791.20	0.3465	0.00000
15	-9066.78	28132.92	0.4689	0.00000
16	-10709.76	34256.77	0.5709	0.00290
17	-9763.03	30780.30	0.5130	0.00248
18	-7421.11	18347.82	0.3058	0.00000
19	-4637.49	7036.74	0.1173	0.00000
20	-1023.04	-1023.04	0.0171	0.00000

ASSESSMENT SUMMARY CONCRETE-GROUP 1, LOAD-STEP 12

LRFD SUMMARY EVALUATION FOR GROUP 1, LOAD STEP 12

DESIGN-CRITERION	CONTROL NODE	FACTORED DEMAND	FACTORED CAPACITY	RATIO VALUE
STEEL YIELDING (psi)	1	37874.1	60000.0	0.631
CONCRETE CRUSHING (psi)	1	3935.7	4875.0	0.807
SHEAR FAILURE (lbs/in)	17	963.5	1562.5	0.617
RADIAL-TENSION FAIL (psi)	1	18.4	69.6	0.265

LRFD SERVICE-LOAD PERFORMANCE MEASURES FOR GROUP 1, LOAD STEP 12

NODE NUMBER FOR MAXIMUM CRACK WIDTH 1

MAXIMUM CRACK WIDTH AT SERVICE LOAD (inches) 0.00708

LRFD RATIO: MAX-CRACK-WIDTH / ALLOWABLE 0.71

SPAN LENGTH FOR AUXILIARY EQUATIONS (inches)..... 348.00

* * * * NORMAL EXIT FROM CANDE * * * *

28x10c1Mod.out

```
*** WELCOME TO CANDE-2013(version 3/1/2013) ***

MASTER CONTROL AND PIPE-TYPE DATA FOR PROBLEM #  1

        USER TITLE: 28x8C1

        EXECUTION MODE ..................   ANALYS

        SOLUTION LEVEL ..................  #2 AUTO

        METHODOLOGY (LRFD OR SERVICE) ...     LRFD

        NUMBER OF PIPE-ELEMENT GROUPS ....       1

        MAXIMUM ITERATIONS PER STEP ......      30


        CULVERT PIPE-TYPE ............... CONCRETE

        CANNED MESH CODE # ..............        3

        NUMBER OF BEAM ELEMENTS .........       19

        CONCRETE MATERIAL PROPERTIES ARE AS FOLLOWS

             COMPRESSION STRENGTH (psi)..........       6500.000

             ELASTIC YOUNGS MODULUS (psi)........    4595487.000

             POISSON RATIO ......................          0.170

             CONCRETE DENSITY (pcf) .............        150.000

             INITIAL TENSILE CRACKING STRAIN.....       0.000010

             INITIAL COMPRESSION YIELD STRAIN....       0.000687

             INITIAL COMPRESSION CRUSH STRAIN ...       0.002000

             SHEAR STRENGTH MODEL (NSHEAR) # ...          1
             (VARIABLE STRENGTH MODEL PRINTED IN OUTPUT)

             CONCRETE CRACK-WIDTH MODEL NAME.....   HEGER-McGRATH
             (DRIVEN BY TENSILE STRAIN IN STEEL)

        STEEL REINFORCEMENT MATERIAL PROPERTIES

             TYPE OF STEEL CAGES (RSHAPE) .......     ARBIT

             STEEL YIELD STRENGTH (psi)..........      60000.000

             STEEL ELASTIC MODULUS (psi).........   29000000.000
```

28x10c1Mod.out

STEEL POISSON RATIO 0.300000

STEEL YIELDING STRAIN 0.001883

NONLINEAR MODELING CODE (1,2,3) 3

STEEL-BASED CRACKWIDTH PREDICTION PARAMETERS

REBAR SPACING INNER ROW (SLI), (in)	4.00
REBAR SPACING OUTER ROW (SLO), (in)	4.00
NUMBER OF STEEL LAYERS FOR INNER CAGE	1
NUMBER OF STEEL LAYERS FOR OUTER CAGE	1
HEGER-MCGRATH CODE NUMBER FOR STEEL TYPE..	3

WALL THICKNESS, REBAR AREAS AND COVER DEPTHS

WALL-THICK	INNER-REBAR	OUTER-REBAR	INNER-COVER	OUTER COVER
10.0000	0.1980	0.0750	2.0000	2.4375
10.0000	0.1980	0.0750	2.0000	2.4375
10.0000	0.1980	0.0750	2.0000	2.4375
10.0000	0.1980	0.0750	2.0000	2.4375
10.0000	0.1980	0.0750	2.0000	2.4375
10.0000	0.1980	0.0750	2.0000	2.4375
10.0630	0.1980	0.0750	2.0000	2.4375
10.0630	0.1980	0.0750	2.0000	2.4375
10.0630	0.1100	0.1500	2.0000	2.4375
10.6250	0.1100	0.1500	2.0000	2.4375
12.3130	0.1100	0.1500	2.0000	2.4375
15.1250	0.1100	0.1500	2.0000	2.4375
19.1250	0.1100	0.1500	2.0000	2.4375
27.0000	0.1100	0.1500	2.0000	2.4375
18.3130	0.1100	0.1500	2.0000	2.4375
13.5630	0.1100	0.1500	2.0000	2.4375
12.0000	0.1100	0.1500	2.0000	2.4375
12.0000	0.0500	0.1500	2.0000	2.4375
12.0000	0.0500	0.1500	2.0000	2.4375
12.0000	0.0500	0.1500	2.0000	2.4375

LRFD RESISTANCE FACTORS FOR STRENGTH-LIMIT STATES
AND CRACK-WIDTH LIMIT AT SERVICE LOAD

YIELDING OF REINFORCEMENT STEEL	1.000
CRUSHING OF CONCRETE OUTER FIBER.....	0.750
SHEARING FAILURE OF CONCRETE	0.900
SPLITTING OF CONCRETE IN RADIAL TENSION	0.900
ALLOWABLE CRACKWIDTH SERVICE LOAD (inch)....	0.010

LARGE DEFORMATION/BUCKLING CODE, IBUCK = 0
IBUCK=0, MEANS SMALL DEFORMATION THEORY FOR GROUP
AND NO BUCKLING PREDICTION.

28x10c1Mod.out

```
- - - - - - - - - - - - - - - - - - - - - - - - - - - - - - - - - - - - - - - -


 REVIEW SYSTEM INPUT DATA


 LEVEL-2 DATA FOR ARCH-TYPE CANNED MESH


    *** MESH PARAMETERS ***
     TYPE OF MESH ------------------------------------- TREN
     DEPTH OF TRENCH ABOVE FOOTING LEVEL (FT) ---------   12.42
     WIDTH OF TRENCH AT FOOTING LEVEL (FT) ------------    5.00
     SLOPE OF TRENCH WALL (H/V) -----------------------    0.00
     MESH SPACING PARAMETER ---------------------------    1.00
     TOTAL SOIL HEIGHT ABOVE CROWN (FT) ---------------    2.00
     MESH HEIGHT ABOVE CROWN (FT) ---------------------    2.00
     SOIL DENSITY ABOVE MESH (PCF) --------------------  140.00
     NUMBER OF ELEMENT LAYERS ABOVE CROWN -------------    3


*** ARCH PARAMETERS ***
     CENTERLINE RISE OF ARCH (IN) ---------------------  125.00
     BOTTOM HALF SPAN OF ARCH (IN) --------------------  174.00
     SIDE RISE OF ARCH ABOVE FOOTING (IN) -------------   50.94
     FOOTING DEPTH (IN) -------------------------------   24.00
     OUTSIDE FOOTING WIDTH (IN) -----------------------   30.00
     INSIDE FOOTING WIDTH (IN) ------------------------   30.00
     NUMBER OF ARCH SEGMENTS DEFINED ------------------    3

*** CURVED TOP SEGMENT ***
     RADIUS (IN) --------------------------------------  405.88
     CENTRAL ANGLE (DEG) ------------------------------   24.59
     SEGMENT ARC LENGTH (IN) --------------------------  174.19
     NUMBER OF BEAM ELEMENTS IN SEGMENT ---------------   13

*** CURVED CORNER SEGMENT ***
     RADIUS (IN) --------------------------------------  133.94
     CENTRAL ANGLE (DEG) ------------------------------   16.14
     SEGMENT ARC LENGTH (IN) --------------------------   37.73
     NUMBER OF BEAM ELEMENTS IN SEGMENT ---------------    3

*** STRAIGHT SIDE SEGMENT ***
     DEFLECTION ANGLE (DEG) ---------------------------   90.00
     SEGMENT LENGTH (IN) ------------------------------   50.94
     NUMBER OF BEAM ELEMENTS IN SEGMENT ---------------    3

 FINITE ELEMENT INPUT CONTROLS (PREP)


THE DATA TO BE RUN IS ENTITLED ...

New Level 2 arch mesh

PRINT AND PLOT CONTROL CODES ...
  PRINT CONTROL FOR MESH DATA------------    1
  PLOT FILE CONTROL MESH & RESULS--------    3
  PRINT FINITE ELEMENT RESULTS ----------    1
  INPUT DATA CHECK CODE------------------    0
                                   Page 3
```

28x10c1Mod.out

```
KEY NUMBERS DESCRIBING MESH ...
  THE NUMBER OF LOAD STEPS IS------------   13
  TOTAL NUMBER OF NODES IS---------------  244
  TOTAL NUMBER OF ELEMENTS IS------------  209
  TOTAL NUMBER OF BEAM ELEMENTS IS-------   19
  MAX NUMBER OF BOUNDARY CONDITIONS IS---   36



 EXTENDED LEVEL-2: CHANGES TO CANNED MESH

          * NUMBER OF NODES TO BE CHANGED -------      0 *
          * NUMBER OF ELEMENTS TO BE CHANGED ----      0 *
          * ADDITIONAL BOUNDARY CONDITIONS ------     31 *



 * * * BOUNDARY CONDITIONS * * *
  (FORCES = LBS; DISPLACEMENTS = INCHES; ROTATIONS = DEGREES)

  BOUNDARY      LOAD      X-FORCE     OR      Y-FORCE     OR      X-Y ROTATION
BEAM ROTATIONAL
     NODE       STEP      X-DISPLACEMENT      Y-DISPLACEMENT
BOUNDARY CONDITIONS

      224         9    F =   0.0000E+00    F =  -0.8925E+02      0.0000E+00
     F
      224        10    F =   0.0000E+00    F =  -0.8925E+02      0.0000E+00
     F
      224        11    F =   0.0000E+00    F =  -0.8925E+02      0.0000E+00
     F
      224        12    F =   0.0000E+00    F =  -0.8925E+02      0.0000E+00
     F
      228         9    F =   0.0000E+00    F =   0.0000E+00      0.0000E+00
     F
      228        10    F =   0.0000E+00    F =   0.0000E+00      0.0000E+00
     F
      228        11    F =   0.0000E+00    F =   0.0000E+00      0.0000E+00
     F
      228        12    F =   0.0000E+00    F =   0.0000E+00      0.0000E+00
     F
      224         9    F =   0.0000E+00    F =  -0.4800E+01      0.0000E+00
     F
      225         9    F =   0.0000E+00    F =  -0.9600E+01      0.0000E+00
     F
      226         9    F =   0.0000E+00    F =  -0.9600E+01      0.0000E+00
     F
      227         9    F =   0.0000E+00    F =  -0.9600E+01      0.0000E+00
     F
      228         9    F =   0.0000E+00    F =  -0.9600E+01      0.0000E+00
     F
      229         9    F =   0.0000E+00    F =  -0.9600E+01      0.0000E+00
     F
      230         9    F =   0.0000E+00    F =  -0.9600E+01      0.0000E+00
```

28x10c1Mod.out

```
F
 231          9    F =   0.0000E+00    F =  -0.9600E+01      0.0000E+00
F
 232          9    F =   0.0000E+00    F =  -0.9600E+01      0.0000E+00
F
 233          9    F =   0.0000E+00    F =  -0.9600E+01      0.0000E+00
F
 224         13    F =   0.0000E+00    F =  -0.2188E+01      0.0000E+00
F
 225         13    F =   0.0000E+00    F =  -0.4375E+01      0.0000E+00
F
 226         13    F =   0.0000E+00    F =  -0.4375E+01      0.0000E+00
F
 227         13    F =   0.0000E+00    F =  -0.4375E+01      0.0000E+00
F
 228         13    F =   0.0000E+00    F =  -0.4375E+01      0.0000E+00
F
 229         13    F =   0.0000E+00    F =  -0.4375E+01      0.0000E+00
F
 230         13    F =   0.0000E+00    F =  -0.4357E+01      0.0000E+00
F
 231         13    F =   0.0000E+00    F =  -0.4375E+01      0.0000E+00
F
 232         13    F =   0.0000E+00    F =  -0.4375E+01      0.0000E+00
F
 233         13    F =   0.0000E+00    F =  -0.4375E+01      0.0000E+00
F
 234         13    F =   0.0000E+00    F =  -0.4375E+01      0.0000E+00
F
 235         13    F =   0.0000E+00    F =  -0.4375E+01      0.0000E+00
F
 236         13    F =   0.0000E+00    F =  -0.4375E+01      0.0000E+00
F

* * * * * COMPLETED MESH GENERATION  * * * * *

New Level 2 arch mesh

CALCULATED KEY NUMBERS ...
  THE NUMBER OF DATA ERRORS IS-----------    0
  THE NUMBER OF SOIL MATERIALS IS--------    3
  THE NUMBER OF PIPE-TYPE GROUPS IS------    1
  THE NUMBER OF INTERFACE MATERIALS IS---   19
  BAND WIDTH ESTIMATE (MAX)--------------   88


* * * * MESH DATA HAS BEEN SAVED ON UNIT 14 * * * *


 BEAM-NODE SEQUENCE NUMBERS FOR EACH GROUP


    BEAM-ELEMENT GROUP NUMBER =    1

     BEAM-NODE       MESH-NODE      CONNECTED-GROUP-ELEMENTS
     SEQUENCE        NUMBER         FOREWARD-#     BACKWARD-#
         1             198              1              0
         2             194              2              1
         3             190              3              2
         4             167              4              3
```

5	164	5	4
6	161	6	5
7	158	7	6
8	138	8	7
9	136	9	8
10	134	10	9
11	132	11	10
12	130	12	11
13	128	13	12
14	118	14	13
15	115	15	14
16	109	16	15
17	103	17	16
18	97	18	17
19	91	19	18
20	80	0	19

```
MATERIAL DESCRIPTION FOR SOILS AND INTERFACE
(ALL DENSITY UNITS ARE pcf, ALL MODULUS UNITS ARE psi)

   PROPERTIES FOR MATERIAL  1   ********in site

        DENSITY =    0.14000E+03

        YOUNGS MODULUS= 0.5000E+04
        POISSONS RATIO= 0.3500E+00
        CONFINED MOD.= 0.8025E+04
        LATERAL COEFF.= 0.5385E+00

   PROPERTIES FOR MATERIAL  2   ********Footing

        DENSITY =    0.15000E+03

        YOUNGS MODULUS= 0.3122E+07
        POISSONS RATIO= 0.1700E+00
        CONFINED MOD.= 0.3356E+07
        LATERAL COEFF.= 0.2048E+00

   PROPERTIES FOR MATERIAL  3   ********SW95

        DENSITY =    0.14000E+03

   CONTROLS FOR DUNCAN SOIL MODEL
   WITH SELIG HYPERBOLIC BULK MODULUS FORMULATION

         LRFD STRESS CONTROL..........        0

         ENTERING ELEMENT RATIO.......       0.5000


   HYPERBOLIC STRESS-STRAIN PARAMETERS


         SOIL CLASSIFICATION ............SW95
```

28x10c1Mod.out

COHESION INTERCEPT C	0.0000
FRICTION ANGLE PHIO (DEG).....	48.0000
10-FOLD REDUCTION IN PHIO(DEG)..	8.0000
SCALED MODULUS NUMBER ZK	950.0000
MODULUS EXPONENT ZN	0.6000
FAILURE RATIO RF	0.7000
INIT. BULK MODULUS NUMBER BI....	74.8000
ULT. VOLUMETRIC STRAIN EU	0.0200

INTERFACE ELEMENT MATERIAL-GROUP PROPERTIES

MAT. NO.	NORMAL-ANGLE	COEF-FRICTION	TENSILE-RUPTURE	INITIAL-GAP
1	90.00	0.40000	10.00000	0.00000
2	88.11	0.40000	10.00000	0.00000
3	86.22	0.40000	10.00000	0.00000
4	84.32	0.40000	10.00000	0.00000
5	82.43	0.40000	10.00000	0.00000
6	80.54	0.40000	10.00000	0.00000
7	78.65	0.40000	10.00000	0.00000
8	76.76	0.40000	10.00000	0.00000
9	74.87	0.40000	10.00000	0.00000
10	72.97	0.40000	10.00000	0.00000
11	71.08	0.40000	10.00000	0.00000
12	69.19	0.40000	10.00000	0.00000
13	67.30	0.40000	10.00000	0.00000
14	65.41	0.40000	10.00000	0.00000
15	10.46	0.40000	10.00000	0.00000
16	5.11	0.40000	10.00000	0.00000
17	0.00	0.40000	10.00000	0.00000
18	0.00	0.40000	10.00000	0.00000
19	0.00	0.40000	10.00000	0.00000

LRFD TOTAL LOAD FACTORS PER LOAD STEP

LOAD STEP	LOAD FACTOR	USER COMMENT
1	1.310	Factor for load step #1
2	0.857	Factor for load step #2
3	0.857	Factor for load step #3
4	0.857	Factor for load step #4
5	1.365	Factor for load step #5
6	1.365	Factor for load step #6
7	1.365	Factor for load step #7

28x10c1Mod.out

8	1.365	Factor for load step #8
9	1.750	Factor for load step #9
10	1.750	Factor for load step #10
11	1.750	Factor for load step #11
12	1.750	Factor for load step #12
13	1.500	Factor for load step #13

\+ +

SOLUTION OUTPUT RESULTS

\+ +

FINITE ELEMENT OUTPUT FOR LOAD STEP 13

\+ +

CONCRETE, FACTORED-EVALUATION FOR GROUP 1, LOAD-STEP 13

STRUCTURAL RESPONSES OF CONCRETE-GROUP 1, LOAD-STEP 13
COORDINATES, DISPLACEMENTS AND CRACK DEPTHS ARE INCHES
Y-BAR IS "NEUTRAL AXIS" LOCATION FROM INTERIOR, INCHES
PRESSURES ARE LB/IN**2
MOMENTS ARE IN-LB/IN
THRUST AND SHEAR ARE LB/IN

LOCAL NODE	X-COORD. Y-COORD.	X-DISP. Y-DISP.	N-PRES. S-PRES.	MOMENT THRUST	Y-BAR CRACK DEPTH
1	0.00	0.00000E+00	-0.42076E+02	0.51908E+05	0.65127E+01
	125.00	-0.19933E+01	-0.16566E+02	-0.10826E+04	0.63923E+01
2	13.42	-0.19700E-03	-0.26322E+02	0.48117E+05	0.65127E+01
	124.78	-0.19699E+01	-0.10350E+02	-0.12365E+04	0.63574E+01
3	26.80	0.24549E-02	-0.10568E+02	0.39992E+05	0.65127E+01
	124.11	-0.19031E+01	-0.41351E+01	-0.13524E+04	0.63015E+01
4	40.15	0.10273E-01	-0.24929E+01	0.30413E+05	0.66148E+01
	123.01	-0.18002E+01	-0.91257E+00	-0.14099E+04	0.61960E+01
5	53.46	0.24680E-01	-0.12457E+01	0.20855E+05	0.65476E+01
	121.47	-0.16702E+01	-0.42857E+00	-0.14436E+04	0.59716E+01
6	66.71	0.46186E-01	-0.46204E+01	0.11558E+05	0.65476E+01
	119.48	-0.15222E+01	-0.17886E+01	-0.14835E+04	0.54818E+01

28x10c1Mod.out

7	79.89	0.74394E-01	-0.37258E+01	0.19341E+04	0.55100E+01
	117.06	-0.13654E+01	-0.14389E+01	-0.15308E+04	0.13492E+01
8	92.98	0.10799E+00	-0.45554E+01	-0.78373E+04	0.24151E+01
	114.21	-0.12090E+01	-0.17791E+01	-0.15790E+04	0.64680E+01
9	105.97	0.14449E+00	-0.53787E+01	-0.17879E+05	0.29481E+01
	110.92	-0.10621E+01	-0.21173E+01	-0.16329E+04	0.64971E+01
10	118.85	0.18011E+00	-0.63959E+01	-0.28318E+05	0.30809E+01
	107.21	-0.93557E+00	-0.25319E+01	-0.16932E+04	0.70843E+01
11	131.59	0.21164E+00	-0.72710E+01	-0.39318E+05	0.34674E+01
	103.08	-0.83564E+00	-0.28917E+01	-0.17610E+04	0.83631E+01
12	144.19	0.23809E+00	-0.80654E+01	-0.51031E+05	0.40809E+01
	98.53	-0.76018E+00	-0.31485E+01	-0.18360E+04	0.10446E+02
13	156.64	0.26018E+00	-0.96032E+01	-0.63605E+05	0.45666E+01
	93.56	-0.70297E+00	-0.37072E+01	-0.19208E+04	0.13485E+02
14	168.91	0.27939E+00	-0.11393E+02	-0.77341E+05	0.57315E+01
	88.19	-0.65753E+00	-0.68595E+01	-0.20685E+04	0.19523E+02
15	171.76	0.31625E+00	-0.89533E+01	-0.66463E+05	0.47460E+01
	75.95	-0.64829E+00	-0.24248E+01	-0.21541E+04	0.12800E+02
16	173.47	0.34144E+00	-0.10940E+02	-0.54529E+05	0.37441E+01
	63.50	-0.64407E+00	-0.26424E+01	-0.21160E+04	0.93154E+01
17	174.00	0.34568E+00	-0.11990E+02	-0.41841E+05	0.33970E+01
	50.94	-0.64301E+00	-0.86048E-01	-0.20823E+04	0.81080E+01
18	174.00	0.31395E+00	-0.74884E+01	-0.26226E+05	0.34814E+01
	33.96	-0.64176E+00	0.26317E+01	-0.20567E+04	0.77094E+01
19	174.00	0.25180E+00	-0.23798E+01	-0.12770E+05	0.36437E+01
	16.98	-0.64065E+00	0.62894E+00	-0.20467E+04	0.67636E+01
20	174.00	0.17759E+00	0.27288E+01	0.10891E-09	0.61687E+01
	0.00	-0.63995E+00	-0.13739E+01	-0.20537E+04	0.00000E+00

SHEAR FORCE DIAGNOSTCS FOR CONCRETE-GROUP 1, LOAD STEP 13
-- V-factor is coefficient of sqrt(PFPC) equal to capacity.
-- Shear depth "d" is negative if measured from outer wall.
-- Stirrup load is excess shear force above capacity.

NODE	EQUIVALENT V-factor	SHEAR CAPACITY lbs/inch	APPLIED SHEAR lbs/inch	APPLIED/ CAPACITY ratio	SHEAR DEPTH-d inches	STIRRUP LOAD lbs/inch
1	2.74	1766.11	120.58	0.068	8.00	0.00
2	2.76	1779.00	444.46	0.250	8.00	0.00
3	2.77	1788.71	660.65	0.369	8.00	0.00
4	2.78	1793.52	714.13	0.398	8.00	0.00
5	2.79	1796.35	703.60	0.392	8.00	0.00
6	4.01	2586.16	706.08	0.273	8.00	0.00
7	4.50	2923.16	723.77	0.248	8.06	0.00
8	3.74	2296.62	739.37	0.322	-7.63	0.00

9	2.80	1721.92	764.29	0.444	-7.63	0.00
10	2.48	1636.55	800.06	0.489	-8.19	0.00
11	2.18	1736.20	847.58	0.488	-9.88	0.00
12	1.88	1922.46	906.28	0.471	-12.69	0.00
13	1.65	2213.89	981.82	0.443	-16.69	0.00
14	1.43	2839.65	79.55	0.028	-24.56	0.00
15	1.69	2166.83	-907.71	0.419	-15.88	0.00
16	2.05	1836.47	-979.26	0.533	-11.13	0.00
17	2.26	1739.00	-964.42	0.555	-9.56	0.00
18	2.31	1782.97	-856.08	0.480	-9.56	0.00
19	3.77	2904.83	-772.30	0.266	-9.56	0.00
20	4.50	3625.40	-731.89	0.202	10.00	0.00

STRESS AND STRAIN MEASURES FOR CONCRETE-GROUP 1, LOAD STEP 13

NODE	MAXIMUM COMPRESSION psi	AVERAGE SHEAR psi	RADIAL TENSION psi	INNER-WALL STRAIN in/in	OUTER-WALL STRAIN in/in
1	-3905.00	15.50	18.31	0.1714E-02	-0.9514E-03
2	-3747.20	57.12	16.81	0.1577E-02	-0.8877E-03
3	-3386.85	84.90	13.77	0.1291E-02	-0.7421E-03
4	-2726.26	91.78	10.20	0.9647E-03	-0.5761E-03
5	-1952.71	90.42	6.64	0.6365E-03	-0.4126E-03
6	-1187.65	90.74	3.28	0.3266E-03	-0.2510E-03
7	-320.08	92.27	0.00	0.1047E-04	-0.6764E-04
8	-961.58	94.26	0.00	-0.2032E-03	0.3936E-03
9	-1980.87	97.43	0.00	-0.4186E-03	0.7909E-03
10	-2671.74	95.17	0.00	-0.5646E-03	0.1160E-02
11	-2682.34	83.97	0.00	-0.5668E-03	0.1231E-02
12	-2321.50	70.22	0.00	-0.4906E-03	0.1128E-02
13	-1878.36	58.07	0.00	-0.3969E-03	0.9829E-03
14	-1283.89	3.21	0.00	-0.2713E-03	0.7445E-03
15	-2144.70	-56.40	0.00	-0.4532E-03	0.1085E-02
16	-3050.92	-86.32	0.00	-0.6447E-03	0.1446E-02
17	-3035.13	-98.60	0.00	-0.6414E-03	0.1367E-02
18	-2108.07	-87.52	0.00	-0.4455E-03	0.8284E-03
19	-1147.79	-78.96	0.00	-0.2425E-03	0.3362E-03
20	-153.87	-74.83	0.00	-0.3252E-04	-0.3252E-04

STEEL STRESS AND CRACK WIDTHS FOR CONCRETE-GROUP 1, LOAD STEP 13
NOTE: CRACK WIDTH IS REDUCED TO SERVICE-LOAD LEVEL.
ALL OTHER RESPONSES ARE AT FACTORED LOAD LEVEL.

NODE	INNER CAGE psi	OUTER CAGE psi	MAX STRESS TO YIELD ratio	CRACK WIDTH inches
1	37621.98	-9619.42	0.6270	0.00699
2	34539.00	-9145.84	0.5757	0.00604
3	28193.95	-7852.80	0.4699	0.00407
4	20921.95	-6390.82	0.3487	0.00180
5	13597.68	-5000.33	0.2266	0.00000
6	6727.70	-3511.20	0.1121	0.00000
7	-160.98	-1552.56	0.0259	0.00000
8	-2695.67	7936.03	0.1323	0.00000
9	-5679.05	15868.40	0.2645	0.00000
10	-7649.24	24349.22	0.4058	0.00041

28x10c1Mod.out

11	-8755.84	27895.65	0.4649	0.00090
12	-8814.95	27621.82	0.4604	0.00000
13	-8050.93	25718.37	0.4286	0.00000
14	-6248.22	20802.20	0.3467	0.00000
15	-9088.11	28062.15	0.4677	0.00000
16	-10721.57	34103.33	0.5684	0.00281
17	-9772.27	30562.62	0.5094	0.00238
18	-7430.32	18153.41	0.3026	0.00000
19	-4655.60	6967.65	0.1161	0.00000
20	-1036.21	-1036.21	0.0173	0.00000

ASSESSMENT SUMMARY CONCRETE-GROUP 1, LOAD-STEP 13

LRFD SUMMARY EVALUATION FOR GROUP 1, LOAD STEP 13

DESIGN-CRITERION	CONTROL NODE	FACTORED DEMAND	FACTORED CAPACITY	RATIO VALUE
STEEL YIELDING (psi)	1	37622.0	60000.0	0.627
CONCRETE CRUSHING (psi)	1	3905.0	4875.0	0.801
SHEAR FAILURE (lbs/in)	17	964.4	1565.1	0.616
RADIAL-TENSION FAIL (psi)	1	18.3	69.6	0.263

LRFD SERVICE-LOAD PERFORMANCE MEASURES FOR GROUP 1, LOAD STEP 13

NODE NUMBER FOR MAXIMUM CRACK WIDTH 1

MAXIMUM CRACK WIDTH AT SERVICE LOAD (inches) 0.00699

LRFD RATIO: MAX-CRACK-WIDTH / ALLOWABLE 0.70

SPAN LENGTH FOR AUXILIARY EQUATIONS (inches)..... 348.00

* * * * NORMAL EXIT FROM CANDE * * * *

28x10c2Mod.out

```
*** WELCOME TO CANDE-2013(version 3/1/2013) ***

MASTER CONTROL AND PIPE-TYPE DATA FOR PROBLEM #  1

        USER TITLE: 28x8C2

        EXECUTION MODE ..................   ANALYS

        SOLUTION LEVEL ..................  #2 AUTO

        METHODOLOGY (LRFD OR SERVICE) ...     LRFD

        NUMBER OF PIPE-ELEMENT GROUPS ....       1

        MAXIMUM ITERATIONS PER STEP ......      30


        CULVERT PIPE-TYPE ............... CONCRETE

        CANNED MESH CODE # ..............        3

        NUMBER OF BEAM ELEMENTS .........       19

        CONCRETE MATERIAL PROPERTIES ARE AS FOLLOWS

             COMPRESSION STRENGTH (psi)..........       6500.000

             ELASTIC YOUNGS MODULUS (psi)........    4595487.000

             POISSON RATIO ......................          0.170

             CONCRETE DENSITY (pcf) .............        150.000

             INITIAL TENSILE CRACKING STRAIN.....       0.000010

             INITIAL COMPRESSION YIELD STRAIN....       0.000687

             INITIAL COMPRESSION CRUSH STRAIN ...       0.002000

             SHEAR STRENGTH MODEL (NSHEAR) # ...          1
             (VARIABLE STRENGTH MODEL PRINTED IN OUTPUT)

             CONCRETE CRACK-WIDTH MODEL NAME.....   HEGER-McGRATH
             (DRIVEN BY TENSILE STRAIN IN STEEL)

        STEEL REINFORCEMENT MATERIAL PROPERTIES

             TYPE OF STEEL CAGES (RSHAPE) .......     ARBIT

             STEEL YIELD STRENGTH (psi)..........      60000.000

             STEEL ELASTIC MODULUS (psi).........   29000000.000
```

28x10c2Mod.out

STEEL POISSON RATIO 0.300000

STEEL YIELDING STRAIN 0.001883

NONLINEAR MODELING CODE (1,2,3) 3

STEEL-BASED CRACKWIDTH PREDICTION PARAMETERS
REBAR SPACING INNER ROW (SLI), (in) 4.00
REBAR SPACING OUTER ROW (SLO), (in) 4.00
NUMBER OF STEEL LAYERS FOR INNER CAGE 1
NUMBER OF STEEL LAYERS FOR OUTER CAGE 1
HEGER-MCGRATH CODE NUMBER FOR STEEL TYPE.. 3

WALL THICKNESS, REBAR AREAS AND COVER DEPTHS

WALL-THICK	INNER-REBAR	OUTER-REBAR	INNER-COVER	OUTER COVER
10.0000	0.1980	0.0750	2.0000	2.4375
10.0000	0.1980	0.0750	2.0000	2.4375
10.0000	0.1980	0.0750	2.0000	2.4375
10.0000	0.1980	0.0750	2.0000	2.4375
10.0000	0.1980	0.0750	2.0000	2.4375
10.0000	0.1980	0.0750	2.0000	2.4375
10.0630	0.1980	0.0750	2.0000	2.4375
10.0630	0.1980	0.0750	2.0000	2.4375
10.0630	0.1100	0.1500	2.0000	2.4375
10.6250	0.1100	0.1500	2.0000	2.4375
12.3130	0.1100	0.1500	2.0000	2.4375
15.1250	0.1100	0.1500	2.0000	2.4375
19.1250	0.1100	0.1500	2.0000	2.4375
27.0000	0.1100	0.1500	2.0000	2.4375
18.3130	0.1100	0.1500	2.0000	2.4375
13.5630	0.1100	0.1500	2.0000	2.4375
12.0000	0.1100	0.1500	2.0000	2.4375
12.0000	0.0500	0.1500	2.0000	2.4375
12.0000	0.0500	0.1500	2.0000	2.4375
12.0000	0.0500	0.1500	2.0000	2.4375

LRFD RESISTANCE FACTORS FOR STRENGTH-LIMIT STATES
AND CRACK-WIDTH LIMIT AT SERVICE LOAD

YIELDING OF REINFORCEMENT STEEL 1.000

CRUSHING OF CONCRETE OUTER FIBER..... 0.750

SHEARING FAILURE OF CONCRETE 0.900

SPLITTING OF CONCRETE IN RADIAL TENSION 0.900

ALLOWABLE CRACKWIDTH SERVICE LOAD (inch).... 0.010

LARGE DEFORMATION/BUCKLING CODE, IBUCK = 0
IBUCK=0, MEANS SMALL DEFORMATION THEORY FOR GROUP
AND NO BUCKLING PREDICTION.

28x10c2Mod.out

```
- - - - - - - - - - - - - - - - - - - - - - - - - - - - - - - - - - - - - - - -


 REVIEW SYSTEM INPUT DATA


 LEVEL-2 DATA FOR ARCH-TYPE CANNED MESH


    *** MESH PARAMETERS ***
     TYPE OF MESH ------------------------------------- TREN
     DEPTH OF TRENCH ABOVE FOOTING LEVEL (FT) ---------   12.42
     WIDTH OF TRENCH AT FOOTING LEVEL (FT) ------------    5.00
     SLOPE OF TRENCH WALL (H/V) -----------------------    0.00
     MESH SPACING PARAMETER ---------------------------    1.00
     TOTAL SOIL HEIGHT ABOVE CROWN (FT) ---------------    2.00
     MESH HEIGHT ABOVE CROWN (FT) ----------------------    2.00
     SOIL DENSITY ABOVE MESH (PCF) --------------------  140.00
     NUMBER OF ELEMENT LAYERS ABOVE CROWN -------------    3


*** ARCH PARAMETERS ***
     CENTERLINE RISE OF ARCH (IN) ----------------------  125.00
     BOTTOM HALF SPAN OF ARCH (IN) ---------------------  174.00
     SIDE RISE OF ARCH ABOVE FOOTING (IN) -------------   50.94
     FOOTING DEPTH (IN) --------------------------------   24.00
     OUTSIDE FOOTING WIDTH (IN) ------------------------   30.00
     INSIDE FOOTING WIDTH (IN) -------------------------   30.00
     NUMBER OF ARCH SEGMENTS DEFINED -------------------    3

*** CURVED TOP SEGMENT ***
     RADIUS (IN) ---------------------------------------  405.88
     CENTRAL ANGLE (DEG) -------------------------------   24.59
     SEGMENT ARC LENGTH (IN) ---------------------------  174.19
     NUMBER OF BEAM ELEMENTS IN SEGMENT ----------------   13

*** CURVED CORNER SEGMENT ***
     RADIUS (IN) ---------------------------------------  133.94
     CENTRAL ANGLE (DEG) -------------------------------   16.14
     SEGMENT ARC LENGTH (IN) ---------------------------   37.73
     NUMBER OF BEAM ELEMENTS IN SEGMENT ----------------    3

*** STRAIGHT SIDE SEGMENT ***
     DEFLECTION ANGLE (DEG) ----------------------------   90.00
     SEGMENT LENGTH (IN) -------------------------------   50.94
     NUMBER OF BEAM ELEMENTS IN SEGMENT ----------------    3

 FINITE ELEMENT INPUT CONTROLS (PREP)


THE DATA TO BE RUN IS ENTITLED ...

New Level 2 arch mesh

PRINT AND PLOT CONTROL CODES ...
  PRINT CONTROL FOR MESH DATA------------    1
  PLOT FILE CONTROL MESH & RESULS--------    3
  PRINT FINITE ELEMENT RESULTS ----------    1
  INPUT DATA CHECK CODE------------------    0
                                  Page 3
```

28x10c2Mod.out

```
KEY NUMBERS DESCRIBING MESH ...
  THE NUMBER OF LOAD STEPS IS------------   13
  TOTAL NUMBER OF NODES IS---------------  244
  TOTAL NUMBER OF ELEMENTS IS------------  209
  TOTAL NUMBER OF BEAM ELEMENTS IS-------   19
  MAX NUMBER OF BOUNDARY CONDITIONS IS---   36



 EXTENDED LEVEL-2: CHANGES TO CANNED MESH

          * NUMBER OF NODES TO BE CHANGED -------      0 *
          * NUMBER OF ELEMENTS TO BE CHANGED ----      0 *
          * ADDITIONAL BOUNDARY CONDITIONS ------     31 *



 * * * BOUNDARY CONDITIONS * * *
  (FORCES = LBS; DISPLACEMENTS = INCHES; ROTATIONS = DEGREES)

  BOUNDARY      LOAD      X-FORCE     OR      Y-FORCE     OR      X-Y ROTATION
BEAM ROTATIONAL
     NODE       STEP      X-DISPLACEMENT      Y-DISPLACEMENT
BOUNDARY CONDITIONS

      229         9    F =   0.0000E+00    F =  -0.8925E+02      0.0000E+00
     F
      229        10    F =   0.0000E+00    F =  -0.8925E+02      0.0000E+00
     F
      229        11    F =   0.0000E+00    F =  -0.8925E+02      0.0000E+00
     F
      229        12    F =   0.0000E+00    F =  -0.8925E+02      0.0000E+00
     F
      229         9    F =   0.0000E+00    F =  -0.8925E+02      0.0000E+00
     F
      229        10    F =   0.0000E+00    F =  -0.8925E+02      0.0000E+00
     F
      229        11    F =   0.0000E+00    F =  -0.8925E+02      0.0000E+00
     F
      229        12    F =   0.0000E+00    F =  -0.8925E+02      0.0000E+00
     F
      224         9    F =   0.0000E+00    F =  -0.4800E+01      0.0000E+00
     F
      225         9    F =   0.0000E+00    F =  -0.9600E+01      0.0000E+00
     F
      226         9    F =   0.0000E+00    F =  -0.9600E+01      0.0000E+00
     F
      227         9    F =   0.0000E+00    F =  -0.9600E+01      0.0000E+00
     F
      228         9    F =   0.0000E+00    F =  -0.9600E+01      0.0000E+00
     F
      229         9    F =   0.0000E+00    F =  -0.9600E+01      0.0000E+00
     F
      230         9    F =   0.0000E+00    F =  -0.9600E+01      0.0000E+00
```

28x10c2Mod.out

```
F
 231          9    F =   0.0000E+00    F =  -0.9600E+01      0.0000E+00
F
 232          9    F =   0.0000E+00    F =  -0.9600E+01      0.0000E+00
F
 233          9    F =   0.0000E+00    F =  -0.9600E+01      0.0000E+00
F
 224         13    F =   0.0000E+00    F =  -0.2188E+01      0.0000E+00
F
 225         13    F =   0.0000E+00    F =  -0.4375E+01      0.0000E+00
F
 226         13    F =   0.0000E+00    F =  -0.4375E+01      0.0000E+00
F
 227         13    F =   0.0000E+00    F =  -0.4375E+01      0.0000E+00
F
 228         13    F =   0.0000E+00    F =  -0.4375E+01      0.0000E+00
F
 229         13    F =   0.0000E+00    F =  -0.4375E+01      0.0000E+00
F
 230         13    F =   0.0000E+00    F =  -0.4375E+01      0.0000E+00
F
 231         13    F =   0.0000E+00    F =  -0.4375E+01      0.0000E+00
F
 232         13    F =   0.0000E+00    F =  -0.4375E+01      0.0000E+00
F
 233         13    F =   0.0000E+00    F =  -0.4375E+01      0.0000E+00
F
 234         13    F =   0.0000E+00    F =  -0.4375E+01      0.0000E+00
F
 235         13    F =   0.0000E+00    F =  -0.4375E+01      0.0000E+00
F
 236         13    F =   0.0000E+00    F =  -0.4375E+01      0.0000E+00
F

* * * * * COMPLETED MESH GENERATION  * * * * *

New Level 2 arch mesh

CALCULATED KEY NUMBERS ...
  THE NUMBER OF DATA ERRORS IS-----------     0
  THE NUMBER OF SOIL MATERIALS IS--------     3
  THE NUMBER OF PIPE-TYPE GROUPS IS------     1
  THE NUMBER OF INTERFACE MATERIALS IS---    19
  BAND WIDTH ESTIMATE (MAX)--------------    88


* * * * MESH DATA HAS BEEN SAVED ON UNIT 14 * * * *


 BEAM-NODE SEQUENCE NUMBERS FOR EACH GROUP


    BEAM-ELEMENT GROUP NUMBER =    1

     BEAM-NODE       MESH-NODE      CONNECTED-GROUP-ELEMENTS
     SEQUENCE        NUMBER         FOREWARD-#     BACKWARD-#
         1             198              1              0
         2             194              2              1
         3             190              3              2
         4             167              4              3
```

5	164	5	4
6	161	6	5
7	158	7	6
8	138	8	7
9	136	9	8
10	134	10	9
11	132	11	10
12	130	12	11
13	128	13	12
14	118	14	13
15	115	15	14
16	109	16	15
17	103	17	16
18	97	18	17
19	91	19	18
20	80	0	19

```
MATERIAL DESCRIPTION FOR SOILS AND INTERFACE
(ALL DENSITY UNITS ARE pcf, ALL MODULUS UNITS ARE psi)

   PROPERTIES FOR MATERIAL  1   ********in site

        DENSITY =    0.14000E+03

        YOUNGS MODULUS= 0.5000E+04
        POISSONS RATIO= 0.3500E+00
        CONFINED MOD.= 0.8025E+04
        LATERAL COEFF.= 0.5385E+00

   PROPERTIES FOR MATERIAL  2   ********Footing

        DENSITY =    0.15000E+03

        YOUNGS MODULUS= 0.3122E+07
        POISSONS RATIO= 0.1700E+00
        CONFINED MOD.= 0.3356E+07
        LATERAL COEFF.= 0.2048E+00

   PROPERTIES FOR MATERIAL  3   ********SW95

        DENSITY =    0.14000E+03

   CONTROLS FOR DUNCAN SOIL MODEL
   WITH SELIG HYPERBOLIC BULK MODULUS FORMULATION

         LRFD STRESS CONTROL..........        0

         ENTERING ELEMENT RATIO.......      0.5000


   HYPERBOLIC STRESS-STRAIN PARAMETERS


         SOIL CLASSIFICATION ............SW95
```

28x10c2Mod.out

COHESION INTERCEPT C	0.0000
FRICTION ANGLE PHIO (DEG).....	48.0000
10-FOLD REDUCTION IN PHIO(DEG)..	8.0000
SCALED MODULUS NUMBER ZK	950.0000
MODULUS EXPONENT ZN	0.6000
FAILURE RATIO RF	0.7000
INIT. BULK MODULUS NUMBER BI....	74.8000
ULT. VOLUMETRIC STRAIN EU	0.0200

INTERFACE ELEMENT MATERIAL-GROUP PROPERTIES

MAT. NO.	NORMAL-ANGLE	COEF-FRICTION	TENSILE-RUPTURE	INITIAL-GAP
1	90.00	0.40000	10.00000	0.00000
2	88.11	0.40000	10.00000	0.00000
3	86.22	0.40000	10.00000	0.00000
4	84.32	0.40000	10.00000	0.00000
5	82.43	0.40000	10.00000	0.00000
6	80.54	0.40000	10.00000	0.00000
7	78.65	0.40000	10.00000	0.00000
8	76.76	0.40000	10.00000	0.00000
9	74.87	0.40000	10.00000	0.00000
10	72.97	0.40000	10.00000	0.00000
11	71.08	0.40000	10.00000	0.00000
12	69.19	0.40000	10.00000	0.00000
13	67.30	0.40000	10.00000	0.00000
14	65.41	0.40000	10.00000	0.00000
15	10.46	0.40000	10.00000	0.00000
16	5.11	0.40000	10.00000	0.00000
17	0.00	0.40000	10.00000	0.00000
18	0.00	0.40000	10.00000	0.00000
19	0.00	0.40000	10.00000	0.00000

LRFD TOTAL LOAD FACTORS PER LOAD STEP

LOAD STEP	LOAD FACTOR	USER COMMENT
1	1.310	Factor for load step #1
2	0.857	Factor for load step #2
3	0.857	Factor for load step #3
4	0.857	Factor for load step #4
5	1.365	Factor for load step #5
6	1.365	Factor for load step #6
7	1.365	Factor for load step #7

28x10c2Mod.out

8	1.365	Factor for load step #8
9	1.750	Factor for load step #9
10	1.750	Factor for load step #10
11	1.750	Factor for load step #11
12	1.750	Factor for load step #12
13	1.500	Factor for load step #13

+ +

SOLUTION OUTPUT RESULTS

+ +

FINITE ELEMENT OUTPUT FOR LOAD STEP 13

+ +

CONCRETE, FACTORED-EVALUATION FOR GROUP 1, LOAD-STEP 13

STRUCTURAL RESPONSES OF CONCRETE-GROUP 1, LOAD-STEP 13
COORDINATES, DISPLACEMENTS AND CRACK DEPTHS ARE INCHES
Y-BAR IS "NEUTRAL AXIS" LOCATION FROM INTERIOR, INCHES
PRESSURES ARE LB/IN**2
MOMENTS ARE IN-LB/IN
THRUST AND SHEAR ARE LB/IN

LOCAL NODE	X-COORD. Y-COORD.	X-DISP. Y-DISP.	N-PRES. S-PRES.	MOMENT THRUST	Y-BAR CRACK DEPTH
1	0.00	0.00000E+00	-0.47374E+01	0.26043E+05	0.66148E+01
	125.00	-0.19546E+01	-0.50011E-01	-0.16765E+04	0.60492E+01
2	13.42	-0.65542E-03	-0.42068E+01	0.25943E+05	0.66148E+01
	124.78	-0.19427E+01	-0.17457E+00	-0.16796E+04	0.60458E+01
3	26.80	0.25009E-03	-0.36761E+01	0.25674E+05	0.66148E+01
	124.11	-0.19073E+01	-0.29912E+00	-0.16840E+04	0.60382E+01
4	40.15	0.42660E-02	-0.33026E+01	0.25335E+05	0.66148E+01
	123.01	-0.18487E+01	0.63641E+00	-0.16835E+04	0.60301E+01
5	53.46	0.12893E-01	-0.90278E+01	0.24992E+05	0.66148E+01
	121.47	-0.17675E+01	0.32485E+01	-0.16603E+04	0.60234E+01
6	66.71	0.27560E-01	-0.20521E+02	0.23609E+05	0.65476E+01
	119.48	-0.16645E+01	0.61093E+01	-0.16040E+04	0.59931E+01

28x10c2Mod.out

7	79.89	0.49359E-01	-0.24033E+02	0.19097E+05	0.65930E+01
	117.06	-0.15421E+01	-0.68019E+00	-0.15812E+04	0.58905E+01
8	92.98	0.78499E-01	-0.26157E+02	0.10814E+05	0.65930E+01
	114.21	-0.14058E+01	-0.10419E+02	-0.16787E+04	0.50723E+01
9	105.97	0.11412E+00	-0.31364E+02	-0.15740E+04	0.40762E+01
	110.92	-0.12624E+01	-0.12511E+02	-0.18663E+04	0.23953E+01
10	118.85	0.15347E+00	-0.61101E+01	-0.18921E+05	0.30809E+01
	107.21	-0.11226E+01	-0.24174E+01	-0.20097E+04	0.67445E+01
11	131.59	0.19210E+00	-0.70884E+01	-0.36638E+05	0.34674E+01
	103.08	-0.10003E+01	-0.28162E+01	-0.20927E+04	0.82441E+01
12	144.19	0.22712E+00	-0.69311E+01	-0.54889E+05	0.40809E+01
	98.53	-0.90072E+00	-0.27630E+01	-0.21806E+04	0.10400E+02
13	156.64	0.25812E+00	-0.83971E+01	-0.73645E+05	0.45666E+01
	93.56	-0.82077E+00	-0.33704E+01	-0.22758E+04	0.13489E+02
14	168.91	0.28625E+00	-0.90609E+01	-0.93188E+05	0.57315E+01
	88.19	-0.75457E+00	-0.93371E+01	-0.25372E+04	0.19547E+02
15	171.76	0.34208E+00	-0.65126E+01	-0.81421E+05	0.47460E+01
	75.95	-0.74072E+00	-0.30765E+01	-0.27302E+04	0.12799E+02
16	173.47	0.38377E+00	-0.10412E+02	-0.67539E+05	0.38703E+01
	63.50	-0.73403E+00	-0.37712E+01	-0.26894E+04	0.92988E+01
17	174.00	0.39950E+00	-0.13144E+02	-0.52142E+05	0.35078E+01
	50.94	-0.73224E+00	-0.61289E+00	-0.26534E+04	0.80947E+01
18	174.00	0.37388E+00	-0.90786E+01	-0.32748E+05	0.34814E+01
	33.96	-0.73064E+00	0.26185E+01	-0.26271E+04	0.77112E+01
19	174.00	0.31013E+00	-0.27935E+01	-0.15971E+05	0.36437E+01
	16.98	-0.72920E+00	0.79432E+00	-0.26158E+04	0.67913E+01
20	174.00	0.23123E+00	0.34915E+01	0.11892E-09	0.61687E+01
	0.00	-0.72828E+00	-0.10298E+01	-0.26200E+04	0.00000E+00

SHEAR FORCE DIAGNOSTCS FOR CONCRETE-GROUP 1, LOAD STEP 13
-- V-factor is coefficient of sqrt(PFPC) equal to capacity.
-- Shear depth "d" is negative if measured from outer wall.
-- Stirrup load is excess shear force above capacity.

NODE	EQUIVALENT V-factor	SHEAR CAPACITY lbs/inch	APPLIED SHEAR lbs/inch	APPLIED/ CAPACITY ratio	SHEAR DEPTH-d inches	STIRRUP LOAD lbs/inch
1	2.82	1815.85	1.09	0.001	8.00	0.00
2	2.82	1816.12	13.78	0.008	8.00	0.00
3	2.82	1816.48	22.71	0.013	8.00	0.00
4	2.82	1816.44	25.45	0.014	8.00	0.00
5	2.81	1814.50	64.40	0.035	8.00	0.00
6	2.81	1809.78	219.98	0.122	8.00	0.00
7	2.78	1809.78	477.46	0.264	8.06	0.00
8	4.50	2923.16	771.37	0.264	8.06	0.00

9	4.50	2764.55	1109.64	0.401	-7.63	0.00
10	3.96	2615.44	1308.53	0.500	-8.19	0.00
11	2.47	1968.84	1342.21	0.682	-9.88	0.00
12	1.91	1952.30	1380.92	0.707	-12.69	0.00
13	1.67	2249.47	1429.23	0.635	-16.69	0.00
14	1.45	2863.39	260.86	0.091	-24.56	0.00
15	1.72	2199.02	-1020.60	0.464	-15.88	0.00
16	2.09	1872.48	-1164.48	0.622	-11.13	0.00
17	2.31	1777.08	-1183.45	0.666	-9.56	0.00
18	2.36	1820.45	-1065.13	0.585	-9.56	0.00
19	3.86	2974.74	-964.34	0.324	-9.56	0.00
20	4.50	3625.40	-916.91	0.253	10.00	0.00

STRESS AND STRAIN MEASURES FOR CONCRETE-GROUP 1, LOAD STEP 13

NODE	MAXIMUM COMPRESSION psi	AVERAGE SHEAR psi	RADIAL TENSION psi	INNER-WALL STRAIN in/in	OUTER-WALL STRAIN in/in
1	-2420.29	0.14	8.44	0.8084E-03	-0.5114E-03
2	-2412.88	1.77	8.40	0.8049E-03	-0.5099E-03
3	-2391.02	2.92	8.33	0.7953E-03	-0.5053E-03
4	-2360.09	3.27	8.18	0.7827E-03	-0.4987E-03
5	-2324.29	8.28	8.05	0.7691E-03	-0.4912E-03
6	-2200.62	28.27	7.51	0.7205E-03	-0.4650E-03
7	-1755.70	60.87	5.67	0.5479E-03	-0.3710E-03
8	-1017.08	98.34	2.31	0.2386E-03	-0.2149E-03
9	-434.79	141.46	0.00	-0.9188E-04	0.2870E-04
10	-1943.77	155.66	0.00	-0.4107E-03	0.7413E-03
11	-2572.90	132.97	0.00	-0.5437E-03	0.1132E-02
12	-2525.63	107.00	0.00	-0.5337E-03	0.1207E-02
13	-2184.06	84.54	0.00	-0.4615E-03	0.1139E-02
14	-1554.23	10.53	0.00	-0.3284E-03	0.8977E-03
15	-2638.30	-63.41	0.00	-0.5575E-03	0.1327E-02
16	-3553.05	-102.65	0.00	-0.8092E-03	0.1796E-02
17	-3554.58	-120.99	0.00	-0.8098E-03	0.1709E-02
18	-2643.83	-108.90	0.00	-0.5587E-03	0.1032E-02
19	-1454.07	-98.59	0.00	-0.3073E-03	0.4237E-03
20	-196.30	-93.74	0.00	-0.4148E-04	-0.4148E-04

STEEL STRESS AND CRACK WIDTHS FOR CONCRETE-GROUP 1, LOAD STEP 13
NOTE: CRACK WIDTH IS REDUCED TO SERVICE-LOAD LEVEL.
ALL OTHER RESPONSES ARE AT FACTORED LOAD LEVEL.

NODE	INNER CAGE psi	OUTER CAGE psi	MAX STRESS TO YIELD ratio	CRACK WIDTH inches
1	17350.25	-6046.40	0.2892	0.00086
2	17270.33	-6036.02	0.2878	0.00082
3	17056.03	-5998.96	0.2843	0.00070
4	16776.73	-5939.24	0.2796	0.00055
5	16477.43	-5862.83	0.2746	0.00035
6	15404.78	-5610.53	0.2567	0.00000
7	11640.06	-4730.18	0.1940	0.00000
8	4731.21	-3348.39	0.0789	0.00000
9	-2164.26	-16.13	0.0361	0.00000
10	-6179.14	15200.72	0.2533	0.00000

28x10c2Mod.out

11	-8653.24	25500.07	0.4250	0.00013
12	-9674.20	29517.10	0.4920	0.00000
13	-9375.71	29783.46	0.4964	0.00000
14	-7572.17	25080.09	0.4180	0.00000
15	-11207.05	34303.87	0.5717	0.00000
16	-13543.74	42326.69	0.7054	0.00547
17	-12427.97	38166.37	0.6361	0.00484
18	-9352.93	22603.49	0.3767	0.00000
19	-5909.86	8769.83	0.1462	0.00000
20	-1321.96	-1321.96	0.0220	0.00000

ASSESSMENT SUMMARY CONCRETE-GROUP 1, LOAD-STEP 13

LRFD SUMMARY EVALUATION FOR GROUP 1, LOAD STEP 13

DESIGN-CRITERION	CONTROL NODE	FACTORED DEMAND	FACTORED CAPACITY	RATIO VALUE
STEEL YIELDING (psi)	16	42326.7	60000.0	0.705
CONCRETE CRUSHING (psi)	17	3554.6	4875.0	0.729
SHEAR FAILURE (lbs/in)	12	1380.9	1757.1	0.786
RADIAL-TENSION FAIL (psi)	1	8.4	69.6	0.121

LRFD SERVICE-LOAD PERFORMANCE MEASURES FOR GROUP 1, LOAD STEP 13

NODE NUMBER FOR MAXIMUM CRACK WIDTH 16

MAXIMUM CRACK WIDTH AT SERVICE LOAD (inches) 0.00547

LRFD RATIO: MAX-CRACK-WIDTH / ALLOWABLE 0.55

SPAN LENGTH FOR AUXILIARY EQUATIONS (inches)..... 348.00

* * * * NORMAL EXIT FROM CANDE * * * *

28x10c3Mod.out

```
*** WELCOME TO CANDE-2013(version 3/1/2013) ***

MASTER CONTROL AND PIPE-TYPE DATA FOR PROBLEM #  1

        USER TITLE: 28x8C3

        EXECUTION MODE ..................   ANALYS

        SOLUTION LEVEL ..................  #2 AUTO

        METHODOLOGY (LRFD OR SERVICE) ...     LRFD

        NUMBER OF PIPE-ELEMENT GROUPS ....       1

        MAXIMUM ITERATIONS PER STEP ......      30


        CULVERT PIPE-TYPE ............... CONCRETE

        CANNED MESH CODE # ..............        3

        NUMBER OF BEAM ELEMENTS .........       19

        CONCRETE MATERIAL PROPERTIES ARE AS FOLLOWS

             COMPRESSION STRENGTH (psi)..........       6500.000

             ELASTIC YOUNGS MODULUS (psi)........    4595487.000

             POISSON RATIO ......................          0.170

             CONCRETE DENSITY (pcf) .............        150.000

             INITIAL TENSILE CRACKING STRAIN.....       0.000010

             INITIAL COMPRESSION YIELD STRAIN....       0.000687

             INITIAL COMPRESSION CRUSH STRAIN ...       0.002000

             SHEAR STRENGTH MODEL (NSHEAR) # ...          1
             (VARIABLE STRENGTH MODEL PRINTED IN OUTPUT)

             CONCRETE CRACK-WIDTH MODEL NAME.....   HEGER-McGRATH
             (DRIVEN BY TENSILE STRAIN IN STEEL)

        STEEL REINFORCEMENT MATERIAL PROPERTIES

             TYPE OF STEEL CAGES (RSHAPE) .......     ARBIT

             STEEL YIELD STRENGTH (psi)..........      60000.000

             STEEL ELASTIC MODULUS (psi).........   29000000.000
```

28x10c3Mod.out

STEEL POISSON RATIO 0.300000

STEEL YIELDING STRAIN 0.001883

NONLINEAR MODELING CODE (1,2,3) 3

STEEL-BASED CRACKWIDTH PREDICTION PARAMETERS

REBAR SPACING INNER ROW (SLI), (in)	4.00
REBAR SPACING OUTER ROW (SLO), (in)	4.00
NUMBER OF STEEL LAYERS FOR INNER CAGE	1
NUMBER OF STEEL LAYERS FOR OUTER CAGE	1
HEGER-MCGRATH CODE NUMBER FOR STEEL TYPE..	3

WALL THICKNESS, REBAR AREAS AND COVER DEPTHS

WALL-THICK	INNER-REBAR	OUTER-REBAR	INNER-COVER	OUTER COVER
10.0000	0.1980	0.0750	2.0000	2.4375
10.0000	0.1980	0.0750	2.0000	2.4375
10.0000	0.1980	0.0750	2.0000	2.4375
10.0000	0.1980	0.0750	2.0000	2.4375
10.0000	0.1980	0.0750	2.0000	2.4375
10.0000	0.1980	0.0750	2.0000	2.4375
10.0630	0.1980	0.0750	2.0000	2.4375
10.0630	0.1980	0.0750	2.0000	2.4375
10.0630	0.1100	0.1500	2.0000	2.4375
10.6250	0.1100	0.1500	2.0000	2.4375
12.3130	0.1100	0.1500	2.0000	2.4375
15.1250	0.1100	0.1500	2.0000	2.4375
19.1250	0.1100	0.1500	2.0000	2.4375
27.0000	0.1100	0.1500	2.0000	2.4375
18.3130	0.1100	0.1500	2.0000	2.4375
13.5630	0.1100	0.1500	2.0000	2.4375
12.0000	0.1100	0.1500	2.0000	2.4375
12.0000	0.0500	0.1500	2.0000	2.4375
12.0000	0.0500	0.1500	2.0000	2.4375
12.0000	0.0500	0.1500	2.0000	2.4375

LRFD RESISTANCE FACTORS FOR STRENGTH-LIMIT STATES
AND CRACK-WIDTH LIMIT AT SERVICE LOAD

YIELDING OF REINFORCEMENT STEEL	1.000
CRUSHING OF CONCRETE OUTER FIBER.....	0.750
SHEARING FAILURE OF CONCRETE	0.900
SPLITTING OF CONCRETE IN RADIAL TENSION	0.900
ALLOWABLE CRACKWIDTH SERVICE LOAD (inch)....	0.010

LARGE DEFORMATION/BUCKLING CODE, IBUCK = 0
IBUCK=0, MEANS SMALL DEFORMATION THEORY FOR GROUP
AND NO BUCKLING PREDICTION.

28x10c3Mod.out

```
- - - - - - - - - - - - - - - - - - - - - - - - - - - - - - - - - - - - - - - -


 REVIEW SYSTEM INPUT DATA


 LEVEL-2 DATA FOR ARCH-TYPE CANNED MESH


    *** MESH PARAMETERS ***
     TYPE OF MESH ------------------------------------- TREN
     DEPTH OF TRENCH ABOVE FOOTING LEVEL (FT) ---------   12.42
     WIDTH OF TRENCH AT FOOTING LEVEL (FT) ------------    5.00
     SLOPE OF TRENCH WALL (H/V) -----------------------    0.00
     MESH SPACING PARAMETER ---------------------------    1.00
     TOTAL SOIL HEIGHT ABOVE CROWN (FT) ---------------    2.00
     MESH HEIGHT ABOVE CROWN (FT) ----------------------    2.00
     SOIL DENSITY ABOVE MESH (PCF) ---------------------  140.00
     NUMBER OF ELEMENT LAYERS ABOVE CROWN -------------    3


*** ARCH PARAMETERS ***
     CENTERLINE RISE OF ARCH (IN) ----------------------  125.00
     BOTTOM HALF SPAN OF ARCH (IN) ---------------------  174.00
     SIDE RISE OF ARCH ABOVE FOOTING (IN) -------------   50.94
     FOOTING DEPTH (IN) --------------------------------   24.00
     OUTSIDE FOOTING WIDTH (IN) ------------------------   30.00
     INSIDE FOOTING WIDTH (IN) -------------------------   30.00
     NUMBER OF ARCH SEGMENTS DEFINED -------------------    3

*** CURVED TOP SEGMENT ***
     RADIUS (IN) ---------------------------------------  405.88
     CENTRAL ANGLE (DEG) -------------------------------   24.59
     SEGMENT ARC LENGTH (IN) ---------------------------  174.19
     NUMBER OF BEAM ELEMENTS IN SEGMENT ----------------   13

*** CURVED CORNER SEGMENT ***
     RADIUS (IN) ---------------------------------------  133.94
     CENTRAL ANGLE (DEG) -------------------------------   16.14
     SEGMENT ARC LENGTH (IN) ---------------------------   37.73
     NUMBER OF BEAM ELEMENTS IN SEGMENT ----------------    3

*** STRAIGHT SIDE SEGMENT ***
     DEFLECTION ANGLE (DEG) ----------------------------   90.00
     SEGMENT LENGTH (IN) -------------------------------   50.94
     NUMBER OF BEAM ELEMENTS IN SEGMENT ----------------    3

 FINITE ELEMENT INPUT CONTROLS (PREP)


THE DATA TO BE RUN IS ENTITLED ...

New Level 2 arch mesh

PRINT AND PLOT CONTROL CODES ...
  PRINT CONTROL FOR MESH DATA------------    1
  PLOT FILE CONTROL MESH & RESULS--------    3
  PRINT FINITE ELEMENT RESULTS ----------    1
  INPUT DATA CHECK CODE------------------    0
                                   Page 3
```

28x10c3Mod.out

```
KEY NUMBERS DESCRIBING MESH ...
  THE NUMBER OF LOAD STEPS IS------------   13
  TOTAL NUMBER OF NODES IS---------------  244
  TOTAL NUMBER OF ELEMENTS IS------------  209
  TOTAL NUMBER OF BEAM ELEMENTS IS-------   19
  MAX NUMBER OF BOUNDARY CONDITIONS IS---   36


 EXTENDED LEVEL-2: CHANGES TO CANNED MESH

          * NUMBER OF NODES TO BE CHANGED -------      0 *
          * NUMBER OF ELEMENTS TO BE CHANGED ----      0 *
          * ADDITIONAL BOUNDARY CONDITIONS ------     31 *


* * * BOUNDARY CONDITIONS * * *
 (FORCES = LBS; DISPLACEMENTS = INCHES; ROTATIONS = DEGREES)

  BOUNDARY      LOAD      X-FORCE     OR      Y-FORCE     OR      X-Y ROTATION
BEAM ROTATIONAL
     NODE       STEP      X-DISPLACEMENT      Y-DISPLACEMENT
BOUNDARY CONDITIONS

      225         9    F =   0.0000E+00    F =  -0.6975E+02      0.0000E+00
     F
      225        10    F =   0.0000E+00    F =  -0.6975E+02      0.0000E+00
     F
      225        11    F =   0.0000E+00    F =  -0.6975E+02      0.0000E+00
     F
      225        12    F =   0.0000E+00    F =  -0.6975E+02      0.0000E+00
     F
      225         9    F =   0.0000E+00    F =  -0.6975E+02      0.0000E+00
     F
      225        10    F =   0.0000E+00    F =  -0.6975E+02      0.0000E+00
     F
      225        11    F =   0.0000E+00    F =  -0.6975E+02      0.0000E+00
     F
      225        12    F =   0.0000E+00    F =  -0.6975E+02      0.0000E+00
     F
      224         9    F =   0.0000E+00    F =  -0.4800E+01      0.0000E+00
     F
      225         9    F =   0.0000E+00    F =  -0.9600E+01      0.0000E+00
     F
      226         9    F =   0.0000E+00    F =  -0.9600E+01      0.0000E+00
     F
      227         9    F =   0.0000E+00    F =  -0.9600E+01      0.0000E+00
     F
      228         9    F =   0.0000E+00    F =  -0.9600E+01      0.0000E+00
     F
      229         9    F =   0.0000E+00    F =  -0.9600E+01      0.0000E+00
     F
      230         9    F =   0.0000E+00    F =  -0.9600E+01      0.0000E+00
```

28x10c3Mod.out

```
F
 231          9    F =   0.0000E+00    F =  -0.9600E+01      0.0000E+00
F
 232          9    F =   0.0000E+00    F =  -0.9600E+01      0.0000E+00
F
 233          9    F =   0.0000E+00    F =  -0.9600E+01      0.0000E+00
F
 224         13    F =   0.0000E+00    F =  -0.2188E+01      0.0000E+00
F
 225         13    F =   0.0000E+00    F =  -0.4375E+01      0.0000E+00
F
 226         13    F =   0.0000E+00    F =  -0.4375E+01      0.0000E+00
F
 227         13    F =   0.0000E+00    F =  -0.4375E+01      0.0000E+00
F
 228         13    F =   0.0000E+00    F =  -0.4375E+01      0.0000E+00
F
 229         13    F =   0.0000E+00    F =  -0.4375E+01      0.0000E+00
F
 230         13    F =   0.0000E+00    F =  -0.4375E+01      0.0000E+00
F
 231         13    F =   0.0000E+00    F =  -0.4375E+01      0.0000E+00
F
 232         13    F =   0.0000E+00    F =  -0.4375E+01      0.0000E+00
F
 233         13    F =   0.0000E+00    F =  -0.4375E+01      0.0000E+00
F
 234         13    F =   0.0000E+00    F =  -0.4375E+01      0.0000E+00
F
 235         13    F =   0.0000E+00    F =  -0.4375E+01      0.0000E+00
F
 236         13    F =   0.0000E+00    F =  -0.4375E+01      0.0000E+00
F

* * * * * COMPLETED MESH GENERATION  * * * * *

New Level 2 arch mesh

CALCULATED KEY NUMBERS ...
  THE NUMBER OF DATA ERRORS IS-----------     0
  THE NUMBER OF SOIL MATERIALS IS--------     3
  THE NUMBER OF PIPE-TYPE GROUPS IS------     1
  THE NUMBER OF INTERFACE MATERIALS IS---    19
  BAND WIDTH ESTIMATE (MAX)--------------    88


* * * * MESH DATA HAS BEEN SAVED ON UNIT 14 * * * *


 BEAM-NODE SEQUENCE NUMBERS FOR EACH GROUP


    BEAM-ELEMENT GROUP NUMBER =     1

     BEAM-NODE       MESH-NODE      CONNECTED-GROUP-ELEMENTS
     SEQUENCE        NUMBER         FOREWARD-#     BACKWARD-#
         1             198              1              0
         2             194              2              1
         3             190              3              2
         4             167              4              3
```

5	164	5	4
6	161	6	5
7	158	7	6
8	138	8	7
9	136	9	8
10	134	10	9
11	132	11	10
12	130	12	11
13	128	13	12
14	118	14	13
15	115	15	14
16	109	16	15
17	103	17	16
18	97	18	17
19	91	19	18
20	80	0	19

```
MATERIAL DESCRIPTION FOR SOILS AND INTERFACE
(ALL DENSITY UNITS ARE pcf, ALL MODULUS UNITS ARE psi)

   PROPERTIES FOR MATERIAL  1   ********in site

        DENSITY =     0.14000E+03

        YOUNGS MODULUS= 0.5000E+04
        POISSONS RATIO= 0.3500E+00
        CONFINED MOD.= 0.8025E+04
        LATERAL COEFF.= 0.5385E+00

   PROPERTIES FOR MATERIAL  2   ********Footing

        DENSITY =     0.15000E+03

        YOUNGS MODULUS= 0.3122E+07
        POISSONS RATIO= 0.1700E+00
        CONFINED MOD.= 0.3356E+07
        LATERAL COEFF.= 0.2048E+00

   PROPERTIES FOR MATERIAL  3   ********SW95

        DENSITY =     0.14000E+03

   CONTROLS FOR DUNCAN SOIL MODEL
   WITH SELIG HYPERBOLIC BULK MODULUS FORMULATION

         LRFD STRESS CONTROL..........        0

         ENTERING ELEMENT RATIO.......       0.5000


   HYPERBOLIC STRESS-STRAIN PARAMETERS


         SOIL CLASSIFICATION ............SW95
```

28x10c3Mod.out

COHESION INTERCEPT C	0.0000
FRICTION ANGLE PHIO (DEG).....	48.0000
10-FOLD REDUCTION IN PHIO(DEG)..	8.0000
SCALED MODULUS NUMBER ZK	950.0000
MODULUS EXPONENT ZN	0.6000
FAILURE RATIO RF	0.7000
INIT. BULK MODULUS NUMBER BI....	74.8000
ULT. VOLUMETRIC STRAIN EU	0.0200

INTERFACE ELEMENT MATERIAL-GROUP PROPERTIES

MAT. NO.	NORMAL-ANGLE	COEF-FRICTION	TENSILE-RUPTURE	INITIAL-GAP
1	90.00	0.40000	10.00000	0.00000
2	88.11	0.40000	10.00000	0.00000
3	86.22	0.40000	10.00000	0.00000
4	84.32	0.40000	10.00000	0.00000
5	82.43	0.40000	10.00000	0.00000
6	80.54	0.40000	10.00000	0.00000
7	78.65	0.40000	10.00000	0.00000
8	76.76	0.40000	10.00000	0.00000
9	74.87	0.40000	10.00000	0.00000
10	72.97	0.40000	10.00000	0.00000
11	71.08	0.40000	10.00000	0.00000
12	69.19	0.40000	10.00000	0.00000
13	67.30	0.40000	10.00000	0.00000
14	65.41	0.40000	10.00000	0.00000
15	10.46	0.40000	10.00000	0.00000
16	5.11	0.40000	10.00000	0.00000
17	0.00	0.40000	10.00000	0.00000
18	0.00	0.40000	10.00000	0.00000
19	0.00	0.40000	10.00000	0.00000

LRFD TOTAL LOAD FACTORS PER LOAD STEP

LOAD STEP	LOAD FACTOR	USER COMMENT
1	1.310	Factor for load step #1
2	0.857	Factor for load step #2
3	0.857	Factor for load step #3
4	0.857	Factor for load step #4
5	1.365	Factor for load step #5
6	1.365	Factor for load step #6
7	1.365	Factor for load step #7

28x10c3Mod.out

8	1.365	Factor for load step #8
9	1.750	Factor for load step #9
10	1.750	Factor for load step #10
11	1.750	Factor for load step #11
12	1.750	Factor for load step #12
13	1.500	Factor for load step #13

\+ +

SOLUTION OUTPUT RESULTS

\+ +

FINITE ELEMENT OUTPUT FOR LOAD STEP 13

\+ +

CONCRETE, FACTORED-EVALUATION FOR GROUP 1, LOAD-STEP 13

STRUCTURAL RESPONSES OF CONCRETE-GROUP 1, LOAD-STEP 13
COORDINATES, DISPLACEMENTS AND CRACK DEPTHS ARE INCHES
Y-BAR IS "NEUTRAL AXIS" LOCATION FROM INTERIOR, INCHES
PRESSURES ARE LB/IN**2
MOMENTS ARE IN-LB/IN
THRUST AND SHEAR ARE LB/IN

LOCAL NODE	X-COORD. Y-COORD.	X-DISP. Y-DISP.	N-PRES. S-PRES.	MOMENT THRUST	Y-BAR CRACK DEPTH
1	0.00	0.00000E+00	-0.48614E+02	0.64245E+05	0.61714E+01
	125.00	-0.24763E+01	0.87728E+01	-0.15851E+04	0.62777E+01
2	13.42	-0.33249E-03	-0.35640E+02	0.61877E+05	0.61714E+01
	124.78	-0.24460E+01	-0.60027E-01	-0.15993E+04	0.62801E+01
3	26.80	0.31834E-02	-0.22665E+02	0.53660E+05	0.61714E+01
	124.11	-0.23584E+01	-0.88929E+01	-0.16787E+04	0.62861E+01
4	40.15	0.13609E-01	-0.13889E+02	0.41960E+05	0.65127E+01
	123.01	-0.22216E+01	-0.54734E+01	-0.18037E+04	0.62265E+01
5	53.46	0.32929E-01	-0.53960E+01	0.28409E+05	0.66148E+01
	121.47	-0.20473E+01	-0.20850E+01	-0.18882E+04	0.60333E+01
6	66.71	0.61818E-01	-0.26586E+00	0.14571E+05	0.65476E+01
	119.48	-0.18485E+01	-0.44301E-01	-0.19377E+04	0.54881E+01

28x10c3Mod.out

7	79.89	0.99631E-01	-0.42151E+01	0.13892E+04	0.48019E+01
	117.06	-0.16386E+01	-0.16348E+01	-0.19839E+04	0.00000E+00
8	92.98	0.14450E+00	-0.39220E+01	-0.11828E+05	0.24151E+01
	114.21	-0.14296E+01	-0.15264E+01	-0.20401E+04	0.67643E+01
9	105.97	0.19279E+00	-0.56397E+01	-0.24999E+05	0.29481E+01
	110.92	-0.12352E+01	-0.22219E+01	-0.21008E+04	0.65584E+01
10	118.85	0.23929E+00	-0.68003E+01	-0.38405E+05	0.31779E+01
	107.21	-0.10699E+01	-0.26942E+01	-0.21703E+04	0.71133E+01
11	131.59	0.28000E+00	-0.77849E+01	-0.52235E+05	0.35814E+01
	103.08	-0.94092E+00	-0.30963E+01	-0.22475E+04	0.83870E+01
12	144.19	0.31381E+00	-0.87109E+01	-0.66654E+05	0.40809E+01
	98.53	-0.84449E+00	-0.34607E+01	-0.23326E+04	0.10482E+02
13	156.64	0.34181E+00	-0.10478E+02	-0.81831E+05	0.45666E+01
	93.56	-0.77190E+00	-0.34341E+01	-0.24241E+04	0.13539E+02
14	168.91	0.36604E+00	-0.13092E+02	-0.98104E+05	0.57315E+01
	88.19	-0.71449E+00	-0.45469E+01	-0.25394E+04	0.19633E+02
15	171.76	0.41252E+00	-0.11521E+02	-0.83991E+05	0.44372E+01
	75.95	-0.70284E+00	-0.24065E+01	-0.25791E+04	0.12907E+02
16	173.47	0.44420E+00	-0.13999E+02	-0.68730E+05	0.38703E+01
	63.50	-0.69756E+00	-0.24810E+01	-0.25154E+04	0.93352E+01
17	174.00	0.44932E+00	-0.14716E+02	-0.52726E+05	0.35078E+01
	50.94	-0.69629E+00	0.66872E+00	-0.24573E+04	0.81325E+01
18	174.00	0.40880E+00	-0.94489E+01	-0.33048E+05	0.34814E+01
	33.96	-0.69482E+00	0.34104E+01	-0.24142E+04	0.77776E+01
19	174.00	0.32976E+00	-0.29845E+01	-0.16093E+05	0.36437E+01
	16.98	-0.69350E+00	0.87081E+00	-0.23955E+04	0.69204E+01
20	174.00	0.23546E+00	0.34799E+01	0.17894E-09	0.61687E+01
	0.00	-0.69267E+00	-0.16688E+01	-0.23984E+04	0.00000E+00

SHEAR FORCE DIAGNOSTCS FOR CONCRETE-GROUP 1, LOAD STEP 13
-- V-factor is coefficient of sqrt(PFPC) equal to capacity.
-- Shear depth "d" is negative if measured from outer wall.
-- Stirrup load is excess shear force above capacity.

NODE	EQUIVALENT V-factor	SHEAR CAPACITY lbs/inch	APPLIED SHEAR lbs/inch	APPLIED/ CAPACITY ratio	SHEAR DEPTH-d inches	STIRRUP LOAD lbs/inch
1	2.80	1808.20	-41.99	0.023	8.00	0.00
2	2.81	1809.39	394.89	0.218	8.00	0.00
3	2.82	1816.04	743.25	0.409	8.00	0.00
4	2.83	1826.52	942.25	0.516	8.00	0.00
5	2.84	1833.59	1022.05	0.557	8.00	0.00
6	4.44	2864.53	1008.31	0.352	8.00	0.00
7	4.50	2923.16	985.15	0.337	8.06	0.00
8	3.48	2141.20	984.69	0.460	-7.63	0.00

9	2.69	1652.27	991.77	0.600	-7.63	0.00
10	2.53	1670.58	1016.40	0.608	-8.19	0.00
11	2.22	1768.21	1054.16	0.596	-9.88	0.00
12	1.91	1952.21	1104.41	0.566	-12.69	0.00
13	1.67	2241.63	1173.62	0.524	-16.69	0.00
14	1.45	2863.50	45.44	0.016	-24.56	0.00
15	1.71	2190.58	-1168.82	0.534	-15.88	0.00
16	2.08	1861.55	-1243.45	0.668	-11.13	0.00
17	2.29	1764.01	-1215.94	0.689	-9.56	0.00
18	2.33	1797.74	-1078.74	0.600	-9.56	0.00
19	3.78	2914.16	-973.18	0.334	-9.56	0.00
20	4.50	3625.40	-922.51	0.254	10.00	0.00

STRESS AND STRAIN MEASURES FOR CONCRETE-GROUP 1, LOAD STEP 13

NODE	MAXIMUM COMPRESSION psi	AVERAGE SHEAR psi	RADIAL TENSION psi	INNER-WALL STRAIN in/in	OUTER-WALL STRAIN in/in
1	-4665.30	-5.40	22.77	0.2150E-02	-0.1259E-02
2	-4533.96	50.75	21.85	0.2062E-02	-0.1206E-02
3	-4081.32	95.52	18.71	0.1758E-02	-0.1023E-02
4	-3523.75	121.09	14.21	0.1342E-02	-0.7974E-03
5	-2642.67	131.35	9.15	0.8746E-03	-0.5584E-03
6	-1510.50	129.58	4.11	0.4104E-03	-0.3192E-03
7	-338.09	125.59	0.00	-0.2850E-05	-0.7144E-04
8	-1527.12	125.53	0.00	-0.3227E-03	0.6922E-03
9	-2746.57	126.43	0.00	-0.5804E-03	0.1115E-02
10	-3447.20	120.91	0.00	-0.7665E-03	0.1583E-02
11	-3417.80	104.43	0.00	-0.7546E-03	0.1643E-02
12	-3023.10	85.57	0.00	-0.6388E-03	0.1475E-02
13	-2411.20	69.42	0.00	-0.5095E-03	0.1269E-02
14	-1620.06	1.83	0.00	-0.3423E-03	0.9490E-03
15	-2676.96	-72.62	0.00	-0.5657E-03	0.1385E-02
16	-3571.92	-109.61	0.00	-0.8169E-03	0.1836E-02
17	-3557.63	-124.31	0.00	-0.8111E-03	0.1737E-02
18	-2626.51	-110.29	0.00	-0.5550E-03	0.1051E-02
19	-1428.54	-99.49	0.00	-0.3019E-03	0.4349E-03
20	-179.70	-94.31	0.00	-0.3797E-04	-0.3797E-04

STEEL STRESS AND CRACK WIDTHS FOR CONCRETE-GROUP 1, LOAD STEP 13
NOTE: CRACK WIDTH IS REDUCED TO SERVICE-LOAD LEVEL.
ALL OTHER RESPONSES ARE AT FACTORED LOAD LEVEL.

NODE	INNER CAGE psi	OUTER CAGE psi	MAX STRESS TO YIELD ratio	CRACK WIDTH inches
1	46779.72	-13636.50	0.7797	0.00976
2	44891.54	-13035.82	0.7482	0.00917
3	38299.37	-10991.71	0.6383	0.00713
4	29137.22	-8791.06	0.4856	0.00428
5	18737.49	-6664.97	0.3123	0.00103
6	8429.00	-4504.54	0.1405	0.00000
7	-525.29	-1747.30	0.0291	0.00000
8	-3855.58	14225.88	0.2371	0.00000
9	-7759.06	22441.56	0.3740	0.00000
10	-10333.26	33264.90	0.5544	0.00329

28x10c3Mod.out

11	-11634.69	37241.99	0.6207	0.00392
12	-11452.25	36139.44	0.6023	0.00214
13	-10310.03	33220.74	0.5537	0.00000
14	-7861.45	26528.43	0.4421	0.00000
15	-11239.60	35852.03	0.5975	0.00048
16	-13566.55	43308.79	0.7218	0.00579
17	-12316.23	38849.52	0.6475	0.00506
18	-9158.68	23091.23	0.3849	0.00000
19	-5706.93	9089.86	0.1515	0.00000
20	-1210.13	-1210.13	0.0202	0.00000

ASSESSMENT SUMMARY CONCRETE-GROUP 1, LOAD-STEP 13

LRFD SUMMARY EVALUATION FOR GROUP 1, LOAD STEP 13

DESIGN-CRITERION	CONTROL NODE	FACTORED DEMAND	FACTORED CAPACITY	RATIO VALUE
STEEL YIELDING (psi)	1	46779.7	60000.0	0.780
CONCRETE CRUSHING (psi)	1	4665.3	4875.0	0.957
SHEAR FAILURE (lbs/in)	17	1215.9	1587.6	0.766
RADIAL-TENSION FAIL (psi)	1	22.8	69.6	0.327

LRFD SERVICE-LOAD PERFORMANCE MEASURES FOR GROUP 1, LOAD STEP 13

NODE NUMBER FOR MAXIMUM CRACK WIDTH 1

MAXIMUM CRACK WIDTH AT SERVICE LOAD (inches) 0.00976

LRFD RATIO: MAX-CRACK-WIDTH / ALLOWABLE 0.98

SPAN LENGTH FOR AUXILIARY EQUATIONS (inches)..... 348.00

* * * * NORMAL EXIT FROM CANDE * * * *

28x10c4Mod.out

```
*** WELCOME TO CANDE-2013(version 3/1/2013) ***

MASTER CONTROL AND PIPE-TYPE DATA FOR PROBLEM #  1

        USER TITLE: 28x8C4

        EXECUTION MODE ..................   ANALYS

        SOLUTION LEVEL ..................  #2 AUTO

        METHODOLOGY (LRFD OR SERVICE) ...     LRFD

        NUMBER OF PIPE-ELEMENT GROUPS ....       1

        MAXIMUM ITERATIONS PER STEP ......      30


        CULVERT PIPE-TYPE ............... CONCRETE

        CANNED MESH CODE # ..............        3

        NUMBER OF BEAM ELEMENTS .........       19

        CONCRETE MATERIAL PROPERTIES ARE AS FOLLOWS

             COMPRESSION STRENGTH (psi)..........       6500.000

             ELASTIC YOUNGS MODULUS (psi)........    4595487.000

             POISSON RATIO ......................          0.170

             CONCRETE DENSITY (pcf) .............        150.000

             INITIAL TENSILE CRACKING STRAIN.....       0.000010

             INITIAL COMPRESSION YIELD STRAIN....       0.000687

             INITIAL COMPRESSION CRUSH STRAIN ...       0.002000

             SHEAR STRENGTH MODEL (NSHEAR) # ...          1
             (VARIABLE STRENGTH MODEL PRINTED IN OUTPUT)

             CONCRETE CRACK-WIDTH MODEL NAME.....   HEGER-McGRATH
             (DRIVEN BY TENSILE STRAIN IN STEEL)

        STEEL REINFORCEMENT MATERIAL PROPERTIES

             TYPE OF STEEL CAGES (RSHAPE) .......     ARBIT

             STEEL YIELD STRENGTH (psi)..........      60000.000

             STEEL ELASTIC MODULUS (psi).........   29000000.000
```

28x10c4Mod.out

STEEL POISSON RATIO 0.300000

STEEL YIELDING STRAIN 0.001883

NONLINEAR MODELING CODE (1,2,3) 3

STEEL-BASED CRACKWIDTH PREDICTION PARAMETERS

REBAR SPACING INNER ROW (SLI), (in)	4.00
REBAR SPACING OUTER ROW (SLO), (in)	4.00
NUMBER OF STEEL LAYERS FOR INNER CAGE	1
NUMBER OF STEEL LAYERS FOR OUTER CAGE	1
HEGER-MCGRATH CODE NUMBER FOR STEEL TYPE..	3

WALL THICKNESS, REBAR AREAS AND COVER DEPTHS

WALL-THICK	INNER-REBAR	OUTER-REBAR	INNER-COVER	OUTER COVER
10.0000	0.1980	0.0750	2.0000	2.4375
10.0000	0.1980	0.0750	2.0000	2.4375
10.0000	0.1980	0.0750	2.0000	2.4375
10.0000	0.1980	0.0750	2.0000	2.4375
10.0000	0.1980	0.0750	2.0000	2.4375
10.0000	0.1980	0.0750	2.0000	2.4375
10.0630	0.1980	0.0750	2.0000	2.4375
10.0630	0.1980	0.0750	2.0000	2.4375
10.0630	0.1100	0.1500	2.0000	2.4375
10.6250	0.1100	0.1500	2.0000	2.4375
12.3130	0.1100	0.1500	2.0000	2.4375
15.1250	0.1100	0.1500	2.0000	2.4375
19.1250	0.1100	0.1500	2.0000	2.4375
27.0000	0.1100	0.1500	2.0000	2.4375
18.3130	0.1100	0.1500	2.0000	2.4375
13.5630	0.1100	0.1500	2.0000	2.4375
12.0000	0.1100	0.1500	2.0000	2.4375
12.0000	0.0500	0.1500	2.0000	2.4375
12.0000	0.0500	0.1500	2.0000	2.4375
12.0000	0.0500	0.1500	2.0000	2.4375

LRFD RESISTANCE FACTORS FOR STRENGTH-LIMIT STATES
AND CRACK-WIDTH LIMIT AT SERVICE LOAD

YIELDING OF REINFORCEMENT STEEL	1.000
CRUSHING OF CONCRETE OUTER FIBER.....	0.750
SHEARING FAILURE OF CONCRETE	0.900
SPLITTING OF CONCRETE IN RADIAL TENSION	0.900
ALLOWABLE CRACKWIDTH SERVICE LOAD (inch)....	0.010

LARGE DEFORMATION/BUCKLING CODE, IBUCK = 0
IBUCK=0, MEANS SMALL DEFORMATION THEORY FOR GROUP
AND NO BUCKLING PREDICTION.

28x10c4Mod.out

```
- - - - - - - - - - - - - - - - - - - - - - - - - - - - - - - - - - - - - - - - - - - -


 REVIEW SYSTEM INPUT DATA


 LEVEL-2 DATA FOR ARCH-TYPE CANNED MESH


    *** MESH PARAMETERS ***
     TYPE OF MESH ------------------------------------- TREN
     DEPTH OF TRENCH ABOVE FOOTING LEVEL (FT) ---------   12.42
     WIDTH OF TRENCH AT FOOTING LEVEL (FT) ------------    5.00
     SLOPE OF TRENCH WALL (H/V) -----------------------    0.00
     MESH SPACING PARAMETER ---------------------------    1.00
     TOTAL SOIL HEIGHT ABOVE CROWN (FT) ---------------    2.00
     MESH HEIGHT ABOVE CROWN (FT) ---------------------    2.00
     SOIL DENSITY ABOVE MESH (PCF) --------------------  140.00
     NUMBER OF ELEMENT LAYERS ABOVE CROWN -------------    3


*** ARCH PARAMETERS ***
     CENTERLINE RISE OF ARCH (IN) ---------------------  125.00
     BOTTOM HALF SPAN OF ARCH (IN) --------------------  174.00
     SIDE RISE OF ARCH ABOVE FOOTING (IN) -------------   50.94
     FOOTING DEPTH (IN) -------------------------------   24.00
     OUTSIDE FOOTING WIDTH (IN) -----------------------   30.00
     INSIDE FOOTING WIDTH (IN) ------------------------   30.00
     NUMBER OF ARCH SEGMENTS DEFINED ------------------    3

*** CURVED TOP SEGMENT ***
     RADIUS (IN) --------------------------------------  405.88
     CENTRAL ANGLE (DEG) ------------------------------   24.59
     SEGMENT ARC LENGTH (IN) --------------------------  174.19
     NUMBER OF BEAM ELEMENTS IN SEGMENT ---------------   13

*** CURVED CORNER SEGMENT ***
     RADIUS (IN) --------------------------------------  133.94
     CENTRAL ANGLE (DEG) ------------------------------   16.14
     SEGMENT ARC LENGTH (IN) --------------------------   37.73
     NUMBER OF BEAM ELEMENTS IN SEGMENT ---------------    3

*** STRAIGHT SIDE SEGMENT ***
     DEFLECTION ANGLE (DEG) ---------------------------   90.00
     SEGMENT LENGTH (IN) ------------------------------   50.94
     NUMBER OF BEAM ELEMENTS IN SEGMENT ---------------    3

 FINITE ELEMENT INPUT CONTROLS (PREP)


THE DATA TO BE RUN IS ENTITLED ...

New Level 2 arch mesh

PRINT AND PLOT CONTROL CODES ...
  PRINT CONTROL FOR MESH DATA------------    1
  PLOT FILE CONTROL MESH & RESULS--------    3
  PRINT FINITE ELEMENT RESULTS ----------    1
  INPUT DATA CHECK CODE------------------    0
                                    Page 3
```

5	164	5	4
6	161	6	5
7	158	7	6
8	138	8	7
9	136	9	8
10	134	10	9
11	132	11	10
12	130	12	11
13	128	13	12
14	118	14	13
15	115	15	14
16	109	16	15
17	103	17	16
18	97	18	17
19	91	19	18
20	80	0	19

```
MATERIAL DESCRIPTION FOR SOILS AND INTERFACE
(ALL DENSITY UNITS ARE pcf, ALL MODULUS UNITS ARE psi)

   PROPERTIES FOR MATERIAL  1   ********in site

        DENSITY =    0.14000E+03

        YOUNGS MODULUS= 0.5000E+04
        POISSONS RATIO= 0.3500E+00
        CONFINED MOD.= 0.8025E+04
        LATERAL COEFF.= 0.5385E+00

   PROPERTIES FOR MATERIAL  2   ********Footing

        DENSITY =    0.15000E+03

        YOUNGS MODULUS= 0.3122E+07
        POISSONS RATIO= 0.1700E+00
        CONFINED MOD.= 0.3356E+07
        LATERAL COEFF.= 0.2048E+00

   PROPERTIES FOR MATERIAL  3   ********SW95

        DENSITY =    0.14000E+03

   CONTROLS FOR DUNCAN SOIL MODEL
   WITH SELIG HYPERBOLIC BULK MODULUS FORMULATION

         LRFD STRESS CONTROL..........       0

         ENTERING ELEMENT RATIO.......      0.5000


   HYPERBOLIC STRESS-STRAIN PARAMETERS


         SOIL CLASSIFICATION ............SW95
```

28x10c4Mod.out

COHESION INTERCEPT C	0.0000
FRICTION ANGLE PHIO (DEG).....	48.0000
10-FOLD REDUCTION IN PHIO(DEG)..	8.0000
SCALED MODULUS NUMBER ZK	950.0000
MODULUS EXPONENT ZN	0.6000
FAILURE RATIO RF	0.7000
INIT. BULK MODULUS NUMBER BI....	74.8000
ULT. VOLUMETRIC STRAIN EU	0.0200

INTERFACE ELEMENT MATERIAL-GROUP PROPERTIES

MAT. NO.	NORMAL-ANGLE	COEF-FRICTION	TENSILE-RUPTURE	INITIAL-GAP
1	90.00	0.40000	10.00000	0.00000
2	88.11	0.40000	10.00000	0.00000
3	86.22	0.40000	10.00000	0.00000
4	84.32	0.40000	10.00000	0.00000
5	82.43	0.40000	10.00000	0.00000
6	80.54	0.40000	10.00000	0.00000
7	78.65	0.40000	10.00000	0.00000
8	76.76	0.40000	10.00000	0.00000
9	74.87	0.40000	10.00000	0.00000
10	72.97	0.40000	10.00000	0.00000
11	71.08	0.40000	10.00000	0.00000
12	69.19	0.40000	10.00000	0.00000
13	67.30	0.40000	10.00000	0.00000
14	65.41	0.40000	10.00000	0.00000
15	10.46	0.40000	10.00000	0.00000
16	5.11	0.40000	10.00000	0.00000
17	0.00	0.40000	10.00000	0.00000
18	0.00	0.40000	10.00000	0.00000
19	0.00	0.40000	10.00000	0.00000

LRFD TOTAL LOAD FACTORS PER LOAD STEP

LOAD STEP	LOAD FACTOR	USER COMMENT
1	1.310	Factor for load step #1
2	0.857	Factor for load step #2
3	0.857	Factor for load step #3
4	0.857	Factor for load step #4
5	1.365	Factor for load step #5
6	1.365	Factor for load step #6
7	1.365	Factor for load step #7

28x10c4Mod.out

8	1.365	Factor for load step #8
9	1.750	Factor for load step #9
10	1.750	Factor for load step #10
11	1.750	Factor for load step #11
12	1.750	Factor for load step #12
13	1.500	Factor for load step #13

+ +

SOLUTION OUTPUT RESULTS

+ +

FINITE ELEMENT OUTPUT FOR LOAD STEP 13

+ +

CONCRETE, FACTORED-EVALUATION FOR GROUP 1, LOAD-STEP 13

STRUCTURAL RESPONSES OF CONCRETE-GROUP 1, LOAD-STEP 13
COORDINATES, DISPLACEMENTS AND CRACK DEPTHS ARE INCHES
Y-BAR IS "NEUTRAL AXIS" LOCATION FROM INTERIOR, INCHES
PRESSURES ARE LB/IN**2
MOMENTS ARE IN-LB/IN
THRUST AND SHEAR ARE LB/IN

LOCAL NODE	X-COORD. Y-COORD.	X-DISP. Y-DISP.	N-PRES. S-PRES.	MOMENT THRUST	Y-BAR CRACK DEPTH
1	0.00	0.00000E+00	-0.40651E+01	0.33737E+05	0.66148E+01
	125.00	-0.24479E+01	-0.11206E+01	-0.20941E+04	0.60832E+01
2	13.42	-0.81536E-03	-0.38218E+01	0.33748E+05	0.66148E+01
	124.78	-0.24325E+01	-0.28763E+00	-0.20982E+04	0.60823E+01
3	26.80	0.40014E-03	-0.35785E+01	0.33842E+05	0.66148E+01
	124.11	-0.23864E+01	0.54532E+00	-0.20968E+04	0.60838E+01
4	40.15	0.56848E-02	-0.82692E+01	0.34067E+05	0.66148E+01
	123.01	-0.23097E+01	0.29878E+01	-0.20741E+04	0.60913E+01
5	53.46	0.17092E-01	-0.18303E+02	0.33569E+05	0.66148E+01
	121.47	-0.22026E+01	0.46589E+01	-0.20266E+04	0.60906E+01
6	66.71	0.36545E-01	-0.22924E+02	0.30528E+05	0.66148E+01
	119.48	-0.20663E+01	-0.66589E+00	-0.20095E+04	0.60438E+01

28x10c4Mod.out

7	79.89	0.65327E-01	-0.29457E+02	0.24106E+05	0.65930E+01
	117.06	-0.19048E+01	-0.65247E+01	-0.20763E+04	0.58934E+01
8	92.98	0.10365E+00	-0.38245E+02	0.13157E+05	0.63124E+01
	114.21	-0.17253E+01	-0.15109E+02	-0.22517E+04	0.49571E+01
9	105.97	0.15028E+00	-0.18000E+02	-0.38132E+04	0.36457E+01
	110.92	-0.15374E+01	-0.62560E+01	-0.24373E+04	0.38214E+01
10	118.85	0.20157E+00	-0.30368E+02	-0.23090E+05	0.30809E+01
	107.21	-0.13553E+01	-0.12120E+02	-0.26126E+04	0.67149E+01
11	131.59	0.25209E+00	-0.86695E+01	-0.46826E+05	0.35557E+01
	103.08	-0.11953E+01	-0.34474E+01	-0.27773E+04	0.82380E+01
12	144.19	0.29813E+00	-0.91961E+01	-0.71077E+05	0.41455E+01
	98.53	-0.10643E+01	-0.36691E+01	-0.28903E+04	0.10405E+02
13	156.64	0.33902E+00	-0.94835E+01	-0.95926E+05	0.45666E+01
	93.56	-0.95880E+00	-0.38126E+01	-0.30094E+04	0.13504E+02
14	168.91	0.37623E+00	-0.10608E+02	-0.12143E+06	0.57315E+01
	88.19	-0.87120E+00	-0.10865E+02	-0.33235E+04	0.19598E+02
15	171.76	0.45025E+00	-0.10843E+02	-0.10563E+06	0.46669E+01
	75.95	-0.85280E+00	-0.32002E+01	-0.35443E+04	0.12838E+02
16	173.47	0.50587E+00	-0.14986E+02	-0.87449E+05	0.42621E+01
	63.50	-0.84386E+00	-0.29228E+01	-0.34671E+04	0.92669E+01
17	174.00	0.52749E+00	-0.16722E+02	-0.67555E+05	0.38541E+01
	50.94	-0.84148E+00	0.65968E-01	-0.33968E+04	0.80652E+01
18	174.00	0.49529E+00	-0.11636E+02	-0.42453E+05	0.36020E+01
	33.96	-0.83941E+00	0.39154E+01	-0.33471E+04	0.77351E+01
19	174.00	0.41327E+00	-0.36159E+01	-0.20705E+05	0.36437E+01
	16.98	-0.83755E+00	0.11234E+01	-0.33220E+04	0.68714E+01
20	174.00	0.31151E+00	0.44041E+01	0.10436E-09	0.61687E+01
	0.00	-0.83639E+00	-0.16687E+01	-0.33207E+04	0.00000E+00

SHEAR FORCE DIAGNOSTCS FOR CONCRETE-GROUP 1, LOAD STEP 13
-- V-factor is coefficient of sqrt(PFPC) equal to capacity.
-- Shear depth "d" is negative if measured from outer wall.
-- Stirrup load is excess shear force above capacity.

NODE	EQUIVALENT V-factor	SHEAR CAPACITY lbs/inch	APPLIED SHEAR lbs/inch	APPLIED/ CAPACITY ratio	SHEAR DEPTH-d inches	STIRRUP LOAD lbs/inch
1	2.87	1850.84	2.39	0.001	8.00	0.00
2	2.87	1851.19	-3.89	0.002	8.00	0.00
3	2.87	1851.07	-11.91	0.006	8.00	0.00
4	2.87	1849.16	10.18	0.006	8.00	0.00
5	2.86	1845.18	132.05	0.072	8.00	0.00
6	2.86	1843.75	353.14	0.192	8.00	0.00
7	2.85	1851.06	648.22	0.350	8.06	0.00
8	4.50	2923.16	1041.84	0.356	8.06	0.00

9	4.50	2764.55	1352.66	0.489	-7.63	0.00
10	4.10	2707.57	1605.15	0.593	-8.19	0.00
11	2.62	2086.56	1790.70	0.858	-9.88	0.00
12	1.99	2033.36	1832.17	0.901	-12.69	0.00
13	1.71	2307.27	1879.11	0.814	-16.69	0.00
14	1.47	2903.21	322.84	0.111	-24.56	0.00
15	1.75	2244.51	-1352.19	0.602	-15.88	0.00
16	2.14	1921.32	-1514.35	0.788	-11.13	0.00
17	2.37	1826.65	-1530.37	0.838	-9.56	0.00
18	2.42	1865.90	-1379.62	0.739	-9.56	0.00
19	3.95	3044.60	-1250.14	0.411	-9.56	0.00
20	4.50	3625.40	-1188.74	0.328	10.00	0.00

STRESS AND STRAIN MEASURES FOR CONCRETE-GROUP 1, LOAD STEP 13

NODE	MAXIMUM COMPRESSION psi	AVERAGE SHEAR psi	RADIAL TENSION psi	INNER-WALL STRAIN in/in	OUTER-WALL STRAIN in/in
1	-3122.37	0.31	10.98	0.1050E-02	-0.6598E-03
2	-3124.05	-0.50	10.99	0.1050E-02	-0.6602E-03
3	-3130.68	-1.53	11.06	0.1053E-02	-0.6616E-03
4	-3145.41	1.31	11.13	0.1061E-02	-0.6647E-03
5	-3090.96	16.97	10.96	0.1043E-02	-0.6532E-03
6	-2831.28	45.38	9.82	0.9393E-03	-0.5983E-03
7	-2243.82	82.64	7.17	0.6943E-03	-0.4742E-03
8	-1276.48	132.82	2.68	0.2816E-03	-0.2697E-03
9	-731.23	172.44	0.00	-0.1545E-03	0.9461E-04
10	-2401.00	190.95	0.00	-0.5074E-03	0.8985E-03
11	-3280.86	177.40	0.00	-0.6992E-03	0.1444E-02
12	-3266.70	141.96	0.00	-0.6935E-03	0.1561E-02
13	-2853.04	111.15	0.00	-0.6029E-03	0.1482E-02
14	-2029.85	13.03	0.00	-0.4289E-03	0.1172E-02
15	-3343.02	-84.02	0.00	-0.7244E-03	0.1732E-02
16	-4205.20	-133.49	0.00	-0.1073E-02	0.2346E-02
17	-4214.66	-156.46	0.00	-0.1077E-02	0.2237E-02
18	-3344.86	-141.05	0.00	-0.7251E-03	0.1343E-02
19	-1886.18	-127.81	0.00	-0.3986E-03	0.5574E-03
20	-248.80	-121.53	0.00	-0.5257E-04	-0.5257E-04

STEEL STRESS AND CRACK WIDTHS FOR CONCRETE-GROUP 1, LOAD STEP 13
NOTE: CRACK WIDTH IS REDUCED TO SERVICE-LOAD LEVEL.
ALL OTHER RESPONSES ARE AT FACTORED LOAD LEVEL.

NODE	INNER CAGE psi	OUTER CAGE psi	MAX STRESS TO YIELD ratio	CRACK WIDTH inches
1	22571.39	-7742.97	0.3762	0.00244
2	22572.22	-7750.58	0.3762	0.00242
3	22636.35	-7762.08	0.3773	0.00239
4	22823.26	-7774.13	0.3804	0.00238
5	22432.56	-7638.22	0.3739	0.00215
6	20133.57	-7122.73	0.3356	0.00131
7	14725.94	-6090.71	0.2454	0.00000
8	5481.73	-4340.28	0.0914	0.00000
9	-3346.40	1091.87	0.0558	0.00000
10	-7735.49	18355.37	0.3059	0.00000

28x10c4Mod.out

11	-11190.37	32492.37	0.5415	0.00239
12	-12600.70	38168.46	0.6361	0.00280
13	-12264.07	38767.72	0.6461	0.00078
14	-9890.16	32745.90	0.5458	0.00000
15	-14534.54	44780.49	0.7463	0.00337
16	-18122.86	55170.78	0.9195	0.00962
17	-16708.03	49842.37	0.8307	0.00861
18	-12122.16	29417.36	0.4903	0.00150
19	-7624.36	11575.49	0.1929	0.00000
20	-1675.46	-1675.46	0.0279	0.00000

ASSESSMENT SUMMARY CONCRETE-GROUP 1, LOAD-STEP 13

LRFD SUMMARY EVALUATION FOR GROUP 1, LOAD STEP 13

DESIGN-CRITERION	CONTROL NODE	FACTORED DEMAND	FACTORED CAPACITY	RATIO VALUE
STEEL YIELDING (psi)	16	55170.8	60000.0	0.920
CONCRETE CRUSHING (psi)	17	4214.7	4875.0	0.865
SHEAR FAILURE (lbs/in)	12	1832.2	1830.0	1.001
RADIAL-TENSION FAIL (psi)	4	11.1	69.6	0.160

LRFD SERVICE-LOAD PERFORMANCE MEASURES FOR GROUP 1, LOAD STEP 13

NODE NUMBER FOR MAXIMUM CRACK WIDTH 16

MAXIMUM CRACK WIDTH AT SERVICE LOAD (inches) 0.00962

LRFD RATIO: MAX-CRACK-WIDTH / ALLOWABLE 0.96

SPAN LENGTH FOR AUXILIARY EQUATIONS (inches)..... 348.00

* * * * NORMAL EXIT FROM CANDE * * * *

DELTA
ENGINEERS, ARCHITECTS, & LAND SURVEYORS
860 Hooper Road, Endwell, NY 13760
www.deltaengineers.com
Phone: (607) 231-6600
Fax: (607) 231-6650

JOB	2014.059.004		
DESCIPTION	28x10 Arch		
SHEET NO	OF	SCALE	
CALCULATED BY	YL	DATE	3/17/2014
CHECKED BY	SLV	DATE	3/20/14

Summary of Capacity Demand Ratio from CANDE

2' earth cover

Load Case #

	1	2	3	4
steel yeilding	0.627	0.705	0.78	0.92
concrete crushing	0.801	0.729	0.957	0.865
shear failure	0.616	0.786	0.766	1.001
radial tension failure	0.263	0.121	0.327	0.16
Max Crack Width/Allow	0.7	0.55	0.98	0.96

≃1.0. say ok

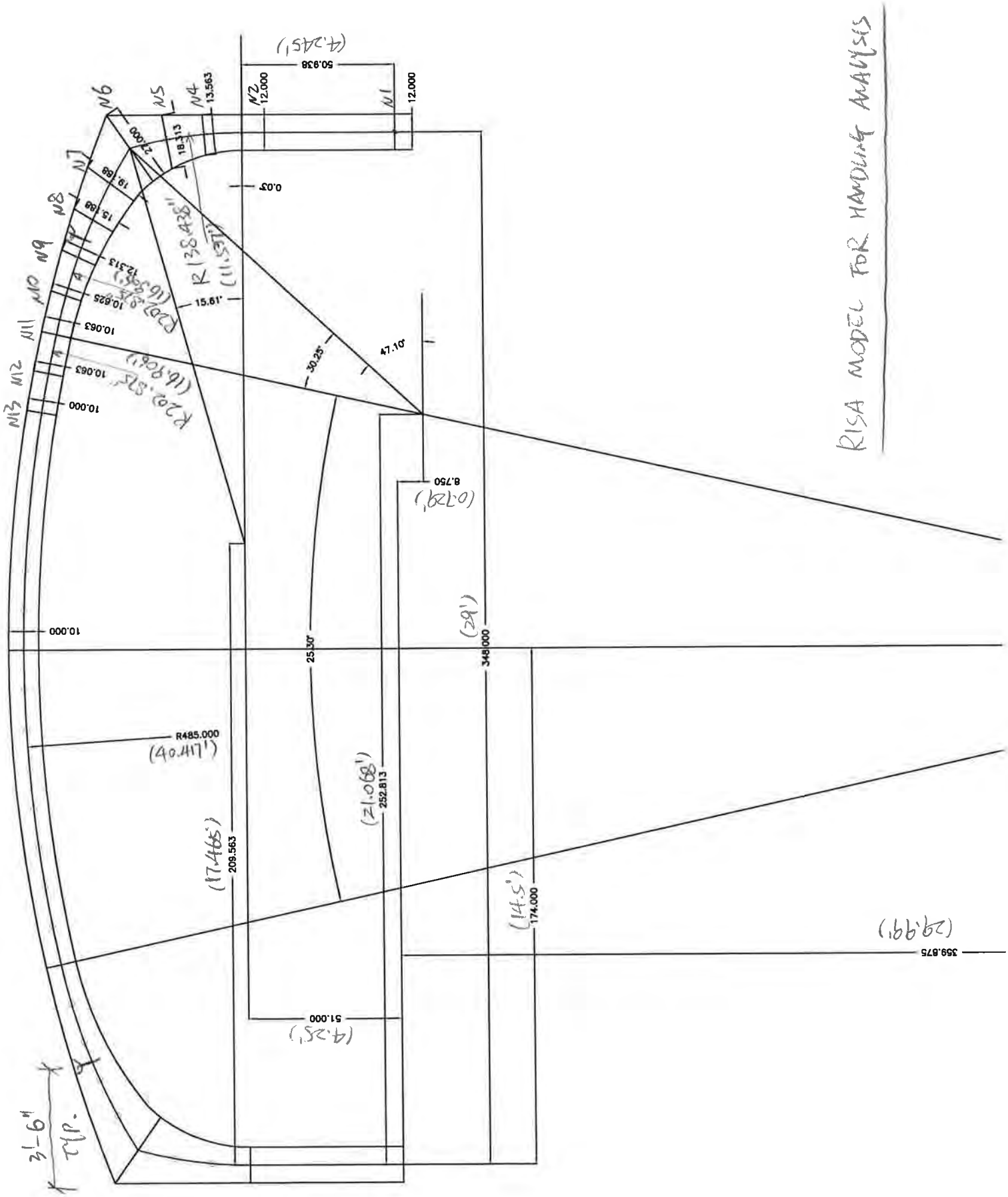
RISA MODEL FOR HANDLING ANALYSIS
N1
N2
N3
N4
N5
N6
N7
N8
N9
N10
N11
N12
N13
12.000
12.000
13.563
18.313
27.000
19.88
15.88
12.313
10.625
10.063
10.063
10.000
10.000
0.07
19.51'
30.25
47.10'
50.938
(4.245')
(11.537')
R 28.488'
(20.295')
(16.396')
R202.875'
(16.906')
8.750
(0.729')
25.30'
348.000
(29')
R485.000
(40.417')
252.813
(21.068')
209.563
(17.466')
174.000
(14.5')
359.875
(29.99')
51.000
(4.25')
3'-6"
TYP.

DELTA
ENGINEERS, ARCHITECTS, & LAND SURVEYORS
860 Hooper Road, Endwell, NY 13760
www.deltaengineers.com
Phone: (607) 231-6600
Fax: (607) 231-6650

JOB	2014.059.004		
DESCIPTION	28'x10' Arch		
SHEET NO.	OF	SCALE	
CALCULATED BY	YL	DATE	3/17/2014
CHECKED BY	SLV	DATE	3/21/14

Beam Information for Handling Analysis

fc'= 3500 psi

Nodes	Thickness(in)	Beam Thickness(in)	Beam No.	5fc^0.5S (k-ft/ft)
N13	10	10	M12	4.93
N12	10.063	10.03	M11	4.96
N11	10.063	10.06	M10	4.99
N10	10.625	10.34	M9	5.28
N9	12.313	11.47	M8	6.48
N8	15.188	13.75	M7	9.32
N7	19.188	17.19	M6	14.56
N6	27	23.09	M5	26.29
N5	18.313	22.66	M4	25.31
N4	13.563	15.94	M3	12.52
N2	12	12.78	M2	8.05
N1	12	12	M1	7.10

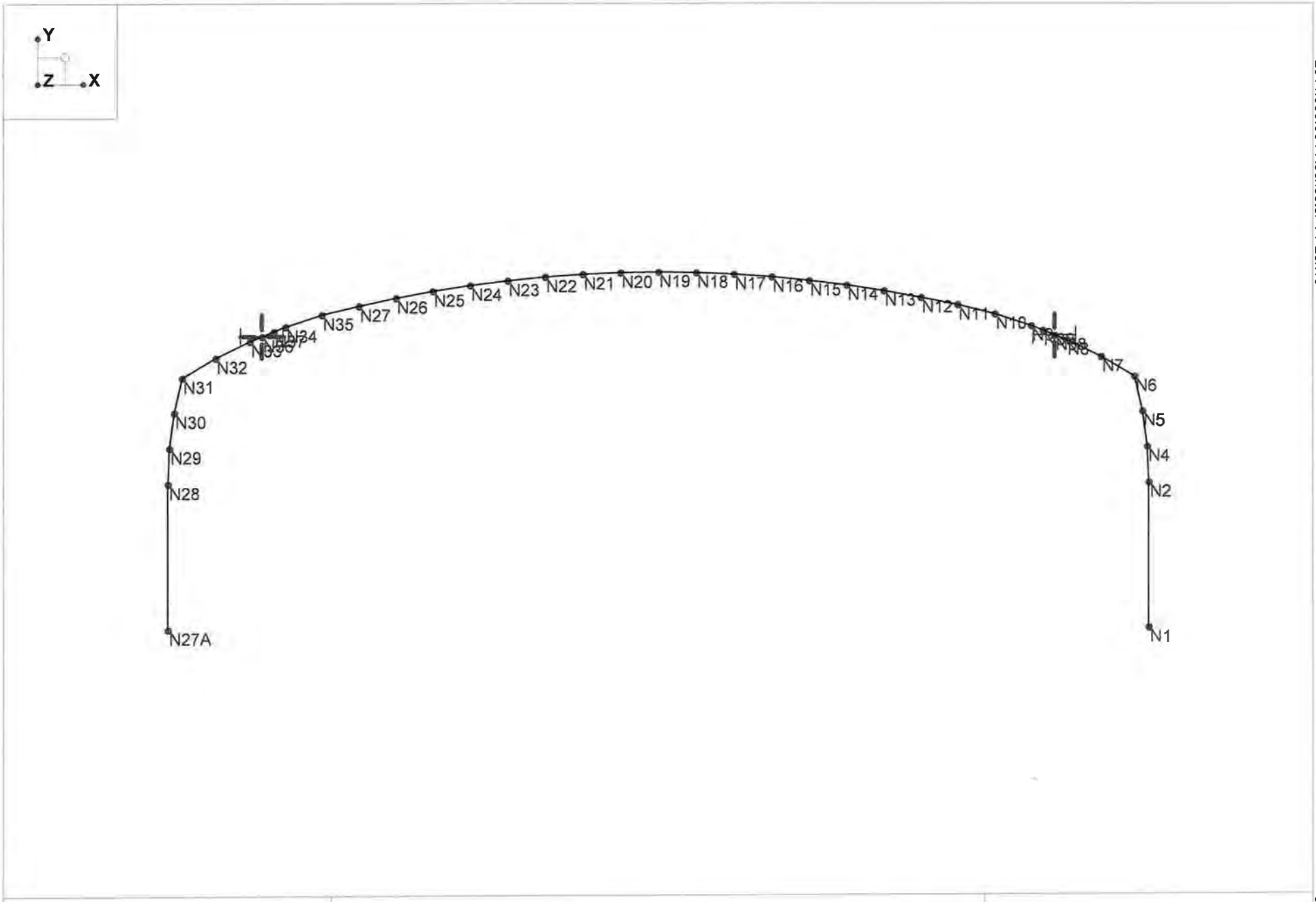

Delta Engineers, Inc	28'x10' Arch Handling	SK - 1
YL		Mar 17, 2014 at 11:01 AM
2014.059.004		28x10 Arch Handling.r3d

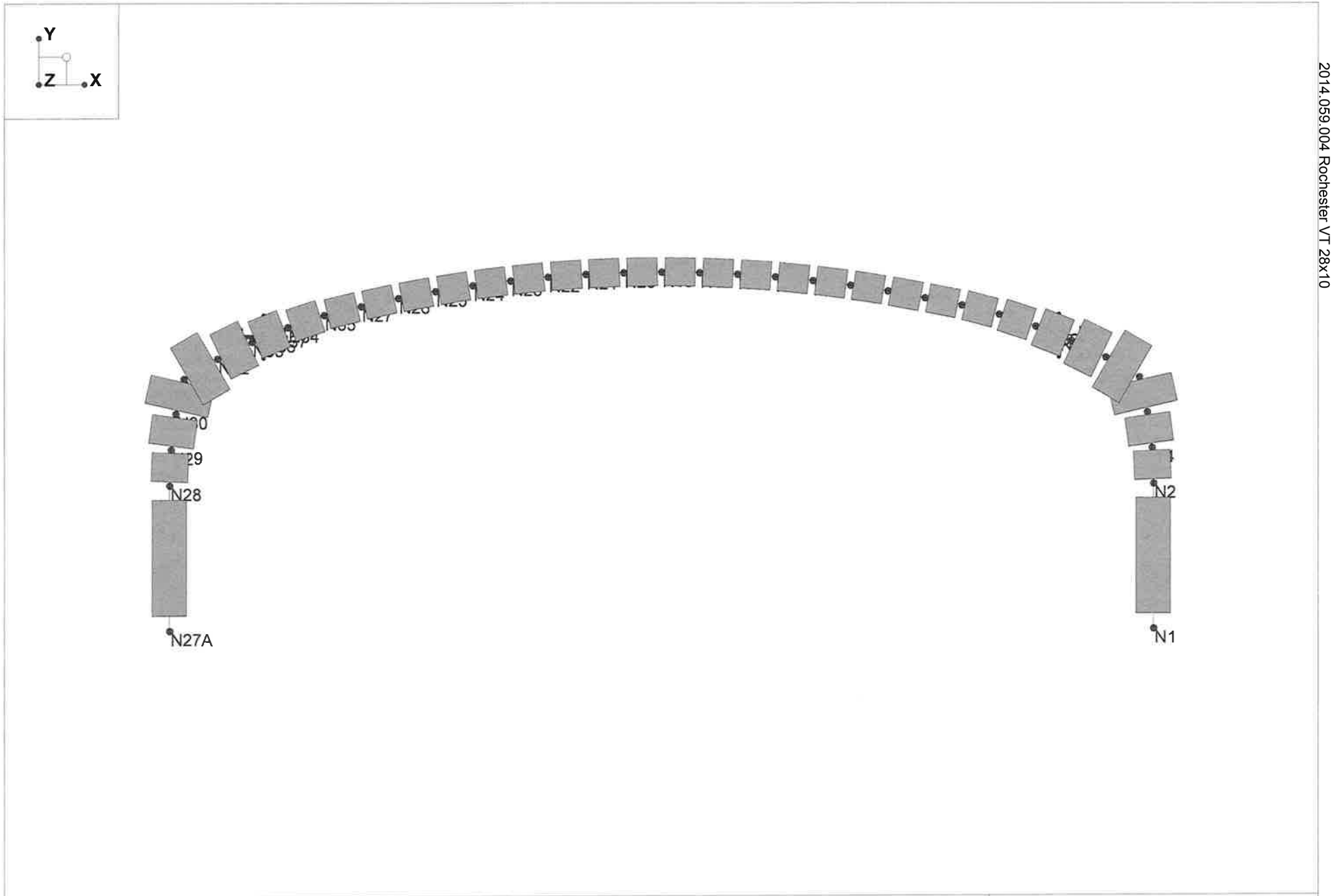

Delta Engineers, Inc	28'x10' Arch Handling	SK - 2
YL		Mar 17, 2014 at 11:01 AM
2014.059.004		28x10 Arch Handling.r3d

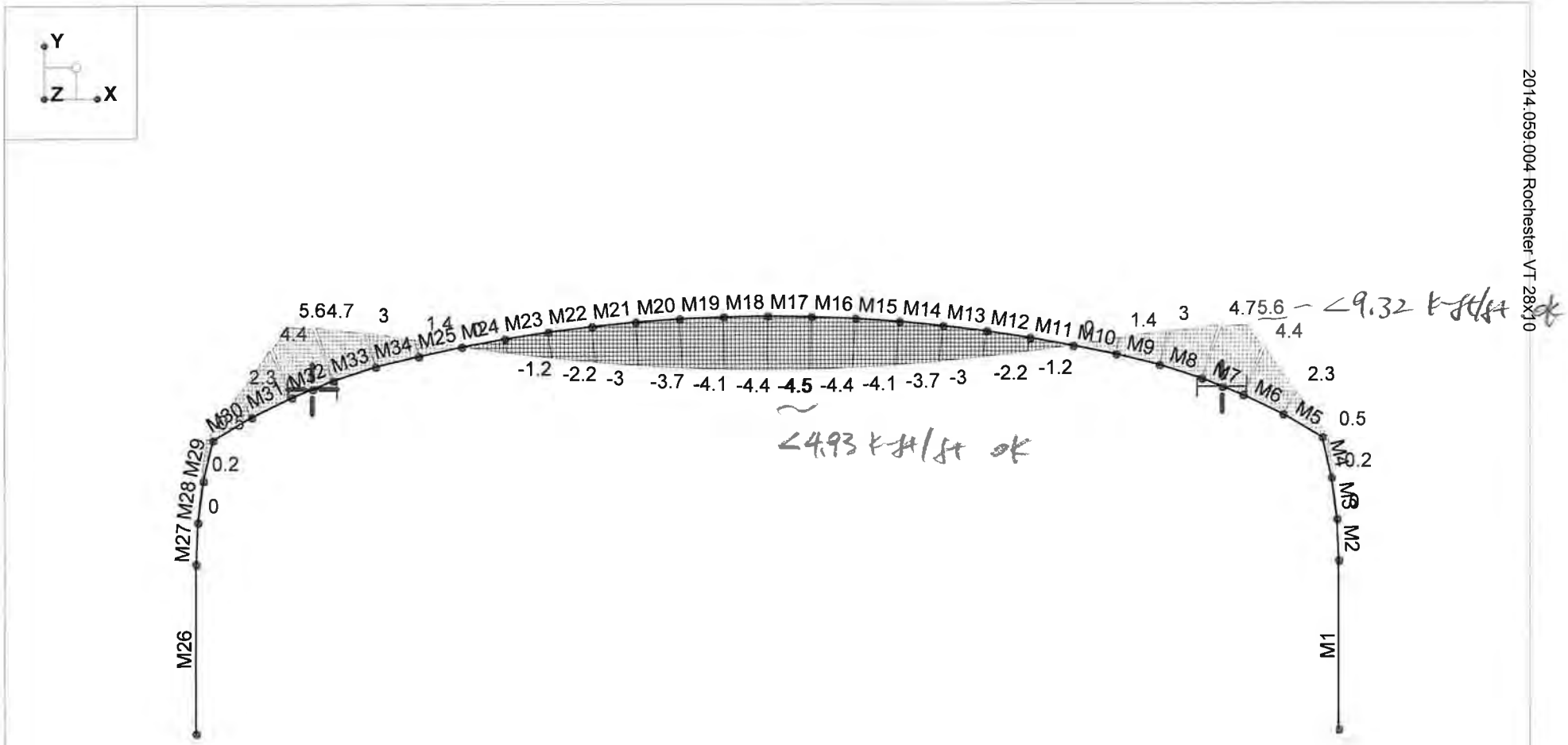

Results for LC 1, 1.2DL
Member z Bending Moments (k-ft)

Delta Engineers, Inc	28'x10' Arch Handling	SK - 3
YL		Mar 20, 2014 at 2:37 PM
2014.059.004		28x10 Arch Handling.r3d

Joint Coordinates and Temperatures

	Label	X [ft]	Y [ft]	Z [ft]	Temp [F]	Detach From Diap...
1	N1	29	0	0	0	
2	N2	29	4.245	0	0	
3	N4	28.955004	5.290281	0	0	
4	N5	28.813311	6.328028	0	0	
5	N6	28.578089	7.348649	0	0	
6	N7	27.592033	7.925352	0	0	
7	N8	26.572546	8.413852	0	0	
8	N9	25.522692	8.833126	0	0	
9	N10	24.447165	9.1813	0	0	
10	N11	23.350773	9.456816	0	0	
11	N12	22.259527	9.665144	0	0	
12	N13	21.162032	9.86416	0	0	
13	N14	20.059463	10.032815	0	0	
14	N15	18.95266	10.170981	0	0	
15	N16	17.842466	10.278553	0	0	
16	N17	16.729726	10.355448	0	0	
17	N18	15.615288	10.401609	0	0	
18	N19	14.5	10.417	0	0	
19	N20	13.384712	10.401609	0	0	
20	N21	12.270274	10.355448	0	0	
21	N22	11.157534	10.278553	0	0	
22	N23	10.04734	10.170981	0	0	
23	N24	8.940537	10.032815	0	0	
24	N25	7.837968	9.86416	0	0	
25	N26	6.740473	9.665144	0	0	
26	N27	5.648887	9.435919	0	0	
27	N27A	0	0	0	0	
28	N28	0	4.245	0	0	
29	N29	0.044996	5.290281	0	0	
30	N30	0.186689	6.328028	0	0	
31	N31	0.421911	7.348649	0	0	
32	N32	1.407967	7.925352	0	0	
33	N33	2.427454	8.413852	0	0	
34	N34	3.477308	8.833126	0	0	
35	N35	4.552835	9.1813	0	0	
36	N36	2.952381	8.623489	0	0	
37	N37	26.047619	8.623489	0	0	

Concrete Properties

	Label	E [ksi]	G [ksi]	Nu	Therm (\1E...	Density[k/ft...	f'c[ksi]	Lambda	Flex Steel[...	Shear Stee...
1	Conc3000NW	3156	1372	.15	.6	.15	3	1	60	60
2	Conc3500NW	3409	1482	.15	.6	.15	3.5	1	60	60
3	Conc4000NW	3644	1584	.15	.6	.15	4	1	60	60
4	Conc3000LW	2085	907	.15	.6	.11	3	.75	60	60
5	Conc3500LW	2252	979	.15	.6	.11	3.5	.75	60	60
6	Conc4000LW	2408	1047	.15	.6	.11	4	.75	60	60

Concrete Section Sets

	Label	Shape	Type	Design List	Material	Design Rules	A [in2]	Iyy [in4]	Izz [in4]	J [in4]
1	CONC1A	CRECT12X12	Beam	Rectangular	Conc3500NW	Typical	144	1728	1728	2557.44

Member Primary Data

	Label	I Joint	J Joint	K Joint	Rotate(d...	Section/Shape	Type	Design List	Material	Design Rul...
1	M1	N1	N2			CONC1A	Beam	Rectangular	Conc3500NW	Typical
2	M2	N2	N4			CRECT12.78X12	Beam	Rectangular	Conc3500NW	Typical
3	M3	N4	N5			CRECT15.94X12	Beam	Rectangular	Conc3500NW	Typical
4	M4	N5	N6			CRECT22.66X12	Beam	Rectangular	Conc3500NW	Typical
5	M5	N6	N7			CRECT23.09X12	Beam	Rectangular	Conc3500NW	Typical
6	M6	N7	N8			CRECT17.19X12	Beam	Rectangular	Conc3500NW	DR1
7	M7	N8	N9			CRECT13.75X12	Beam	Rectangular	Conc3500NW	Typical
8	M8	N9	N10			CRECT11.47X12	Beam	Rectangular	Conc3500NW	Typical
9	M9	N10	N11			CRECT10.34X12	Beam	Rectangular	Conc3500NW	Typical
10	M10	N11	N12			CRECT10.06X12	Beam	Rectangular	Conc3500NW	Typical
11	M11	N12	N13			CRECT10.03X12	Beam	Rectangular	Conc3500NW	Typical
12	M12	N13	N14			CRECT10X12	Beam	Rectangular	Conc3500NW	Typical
13	M13	N14	N15			CRECT10X12	Beam	Rectangular	Conc3500NW	Typical
14	M14	N15	N16			CRECT10X12	Beam	Rectangular	Conc3500NW	Typical
15	M15	N16	N17			CRECT10X12	Beam	Rectangular	Conc3500NW	Typical
16	M16	N17	N18			CRECT10X12	Beam	Rectangular	Conc3500NW	Typical
17	M17	N18	N19			CRECT10X12	Beam	Rectangular	Conc3500NW	Typical
18	M18	N19	N20			CRECT10X12	Beam	Rectangular	Conc3500NW	Typical
19	M19	N20	N21			CRECT10X12	Beam	Rectangular	Conc3500NW	Typical
20	M20	N21	N22			CRECT10X12	Beam	Rectangular	Conc3500NW	Typical
21	M21	N22	N23			CRECT10X12	Beam	Rectangular	Conc3500NW	Typical
22	M22	N23	N24			CRECT10X12	Beam	Rectangular	Conc3500NW	Typical
23	M23	N24	N25			CRECT10X12	Beam	Rectangular	Conc3500NW	Typical
24	M24	N25	N26			CRECT10.03X12	Beam	Rectangular	Conc3500NW	Typical
25	M25	N26	N27			CRECT10.06X12	Beam	Rectangular	Conc3500NW	Typical
26	M26	N27A	N28			CONC1A	Beam	Rectangular	Conc3500NW	Typical
27	M27	N28	N29			CRECT12.78X12	Beam	Rectangular	Conc3500NW	Typical
28	M28	N29	N30			CRECT15.94X12	Beam	Rectangular	Conc3500NW	Typical
29	M29	N30	N31			CRECT22.66X12	Beam	Rectangular	Conc3500NW	Typical
30	M30	N31	N32			CRECT23.09X12	Beam	Rectangular	Conc3500NW	Typical
31	M31	N32	N33			CRECT17.19X12	Beam	Rectangular	Conc3500NW	DR1
32	M32	N33	N34			CRECT13.75X12	Beam	Rectangular	Conc3500NW	Typical
33	M33	N34	N35			CRECT11.47X12	Beam	Rectangular	Conc3500NW	Typical
34	M34	N35	N27			CRECT10.34X12	Beam	Rectangular	Conc3500NW	Typical

Joint Boundary Conditions

	Joint Label	X [k/in]	Y [k/in]	Z [k/in]	X Rot.[k-ft/rad]	Y Rot.[k-ft/rad]	Z Rot.[k-ft/rad]	Footing
1	N35							
2	N10							
3	N33							
4	N8							
5	N34							
6	N9							
7	N36	Reaction	Reaction	Reaction	Fixed			
8	N37		Reaction	Reaction	Fixed			

Basic Load Cases

	BLC Description	Category	X Gravity	Y Gravity	Z Gravity	Joint	Point	Distributed	Area(Me...	Surface(P...
1	Self Weight	None		-1						

Load Combinations

	Description	So...	P...	S...	BLC	Fact..	BLC	Fact..	BLC	Fact..	BLC	Fact..	BLC	Fact..	BLC	Fact..	BLC	Fact..	BLC	Fact...
1	1.2DL	Yes			1	1.2														

Joint Reactions

	LC	Joint Label	X [k]	Y [k]	Z [k]	MX [k-ft]	MY [k-ft]	MZ [k-ft]
1	1	N36	0	4.2	0	NC	0	0
2	1	N37	0	4.201	0	NC	0	0
3	1	Totals:	0	8.401	0			
4	1	COG (ft):	X: 14.5	Y: 7.327	Z: 0			

LIFTER LOAD = 4.2 k/ft / 1.2 x 5.96'/2 = 10.43 k (SERVICE)

DELTA
ENGINEERS, ARCHITECTS, & LAND SURVEYORS
860 Hooper Road, Endwell, NY 13760
www.deltaengineers.com
Phone: (607) 231-6600
Fax: (607) 231-6650

JOB	2014.059.004		
DESCRIPTION	28'x10' ARCH		
SHEET NO.	OF	SCALE	
CALCULATED BY	YL	DATE	3/18/2014
CHECKED BY	SLW	DATE	3/24/14

AN ISO 9001:2008 CERTIFIED COMPANY

ANCHORED STYLE WINGWALL DESIGN

WW1 : (BROKEN BACK FILL. ASSUME 1/2 TO ~5', THEN LEVEL)

MAX. WINGWALL HT AT ANCHOR

WINGWALL 1A: 13.15'

WINGWALL 1B: 13.76'

WINGWALL 1C: 14.36'

USE 1 DESIGN (TYPE E ANCHOR)

WW2 : (LEVEL BACKFILL) 11.61'

WW3 : (USE LEVEL BACKFILL. SLOPE DOWN FROM WW)

WINGWALL 3A : 14.94'

WINGWALL 3B : 11.0'

WINGWALL 3C : 7.08'

5.11'

DESIGN FOR:

14.94' – TYPE D

11.61' – TYPE C

7.08' – TYPE B

AND CHECK FOR 5.11' – B w/ 10' TRIBUTARY WIDTH.

WW4 : (BROKEN BACKFILL, ASSUME 1/2 TO ~7', THEN LEVEL)

WINGWALL 4A : 9.02' – TYPE C

WINGWALL 4B : 6.42' – TYPE B

WINGWALL 4C : 3.81' – TYPE B

Project: 2014.059.004 BY: YL 3/19/2014
Anchored Wingwall - Wingwall 1 CHK: SW

Wingwall Stability Check:

Wall Height (high) =	14.50 ft	ϕ_{AB} =	34
Wall Height (low) =	12.85 ft	θ_{AB} =	90
Wall Length =	25.00 ft	δ_{AB} =	26
Unit Weight of Backfill, γ_{soil} =	140.00	$(Ka)_{AB}$ =	0.27
Unit Weight of Conc, γ_c =	150.00	ϕ_{BC} =	34
Broken Back slope β =	4.24 deg.	θ_{BC} =	120
Wall thickness =	10.00 in	δ_{BC} =	17
Bearing Resistance, ϕq_{ult} =	14100 psf	$(Ka)_{BC}$ =	0.09
Friction Coefficient μ =	0.54		

	Dist. To Anchor	Height at Anchor	Contributary width	Anchor type	Bearing Pressure	Stability Check
Anchor #1:	2.00 ft	14.36 ft	4.17 ft	E	5796	OK!
Anchor #2:	0.00 ft	0.00 ft	0.00 ft		NA	NA
Anchor #3:	0.00 ft	0.00 ft	0.00 ft		NA	NA
Anchor #4:	0.00 ft	0.00 ft	0.00 ft		NA	NA
Anchor #5:	0.00 ft	0.00 ft	0.00 ft		NA	NA

Distance from front of ftg. to front of wall, O = 0 in

Anchor Type Data

Anchor Type	Length at Bottom Anchor	Anchor End	Total	Length at Top Anchor	Anchor End	Total
	(in)	(in)	(in)	(in)	(in)	(in)
B	16	8.08	24.08	41.375	8.08	49.455
C	28	8.08	36.08	53.375	8.08	61.455
D	40	8.08	48.08	65.375	8.08	73.455
E	52	8.08	60.08	77.375	8.08	85.455

Project: 2014.059.004
Anchored Wingwall - Wingwall 1

BY: YL 3/19/2014
CHK: SLW

Anchor #1 Stability Check

Soil Properties:

Active Earth Coeff., $(Ka)_{AB}$ =	0.267
Active Earth Coeff., $(Ka)_{ABH}$ =	0.241
Active Earth Coeff., $(Ka)_{ABV}$ =	0.115
Active Earth Coeff., $(Ka)_{BC}$ =	0.092
Active Earth Coeff., $(Ka)_{BCH}$ =	0.088
Active Earth Coeff., $(Ka)_{BCV}$ =	0.027

Load Factors:

	(overturning & sliding)	(Bearing Pressure)
EH =	1.50	1.5
EV =	1.00	1.35
DC =	0.90	1.5
LS =	1.75	1.75

Modification Factor = 1.00

Overturning Check:

Anchor Height =	14.36	ft
Design Wall Height, H =	16.69	ft
Anchor Type =	E	
Anchor Length at Top, L_{top} =	7.12	ft
Anchor Length at Bot., $L_{bot.}$ =	5.01	ft

Back slope $\beta 1$ = 26.56 deg.

Soil Pressure:

Horizontal (kah) :

Soil Pressure at A, σ_{LL} =	0	psf
Soil Pressure at B, σ_{Bab} =	444.74	psf
Soil Pressure at B, σ_{Bbc} =	162.20	psf
Soil Pressure at C, σ_{BOT} =	211.39	psf

Vertical (kav) :

Soil Pressure at A, σ_{LL} =	0	psf
Soil Pressure at B, σ_{Bab} =	212.13	psf
Soil Pressure at B, σ_{Bbc} =	-49.59	psf
Soil Pressure at C, σ_{BOT} =	-64.63	psf

Driving Forces:

Force $P_{Surcharge}$ =	0	lb/ft
Moment Arm, y_1 =	8.35	ft
Overturning Moment, DM1 =	0	ft-lb/ft
Force P_{ABH} =	2933	lb/ft
Moment Arm, y_2 =	7.90	ft
Overturning Moment, DM2 =	23161	ft-lb/ft
Force P_{BC1H} =	649	lb/ft
Moment Arm, y_3 =	1.50	ft
Overturning Moment, DM3 =	973	ft-lb/ft
Force P_{BC2H} =	98	lb/ft
Moment Arm, y_4 =	0.83	ft
Overturning Moment, DM4 =	82	ft-lb/ft

Resisting Forces:

Weight of Wall, Ww =	1795	lb/ft
Dist. From PT. O, X_1 =	0.42	ft
Resisting Moment, RM1 =	748	ft-lb/ft
Backslope Soil, I_A =	12.68	lb/ft
Dist. From PT. O, X_2 =	5.58	ft
Resisting Moment, RM2 =	71	ft-lb/ft
Soil Above Anchor, I_B =	10827	lb/ft
Dist. From PT. O, X_3 =	4.39	ft
Resisting Moment, RM3 =	47574	ft-lb/ft
Weight of Soil, II_A =	2122	lb/ft
Dist. From PT. O, X_4 =	2.999	ft
Resisting Moment, RM4 =	6365	ft-lb/ft

Project: 2014.059.004
Anchored Wingwall - Wingwall 1

BY: YL 3/19/2014
CHK: SLV

Anchor #1 Stability Check

Resisting Forces (Con't):

Weight of Soil, II_B =	684	lb/ft
Dist. From PT. O, X_5 =	6.095	ft
Resisting Moment, RM5 =	4166	ft-lb/ft
Force P_{ABV} =	1399	lb/ft
Moment Arm, x6 =	7.95	ft
Resisting Moment, RM6 =	11128	ft-lb/ft
Force P_{BC1V} =	-198	lb/ft
Moment Arm, x7 =	6.56	ft
Resisting Moment, RM7 =	-1301	ft-lb/ft
Force P_{BC2V} =	-30	lb/ft
Moment Arm, x8 =	6.09	ft
Resisting Moment, RM8 =	-183	ft-lb/ft

Location of Resultant Force:

x = 1.498 ft (note: 80% of soil weight used for overturning resist.)

e = 1.42 ft

Overturning Check: $= \sum V / (B-2e)$ EQ. 11.6.3.2-1

Footing Length, B = 5.84

1/4 B = 1.46 > e OK!

Bearing Check:

Locate resultant for bearing (uses 100% soil weight)

x = 1.958

e = 0.96

Beff = 3.92 ft

Factored Bearing Pressure = 5796 psf

Bearing Resistance, ϕq_{ult} = 14100 > Bearing Pressure OK!

Sliding Check:

Factored Sliding Force = 5520 ft-lb/ft

Factored Vertical Loads = 16432 ft-lb/ft

Sliding Resistance = 8873 ft-lb/ft OK!

Project: 2014.059.004
Anchored Wingwall - Wingwall 1

BY: YL 3/19/2014
CHK: SLJ

Anchor #1 w/ Footing Stability Check

Soil Properties:

Active Earth Coeff., $(Ka)_{AB}$ =	0.267
Active Earth Coeff., $(Ka)_{ABH}$ =	0.241
Active Earth Coeff., $(Ka)_{ABV}$ =	0.115
Active Earth Coeff., $(Ka)_{BC}$ =	0.092
Active Earth Coeff., $(Ka)_{BCH}$ =	0.088
Active Earth Coeff., $(Ka)_{BCV}$ =	0.027

Load Factors:

	(overturning & sliding)	(Bearing Pressure)
EH =	1.50	1.5
EV =	1.00	1.35
DC =	0.90	1.5
LS =	1.75	1.75

Modification Factor = 1.00

Overturning Check:

Anchor Height =	14.36	ft
Design Wall Height, H =	16.69	ft
Anchor Type =	E	
Anchor Length at Top, L_{top} =	7.12	ft
Anchor Length at Bot., L_{bot} =	5.01	ft

Footing Information:

Toe =	1.08	ft
Footing Stem Width(thickness) =	10	in
Footing Heel =	1.08	ft
Footing Width =	2.99	ft
WW Stem Offset wrt Ftg Stem	0.00	in
FTG Stem Height =	0.00	ft
FTG Thickness =	23	in
Back slope β1 =	26.56	deg.

Soil Pressure:

Horizontal (kah) :

Soil Pressure at A, σ_{LL} =	0.00	psf
Soil Pressure at B, σ_{Bab} =	444.74	psf
Soil Pressure at B, σ_{Bbc} =	162.20	psf
Soil Pressure at C, σ_{BOT} =	211.39	psf
Soil Press. at top of ftg Stem =	562.75	psf
Soil Press. at Bottom of ftg =	627.38	psf

Vertical (kav) :

Soil Pressure at A, σ_{LL} =	0.00	psf
Soil Pressure at B, σ_{Bab} =	212.13	psf
Soil Pressure at B, σ_{Bbc} =	-49.59	psf
Soil Pressure at C, σ_{BOT} =	-64.63	psf
Soil Press. at top of ftg Stem =	268.42	psf
Soil Press. at Bottom of ftg =	299.24	psf

Driving Forces:

Force $P_{Surcharge}$ =	0	lb/ft
Moment Arm, y_1 =	9.30	ft
Overturning Moment, DM1 =	0	ft-lb/ft
Force P_{ABH} =	2933	lb/ft
Moment Arm, y_2 =	9.81	ft
Overturning Moment, DM2 =	28783	ft-lb/ft
Force P_{BC1H} =	649	lb/ft
Moment Arm, y_3 =	3.42	ft
Overturning Moment, DM3 =	2217	ft-lb/ft
Force P_{BC2H} =	98	lb/ft
Moment Arm, y_4 =	2.75	ft
Overturning Moment, DM4 =	271	ft-lb/ft

Resisting Forces:

Weight of Wall, Ww =	1795	lb/ft
Dist. From Ftg Toe, X_1 =	1.50	ft
Resisting Moment, RM1 =	2687	ft-lb/ft
Backslope Soil, I_A =	12.68	lb/ft
Dist. From Ftg Toe, X_2 =	6.66	ft
Resisting Moment, RM2 =	84	ft-lb/ft
Soil Above Anchor, I_B =	10827	lb/ft
Dist. From Ftg Toe, X_3 =	5.47	ft
Resisting Moment, RM3 =	59267	ft-lb/ft
Weight of Soil, II_A =	2122	lb/ft
Dist. From Ftg Toe, X_4 =	4.079	ft
Resisting Moment, RM4 =	8657	ft-lb/ft

Project: 2014.059.004 BY: YL 3/19/2014
Anchored Wingwall - Wingwall 1 CHK: SCW 3/24/14

Anchor #1 w/ Footing Stability Check

Driving Forces (Con't):

Force P_{ftg} 1 =	1079	lb/ft
Moment Arm, y_5 =	0.96	ft
Overturning Moment, DM5 =	1034	ft-lb/ft
Force P_{ftg} 2 =	62	lb/ft
Moment Arm, y_6 =	0.64	ft
Overturning Moment, DM6 =	40	ft-lb/ft

Resisting Forces (Con't):

Weight of Soil, H_B =	684	lb/ft
Dist. From Ftg Toe, X_5 =	7.175	ft
Resisting Moment, RM5 =	4904	ft-lb/ft
Force P_{ABV} =	1399	lb/ft
Moment Arm, x6 =	9.03	ft
Resisting Moment, RM6 =	12639	ft-lb/ft
Force P_{BC1V} =	-198	lb/ft
Moment Arm, x7 =	7.64	ft
Resisting Moment, RM7 =	-1515	ft-lb/ft
Force P_{BC2V} =	-30	lb/ft
Moment Arm, x8 =	7.17	ft
Resisting Moment, RM8 =	-216	ft-lb/ft
Force P_{ftgV}=	544	lb/ft
Moment Arm, x9 =	2.99	ft
Resisting Moment, RM9 =	1628	ft-lb/ft
Footing Stem Weight =	0	lb/ft
Moment Arm, x10 =	1.50	ft
Resisting Moment, RM10 =	0	ft-lb/ft
Footing Weight =	860.5833333	lb/ft
Moment Arm, x11 =	1.50	ft
Resisting Moment, RM11 =	1288	ft-lb/ft
Soil Over Footing Heel Psoil =	0	lb/ft
Moment Arm, x12 =	2.45	ft
Resisting Moment, RM12 =	0	ft-lb/ft

Location of Resultant Force:

x = 1.726 ft (note: 80% of soil weight used for overturning resist.)
e = 1.73 ft

Overturning Check: = ∑ V / (B-2e) EQ. 11.6.3.2-1

Footing Length, B = 6.92
1/4 B = 1.73 < e ~~N.G.~~ SAY ok

Bearing Check:

Locate resultant for bearing (uses 100% soil weight)

x = 2.282 ft
e = 1.18 ft
Beff = 4.56 ft
Factored Bearing Pressure = 5416 psf
Bearing Resistance, ϕq_{ult} = 14100 > Bearing Pressure OK!

Sliding Check:

Factored Sliding Force = 7231 ft-lb/ft
Factored Vertical Loads = 17750 ft-lb/ft
Sliding Resistance = 9585 ft-lb/ft OK!

Project: 2014.059.004 BY: YL 5/20/2014
Anchored Wingwall - Wingwall 1 CHK: PA 5-28-14

Check Bending in Wall - Vertical Bars

Assumptions: 1.) Wall stem is cantileverd from anchor.
2.) Use active earth pressure because wall is free to rotate.
3.) Critical Wall section will be at maximum horizontal load, at tallest anchor section.

Modification Factor = 1

Data:

H_{max} =	16.69	ft
h_{max} =	13.19	ft
LL surcharge, V_{LS} =	0.000	ksf
γ_{soil} =	0.140	ksf
K_a =	0.27	
δ =	25.5	
f'c =	5	ksi
fy =	60	ksi
Vertical Bars Size:	# 6	
Spacing:	7	in

Find the horizontal load:

$$P_{soil} = (1/2)\gamma_S K_A h_{max}^2 (\cos\delta) = 2.93 \text{ kip/ft}$$
$$P_{LS} = \sigma_{LS} K_A h_{max} (\cos\delta) = 0.00 \text{ kip/ft}$$

Load Factors: EH = 1.50
LS = 1.75

Factored Loads:

Mu =EH(P_{soil})(h_{max}/3) + LS(P_{LS})(h_{max}/2) = **19.34 kip-ft/ft**
Vu =EH(P_{soil})+LS(P_{LS}) = **4.40 kip/ft**

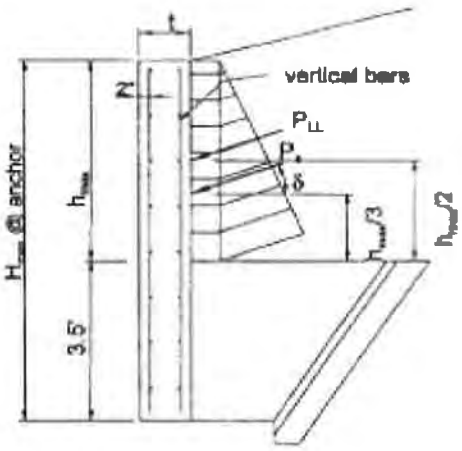

Moment Capacity:

As prov. :	0.757	in^2
d (in):	7.63	d = t - 2" cov. - 1/2 Bar ϕ
a (in):	0.891	a=As*fy/(0.85*b*f'c)
ϕMn (kip-ft):	**24.47**	ϕMn = 0.90*As*fy*(d-a/2)/12
ϕMn	>	Mu **OK!**

Shear Capacity Check

ϕVn (kip):	**11.64**	ϕVn = 0.90*β*√f'c*b*d
β = 2.00		
ϕVn	>	Vu **OK!**

Crack Control Check

Ma = 12.90 **kip-ft/ft**
γe= 0.75
ρn = 0.058982 dc= 1.88in

$$E_c = 1820 \bullet \sqrt{f'c} = 4070\text{ksi}$$

$$E_s = 29000\text{ksi} \qquad k = \sqrt{2\rho n + \rho n^2} - \rho n = 0.290$$

$$n = E_s / E_c = 7.13 \qquad j = 1 - (k/3) = 0.903$$

$$f_s = (M)/(A_s jd) = 29.66 \text{ ksi}$$

Bs=1+dc/(0.7*(h-dc))= 1.35
max spa ≤ [(700γe) / (βsfs)] - 2dc = 9 in **OK!**

Project: 2014.059.004 BY: YL 3/19/2014
Anchored Wingwall - Wingwall 1 CHK: SCU 3/24/14

Check Anchor Attachment

Assumptions: 1.) Only top three connection bars, represented by T1, T2 & T3 in sketch below, will resist tension.
2.) Assume min. steel will control, design for 1.33 Mu (See ART. 5.7.3.3.2)

Anchor #1 $M_{D\,DL}$=	100.98 kip-ft	Anchor #1 $M_{D\,LS}$=	0 kip-ft
Anchor #2 $M_{D\,DL}$=	0.00 kip-ft	Anchor #2 $M_{D\,LS}$=	0 kip-ft
Anchor #3 $M_{D\,DL}$=	0.00 kip-ft	Anchor #3 $M_{D\,LS}$=	0 kip-ft

Modification Factor = 1.00

Data:

Max. $M_{D\,DL}$ =	100.98 kip-ft
Max. $M_{D\,LS}$ =	0.00 kip-ft
f'c =	5 ksi
fy =	60 ksi
Connection Bars Size:	# 5

Load Factors: EH = 1.50
LS= 1.75

Factored Loads:

1.33 Mu = 1.33(EH($M_{D\,DL}$) + LS($M_{D\,LS}$)) = **201.46 kip-ft**

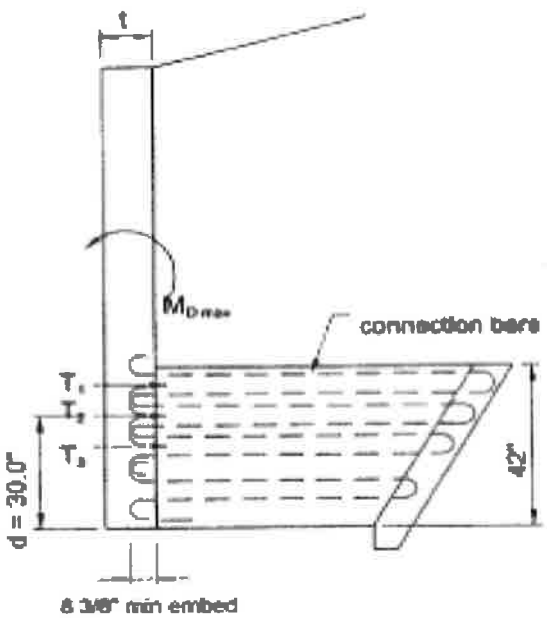

Moment Capacity:

As prov. :	1.841	in^2	(6 Bars)
d (in):	30.00		
b (in):	6.00		
a (in):	4.331	a=As*fy/(0.85*b*f'c)	
ϕMn (kip-ft):	**230.57**	ϕMn = 0.90*As*fy*(d-a/2)/12	
ϕMn	>	Mu	**OK!**

Check Hook Development:

db (in): 0.625

ART 5.11.2.4

L_{hb} (in):	10.62	<-- Controls
or		
8db (in):	5.00	
or		
6in min:	6.00	

L_{dh} (in): 7.43 =(0.7)L_{hb}

Project: 2014.059.004 BY: YL 3/24/2014
Anchored Wingwall - Wingwall 2 and Wingwall 3 CHK: SLJ 3/24/14

Wingwall Stability Check:

Wall Height (high) =	15.53 ft	ϕ_{AB} =	34
Wall Height (low) =	2.12 ft	θ_{AB} =	90
Wall Length =	35.00 ft	δ_{AB} =	26
Unit Weight of Backfill, γ_{soil} =	140.00	$(Ka)_{AB}$ =	0.25
Unit Weight of Conc, γ_c =	150.00	ϕ_{BC} =	34
Broken Back slope β =	0.00 deg.	θ_{BC} =	120
Wall thickness =	10.00 in	δ_{BC} =	17
Bearing Resistance, ϕq_{ult} =	14100 psf	$(Ka)_{BC}$ =	0.09
Friction Coefficient μ =	0.54		

	Dist. To Anchor	Height at Anchor	Contributary width	Anchor type	Bearing Pressure	Stability Check
Anchor #1:	2.50 ft	14.94 ft	5.00 ft	D	5297	OK!
Anchor #2:	12.50 ft	11.61 ft	5.50 ft	C	4231	OK!
Anchor #3:	22.50 ft	7.08 ft	5.00 ft	B	2505	OK!
Anchor #4:	27.50 ft	5.11 ft	10.00 ft	B	0	OK!
Anchor #5:	0.00 ft	0.00 ft	0.00 ft		NA	NA

Distance from front of ftg. to front of wall, O = 0 in

Anchor Type Data

Anchor Type	Length at Bottom Anchor	Anchor End	Total	Length at Top Anchor	Anchor End	Total
	(in)	(in)	(in)	(in)	(in)	(in)
B	16	8.08	24.08	41.375	8.08	49.455
C	28	8.08	36.08	53.375	8.08	61.455
D	40	8.08	48.08	65.375	8.08	73.455
E	52	8.08	60.08	77.375	8.08	85.455

Project: 2014.059.004 BY: YL 3/21/2014
Anchored Wingwall - Wingwall 2 and Wingwall 3 CHK: SLV 3/24/14

Anchor #1 Stability Check

Soil Properties:

Active Earth Coeff., $(Ka)_{AB}$ =	0.254
Active Earth Coeff., $(Ka)_{ABH}$ =	0.229
Active Earth Coeff., $(Ka)_{ABV}$ =	0.109
Active Earth Coeff., $(Ka)_{BC}$ =	0.089
Active Earth Coeff., $(Ka)_{BCH}$ =	0.085
Active Earth Coeff., $(Ka)_{BCV}$ =	0.026

Load Factors:

	(overturning & sliding)	(Bearing Pressure)
EH =	1.50	1.5
EV =	1.00	1.35
DC =	0.90	1.5
LS =	1.75	1.75

Modification Factor = 1.00

Overturning Check:

Anchor Height =	14.94	ft
Design Wall Height, H =	14.94	ft
Anchor Type =	D	
Anchor Length at Top, L_{top} =	6.12	ft
Anchor Length at Bot., $L_{bot.}$ =	4.01	ft

Back slope $\beta 1$ = 0.00 deg.

Soil Pressure:

Horizontal (kah) :

Soil Pressure at A, σ_{LL} =	0	psf
Soil Pressure at B, σ_{Bab} =	367.53	psf
Soil Pressure at B, σ_{Bbc} =	136.52	psf
Soil Pressure at C, σ_{BOT} =	184.25	psf

Vertical (kav) :

Soil Pressure at A, σ_{LL} =	0	psf
Soil Pressure at B, σ_{Bab} =	175.30	psf
Soil Pressure at B, σ_{Bbc} =	-41.74	psf
Soil Pressure at C, σ_{BOT} =	-56.33	psf

Driving Forces:

Force $P_{Surcharge}$ =	0	lb/ft
Moment Arm, y_1 =	7.47	ft
Overturning Moment, DM1 =	0	ft-lb/ft
Force P_{ABH} =	2102	lb/ft
Moment Arm, y_2 =	7.31	ft
Overturning Moment, DM2 =	15375	ft-lb/ft
Force P_{BC1H} =	546	lb/ft
Moment Arm, y_3 =	1.50	ft
Overturning Moment, DM3 =	819	ft-lb/ft
Force P_{BC2H} =	95	lb/ft
Moment Arm, y_4 =	0.83	ft
Overturning Moment, DM4 =	80	ft-lb/ft

Resisting Forces:

Weight of Wall, Ww =	1868	lb/ft
Dist. From PT. O, X_1 =	0.42	ft
Resisting Moment, RM1 =	778	ft-lb/ft
Backslope Soil, I_A =	0.00	lb/ft
Dist. From PT. O, X_2 =	4.91	ft
Resisting Moment, RM2 =	0	ft-lb/ft
Soil Above Anchor, I_B =	9804	lb/ft
Dist. From PT. O, X_3 =	3.89	ft
Resisting Moment, RM3 =	38176	ft-lb/ft
Weight of Soil, II_A =	1632	lb/ft
Dist. From PT. O, X_4 =	2.499	ft
Resisting Moment, RM4 =	4079	ft-lb/ft

Project: 2014.059.004 BY: YL 3/21/2014
Anchored Wingwall - Wingwall 2 and Wingwall 3 CHK: SLW 3/21/14

Anchor #1 Stability Check

Resisting Forces (Con't):

Weight of Soil, W_B =	684	lb/ft
Dist. From PT. O, X_5 =	5.095	ft
Resisting Moment, RM5 =	3482	ft-lb/ft
Force P_{ABV} =	1003	lb/ft
Moment Arm, x6 =	6.95	ft
Resisting Moment, RM6 =	6974	ft-lb/ft
Force P_{BC1V} =	-167	lb/ft
Moment Arm, x7 =	5.56	ft
Resisting Moment, RM7 =	-928	ft-lb/ft
Force P_{BC2V} =	-29	lb/ft
Moment Arm, x8 =	5.09	ft
Resisting Moment, RM8 =	-149	ft-lb/ft

Location of Resultant Force:

x = 1.541 ft (note: 80% of soil weight used for overturning resist.)
e = 0.88 ft

Overturning Check: $= \sum V / (B-2e)$ EQ. 11.6.3.2-1

Footing Length, B = 4.84
1/4 B = 1.21 > e OK!

Bearing Check:

Locate resultant for bearing (uses 100% soil weight)

x = 1.912
e = 0.51
Beff = 3.82 ft
Factored Bearing Pressure = 5297 psf
Bearing Resistance, ϕq_{ult} = 14100 > Bearing Pressure OK!

Sliding Check:

Factored Sliding Force = 4116 ft-lb/ft
Factored Vertical Loads = 14607 ft-lb/ft
Sliding Resistance = 7888 ft-lb/ft OK!

Project: 2014.059.004 BY: YL 3/21/2014
Anchored Wingwall - Wingwall 2 and Wingwall 3 CHK: SLV 3/24/14

Anchor #1 w/ Footing Stability Check

Soil Properties:

Active Earth Coeff., $(Ka)_{AB}$ =	0.254	
Active Earth Coeff., $(Ka)_{ABH}$ =	0.229	
Active Earth Coeff., $(Ka)_{ABV}$ =	0.109	
Active Earth Coeff., $(Ka)_{BC}$ =	0.089	
Active Earth Coeff., $(Ka)_{BCH}$ =	0.085	
Active Earth Coeff., $(Ka)_{BCV}$ =	0.026	

Load Factors:

	(overturning & sliding)	(Bearing Pressure)
EH =	1.50	1.5
EV =	1.00	1.35
DC =	0.90	1.5
LS =	1.75	1.75

Modification Factor = 1.00

Overturning Check:

Anchor Height =	14.94	ft
Design Wall Height, H =	14.94	ft
Anchor Type =	D	
Anchor Length at Top, L_{top} =	6.12	ft
Anchor Length at Bot., L_{bot} =	4.01	ft

Footing Information:

Toe =	1.08	ft
Footing Stem Width(thickness) =	10	in
Footing Heel =	1.08	ft
Footing Width =	2.99	ft
WW Stem Offset wrt Ftg Stem	0.00	in
FTG Stem Height =	0.00	ft
FTG Thickness =	23	in
Back slope β1 =	0.00	deg.

Soil Pressure:

Horizontal (kah) :

Soil Pressure at A, σ_{LL} =	0.00	psf
Soil Pressure at B, σ_{Bab} =	367.53	psf
Soil Pressure at B, σ_{Bbc} =	136.52	psf
Soil Pressure at C, σ_{BOT} =	184.25	psf
Soil Press. at top of ftg Stem =	479.98	psf
Soil Press. at Bottom of ftg =	541.55	psf

Vertical (kav) :

Soil Pressure at A, σ_{LL} =	0.00	psf
Soil Pressure at B, σ_{Bab} =	175.30	psf
Soil Pressure at B, σ_{Bbc} =	-41.74	psf
Soil Pressure at C, σ_{BOT} =	-56.33	psf
Soil Press. at top of ftg Stem =	228.94	psf
Soil Press. at Bottom of ftg =	258.31	psf

Driving Forces:

Force $P_{Surcharge}$ =	0	lb/ft
Moment Arm, y_1 =	8.43	ft
Overturning Moment, DM1 =	0	ft-lb/ft
Force P_{ABH} =	2102	lb/ft
Moment Arm, y_2 =	9.23	ft
Overturning Moment, DM2 =	19404	ft-lb/ft
Force P_{BC1H} =	546	lb/ft
Moment Arm, y_3 =	3.42	ft
Overturning Moment, DM3 =	1866	ft-lb/ft
Force P_{BC2H} =	95	lb/ft
Moment Arm, y_4 =	2.75	ft
Overturning Moment, DM4 =	263	ft-lb/ft

Resisting Forces:

Weight of Wall, Ww =	1868	lb/ft
Dist. From Ftg Toe, X_1 =	1.50	ft
Resisting Moment, RM1 =	2795	ft-lb/ft
Backslope Soil, I_A =	0.00	lb/ft
Dist. From Ftg Toe, X_2 =	5.99	ft
Resisting Moment, RM2 =	0	ft-lb/ft
Soil Above Anchor, I_B =	9804	lb/ft
Dist. From Ftg Toe, X_3 =	4.97	ft
Resisting Moment, RM3 =	48764	ft-lb/ft
Weight of Soil, II_A =	1632	lb/ft
Dist. From Ftg Toe, X_4 =	3.579	ft
Resisting Moment, RM4 =	5842	ft-lb/ft

Project: 2014.059.004 BY: YL 3/21/2014
Anchored Wingwall - Wingwall 2 and Wingwall 3 CHK: SLO 3/24/14

Anchor #1 w/ Footing Stability Check

Driving Forces (Con't):

Force P_{ftg} 1 =	920	lb/ft
Moment Arm, y_5 =	0.96	ft
Overturning Moment, DM5 =	882	ft-lb/ft
Force P_{ftg} 2 =	59	lb/ft
Moment Arm, y_6 =	0.64	ft
Overturning Moment, DM6 =	38	ft-lb/ft

Resisting Forces (Con't):

Weight of Soil, II_B =	684	lb/ft
Dist. From Ftg Toe, X_5 =	6.175	ft
Resisting Moment, RM5 =	4221	ft-lb/ft
Force P_{ABV} =	1003	lb/ft
Moment Arm, x6 =	8.03	ft
Resisting Moment, RM6 =	8057	ft-lb/ft
Force P_{BC1V} =	-167	lb/ft
Moment Arm, x7 =	6.64	ft
Resisting Moment, RM7 =	-1108	ft-lb/ft
Force P_{BC2V} =	-29	lb/ft
Moment Arm, x8 =	6.17	ft
Resisting Moment, RM8 =	-180	ft-lb/ft
Force P_{ftgV}=	467	lb/ft
Moment Arm, x9 =	2.99	ft
Resisting Moment, RM9 =	1398	ft-lb/ft
Footing Stem Weight =	0	lb/ft
Moment Arm, x10 =	1.50	ft
Resisting Moment, RM10 =	0	ft-lb/ft
Footing Weight =	860.5833333	lb/ft
Moment Arm, x11 =	1.50	ft
Resisting Moment, RM11 =	1288	ft-lb/ft
Soil Over Footing Heel Psoil =	0	lb/ft
Moment Arm, x12 =	2.45	ft
Resisting Moment, RM12 =	0	ft-lb/ft

Location of Resultant Force:

x = 1.879 ft (note: 80% of soil weight used for overturning resist.)
e = 1.08 ft

Overturning Check: $= \sum V / (B-2e)$ EQ. 11.6.3.2-1

Footing Length, B = 5.92
1/4 B = 1.48 > e OK!

Bearing Check:

Locate resultant for bearing (uses 100% soil weight)
x = 2.334 ft
e = 0.63 ft
Beff = 4.67 ft
Factored Bearing Pressure = 4750 psf
Bearing Resistance, ϕq_{ult} = 14100 > Bearing Pressure OK!

Sliding Check:

Factored Sliding Force = 5584 ft-lb/ft
Factored Vertical Loads = 15848 ft-lb/ft
Sliding Resistance = 8558 ft-lb/ft OK!

Project: 2014.059.004 BY: YL 3/21/2014
Anchored Wingwall - Wingwall 2 and Wingwall 3 CHK: SLV 3/24/14

Anchor #2 Stability Check

Soil Properties:

Active Earth Coeff., $(Ka)_{AB}$ =	0.254
Active Earth Coeff., $(Ka)_{ABH}$ =	0.229
Active Earth Coeff., $(Ka)_{ABV}$ =	0.109
Active Earth Coeff., $(Ka)_{BC}$ =	0.089
Active Earth Coeff., $(Ka)_{BCH}$ =	0.085
Active Earth Coeff., $(Ka)_{BCV}$ =	0.026

Load Factors:

	(overturning & sliding)	(Bearing Pressure)
EH =	1.50	1.5
EV =	1.00	1.35
DC =	0.90	1.5
LS =	1.75	1.75

Modification Factor = 1.00

Overturning Check:

Anchor Height =	11.61	ft
Design Wall Height, H =	11.61	ft
Anchor Type =	C	
Anchor Length at Top, L_{top} =	5.12	ft
Anchor Length at Bot., L_{bot} =	3.01	ft

Back slope $\beta 1$ = 0.00 deg.

Soil Pressure:

Horizontal (kah) :

Soil Pressure at A, σ_{LL} =	0	psf
Soil Pressure at B, σ_{Bab} =	260.55	psf
Soil Pressure at B, σ_{Bbc} =	96.78	psf
Soil Pressure at C, σ_{BOT} =	144.51	psf

Vertical (kav) :

Soil Pressure at A, σ_{LL} =	0	psf
Soil Pressure at B, σ_{Bab} =	124.28	psf
Soil Pressure at B, σ_{Bbc} =	-29.59	psf
Soil Pressure at C, σ_{BOT} =	-44.18	psf

Driving Forces:

Force $P_{Surcharge}$ =	0	lb/ft
Moment Arm, y_1 =	5.81	ft
Overturning Moment, DM1 =	0	ft-lb/ft
Force P_{ABH} =	1057	lb/ft
Moment Arm, y_2 =	6.20	ft
Overturning Moment, DM2 =	6554	ft-lb/ft
Force P_{BC1H} =	387	lb/ft
Moment Arm, y_3 =	1.50	ft
Overturning Moment, DM3 =	581	ft-lb/ft
Force P_{BC2H} =	95	lb/ft
Moment Arm, y_4 =	0.83	ft
Overturning Moment, DM4 =	80	ft-lb/ft

Resisting Forces:

Weight of Wall, Ww =	1451	lb/ft
Dist. From PT. O, X_1 =	0.42	ft
Resisting Moment, RM1 =	605	ft-lb/ft
Backslope Soil, I_A =	0.00	lb/ft
Dist. From PT. O, X_2 =	4.25	ft
Resisting Moment, RM2 =	0	ft-lb/ft
Soil Above Anchor, I_B =	5815	lb/ft
Dist. From PT. O, X_3 =	3.39	ft
Resisting Moment, RM3 =	19735	ft-lb/ft
Weight of Soil, II_A =	1142	lb/ft
Dist. From PT. O, X_4 =	1.999	ft
Resisting Moment, RM4 =	2283	ft-lb/ft

Project: 2014.059.004 BY: YL 3/21/2014
Anchored Wingwall - Wingwall 2 and Wingwall 3 CHK: SLV 3/29/14

Anchor #2 Stability Check

Resisting Forces (Con't):

Weight of Soil, W_B =	684	lb/ft
Dist. From PT. O, X_5 =	4.095	ft
Resisting Moment, RM5 =	2799	ft-lb/ft
Force P_{ABV} =	504	lb/ft
Moment Arm, x6 =	5.95	ft
Resisting Moment, RM6 =	3001	ft-lb/ft
Force P_{BC1V} =	-118	lb/ft
Moment Arm, x7 =	4.56	ft
Resisting Moment, RM7 =	-540	ft-lb/ft
Force P_{BC2V} =	-29	lb/ft
Moment Arm, x8 =	4.09	ft
Resisting Moment, RM8 =	-120	ft-lb/ft

Location of Resultant Force:

x = 1.533 ft (note: 80% of soil weight used for overturning resist.)

e = 0.39 ft

Overturning Check: $= \sum V / (B-2e)$ EQ. 11.6.3.2-1

Footing Length, B = 3.84

1/4 B = 0.96 > e OK!

Bearing Check:

Bearing Pressures:

Factored Bearing Pressure = 4231 psf

Bearing Resistance, ϕq_{ult} = 14100 > Bearing Pressure OK!

Sliding Check:

Factored Sliding Force = 2309 ft-lb/ft

Factored Vertical Loads = 9303 ft-lb/ft

Sliding Resistance = 5024 ft-lb/ft OK!

Project: 2014.059.004 BY: YL 3/21/2014
Anchored Wingwall - Wingwall 2 and Wingwall 3 CHK: SLJ 3/24/14

Anchor #3 Stability Check

Soil Properties:

Active Earth Coeff., $(Ka)_{AB}$ =	0.254
Active Earth Coeff., $(Ka)_{ABH}$ =	0.229
Active Earth Coeff., $(Ka)_{ABV}$ =	0.109
Active Earth Coeff., $(Ka)_{BC}$ =	0.089
Active Earth Coeff., $(Ka)_{BCH}$ =	0.085
Active Earth Coeff., $(Ka)_{BCV}$ =	0.026

Load Factors:

	(overturning & sliding)	(Bearing Pressure)
EH =	1.50	1.5
EV =	1.00	1.35
DC =	0.90	1.5
LS =	1.75	1.75

Modification Factor = 1.00

Overturning Check:

Anchor Height =	7.08	ft
Design Wall Height, H =	7.08	ft
Anchor Type =	B	
Anchor Length at Top, L_{top} =	4.12	ft
Anchor Length at Bot., L_{bot} =	2.01	ft

Back slope $\beta 1$ = 0.00 deg.

Soil Pressure:

Horizontal (kah) :

Soil Pressure at A, σ_{LL} =	0	psf
Soil Pressure at B, σ_{Bab} =	115.01	psf
Soil Pressure at B, σ_{Bbc} =	42.72	psf
Soil Pressure at C, σ_{BOT} =	90.45	psf

Vertical (kav) :

Soil Pressure at A, σ_{LL} =	0	psf
Soil Pressure at B, σ_{Bab} =	54.86	psf
Soil Pressure at B, σ_{Bbc} =	-13.06	psf
Soil Pressure at C, σ_{BOT} =	-27.65	psf

Driving Forces:

Force $P_{Surcharge}$ =	0	lb/ft
Moment Arm, y_1 =	3.54	ft
Overturning Moment, DM1 =	0	ft-lb/ft
Force P_{ABH} =	206	lb/ft
Moment Arm, y_2 =	4.69	ft
Overturning Moment, DM2 =	966	ft-lb/ft
Force P_{BC1H} =	171	lb/ft
Moment Arm, y_3 =	1.50	ft
Overturning Moment, DM3 =	256	ft-lb/ft
Force P_{BC2H} =	95	lb/ft
Moment Arm, y_4 =	0.83	ft
Overturning Moment, DM4 =	80	ft-lb/ft

Resisting Forces:

Weight of Wall, Ww =	885	lb/ft
Dist. From PT. O, X_1 =	0.42	ft
Resisting Moment, RM1 =	369	ft-lb/ft
Backslope Soil, I_A =	0.00	lb/ft
Dist. From PT. O, X_2 =	3.58	ft
Resisting Moment, RM2 =	0	ft-lb/ft
Soil Above Anchor, I_B =	2066	lb/ft
Dist. From PT. O, X_3 =	2.89	ft
Resisting Moment, RM3 =	5978	ft-lb/ft
Weight of Soil, II_A =	652	lb/ft
Dist. From PT. O, X_4 =	1.499	ft
Resisting Moment, RM4 =	978	ft-lb/ft

Project: 2014.059.004 BY: YL 3/21/2014
Anchored Wingwall - Wingwall 2 and Wingwall 3 CHK: SLV 3/24/14

Anchor #3 Stability Check

Resisting Forces (Con't):

Weight of Soil, W_B =	684	lb/ft
Dist. From PT. O, X_5 =	3.095	ft
Resisting Moment, RM5 =	2115	ft-lb/ft
Force P_{ABV} =	98	lb/ft
Moment Arm, x6 =	4.95	ft
Resisting Moment, RM6 =	487	ft-lb/ft
Force P_{BC1V} =	-52	lb/ft
Moment Arm, x7 =	3.56	ft
Resisting Moment, RM7 =	-186	ft-lb/ft
Force P_{BC2V} =	-29	lb/ft
Moment Arm, x8 =	3.09	ft
Resisting Moment, RM8 =	-90	ft-lb/ft

Location of Resultant Force:

x = 1.654 ft (note: 80% of soil weight used for overturning resist.)

e = -0.23 ft

Overturning Check: $= \sum V / (B-2e)$ EQ. 11.6.3.2-1

Footing Length, B = 2.84

1/4 B = 0.71 > e OK!

Bearing Check:

Bearing Pressures:

Factored Bearing Pressure = 2505 psf

Bearing Resistance, ϕq_{ult} = 14100 > Bearing Pressure OK!

Sliding Check:

Factored Sliding Force = 708 ft-lb/ft

Factored Vertical Loads = 4215 ft-lb/ft

Sliding Resistance = 2276 ft-lb/ft OK!

Project: 2014.059.004 BY: YL 3/21/2014
Anchored Wingwall - Wingwall 2 and Wingwall 3 CHK: SLJ 3/24/14

Anchor #4 Stability Check

Soil Properties:

Active Earth Coeff., $(Ka)_{AB}$ =	0.254
Active Earth Coeff., $(Ka)_{ABH}$ =	0.229
Active Earth Coeff., $(Ka)_{ABV}$ =	0.109
Active Earth Coeff., $(Ka)_{BC}$ =	0.089
Active Earth Coeff., $(Ka)_{BCH}$ =	0.085
Active Earth Coeff., $(Ka)_{BCV}$ =	0.026

Load Factors:

	(overturning & sliding)	(Bearing Pressure)
EH =	1.50	1.5
EV =	1.00	1.35
DC =	0.90	1.5
LS =	1.75	1.75

Modification Factor = 0.55

Overturning Check:

Anchor Height = 5.11 ft
Design Wall Height, H = 5.11 ft
Anchor Type = B
Anchor Length at Top, L_{top} = 4.12 ft
Anchor Length at Bot., $L_{bot.}$ = 2.01 ft

Back slope $\beta 1$ = 0.00 deg.

Soil Pressure:

Horizontal (kah) :

Soil Pressure at A, σ_{LL} =	0	psf
Soil Pressure at B, σ_{Bab} =	51.72	psf
Soil Pressure at B, σ_{Bbc} =	19.21	psf
Soil Pressure at C, σ_{BOT} =	66.95	psf

Vertical (kav) :

Soil Pressure at A, σ_{LL} =	0	psf
Soil Pressure at B, σ_{Bab} =	24.67	psf
Soil Pressure at B, σ_{Bbc} =	-5.87	psf
Soil Pressure at C, σ_{BOT} =	-20.47	psf

Driving Forces:

Force $P_{Surcharge}$ =	0	lb/ft
Moment Arm, y_1 =	2.56	ft
Overturning Moment, DM1 =	0	ft-lb/ft
Force P_{ABH} =	42	lb/ft
Moment Arm, y_2 =	4.04	ft
Overturning Moment, DM2 =	168	ft-lb/ft
Force P_{BC1H} =	77	lb/ft
Moment Arm, y_3 =	1.50	ft
Overturning Moment, DM3 =	115	ft-lb/ft
Force P_{BC2H} =	95	lb/ft
Moment Arm, y_4 =	0.83	ft
Overturning Moment, DM4 =	80	ft-lb/ft

Resisting Forces:

Weight of Wall, Ww =	639	lb/ft
Dist. From PT. O, X_1 =	0.42	ft
Resisting Moment, RM1 =	266	ft-lb/ft
Backslope Soil, I_A =	0.00	lb/ft
Dist. From PT. O, X_2 =	3.58	ft
Resisting Moment, RM2 =	0	ft-lb/ft
Soil Above Anchor, I_B =	929	lb/ft
Dist. From PT. O, X_3 =	2.89	ft
Resisting Moment, RM3 =	2688	ft-lb/ft
Weight of Soil, II_A =	652	lb/ft
Dist. From PT. O, X_4 =	1.499	ft
Resisting Moment, RM4 =	978	ft-lb/ft

Project: 2014.059.004 BY: YL 3/21/2014
Anchored Wingwall - Wingwall 2 and Wingwall 3 CHK: SLV 3/24/14

Anchor #4 Stability Check

Resisting Forces (Con't):

Weight of Soil, W_B =	684	lb/ft
Dist. From PT. O, X_5 =	3.095	ft
Resisting Moment, RM5 =	2115	ft-lb/ft
Force P_{ABV} =	20	lb/ft
Moment Arm, x6 =	4.95	ft
Resisting Moment, RM6 =	98	ft-lb/ft
Force P_{BC1V} =	-23	lb/ft
Moment Arm, x7 =	3.56	ft
Resisting Moment, RM7 =	-84	ft-lb/ft
Force P_{BC2V} =	-29	lb/ft
Moment Arm, x8 =	3.09	ft
Resisting Moment, RM8 =	-90	ft-lb/ft

Location of Resultant Force:

x = 1.614 ft (note: 80% of soil weight used for overturning resist.)

e = -0.19 ft

Overturning Check: $= \sum V / (B-2e)$ EQ. 11.6.3.2-1

Footing Length, B = 2.84

1/4 B = 0.71 > e OK!

Bearing Check:

Bearing Pressures:

Factored Bearing Pressure = 1620 psf

Bearing Resistance, ϕq_{ult} = 14100 > Bearing Pressure OK!

Sliding Check:

Factored Sliding Force = 321 ft-lb/ft

Factored Vertical Loads = 2807 ft-lb/ft

Sliding Resistance = 1516 ft-lb/ft OK!

Project: 2014.059.004 BY: YL 5/20/2014
Anchored Wingwall - Wingwall 2 and Wingwall 3 CHK: RA 5-20-14

Check Bending in Wall - Vertical Bars

Assumptions: 1.) Wall stem is cantileverd from anchor.
2.) Use active earth pressure because wall is free to rotate.
3.) Critical Wall section will be at maximum horizontal load, at tallest anchor section.

Modification Factor = 1

Data:

H_{max} =	14.94	ft
h_{max} =	11.44	ft
LL surcharge, V_{LS} =	0.000	ksf
γ_{soil} =	0.140	ksf
K_a =	0.25	
δ =	25.5	
f'c =	5	ksi
fy =	60	ksi
Vertical Bars Size:	# 5	
Spacing:	8	in

Find the horizontal load:

$$P_{soil} = (1/2)\gamma_S K_A h_{max}^2(\cos\delta) = 2.10 \text{ kip/ft}$$
$$P_{LS} = \sigma_{LS} K_A h_{max}(\cos\delta) = 0.00 \text{ kip/ft}$$

Load Factors: EH = 1.50
LS = 1.75

Factored Loads:

Mu =EH(P_{soil})(h_{max}/3) + LS(P_{LS})(h_{max}/2) = **12.03 kip-ft/ft**
Vu =EH(P_{soil})+LS(P_{LS}) = **3.15 kip/ft**

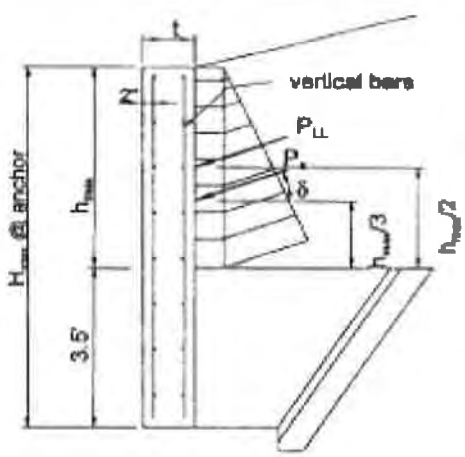

Moment Capacity:

As prov. :	0.460	in^2
d (in):	7.69	d = t - 2" cov - 1/2 Bar ϕ
a (in):	0.541	a=As*fy/(0.85*b*f'c)
ϕMn (kip-ft):	**15.36**	ϕMn = 0.90*As*fy*(d-a/2)/12
ϕMn	>	Mu **OK!**

Shear Capacity Check

ϕVn (kip): **11.73** ϕVn = 0.90*β*√f'c*b*d
β = 2.00
ϕVn > Vu **OK!**

Crack Control Check

Ma = 8.02 **kip-ft/ft**
γe= 0.75
ρn = 0.035548 dc= 1.81in

$E_c = 1820 \bullet \sqrt{f'c} =$ 4070ksi

$E_s =$ 29000ksi $k = \sqrt{2\rho n + \rho n^2} - \rho n =$ 0.233

$n = E_s / E_c =$ 7.13 $j = 1 - (k/3) =$ 0.922

$f_s = (M)/(A_s jd) =$ 29.49 ksi

Bs=1+dc/(0.7*(h-dc))= 1.34
max spa ≤ [(700γe) / (βsfs)] - 2dc = 10 in **OK!**

Project: 2014.059.004 BY: YL 3/21/2014
Anchored Wingwall - Wingwall 2 and Wingwall 3 CHK: SLJ 3/24/14

Check Anchor Attachment

Assumptions: 1.) Only top three connection bars, represented by T1, T2 & T3 in sketch below, will resist tension.
2.) Assume min. steel will control, design for 1.33 Mu (See ART. 5.7.3.3.2)

Anchor #1 $M_{D\,DL}$=	81.37 kip-ft	Anchor #1 $M_{D\,LS}$=	0 kip-ft
Anchor #2 $M_{D\,DL}$=	39.68 kip-ft	Anchor #2 $M_{D\,LS}$=	0 kip-ft
Anchor #3 $M_{D\,DL}$=	6.51 kip-ft	Anchor #3 $M_{D\,LS}$=	0 kip-ft
Anchor #4 $M_{D\,DL}$=	3.63 kip-ft	Anchor #3 $M_{D\,LS}$=	0 kip-ft

Modification Factor = 1.00

Data:

Max. $M_{D\,DL}$ = 81.37 kip-ft
Max. $M_{D\,LS}$ = 0.00 kip-ft
f'c = 5 ksi
fy = 60 ksi
Connection Bars Size: # 5

Load Factors: EH = 1.50
LS= 1.75

Factored Loads:

1.33 Mu = 1.33(EH($M_{D\,DL}$) + LS($M_{D\,LS}$)) = **162.33 kip-ft**

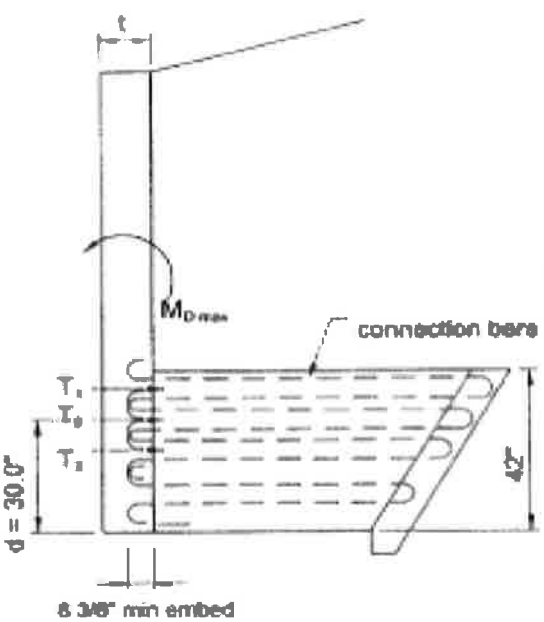

Moment Capacity:

As prov. : 1.841 in^2 (6 Bars)
d (in): 30.00
b (in): 6.00
a (in): 4.331 a=As*fy/(0.85*b*f'c)

ϕMn (kip-ft): **230.57** ϕMn = 0.90*As*fy*(d-a/2)/12
ϕMn > Mu **OK!**

Check Hook Development:

db (in): 0.625
ART 5.11.2.4

L_{hb} (in):	10.62	<-- Controls
or		
8db (in):	5.00	
or		
6in min:	6.00	

L_{dh} (in): 7.43 =(0.7)L_{hb}

Project: 2014.059.004 BY: YL 3/19/2014
Anchored Wingwall - Wingwall 4 CHK: SLV 3/24/14

Wingwall Stability Check:

Wall Height (high) =	9.26 ft	ϕ_{AB} =	34
Wall Height (low) =	1.83 ft	θ_{AB} =	90
Wall Length =	25.00 ft	δ_{AB} =	26
Unit Weight of Backfill, γ_{soil} =	140.00	$(Ka)_{AB}$ =	0.28
Unit Weight of Conc, γ_c =	150.00	ϕ_{BC} =	34
Broken Back slope β =	8.59 deg.	θ_{BC} =	120
Wall thickness =	10.00 in	δ_{BC} =	17
Bearing Resistance, ϕq_{ult} =	14100 psf	$(Ka)_{BC}$ =	0.10
Friction Coefficient μ =	0.54		

	Dist. To Anchor	Height at Anchor	Contributary width	Anchor type	Bearing Pressure	Stability Check
Anchor #1:	2.00 ft	9.02 ft	4.17 ft	C	3727	OK!
Anchor #2:	10.33 ft	6.42 ft	4.17 ft	B	2716	OK!
Anchor #3:	18.67 ft	3.81 ft	8.33 ft	B	1475	OK!
Anchor #4:	0.00 ft	0.00 ft	0.00 ft		NA	NA
Anchor #5:	0.00 ft	0.00 ft	0.00 ft		NA	NA

Anchor Type Data

Anchor Type	Length at Bottom Anchor	Anchor End	Total	Length at Top Anchor	Anchor End	Total
	(in)	(in)	(in)	(in)	(in)	(in)
B	16	8.08	24.08	41.375	8.08	49.455
C	28	8.08	36.08	53.375	8.08	61.455
D	40	8.08	48.08	65.375	8.08	73.455
E	52	8.08	60.08	77.375	8.08	85.455

Project: 2014.059.004
Anchored Wingwall - Wingwall 4

BY: YL 3/19/2014
CHK: SCW 3/24/14

Anchor #1 Stability Check

Soil Properties:

Active Earth Coeff., $(Ka)_{AB}$ =	0.282
Active Earth Coeff., $(Ka)_{ABH}$ =	0.254
Active Earth Coeff., $(Ka)_{ABV}$ =	0.121
Active Earth Coeff., $(Ka)_{BC}$ =	0.095
Active Earth Coeff., $(Ka)_{BCH}$ =	0.091
Active Earth Coeff., $(Ka)_{BCV}$ =	0.028

Load Factors:

	(overturning & sliding)	(Bearing Pressure)
EH =	1.50	1.5
EV =	1.00	1.35
DC =	0.90	1.5
LS =	1.75	1.75

Modification Factor = 1.00

Overturning Check:

Anchor Height =	9.02	ft
Design Wall Height, H =	11.58	ft
Anchor Type =	C	
Anchor Length at Top, L_{top} =	5.12	ft
Anchor Length at Bot., L_{bot} =	3.01	ft

Back slope $\beta 1$ = 26.57 deg.

Soil Pressure:

Horizontal (kah) :

Soil Pressure at A, σ_{LL} =	0	psf
Soil Pressure at B, σ_{Bab} =	287.83	psf
Soil Pressure at B, σ_{Bbc} =	103.04	psf
Soil Pressure at C, σ_{BOT} =	154.04	psf

Vertical (kav) :

Soil Pressure at A, σ_{LL} =	0	psf
Soil Pressure at B, σ_{Bab} =	137.29	psf
Soil Pressure at B, σ_{Bbc} =	-31.50	psf
Soil Pressure at C, σ_{BOT} =	-47.09	psf

Driving Forces:

Force $P_{Surcharge}$ =	0	lb/ft
Moment Arm, y_1 =	5.79	ft
Overturning Moment, DM1 =	0	ft-lb/ft
Force P_{ABH} =	1163	lb/ft
Moment Arm, y_2 =	6.19	ft
Overturning Moment, DM2 =	7203	ft-lb/ft
Force P_{BC1H} =	412	lb/ft
Moment Arm, y_3 =	1.50	ft
Overturning Moment, DM3 =	618	ft-lb/ft
Force P_{BC2H} =	102	lb/ft
Moment Arm, y_4 =	0.83	ft
Overturning Moment, DM4 =	85	ft-lb/ft

Resisting Forces:

Weight of Wall, Ww =	1128	lb/ft
Dist. From PT. O, X_1 =	0.42	ft
Resisting Moment, RM1 =	470	ft-lb/ft
Backslope Soil, I_A =	6.56	lb/ft
Dist. From PT. O, X_2 =	4.25	ft
Resisting Moment, RM2 =	28	ft-lb/ft
Soil Above Anchor, I_B =	3958	lb/ft
Dist. From PT. O, X_3 =	3.39	ft
Resisting Moment, RM3 =	13432	ft-lb/ft
Weight of Soil, II_A =	1142	lb/ft
Dist. From PT. O, X_4 =	1.999	ft
Resisting Moment, RM4 =	2283	ft-lb/ft

Project: 2014.059.004 BY: YL 3/19/2014
Anchored Wingwall - Wingwall 4 CHK: SLV 3/24/14

Anchor #1 Stability Check

Resisting Forces (Con't):

Weight of Soil, W_B =	684	lb/ft
Dist. From PT. O, X_5 =	4.095	ft
Resisting Moment, RM5 =	2799	ft-lb/ft
Force P_{ABV} =	555	lb/ft
Moment Arm, x6 =	5.95	ft
Resisting Moment, RM6 =	3303	ft-lb/ft
Force P_{BC1V} =	-126	lb/ft
Moment Arm, x7 =	4.56	ft
Resisting Moment, RM7 =	-575	ft-lb/ft
Force P_{BC2V} =	-31	lb/ft
Moment Arm, x8 =	4.09	ft
Resisting Moment, RM8 =	-128	ft-lb/ft

Location of Resultant Force:

x = 0.992 ft (note: 80% of soil weight used for overturning resist.)

e = 0.93 ft

Overturning Check: $= \sum V / (B-2e)$ EQ. 11.6.3.2-1

Footing Length, B = 3.84

1/4 B = 0.96 > e OK!

Bearing Check:

Locate resultant for bearing (uses 100% soil weight)

x = 1.348

e = 0.57

Beff = 2.70 ft

Factored Bearing Pressure = 3727 psf

Bearing Resistance, ϕq_{ult} = 14100 > Bearing Pressure OK!

Sliding Check:

Factored Sliding Force = 2516 ft-lb/ft

Factored Vertical Loads = 7202 ft-lb/ft

Sliding Resistance = 3889 ft-lb/ft OK!

Project: 2014.059.004
Anchored Wingwall - Wingwall 4

BY: YL 3/19/2014
CHK: SLV 3/24/14

Anchor #1 w/ Footing Stability Check

Soil Properties:

Active Earth Coeff., $(Ka)_{AB}$ =	0.282
Active Earth Coeff., $(Ka)_{ABH}$ =	0.254
Active Earth Coeff., $(Ka)_{ABV}$ =	0.121
Active Earth Coeff., $(Ka)_{BC}$ =	0.095
Active Earth Coeff., $(Ka)_{BCH}$ =	0.091
Active Earth Coeff., $(Ka)_{BCV}$ =	0.028

Load Factors:

	(overturning & sliding)	(Bearing Pressure)
EH =	1.50	1.5
EV =	1.00	1.35
DC =	0.90	1.5
LS =	1.75	1.75

Modification Factor = 1.00

Overturning Check:

Footing Information:

Toe =	1.08	ft
Footing Stem Width(thickness) =	10	in
Footing Heel =	1.08	ft
Footing Width =	2.99	ft
WW Stem Offset wrt Ftg Stem	0.00	in
FTG Stem Height =	0.00	ft
FTG Thickness =	23	in
Back slope β1 =	26.57	deg.

Anchor Height =	9.02	ft
Design Wall Height, H =	11.58	ft
Anchor Type =	C	
Anchor Length at Top, L_{top} =	5.12	ft
Anchor Length at Bot., L_{bot} =	3.01	ft

Soil Pressure:

Horizontal (kah) :

Soil Pressure at A, σ_{LL} =	0.00	psf
Soil Pressure at B, σ_{Bab} =	287.83	psf
Soil Pressure at B, σ_{Bbc} =	103.04	psf
Soil Pressure at C, σ_{BOT} =	154.04	psf
Soil Press. at top of ftg Stem =	412.49	psf
Soil Press. at Bottom of ftg =	480.76	psf

Vertical (kav) :

Soil Pressure at A, σ_{LL} =	0.00	psf
Soil Pressure at B, σ_{Bab} =	137.29	psf
Soil Pressure at B, σ_{Bbc} =	-31.50	psf
Soil Pressure at C, σ_{BOT} =	-47.09	psf
Soil Press. at top of ftg Stem =	196.75	psf
Soil Press. at Bottom of ftg =	229.31	psf

Driving Forces:

Force $P_{Surcharge}$ =	0	lb/ft
Moment Arm, y_1 =	6.75	ft
Overturning Moment, DM1 =	0	ft-lb/ft
Force P_{ABH} =	1163	lb/ft
Moment Arm, y_2 =	8.11	ft
Overturning Moment, DM2 =	9432	ft-lb/ft
Force P_{BC1H} =	412	lb/ft
Moment Arm, y_3 =	3.42	ft
Overturning Moment, DM3 =	1408	ft-lb/ft
Force P_{BC2H} =	102	lb/ft
Moment Arm, y_4 =	2.75	ft
Overturning Moment, DM4 =	281	ft-lb/ft

Resisting Forces:

Weight of Wall, Ww =	1128	lb/ft
Dist. From Ftg Toe, X_1 =	1.50	ft
Resisting Moment, RM1 =	1687	ft-lb/ft
Backslope Soil, I_A =	6.56	lb/ft
Dist. From Ftg Toe, X_2 =	5.33	ft
Resisting Moment, RM2 =	35	ft-lb/ft
Soil Above Anchor, I_B =	3958	lb/ft
Dist. From Ftg Toe, X_3 =	4.47	ft
Resisting Moment, RM3 =	17707	ft-lb/ft
Weight of Soil, II_A =	1142	lb/ft
Dist. From Ftg Toe, X_4 =	3.079	ft
Resisting Moment, RM4 =	3517	ft-lb/ft

Project: 2014.059.004
Anchored Wingwall - Wingwall 4

BY: YL 3/19/2014
CHK: SLJ 3/24/14

Anchor #1 w/ Footing Stability Check

Driving Forces (Con't):

Force P_{ftg} 1 =	791	lb/ft
Moment Arm, y_5 =	0.96	ft
Overturning Moment, DM5 =	758	ft-lb/ft
Force P_{ftg} 2 =	65	lb/ft
Moment Arm, y_6 =	0.64	ft
Overturning Moment, DM6 =	42	ft-lb/ft

Resisting Forces (Con't):

Weight of Soil, II_B =	684	lb/ft
Dist. From Ftg Toe, X_5 =	5.175	ft
Resisting Moment, RM5 =	3537	ft-lb/ft
Force P_{ABV} =	555	lb/ft
Moment Arm, x6 =	7.03	ft
Resisting Moment, RM6 =	3902	ft-lb/ft
Force P_{BC1V} =	-126	lb/ft
Moment Arm, x7 =	5.64	ft
Resisting Moment, RM7 =	-711	ft-lb/ft
Force P_{BC2V} =	-31	lb/ft
Moment Arm, x8 =	5.17	ft
Resisting Moment, RM8 =	-161	ft-lb/ft
Force P_{ftgV}=	408	lb/ft
Moment Arm, x9 =	2.99	ft
Resisting Moment, RM9 =	1222	ft-lb/ft
Footing Stem Weight =	0	lb/ft
Moment Arm, x10 =	1.50	ft
Resisting Moment, RM10 =	0	ft-lb/ft
Footing Weight =	860.5833333	lb/ft
Moment Arm, x11 =	1.50	ft
Resisting Moment, RM11 =	1288	ft-lb/ft
Soil Over Footing Heel Psoil =	0	lb/ft
Moment Arm, x12 =	2.45	ft
Resisting Moment, RM12 =	0	ft-lb/ft

Location of Resultant Force:

x = 1.230 ft (note: 80% of soil weight used for overturning resist.)

e = 1.23 ft

Overturning Check: = ∑ V / (B-2e) EQ. 11.6.3.2-1

Footing Length, B = 4.92

1/4 B = 1.23 < e N.G. SAY ok

Bearing Check:

Locate resultant for bearing (uses 100% soil weight)

x = 1.651 ft

e = 0.81 ft

Beff = 3.30 ft

Factored Bearing Pressure = 3600 psf

Bearing Resistance, ϕq_{ult} = 14100 > Bearing Pressure OK!

Sliding Check:

Factored Sliding Force = 3800 ft-lb/ft

Factored Vertical Loads = 8385 ft-lb/ft

Sliding Resistance = 4528 ft-lb/ft OK!

Project: 2014.059.004
Anchored Wingwall - Wingwall 4

BY: YL 3/19/2014
CHK: SLV 3/24/14

Anchor #2 Stability Check

Soil Properties:		Load Factors:	(overturning & sliding)	(Bearing Pressure)
Active Earth Coeff., $(Ka)_{AB}$ =	0.282	EH =	1.50	1.5
Active Earth Coeff., $(Ka)_{ABH}$ =	0.254	EV =	1.00	1.35
Active Earth Coeff., $(Ka)_{ABV}$ =	0.121	DC =	0.90	1.5
Active Earth Coeff., $(Ka)_{BC}$ =	0.095	LS =	1.75	1.75
Active Earth Coeff., $(Ka)_{BCH}$ =	0.091			
Active Earth Coeff., $(Ka)_{BCV}$ =	0.028	Modification Factor =	1.00	

Overturning Check:

Anchor Height = 6.42 ft
Design Wall Height, H = 8.48 ft
Anchor Type = B
Anchor Length at Top, L_{top} = 4.12 ft
Anchor Length at Bot., $L_{bot.}$ = 2.01 ft

Back slope $\beta 1$ = 26.57 deg.

Soil Pressure:

Horizontal (kah) :			Vertical (kav) :		
Soil Pressure at A, σ_{LL} =	0	psf	Soil Pressure at A, σ_{LL} =	0	psf
Soil Pressure at B, σ_{Bab} =	177.41	psf	Soil Pressure at B, σ_{Bab} =	84.62	psf
Soil Pressure at B, σ_{Bbc} =	63.51	psf	Soil Pressure at B, σ_{Bbc} =	-19.42	psf
Soil Pressure at C, σ_{BOT} =	114.51	psf	Soil Pressure at C, σ_{BOT} =	-35.01	psf

Driving Forces:			Resisting Forces:		
Force $P_{Surcharge}$ =	0	lb/ft	Weight of Wall, Ww =	803	lb/ft
Moment Arm, y_1 =	4.24	ft	Dist. From PT. O, X_1 =	0.42	ft
Overturning Moment, DM1 =	0	ft-lb/ft	Resisting Moment, RM1 =	334	ft-lb/ft
Force P_{ABH} =	442	lb/ft	Backslope Soil, I_A =	4.25	lb/ft
Moment Arm, y_2 =	5.16	ft	Dist. From PT. O, X_2 =	3.58	ft
Overturning Moment, DM2 =	2280	ft-lb/ft	Resisting Moment, RM2 =	15	ft-lb/ft
Force P_{BC1H} =	254	lb/ft	Soil Above Anchor, I_B =	1685	lb/ft
Moment Arm, y_3 =	1.50	ft	Dist. From PT. O, X_3 =	2.89	ft
Overturning Moment, DM3 =	381	ft-lb/ft	Resisting Moment, RM3 =	4876	ft-lb/ft
Force P_{BC2H} =	102	lb/ft	Weight of Soil, II_A =	652	lb/ft
Moment Arm, y_4 =	0.83	ft	Dist. From PT. O, X_4 =	1.499	ft
Overturning Moment, DM4 =	85	ft-lb/ft	Resisting Moment, RM4 =	978	ft-lb/ft

Project: 2014.059.004
Anchored Wingwall - Wingwall 4

BY: YL 3/19/2014
CHK: SCV 3/29/14

Anchor #2 Stability Check

Resisting Forces (Con't):

Weight of Soil, W_B =	684	lb/ft
Dist. From PT. O, X_5 =	3.095	ft
Resisting Moment, RM5 =	2115	ft-lb/ft
Force P_{ABV} =	211	lb/ft
Moment Arm, x6 =	4.95	ft
Resisting Moment, RM6 =	1044	ft-lb/ft
Force P_{BC1V} =	-78	lb/ft
Moment Arm, x7 =	3.56	ft
Resisting Moment, RM7 =	-276	ft-lb/ft
Force P_{BC2V} =	-31	lb/ft
Moment Arm, x8 =	3.09	ft
Resisting Moment, RM8 =	-97	ft-lb/ft

Location of Resultant Force:

x = 0.999 ft (note: 80% of soil weight used for overturning resist.)

e = 0.42 ft

Overturning Check: $= \sum V / (B-2e)$ EQ. 11.6.3.2-1

Footing Length, B = 2.84

1/4 B = 0.71 > e OK!

Bearing Check:

Bearing Pressures:

Factored Bearing Pressure = 2716 psf

Bearing Resistance, ϕq_{ult} = 14100 > Bearing Pressure OK!

Sliding Check:

Factored Sliding Force = 1197 ft-lb/ft

Factored Vertical Loads = 3849 ft-lb/ft

Sliding Resistance = 2078 ft-lb/ft OK!

Project: 2014.059.004 BY: YL 3/19/2014
Anchored Wingwall - Wingwall 4 CHK: SLJ 3/24/14

Anchor #3 Stability Check

Soil Properties:		Load Factors:	(overturning & sliding)	(Bearing Pressure)
Active Earth Coeff., $(Ka)_{AB}$ =	0.282	EH =	1.50	1.5
Active Earth Coeff., $(Ka)_{ABH}$ =	0.254	EV =	1.00	1.35
Active Earth Coeff., $(Ka)_{ABV}$ =	0.121	DC =	0.90	1.5
Active Earth Coeff., $(Ka)_{BC}$ =	0.095	LS =	1.75	1.75
Active Earth Coeff., $(Ka)_{BCH}$ =	0.091			
Active Earth Coeff., $(Ka)_{BCV}$ =	0.028	Modification Factor =	0.66	

Overturning Check:

Anchor Height = 3.81 ft
Design Wall Height, H = 5.87 ft
Anchor Type = B
Anchor Length at Top, L_{top} = 4.12 ft
Anchor Length at Bot., $L_{bot.}$ = 2.01 ft

Back slope $\beta 1$ = 26.57 deg.

Soil Pressure:

Horizontal (kah) :			Vertical (kav) :		
Soil Pressure at A, σ_{LL} =	0	psf	Soil Pressure at A, σ_{LL} =	0	psf
Soil Pressure at B, σ_{Bab} =	84.45	psf	Soil Pressure at B, σ_{Bab} =	40.28	psf
Soil Pressure at B, σ_{Bbc} =	30.23	psf	Soil Pressure at B, σ_{Bbc} =	-9.24	psf
Soil Pressure at C, σ_{BOT} =	81.23	psf	Soil Pressure at C, σ_{BOT} =	-24.84	psf

Driving Forces:			Resisting Forces:		
Force $P_{Surcharge}$ =	0	lb/ft	Weight of Wall, Ww =	476	lb/ft
Moment Arm, y_1 =	2.94	ft	Dist. From PT. O, X_1 =	0.42	ft
Overturning Moment, DM1 =	0	ft-lb/ft	Resisting Moment, RM1 =	198	ft-lb/ft
Force P_{ABH} =	100	lb/ft	Backslope Soil, I_A =	4.25	lb/ft
Moment Arm, y_2 =	4.29	ft	Dist. From PT. O, X_2 =	3.58	ft
Overturning Moment, DM2 =	430	ft-lb/ft	Resisting Moment, RM2 =	15	ft-lb/ft
Force P_{BC1H} =	121	lb/ft	Soil Above Anchor, I_B =	179	lb/ft
Moment Arm, y_3 =	1.50	ft	Dist. From PT. O, X_3 =	2.89	ft
Overturning Moment, DM3 =	181	ft-lb/ft	Resisting Moment, RM3 =	518	ft-lb/ft
Force P_{BC2H} =	102	lb/ft	Weight of Soil, II_A =	652	lb/ft
Moment Arm, y_4 =	0.83	ft	Dist. From PT. O, X_4 =	1.499	ft
Overturning Moment, DM4 =	85	ft-lb/ft	Resisting Moment, RM4 =	978	ft-lb/ft

Project: 2014.059.004 BY: YL 3/19/2014
Anchored Wingwall - Wingwall 4 CHK: SLU 3/24/14

Anchor #3 Stability Check

Resisting Forces (Con't):

Weight of Soil, II_B =	684	lb/ft
Dist. From PT. O, X_5 =	3.095	ft
Resisting Moment, RM5 =	2115	ft-lb/ft
Force P_{ABV} =	48	lb/ft
Moment Arm, x6 =	4.95	ft
Resisting Moment, RM6 =	237	ft-lb/ft
Force P_{BC1V} =	-37	lb/ft
Moment Arm, x7 =	3.56	ft
Resisting Moment, RM7 =	-132	ft-lb/ft
Force P_{BC2V} =	-31	lb/ft
Moment Arm, x8 =	3.09	ft
Resisting Moment, RM8 =	-97	ft-lb/ft

Location of Resultant Force:

x = 0.928 ft (note: 80% of soil weight used for overturning resist.)
e = 0.49 ft

Overturning Check: $= \sum V / (B-2e)$ EQ. 11.6.3.2-1

Footing Length, B = 2.84
1/4 B = 0.71 > e OK!

Bearing Check:

Bearing Pressures:

Factored Bearing Pressure = 1475 psf
Bearing Resistance, ϕq_{ult} = 14100 > Bearing Pressure OK!

Sliding Check:

Factored Sliding Force = 485 ft-lb/ft
Factored Vertical Loads = 1927 ft-lb/ft
Sliding Resistance = 1041 ft-lb/ft OK!

Project: 2014.059.004 BY: YL 5/20/2014
Anchored Wingwall - Wingwall 4 CHK: RA 5-20-14

Check Bending in Wall - Vertical Bars

Assumptions: 1.) Wall stem is cantileverd from anchor.
2.) Use active earth pressure because wall is free to rotate.
3.) Critical Wall section will be at maximum horizontal load, at tallest anchor section.

Modification Factor = 1

Data:

H_{max} =	11.58	ft
h_{max} =	8.08	ft
LL surcharge, V_{LS} =	0.000	ksf
γ_{soil} =	0.140	ksf
K_a =	0.28	
δ =	25.5	
f'c =	5	ksi
fy =	60	ksi
Vertical Bars Size:	# 4	
Spacing:	10	in

Find the horizontal load:

$$P_{soil} = (1/2)\gamma_S K_A h_{max}^2 (\cos\delta) = 1.16 \text{ kip/ft}$$
$$P_{LS} = \sigma_{LS} K_A h_{max} (\cos\delta) = 0.00 \text{ kip/ft}$$

Load Factors: EH = 1.50
LS = 1.75

Factored Loads:

Mu =EH(P_{soil})(h_{max}/3) + LS(P_{LS})(h_{max}/2) = **4.70 kip-ft/ft**
Vu =EH(P_{soil})+LS(P_{LS}) = **1.74 kip/ft**

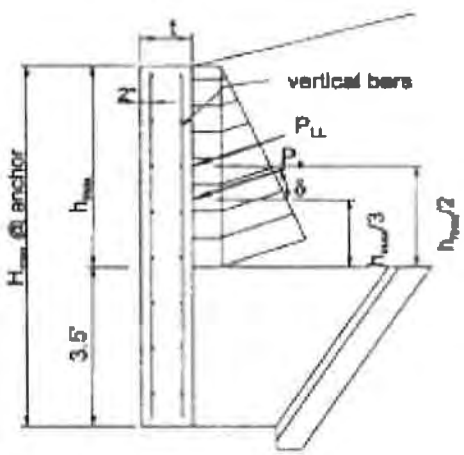

Moment Capacity:

As prov. :	0.236	in^2
d (in):	7.75	d = t - 2" cov. - 1/2 Bar ϕ
a (in):	0.277	a=As*fy/(0.85*b*f'c)
ϕMn (kip-ft):	**8.07**	ϕMn = 0.90*As*fy*(d-a/2)/12
ϕMn	>	Mu **OK!**

Shear Capacity Check

ϕVn (kip):	**11.83**	ϕVn = 0.90*β*√f'c*b*d
β = 2.00		
ϕVn	>	Vu **OK!**

Crack Control Check

Ma = 3.13 **kip-ft/ft**
γe= 0.75
ρn = 0.018054 dc= 1.75in

$$E_c = 1820 \bullet \sqrt{f'c} = 4070\text{ksi}$$

$$E_s = 29000\text{ksi} \qquad k = \sqrt{2\rho n + \rho n^2} - \rho n = 0.173$$

$$n = E_s / E_c = 7.13 \qquad j = 1 - (k/3) = 0.942$$

$$f_s = (M)/(A_s jd) = 21.85 \text{ ksi}$$

Bs=1+dc/(0.7*(h-dc))= 1.32
max spa ≤ [(700γe) / (βsfs)] - 2dc = 15 in **OK!**

Project: 2014.059.004 BY: YL 3/19/2014
Anchored Wingwall - Wingwall 4 CHK: SLU 3/24/14

Check Anchor Attachment

Assumptions: 1.) Only top three connection bars, represented by T1, T2 & T3 in sketch below, will resist tension.
2.) Assume min. steel will control, design for 1.33 Mu (See ART. 5.7.3.3.2)

Anchor #1 $M_{D\,DL}$=	32.97 kip-ft	Anchor #1 $M_{D\,LS}$=	0 kip-ft
Anchor #2 $M_{D\,DL}$=	11.45 kip-ft	Anchor #2 $M_{D\,LS}$=	0 kip-ft
Anchor #3 $M_{D\,DL}$=	5.80 kip-ft	Anchor #3 $M_{D\,LS}$=	0 kip-ft

Modification Factor = 1.00

Data:

Max. $M_{D\,DL}$ =	32.97 kip-ft
Max. $M_{D\,LS}$ =	0.00 kip-ft
f'c =	5 ksi
fy =	60 ksi
Connection Bars Size:	# 5

Load Factors: EH = 1.50
LS= 1.75

Factored Loads:

1.33 Mu = 1.33(EH($M_{D\,DL}$) + LS($M_{D\,LS}$)) = **65.78 kip-ft**

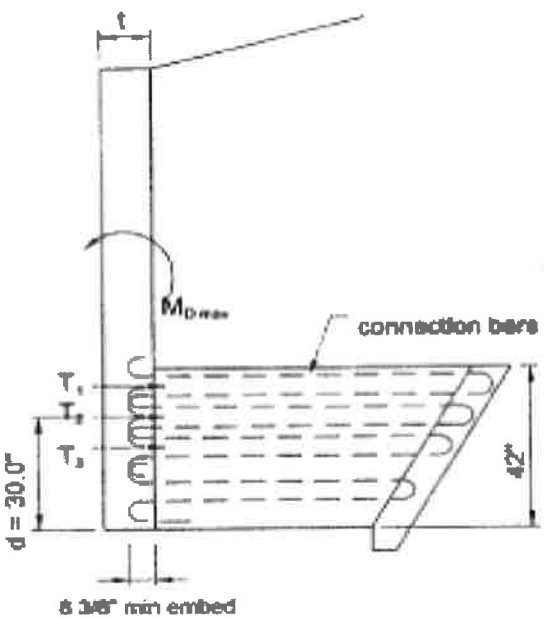

Moment Capacity:

As prov. :	1.841	in^2	(6 Bars)
d (in):	30.00		
b (in):	6.00		
a (in):	4.331	a=As*fy/(0.85*b*f'c)	
ϕMn (kip-ft):	**230.57**	ϕMn = 0.90*As*fy*(d-a/2)/12	
ϕMn	>	Mu	**OK!**

Check Hook Development:

db (in): 0.625

ART 5.11.2.4

L_{hb} (in):	10.62	<-- Controls
or		
8db (in):	5.00	
or		
6in min:	6.00	

L_{dh} (in): 7.43 =(0.7)L_{hb}

DELTA
ENGINEERS, ARCHITECTS, & LAND SURVEYORS
860 Hooper Road, Endwell, NY 13760
www.deltaengineers.com
Phone: (607) 231-6600
Fax: (607) 231-6650

JOB	2014.059.004		
DESCRIPTION	28'x10' ARCH		
SHEET NO.	OF	SCALE	
CALCULATED BY	YL	DATE	3/19/2014
CHECKED BY	SLW	DATE	3/24/14

AN ISO 9001:2008 CERTIFIED COMPANY

CHECK ANCHORED WINGWALL REAR FACE HORIZONTAL REINFORCING FOR WW3C & WW4C

WW3C CANTILEVER — 7.5' — CONTROLS

WW4C CANTILEVER — 6.33'

DESIGN FOR 40pcf EFP. $\times \left[2.16' + \frac{2}{3}(5.11 - 2.16')\right] = 165$ psf

$M_a = 165 \times \frac{7.5^2}{2} = 4.64$ k-ft/ft

$M_u = 1.5 \times 4.64 = 6.96$ k-ft/ft

$V_u = 1.5 \times 165 \times 7.5 = 1.86$ k/ft

USE #4 @ 8" o.c. REAR FACE HORIZONTAL REINFORCING. SEE ATTACHED.

DELTA
ENGINEERS, ARCHITECTS, & LAND SURVEYORS
860 Hooper Road, Endwell, NY 13760
www.deltaengineers.com
Phone: (607) 231-6600
Fax: (607) 231-6650

JOB	2014.059.004		
DESCIPTION	28'x10' Arch		
SHEET NO	OF	SCALE	
CALCULATED BY	YL	DATE	5/20/2014
CHECKED BY	RA	DATE	5-20-14

Anchored WW R.F. Horizontal Bar

Limit State: Strength 1

MATERIAL PROPERTIES:

1 Concrete Strength, F'c	5	ksi
2 Reinforcing Steel Yield, Fy	60	ksi
3 Concrete Unit Weight	150	pcf
4 Soil Unit Weight	140	pcf

Member Design Width b = 12.00 in
Member Thickness Ts = 10.00 in
Bar Cover = 2.63 in
Bar Size = 4
de=Ts-Cov-Bar Size/2 = 7.12 in

Ec = 57000 * √f'c = 4031 ksi
Es = 29000 ksi
n = Es / Ec = 7.20
0.65 < β1 < 0.85 = 0.80

$$\rho_b = \frac{0.85\beta_1 \bullet f'c}{f_y} \bullet \left[\frac{87{,}000}{87{,}000 + f_y}\right] = 0.0335$$

fr = .37 * √f'c = 0.83 ksi

Unfactored Moment, Ma = 4.64 kip-ft
Design Ultimate Moment, Mu = 6.96 kip-ft
Ultimate Shear, Vu = 1.86 kips

Capacity Reduction Factors
Moment, ΦM = 0.9
(ϕ_M=0.65+0.15(d/c-1), 0.75min, 0.9max, Eqn. 5.5.4.2.1-2)
Shear, ΦV = 0.9
β = 2.0

dv = Greater of .72h or 0.9 de = 7.2 in
Vc=ϕ(0.0316)β√f'c*b*dv= 10.99 kips/ft **> Vu OK**

$$\rho = \left[1 - \left(\sqrt{1 - \frac{2 \bullet M_u}{\phi b d^2 \bullet .85 f'c}}\right)\right] \bullet \frac{.85 f'c}{f_y} = 0.00259$$

Steel Area Req'd; As =ρ * b * d = 0.221 in^2/ft
Use #4 Bar @ 8.00 in oc
As Prov = 0.29 in^2/ft
ρ Prov = 0.00345 **OK**
Check Min As > 1.33 AsReq **OK**
φMn = φAsfy(de-a/2)/12 = 9.207 kip-ft **OK**

Check c/d Ratio: (Art. 5.7.2.1)
c=As*Fy/.85*f'c*β1*b = 0.433 in
c/de ≤ 0.6; c/de = 0.061 OK, Use Fy
a = β_1c = 0.346 in
Ig = $bt^3/12$ = 1000 in^4
y_t = T/2 = 5.00 in
Mcr = fr*(Ig / yt) = 13.79 kip-ft
1.2Mcr= 16.55 kip-ft

CHECK CRACKING

$$k = \sqrt{2\rho n + (\rho n)^2} - \rho n = 0.199$$

j = 1 - (k/3) = 0.934
fs = Ma/(As*j*d) = 28.44 ksi
max spa ≤ [(700γe) / (βsfs)] - 2dc = 9 in **OK**

dc= 2.25 in
Bs=1+dc/(0.7*(h-dc))= 1.415
γe= 0.75

DELTA
ENGINEERS, ARCHITECTS, & LAND SURVEYORS
860 Hooper Road
Endwell, New York 13760
(607) 231-6600 Fax 231-6650

JOB	2014.059.004		106
DESCIPTION	28'x10' Arch - Attached Headwall		
SHEET NO	OF	SCALE	
CALCULATED BY	YL	DATE	3/20/2014
CHECKED BY	SLJ	DATE	3/24/14

Design Code: AASHTO LRFD 5th Edition

Soil Zones	Ret	Fdtn	Agg
Soil Density (pcf)=	140	140	140
Soil Friction Angle (Phi)=	34.0°	34.0°	34.0°

Interface Friction Angle (delta) =	0.0°	
Back slope angle (beta)=	0.0°	
Backslope distance (x) =	0.00	ft
Broken backslope angle (beta')=	0.0°	
Slope - Back face of wall=	0.0°	
Water Table Height, (ft) =	6.40	

W_{conc} 150 pcf
Cohesion 0 psf
Embedment 0.00 ft

Coulomb 'C' or Rankine 'R'	R	
Calculate Strength Bearing Pressure "Y" or "N"	Y	
Backslope Continuous 'C' or Broken 'B'	C	
Distance to Level Grade	0	ft
Specified Service Brg. Press (psf)	3000	
Specified Strength Brg. Press (psf)	NA	

*Given Sliding Coefficient 0.440

Allowable Bearing (Strength) 1293 psf assumed
(Service) 3000 psf

Ka= 0.283
KaH= 0.283 EP(H)= 39.58
KaV= 0.000 EP(V)= 0.00

Bearing Coefficients

Nq	Nγ	Nc	Qult	
29.43	41.06	42.15	2874	psf

*Stem Height, hs=	4.57	ft
Stem Projection Above Grade =	0.00	in
Stem Thickness, ts=	12.00	in
Base Thickness, tb=	0.00	in
Toe Width, lt=	0.00	ft
Heel Width, lh=	0.00	ft
Surcharge, hsc=	2.00	ft

* (5.11' − 3.49')⅔ + 3.49' = 4.57'

Design Wall Height-Ht= 4.57 ft
Total Base Width Lb= 1.00 ft
Height at back of soil wedge Hw = 4.57 ft
Stem Des Hgt 4.57 ft
Wedge hgt 0.00 ft

Load Factors

Limit State	Str 1-a	Str 1-b	Str IV	Service
EH	1.50	1.50	1.50	1.00
LS	1.75	1.75	0.00	1.00
EV	1.00	1.35	1.35	1.00
DC	0.90	1.25	1.50	1.00

Resistance Factors

Table 10.5.5.2.2-1	Sliding	0.90	0.90	0.90	1.00
	Bearing	0.45	0.45	0.45	0.33
5.5.4.2.1	Moment	0.90			
	Shear	0.90			

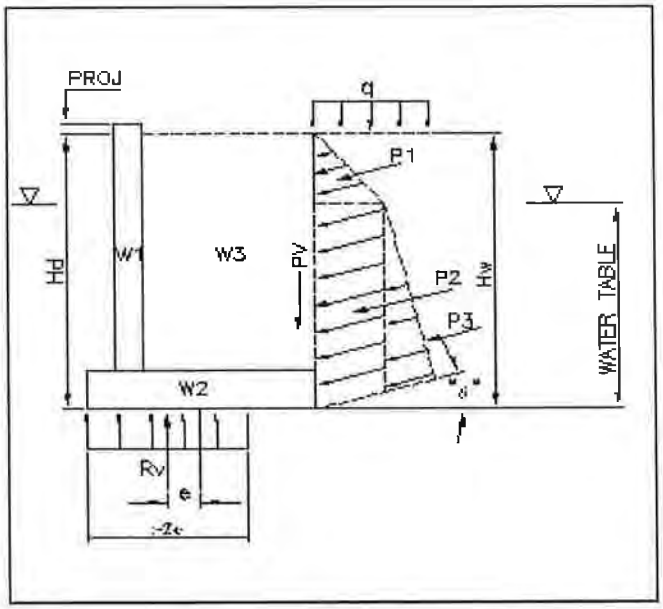

Wall Pressure Diagram

DELTA
ENGINEERS, ARCHITECTS, & LAND SURVEYORS
860 Hooper Road
Endwell, New York 13760
(607) 231-6600 Fax 231-6650

JOB	2014.059.004		
DESCIPTION	28'x10' Arch - Attached Headwall		
SHEET NO	OF	SCALE	
CALCULATED BY	YL	DATE	5/20/2014
CHECKED BY	RA	DATE	5-20-14

Stem Design

MATERIAL PROPERTIES:

1 Concrete Strength, F'c	5.0	ksi
2 Reinforcing Steel Yield, Fy	60	ksi
3 Concrete Unit Weight	150	pcf
4 Soil Unit Weight	140	pcf

Member Design Width b =	12.00	in
Member Thickness Ts =	12.00	in
Bar Cover =	2.00	in
Bar Size =	4	
de=Ts-Cov-Bar Size/2 =	9.75	in

5.4.2.4 $E_c = 1820 \bullet \sqrt{f'c} =$ 4070 ksi

$E_s =$ 29000 ksi

$n = E_s / E_c =$ 7.13

$0.65 < \beta_1 < 0.85 =$ 0.80

$f_r = 0.37\sqrt{f'c} =$ 0.83 ksi 5.4.2.6

Moment due to Surcharge, Mq =	0.83	kip-ft
Moment due to Active Soil, Mp=	0.63	kip-ft
Design Ultimate Moment, Mu =	2.39	kip-ft
Ultimate Shear, Vu =	1.25	kips

Capacity Reduction Factors

Moment, ΦM =	0.90
Shear, ΦS =	0.90

dv = Greater of .72h or 0.9 de = 8.775 in 5.8.2.9 βv = 2.0 5.8.3.4

ϕVc=ϕ(0.0316)βv√f'c*b*dv= 13.39 kips/ft **> Vu OK** 5.8.3.4 & 5.8.2.4

$$\rho = \left[1 - \left(\sqrt{1 - \frac{2 \bullet M_u}{\phi b d^2 \bullet .85 f'c}}\right)\right] \bullet \frac{.85 f'c}{f_y} = 0.00047$$

Steel Area Req'd; As =ρ * b * d = 0.0547 in^2/ft

Use #4 Bar @ 12.00 in oc

As Prov = 0.20 in^2/ft

ρ Prov = 0.00168

Check Min As > 1.33 AsReq OK

φMn = φAsfy(de-a/2)/12 = 8.5128 kip-ft **OK**

c=As*Fy/.85*f'c*β1*b = 0.289 in 5.7.3.1.2

c/de ≤ 0.6; c/de = 0.03 OK 5.7.2.1

a = β_1c = 0.231 in

Ig = $bt^3/12$ = 1728 in^4

y_t = T/2 = 6.00 in

Mcr = fr*(Ig / yt) = 19.86 kip-ft

1.2Mcr= 23.83 kip-ft

CHECK CRACKING

$k = \sqrt{2\rho n + (\rho n)^2} - \rho n =$ 0.1432

$j = 1 - (k/3) =$ 0.952

$f_s = (M)/(A_s jd) =$ 9.5855 ksi

max spa ≤ [(700γe) / (βsfs)] - 2dc = 37 in

dc= 2.25 in

Bs=1+dc/(0.7*(h-dc))= 1.33

γe= 0.75

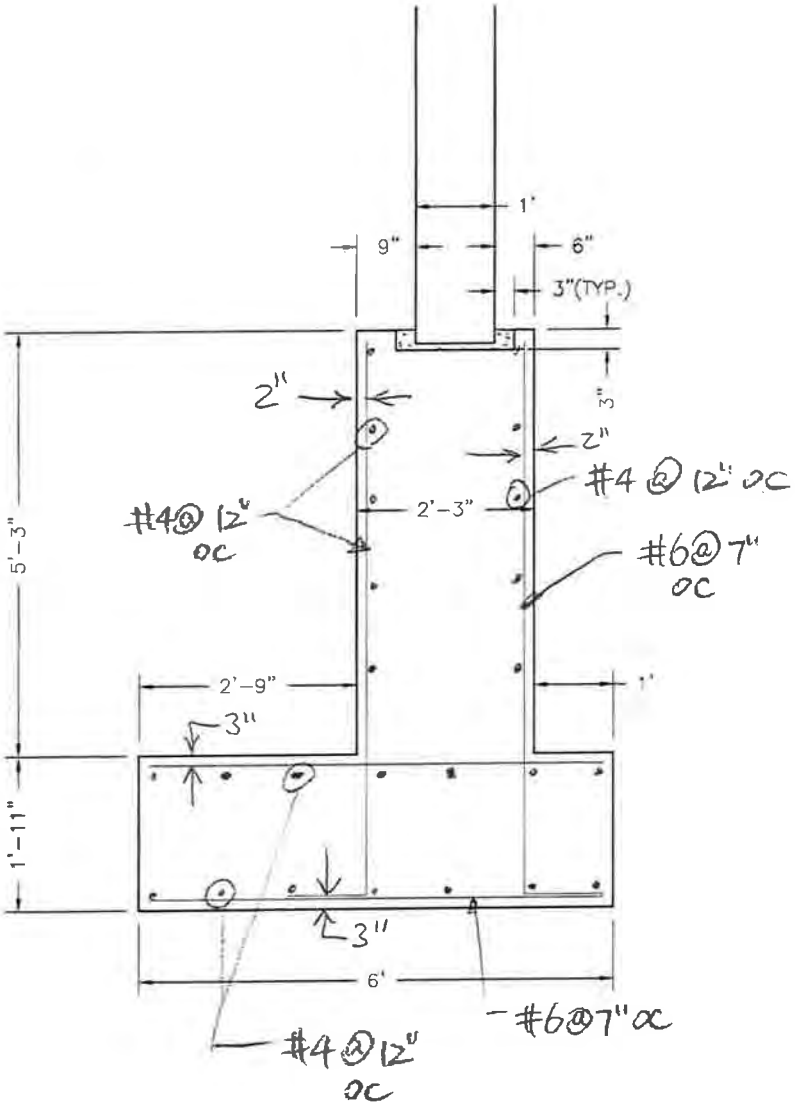

CHANNEL

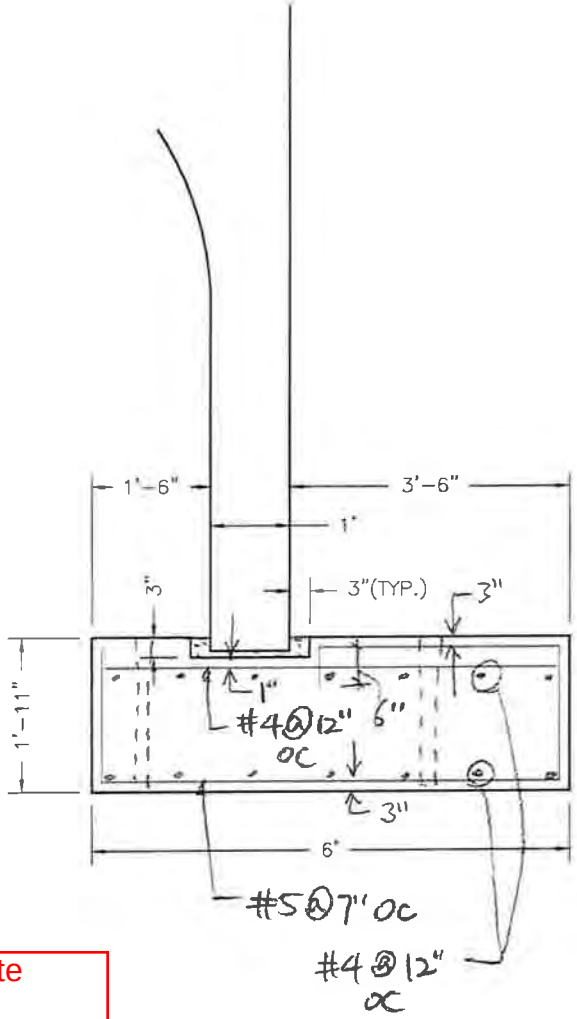

Verify Concrete cover, shown correctly in sketches

PRECAST FOOTING

1½" CONC. COV.

5,000 PSI CONC.

5-20-14

DELTA
ENGINEERS, ARCHITECTS, & LAND SURVEYORS
860 Hooper Road, Endwell, NY 13760
www.deltaengineers.com
Phone: (607) 231-6600
Fax: (607) 231-6650

JOB	2014.059.004		
DESCIPTION	28'x10' Arch		
SHEET NO.	OF	SCALE	
CALCULATED	YL	DATE	3/17/2014
CHECKED BY	SLJ	DATE	3/24/14

Cande Reaction Results Summary (service)

IM = 24.75%

	Case 1		Case 2		Case 3		Case 4	
	V (lb/in)	H (lb/in)	V (lb/in)	H (lb/in)	V (lb/in)	H (lb/in)	V (lb/in)	H (lb/in)
DC	290.42	-95.19	290.42	-95.19	290.42	-95.19	290.42	-95.19
DC+EH	327.92	-72.27	327.92	-72.27	327.92	-72.27	327.92	-72.27
DC+EV+EH	955.67	-226.4	955.67	-226.4	955.67	-226.4	955.67	-226.4
DC+EV+EH+LLIM	1361.9	-454.22	1685.1	-558.52	1556.3	-561.96	2085.5	-715.45
DC+EV+EH+LLIM+FWS	1409.2	-469.42	1732.8	-574	1603.3	-577.36	2132.7	-731.24
EH	37.5	22.92	37.5	22.92	37.5	22.92	37.5	22.92
EV	627.75	-154.13	627.75	-154.13	627.75	-154.13	627.75	-154.13
LL	325.635	-182.62	584.713	-266.23	481.467	-268.99	905.675	-392.02
FWS	47.3	-15.2	47.7	-15.48	47	-15.4	47.2	-15.79

	Case 1		Case 2		Case 3		Case 4	
	V (k/ft)	H (k/ft)	V (k/ft)	H (k/ft)	V (k/ft)	H (k/ft)	V (k/ft)	H (k/ft)
DC	3.49	-1.14	3.49	-1.14	3.49	-1.14	3.49	-1.14
EH	0.45	0.28	0.45	0.28	0.45	0.28	0.45	0.28
EV	7.53	-1.85	7.53	-1.85	7.53	-1.85	7.53	-1.85
LL	3.91	-2.19	7.02	-3.19	5.78	-3.23	10.87	-4.70
FWS	0.57	-0.18	0.57	-0.19	0.56	-0.18	0.57	-0.19

CASE 1 AND CASE 4 CONTROLLS BY INSPECTION.

28x10c1REC.out

```
*** WELCOME TO CANDE-2013(version 3/1/2013) ***

MASTER CONTROL AND PIPE-TYPE DATA FOR PROBLEM #  1

        USER TITLE: 28x8C1

        EXECUTION MODE ..................   ANALYS

        SOLUTION LEVEL ..................  #2 AUTO

        METHODOLOGY (LRFD OR SERVICE) ...     LRFD

        NUMBER OF PIPE-ELEMENT GROUPS ....       1

        MAXIMUM ITERATIONS PER STEP ......      30


        CULVERT PIPE-TYPE ............... CONCRETE

        CANNED MESH CODE # ..............        3

        NUMBER OF BEAM ELEMENTS .........       19

        CONCRETE MATERIAL PROPERTIES ARE AS FOLLOWS

             COMPRESSION STRENGTH (psi)..........       6500.000

             ELASTIC YOUNGS MODULUS (psi)........    4595487.000

             POISSON RATIO ......................          0.170

             CONCRETE DENSITY (pcf) .............        150.000

             INITIAL TENSILE CRACKING STRAIN.....       0.000010

             INITIAL COMPRESSION YIELD STRAIN....       0.000687

             INITIAL COMPRESSION CRUSH STRAIN ...       0.002000

             SHEAR STRENGTH MODEL (NSHEAR) # ...          1
             (VARIABLE STRENGTH MODEL PRINTED IN OUTPUT)

             CONCRETE CRACK-WIDTH MODEL NAME.....   HEGER-McGRATH
             (DRIVEN BY TENSILE STRAIN IN STEEL)

        STEEL REINFORCEMENT MATERIAL PROPERTIES

             TYPE OF STEEL CAGES (RSHAPE) .......     ARBIT

             STEEL YIELD STRENGTH (psi)..........      60000.000

             STEEL ELASTIC MODULUS (psi).........   29000000.000
```

28x10c1REC.out

STEEL POISSON RATIO 0.300000

STEEL YIELDING STRAIN 0.001883

NONLINEAR MODELING CODE (1,2,3) 3

STEEL-BASED CRACKWIDTH PREDICTION PARAMETERS

REBAR SPACING INNER ROW (SLI), (in)	4.00
REBAR SPACING OUTER ROW (SLO), (in)	4.00
NUMBER OF STEEL LAYERS FOR INNER CAGE	1
NUMBER OF STEEL LAYERS FOR OUTER CAGE	1
HEGER-MCGRATH CODE NUMBER FOR STEEL TYPE..	3

WALL THICKNESS, REBAR AREAS AND COVER DEPTHS

WALL-THICK	INNER-REBAR	OUTER-REBAR	INNER-COVER	OUTER COVER
10.0000	0.1980	0.0750	2.0000	2.4375
10.0000	0.1980	0.0750	2.0000	2.4375
10.0000	0.1980	0.0750	2.0000	2.4375
10.0000	0.1980	0.0750	2.0000	2.4375
10.0000	0.1980	0.0750	2.0000	2.4375
10.0000	0.1980	0.0750	2.0000	2.4375
10.0630	0.1980	0.0750	2.0000	2.4375
10.0630	0.1980	0.0750	2.0000	2.4375
10.0630	0.1100	0.1500	2.0000	2.4375
10.6250	0.1100	0.1500	2.0000	2.4375
12.3130	0.1100	0.1500	2.0000	2.4375
15.1250	0.1100	0.1500	2.0000	2.4375
19.1250	0.1100	0.1500	2.0000	2.4375
27.0000	0.1100	0.1500	2.0000	2.4375
18.3130	0.1100	0.1500	2.0000	2.4375
13.5630	0.1100	0.1500	2.0000	2.4375
12.0000	0.1100	0.1500	2.0000	2.4375
12.0000	0.0500	0.1500	2.0000	2.4375
12.0000	0.0500	0.1500	2.0000	2.4375
12.0000	0.0500	0.1500	2.0000	2.4375

LRFD RESISTANCE FACTORS FOR STRENGTH-LIMIT STATES
AND CRACK-WIDTH LIMIT AT SERVICE LOAD

YIELDING OF REINFORCEMENT STEEL	1.000
CRUSHING OF CONCRETE OUTER FIBER.....	0.750
SHEARING FAILURE OF CONCRETE	0.900
SPLITTING OF CONCRETE IN RADIAL TENSION	0.900
ALLOWABLE CRACKWIDTH SERVICE LOAD (inch)....	0.010

LARGE DEFORMATION/BUCKLING CODE, IBUCK = 0
IBUCK=0, MEANS SMALL DEFORMATION THEORY FOR GROUP
AND NO BUCKLING PREDICTION.

28x10c1REC.out

```
- - - - - - - - - - - - - - - - - - - - - - - - - - - - - - - - - - - - - - - -


 REVIEW SYSTEM INPUT DATA


 LEVEL-2 DATA FOR ARCH-TYPE CANNED MESH


    *** MESH PARAMETERS ***
     TYPE OF MESH ------------------------------------- TREN
     DEPTH OF TRENCH ABOVE FOOTING LEVEL (FT) ---------   12.42
     WIDTH OF TRENCH AT FOOTING LEVEL (FT) ------------    5.00
     SLOPE OF TRENCH WALL (H/V) -----------------------    0.00
     MESH SPACING PARAMETER ---------------------------    1.00
     TOTAL SOIL HEIGHT ABOVE CROWN (FT) ---------------    2.00
     MESH HEIGHT ABOVE CROWN (FT) ----------------------    2.00
     SOIL DENSITY ABOVE MESH (PCF) --------------------  140.00
     NUMBER OF ELEMENT LAYERS ABOVE CROWN -------------    3


*** ARCH PARAMETERS ***
     CENTERLINE RISE OF ARCH (IN) ----------------------  125.00
     BOTTOM HALF SPAN OF ARCH (IN) ---------------------  174.00
     SIDE RISE OF ARCH ABOVE FOOTING (IN) -------------   50.94
     FOOTING DEPTH (IN) --------------------------------   24.00
     OUTSIDE FOOTING WIDTH (IN) ------------------------   30.00
     INSIDE FOOTING WIDTH (IN) -------------------------   30.00
     NUMBER OF ARCH SEGMENTS DEFINED -------------------    3

*** CURVED TOP SEGMENT ***
     RADIUS (IN) ---------------------------------------  405.88
     CENTRAL ANGLE (DEG) -------------------------------   24.59
     SEGMENT ARC LENGTH (IN) ---------------------------  174.19
     NUMBER OF BEAM ELEMENTS IN SEGMENT ----------------   13

*** CURVED CORNER SEGMENT ***
     RADIUS (IN) ---------------------------------------  133.94
     CENTRAL ANGLE (DEG) -------------------------------   16.14
     SEGMENT ARC LENGTH (IN) ---------------------------   37.73
     NUMBER OF BEAM ELEMENTS IN SEGMENT ----------------    3

*** STRAIGHT SIDE SEGMENT ***
     DEFLECTION ANGLE (DEG) ----------------------------   90.00
     SEGMENT LENGTH (IN) -------------------------------   50.94
     NUMBER OF BEAM ELEMENTS IN SEGMENT ----------------    3

 FINITE ELEMENT INPUT CONTROLS (PREP)


THE DATA TO BE RUN IS ENTITLED ...

New Level 2 arch mesh

PRINT AND PLOT CONTROL CODES ...
  PRINT CONTROL FOR MESH DATA------------    1
  PLOT FILE CONTROL MESH & RESULS--------    3
  PRINT FINITE ELEMENT RESULTS ----------    1
  INPUT DATA CHECK CODE------------------    0
                                  Page 3
```

28x10c1REC.out

```
KEY NUMBERS DESCRIBING MESH ...
  THE NUMBER OF LOAD STEPS IS------------   13
  TOTAL NUMBER OF NODES IS---------------  244
  TOTAL NUMBER OF ELEMENTS IS------------  209
  TOTAL NUMBER OF BEAM ELEMENTS IS-------   19
  MAX NUMBER OF BOUNDARY CONDITIONS IS---   36


 EXTENDED LEVEL-2: CHANGES TO CANNED MESH

          * NUMBER OF NODES TO BE CHANGED -------      0 *
          * NUMBER OF ELEMENTS TO BE CHANGED ----      0 *
          * ADDITIONAL BOUNDARY CONDITIONS ------     31 *


 * * * BOUNDARY CONDITIONS * * *
  (FORCES = LBS; DISPLACEMENTS = INCHES; ROTATIONS = DEGREES)

  BOUNDARY      LOAD      X-FORCE     OR      Y-FORCE     OR      X-Y ROTATION
BEAM ROTATIONAL
     NODE       STEP      X-DISPLACEMENT      Y-DISPLACEMENT
BOUNDARY CONDITIONS

      224         9    F =   0.0000E+00    F =  -0.8925E+02      0.0000E+00
     F
      224        10    F =   0.0000E+00    F =  -0.8925E+02      0.0000E+00
     F
      224        11    F =   0.0000E+00    F =  -0.8925E+02      0.0000E+00
     F
      224        12    F =   0.0000E+00    F =  -0.8925E+02      0.0000E+00
     F
      228         9    F =   0.0000E+00    F =   0.0000E+00      0.0000E+00
     F
      228        10    F =   0.0000E+00    F =   0.0000E+00      0.0000E+00
     F
      228        11    F =   0.0000E+00    F =   0.0000E+00      0.0000E+00
     F
      228        12    F =   0.0000E+00    F =   0.0000E+00      0.0000E+00
     F
      224         9    F =   0.0000E+00    F =  -0.4800E+01      0.0000E+00
     F
      225         9    F =   0.0000E+00    F =  -0.9600E+01      0.0000E+00
     F
      226         9    F =   0.0000E+00    F =  -0.9600E+01      0.0000E+00
     F
      227         9    F =   0.0000E+00    F =  -0.9600E+01      0.0000E+00
     F
      228         9    F =   0.0000E+00    F =  -0.9600E+01      0.0000E+00
     F
      229         9    F =   0.0000E+00    F =  -0.9600E+01      0.0000E+00
     F
      230         9    F =   0.0000E+00    F =  -0.9600E+01      0.0000E+00
```

28x10c1REC.out

```
F
 231          9    F =   0.0000E+00    F =  -0.9600E+01      0.0000E+00
F
 232          9    F =   0.0000E+00    F =  -0.9600E+01      0.0000E+00
F
 233          9    F =   0.0000E+00    F =  -0.9600E+01      0.0000E+00
F
 224         13    F =   0.0000E+00    F =  -0.2188E+01      0.0000E+00
F
 225         13    F =   0.0000E+00    F =  -0.4375E+01      0.0000E+00
F
 226         13    F =   0.0000E+00    F =  -0.4375E+01      0.0000E+00
F
 227         13    F =   0.0000E+00    F =  -0.4375E+01      0.0000E+00
F
 228         13    F =   0.0000E+00    F =  -0.4375E+01      0.0000E+00
F
 229         13    F =   0.0000E+00    F =  -0.4375E+01      0.0000E+00
F
 230         13    F =   0.0000E+00    F =  -0.4357E+01      0.0000E+00
F
 231         13    F =   0.0000E+00    F =  -0.4375E+01      0.0000E+00
F
 232         13    F =   0.0000E+00    F =  -0.4375E+01      0.0000E+00
F
 233         13    F =   0.0000E+00    F =  -0.4375E+01      0.0000E+00
F
 234         13    F =   0.0000E+00    F =  -0.4375E+01      0.0000E+00
F
 235         13    F =   0.0000E+00    F =  -0.4375E+01      0.0000E+00
F
 236         13    F =   0.0000E+00    F =  -0.4375E+01      0.0000E+00
F

* * * * * COMPLETED MESH GENERATION  * * * * *

New Level 2 arch mesh

CALCULATED KEY NUMBERS ...
  THE NUMBER OF DATA ERRORS IS-----------    0
  THE NUMBER OF SOIL MATERIALS IS--------    3
  THE NUMBER OF PIPE-TYPE GROUPS IS------    1
  THE NUMBER OF INTERFACE MATERIALS IS---   19
  BAND WIDTH ESTIMATE (MAX)--------------   88


* * * * MESH DATA HAS BEEN SAVED ON UNIT 14 * * * *


 BEAM-NODE SEQUENCE NUMBERS FOR EACH GROUP


    BEAM-ELEMENT GROUP NUMBER =    1

     BEAM-NODE       MESH-NODE      CONNECTED-GROUP-ELEMENTS
     SEQUENCE        NUMBER         FOREWARD-#     BACKWARD-#
         1             198              1              0
         2             194              2              1
         3             190              3              2
         4             167              4              3
```

5	164	5	4
6	161	6	5
7	158	7	6
8	138	8	7
9	136	9	8
10	134	10	9
11	132	11	10
12	130	12	11
13	128	13	12
14	118	14	13
15	115	15	14
16	109	16	15
17	103	17	16
18	97	18	17
19	91	19	18
20	80	0	19

```
MATERIAL DESCRIPTION FOR SOILS AND INTERFACE
(ALL DENSITY UNITS ARE pcf, ALL MODULUS UNITS ARE psi)

   PROPERTIES FOR MATERIAL  1   ********in site

        DENSITY =    0.14000E+03

        YOUNGS MODULUS= 0.5000E+04
        POISSONS RATIO= 0.3500E+00
        CONFINED MOD.= 0.8025E+04
        LATERAL COEFF.= 0.5385E+00

   PROPERTIES FOR MATERIAL  2   ********Footing

        DENSITY =    0.15000E+03

        YOUNGS MODULUS= 0.3122E+07
        POISSONS RATIO= 0.1700E+00
        CONFINED MOD.= 0.3356E+07
        LATERAL COEFF.= 0.2048E+00

   PROPERTIES FOR MATERIAL  3   ********SW95

        DENSITY =    0.14000E+03

   CONTROLS FOR DUNCAN SOIL MODEL
   WITH SELIG HYPERBOLIC BULK MODULUS FORMULATION

         LRFD STRESS CONTROL..........        0

         ENTERING ELEMENT RATIO.......       0.5000


   HYPERBOLIC STRESS-STRAIN PARAMETERS


         SOIL CLASSIFICATION ............SW95
```

COHESION INTERCEPT C 0.0000

FRICTION ANGLE PHIO (DEG)..... 48.0000

10-FOLD REDUCTION IN PHIO(DEG).. 8.0000

SCALED MODULUS NUMBER ZK 950.0000

MODULUS EXPONENT ZN 0.6000

FAILURE RATIO RF 0.7000

INIT. BULK MODULUS NUMBER BI.... 74.8000

ULT. VOLUMETRIC STRAIN EU 0.0200

INTERFACE ELEMENT MATERIAL-GROUP PROPERTIES

MAT. NO.	NORMAL-ANGLE	COEF-FRICTION	TENSILE-RUPTURE	INITIAL-GAP
1	90.00	0.40000	10.00000	0.00000
2	88.11	0.40000	10.00000	0.00000
3	86.22	0.40000	10.00000	0.00000
4	84.32	0.40000	10.00000	0.00000
5	82.43	0.40000	10.00000	0.00000
6	80.54	0.40000	10.00000	0.00000
7	78.65	0.40000	10.00000	0.00000
8	76.76	0.40000	10.00000	0.00000
9	74.87	0.40000	10.00000	0.00000
10	72.97	0.40000	10.00000	0.00000
11	71.08	0.40000	10.00000	0.00000
12	69.19	0.40000	10.00000	0.00000
13	67.30	0.40000	10.00000	0.00000
14	65.41	0.40000	10.00000	0.00000
15	10.46	0.40000	10.00000	0.00000
16	5.11	0.40000	10.00000	0.00000
17	0.00	0.40000	10.00000	0.00000
18	0.00	0.40000	10.00000	0.00000
19	0.00	0.40000	10.00000	0.00000

LRFD TOTAL LOAD FACTORS PER LOAD STEP

LOAD STEP	LOAD FACTOR	USER COMMENT
1	1.000	Factor for load step #1
2	1.000	Factor for load step #2
3	1.000	Factor for load step #3
4	1.000	Factor for load step #4
5	1.000	Factor for load step #5
6	1.000	Factor for load step #6
7	1.000	Factor for load step #7

28x10c1REC.out

8	1.000	Factor for load step #8
9	1.000	Factor for load step #9
10	1.000	Factor for load step #10
11	1.000	Factor for load step #11
12	1.000	Factor for load step #12
13	1.000	Factor for load step #13

+ +

SOLUTION OUTPUT RESULTS

+ +

FINITE ELEMENT OUTPUT FOR LOAD STEP 1

+ +

CONCRETE, FACTORED-EVALUATION FOR GROUP 1, LOAD-STEP 1

STRUCTURAL RESPONSES OF CONCRETE-GROUP 1, LOAD-STEP 1
COORDINATES, DISPLACEMENTS AND CRACK DEPTHS ARE INCHES
Y-BAR IS "NEUTRAL AXIS" LOCATION FROM INTERIOR, INCHES
PRESSURES ARE LB/IN**2
MOMENTS ARE IN-LB/IN
THRUST AND SHEAR ARE LB/IN

LOCAL NODE	X-COORD. Y-COORD.	X-DISP. Y-DISP.	N-PRES. S-PRES.	MOMENT THRUST	Y-BAR CRACK DEPTH
1	0.00	0.00000E+00	0.35899E-11	0.22073E+04	0.65476E+01
	125.00	-0.30877E+00	-0.14352E-11	-0.94941E+02	0.53540E+01
2	13.42	-0.27865E-04	0.78085E-11	0.21503E+04	0.65476E+01
	124.78	-0.30778E+00	0.12573E-12	-0.95605E+02	0.53202E+01
3	26.80	0.72337E-04	0.12027E-10	0.19797E+04	0.65476E+01
	124.11	-0.30486E+00	0.16867E-11	-0.96601E+02	0.52110E+01
4	40.15	0.41725E-03	-0.13317E-10	0.16964E+04	0.62699E+01
	123.01	-0.30020E+00	-0.22381E-11	-0.98258E+02	0.46813E+01
5	53.46	0.10862E-02	0.53614E-11	0.13014E+04	0.62699E+01
	121.47	-0.29410E+00	0.20045E-11	-0.10057E+03	0.41884E+01
6	66.71	0.20990E-02	-0.13794E-10	0.79647E+03	0.47714E+01
	119.48	-0.28714E+00	-0.14806E-11	-0.10354E+03	0.00000E+00

7	79.89	0.34127E-02	-0.67941E-11	0.18335E+03	0.48019E+01
	117.06	-0.27985E+00	-0.48250E-11	-0.10715E+03	0.00000E+00
8	92.98	0.49787E-02	0.23361E-10	-0.53604E+03	0.48019E+01
	114.21	-0.27254E+00	0.44148E-11	-0.11142E+03	0.00000E+00
9	105.97	0.67089E-02	-0.47673E-10	-0.13587E+04	0.34272E+01
	110.92	-0.26556E+00	-0.13060E-10	-0.11633E+03	0.49552E+01
10	118.85	0.83322E-02	0.91718E-11	-0.22834E+04	0.32135E+01
	107.21	-0.25975E+00	0.37226E-11	-0.12202E+03	0.63066E+01
11	131.59	0.95015E-02	-0.13544E-10	-0.33167E+04	0.34674E+01
	103.08	-0.25596E+00	-0.36373E-11	-0.12881E+03	0.76748E+01
12	144.19	0.10088E-01	0.60377E-11	-0.44786E+04	0.40809E+01
	98.53	-0.25417E+00	0.14400E-12	-0.13726E+03	0.95491E+01
13	156.64	0.10134E-01	0.58219E-10	-0.58047E+04	0.49117E+01
	93.56	-0.25392E+00	0.40049E-10	-0.14826E+03	0.12137E+02
14	168.91	0.98766E-02	-0.28419E-10	-0.73538E+04	0.13142E+02
	88.19	-0.25444E+00	0.19802E-10	-0.18238E+03	0.16740E+01
15	171.76	0.90790E-02	0.56041E-11	-0.67412E+04	0.47460E+01
	75.95	-0.25460E+00	-0.25581E-10	-0.21793E+03	0.11747E+02
16	173.47	0.72530E-02	0.32746E-12	-0.59221E+04	0.37441E+01
	63.50	-0.25477E+00	0.18336E-11	-0.22992E+03	0.87827E+01
17	174.00	0.31083E-02	-0.27579E-13	-0.48488E+04	0.33970E+01
	50.94	-0.25484E+00	0.10506E-10	-0.24020E+03	0.76542E+01
18	174.00	-0.68024E-02	0.21426E-12	-0.32325E+04	0.36437E+01
	33.96	-0.25470E+00	-0.12112E-10	-0.25505E+03	0.69277E+01
19	174.00	-0.19641E-01	0.58921E-12	-0.16162E+04	0.61687E+01
	16.98	-0.25461E+00	0.50281E-11	-0.27273E+03	0.00000E+00
20	174.00	-0.33291E-01	0.96416E-12	-0.43656E-10	0.61687E+01
	0.00	-0.25453E+00	0.22169E-10	-0.29042E+03	0.00000E+00

SHEAR FORCE DIAGNOSTCS FOR CONCRETE-GROUP 1, LOAD STEP 1
-- V-factor is coefficient of sqrt(PFPC) equal to capacity.
-- Shear depth "d" is negative if measured from outer wall.
-- Stirrup load is excess shear force above capacity.

NODE	EQUIVALENT V-factor	SHEAR CAPACITY lbs/inch	APPLIED SHEAR lbs/inch	APPLIED/ CAPACITY ratio	SHEAR DEPTH-d inches	STIRRUP LOAD lbs/inch
1	2.61	1683.37	0.01	0.000	8.00	0.00
2	2.61	1683.42	8.49	0.005	8.00	0.00
3	2.61	1683.51	16.94	0.010	8.00	0.00
4	2.61	1683.65	25.31	0.015	8.00	0.00
5	2.61	1683.84	33.58	0.020	8.00	0.00
6	3.40	2189.98	41.72	0.019	8.00	0.00
7	4.50	2923.16	49.72	0.017	8.06	0.00
8	3.73	2294.32	57.54	0.025	-7.63	0.00
9	2.82	1731.54	65.21	0.038	-7.63	0.00
10	2.31	1524.47	73.07	0.048	-8.19	0.00
11	2.05	1628.81	81.92	0.050	-9.88	0.00

28x10c1REC.out

12	1.78	1820.68	92.84	0.051	-12.69	0.00
13	1.57	2116.20	107.29	0.051	-16.69	0.00
14	1.39	2744.13	33.42	0.012	-24.56	0.00
15	1.61	2058.65	-56.97	0.028	-15.88	0.00
16	1.92	1718.02	-75.26	0.044	-11.13	0.00
17	2.10	1616.18	-90.28	0.056	-9.56	0.00
18	2.10	1617.17	-95.19	0.059	-9.56	0.00
19	3.48	2685.60	-95.19	0.035	-9.56	0.00
20	4.50	3466.79	-95.19	0.027	-9.56	0.00

STRESS AND STRAIN MEASURES FOR CONCRETE-GROUP 1, LOAD STEP 1

NODE	MAXIMUM COMPRESSION psi	AVERAGE SHEAR psi	RADIAL TENSION psi	INNER-WALL STRAIN in/in	OUTER-WALL STRAIN in/in
1	-197.50	0.00	0.73	0.6962E-04	-0.4173E-04
2	-192.91	1.09	0.71	0.6771E-04	-0.4076E-04
3	-179.01	2.18	0.65	0.6204E-04	-0.3783E-04
4	-155.39	3.25	0.49	0.4770E-04	-0.3284E-04
5	-122.60	4.32	0.37	0.3588E-04	-0.2591E-04
6	-51.23	5.36	0.05	0.6344E-05	-0.1082E-04
7	-18.66	6.34	0.00	-0.4102E-07	-0.3942E-05
8	-35.12	7.34	0.00	-0.7421E-05	0.3984E-05
9	-144.65	8.31	0.00	-0.3057E-04	0.4935E-04
10	-214.00	8.69	0.00	-0.4522E-04	0.9065E-04
11	-223.06	8.12	0.00	-0.4714E-04	0.1045E-03
12	-200.42	7.19	0.00	-0.4235E-04	0.9966E-04
13	-169.61	6.35	0.00	-0.3584E-04	0.8962E-04
14	-64.78	1.35	0.00	-0.1369E-04	0.1157E-04
15	-217.46	-3.54	0.00	-0.4595E-04	0.1101E-03
16	-331.36	-6.63	0.00	-0.7002E-04	0.1570E-03
17	-351.54	-9.23	0.00	-0.7429E-04	0.1585E-03
18	-260.09	-9.73	0.00	-0.5496E-04	0.9872E-04
19	-82.04	-9.73	0.00	-0.1734E-04	0.7989E-05
20	-21.76	-9.73	0.00	-0.4598E-05	-0.4598E-05

STEEL STRESS AND CRACK WIDTHS FOR CONCRETE-GROUP 1, LOAD STEP 1
NOTE: CRACK WIDTH IS REDUCED TO SERVICE-LOAD LEVEL.
ALL OTHER RESPONSES ARE AT FACTORED LOAD LEVEL.

NODE	INNER CAGE psi	OUTER CAGE psi	MAX STRESS TO YIELD ratio	CRACK WIDTH inches
1	1508.87	-465.02	0.0251	0.00000
2	1466.45	-456.45	0.0244	0.00000
3	1340.63	-429.72	0.0223	0.00000
4	1006.86	-420.83	0.0168	0.00000
5	749.58	-345.67	0.0125	0.00000
6	92.74	-211.61	0.0035	0.00000
7	-26.02	-95.51	0.0016	0.00000
8	-164.24	38.94	0.0027	0.00000
9	-467.89	955.89	0.0159	0.00000
10	-626.09	1895.39	0.0316	0.00000
11	-717.00	2374.69	0.0396	0.00000
12	-751.25	2446.54	0.0408	0.00000
13	-724.07	2346.41	0.0391	0.00000

14	-376.63	295.92	0.0063	0.00000
15	-921.34	2846.71	0.0474	0.00000
16	-1164.53	3703.67	0.0617	0.00000
17	-1131.23	3542.99	0.0590	0.00000
18	-935.23	2151.28	0.0359	0.00000
19	-417.98	90.65	0.0070	0.00000
20	-146.53	-146.53	0.0024	0.00000

ASSESSMENT SUMMARY CONCRETE-GROUP 1, LOAD-STEP 1

LRFD SUMMARY EVALUATION FOR GROUP 1, LOAD STEP 1

DESIGN-CRITERION	CONTROL NODE	FACTORED DEMAND	FACTORED CAPACITY	RATIO VALUE
STEEL YIELDING (psi)	16	3703.7	60000.0	0.062
CONCRETE CRUSHING (psi)	17	351.5	4875.0	0.072
SHEAR FAILURE (lbs/in)	18	95.2	1455.5	0.065
RADIAL-TENSION FAIL (psi)	1	0.7	69.6	0.011

LRFD SERVICE-LOAD PERFORMANCE MEASURES FOR GROUP 1, LOAD STEP 1

NODE NUMBER FOR MAXIMUM CRACK WIDTH 1

MAXIMUM CRACK WIDTH AT SERVICE LOAD (inches) 0.00000

LRFD RATIO: MAX-CRACK-WIDTH / ALLOWABLE 0.00

SPAN LENGTH FOR AUXILIARY EQUATIONS (inches)...... 348.00

+ +

FINITE ELEMENT OUTPUT FOR LOAD STEP 4

+ +

CONCRETE, FACTORED-EVALUATION FOR GROUP 1, LOAD-STEP 4

STRUCTURAL RESPONSES OF CONCRETE-GROUP 1, LOAD-STEP 4
COORDINATES, DISPLACEMENTS AND CRACK DEPTHS ARE INCHES
Y-BAR IS "NEUTRAL AXIS" LOCATION FROM INTERIOR, INCHES
PRESSURES ARE LB/IN**2
MOMENTS ARE IN-LB/IN
THRUST AND SHEAR ARE LB/IN

28x10c1REC.out

LOCAL NODE	X-COORD. Y-COORD.	X-DISP. Y-DISP.	N-PRES. S-PRES.	MOMENT THRUST	Y-BAR CRACK DEPTH
1	0.00	0.00000E+00	0.46625E-11	0.22273E+04	0.65476E+01
	125.00	-0.36990E+00	-0.15705E-11	-0.11037E+03	0.53171E+01
2	13.42	-0.34879E-04	0.85066E-11	0.21737E+04	0.65476E+01
	124.78	-0.36890E+00	0.12753E-12	-0.11102E+03	0.52847E+01
3	26.80	0.59754E-04	0.12351E-10	0.20134E+04	0.65476E+01
	124.11	-0.36595E+00	0.18256E-11	-0.11199E+03	0.51808E+01
4	40.15	0.40343E-03	-0.14766E-10	0.17471E+04	0.62699E+01
	123.01	-0.36122E+00	-0.25333E-11	-0.11361E+03	0.46747E+01
5	53.46	0.10790E-02	0.76358E-11	0.13759E+04	0.62699E+01
	121.47	-0.35502E+00	0.22293E-11	-0.11586E+03	0.42346E+01
6	66.71	0.21108E-02	-0.14842E-10	0.90161E+03	0.47714E+01
	119.48	-0.34790E+00	-0.19521E-11	-0.11875E+03	0.00000E+00
7	79.89	0.34582E-02	-0.20538E-11	0.32582E+03	0.48019E+01
	117.06	-0.34040E+00	-0.36205E-11	-0.12228E+03	0.00000E+00
8	92.98	0.50763E-02	0.23511E-10	-0.34956E+03	0.48019E+01
	114.21	-0.33284E+00	0.46925E-11	-0.12643E+03	0.00000E+00
9	105.97	0.68881E-02	-0.49697E-10	-0.11216E+04	0.34272E+01
	110.92	-0.32552E+00	-0.14185E-10	-0.13122E+03	0.45345E+01
10	118.85	0.86560E-02	0.96483E-11	-0.19890E+04	0.32135E+01
	107.21	-0.31918E+00	0.43726E-11	-0.13677E+03	0.60983E+01
11	131.59	0.10069E-01	-0.14561E-10	-0.29585E+04	0.34674E+01
	103.08	-0.31462E+00	-0.37040E-11	-0.14340E+03	0.74875E+01
12	144.19	0.11003E-01	0.11327E-10	-0.40503E+04	0.40809E+01
	98.53	-0.31185E+00	0.22212E-11	-0.15168E+03	0.93411E+01
13	156.64	0.11487E-01	0.55390E-10	-0.52997E+04	0.49117E+01
	93.56	-0.31049E+00	0.32130E-10	-0.16249E+03	0.11881E+02
14	168.91	0.11737E-01	-0.10308E+01	-0.67659E+04	0.13142E+02
	88.19	-0.30985E+00	-0.10871E+01	-0.20054E+03	0.45370E+00
15	171.76	0.12119E-01	-0.82558E+00	-0.60317E+04	0.47460E+01
	75.95	-0.30973E+00	-0.33177E+00	-0.24195E+03	0.11453E+02
16	173.47	0.11604E-01	-0.74302E+00	-0.51934E+04	0.37441E+01
	63.50	-0.30971E+00	-0.29629E+00	-0.25772E+03	0.85768E+01
17	174.00	0.90663E-02	-0.31484E+00	-0.41855E+04	0.33970E+01
	50.94	-0.30970E+00	-0.11869E+00	-0.27097E+03	0.74395E+01
18	174.00	0.19239E-02	-0.16753E+00	-0.27147E+04	0.36437E+01
	33.96	-0.30954E+00	-0.66429E-01	-0.28739E+03	0.65574E+01
19	174.00	-0.76925E-02	-0.45190E+00	-0.12922E+04	0.61687E+01
	16.98	-0.30944E+00	-0.18038E+00	-0.30717E+03	0.00000E+00
20	174.00	-0.17971E-01	-0.73628E+00	-0.60027E-10	0.61687E+01
	0.00	-0.30935E+00	-0.29434E+00	-0.32792E+03	0.00000E+00

28x10c1REC.out

SHEAR FORCE DIAGNOSTCS FOR CONCRETE-GROUP 1, LOAD STEP 4
-- V-factor is coefficient of sqrt(PFPC) equal to capacity.
-- Shear depth "d" is negative if measured from outer wall.
-- Stirrup load is excess shear force above capacity.

NODE	EQUIVALENT V-factor	SHEAR CAPACITY lbs/inch	APPLIED SHEAR lbs/inch	APPLIED/ CAPACITY ratio	SHEAR DEPTH-d inches	STIRRUP LOAD lbs/inch
1	2.61	1684.66	0.01	0.000	8.00	0.00
2	2.61	1684.71	7.98	0.005	8.00	0.00
3	2.61	1684.80	15.92	0.009	8.00	0.00
4	2.61	1684.93	23.79	0.014	8.00	0.00
5	2.61	1685.12	31.55	0.019	8.00	0.00
6	2.99	1927.71	39.19	0.020	8.00	0.00
7	4.50	2923.16	46.69	0.016	8.06	0.00
8	4.50	2764.55	54.01	0.020	-7.63	0.00
9	3.17	1951.37	61.18	0.031	-7.63	0.00
10	2.31	1525.53	68.55	0.045	-8.19	0.00
11	2.05	1629.77	76.92	0.047	-9.88	0.00
12	1.78	1821.54	87.36	0.048	-12.69	0.00
13	1.57	2116.99	101.34	0.048	-16.69	0.00
14	1.39	2745.05	25.49	0.009	-24.56	0.00
15	1.61	2059.99	-62.57	0.030	-15.88	0.00
16	1.92	1719.76	-73.42	0.043	-11.13	0.00
17	2.10	1618.23	-83.39	0.052	-9.56	0.00
18	2.15	1659.93	-85.20	0.051	-9.56	0.00
19	3.82	2945.78	-79.94	0.027	-9.56	0.00
20	4.50	3466.79	-72.27	0.021	-9.56	0.00

STRESS AND STRAIN MEASURES FOR CONCRETE-GROUP 1, LOAD STEP 4

NODE	MAXIMUM COMPRESSION psi	AVERAGE SHEAR psi	RADIAL TENSION psi	INNER-WALL STRAIN in/in	OUTER-WALL STRAIN in/in
1	-201.68	0.00	0.73	0.6974E-04	-0.4262E-04
2	-197.36	1.03	0.71	0.6795E-04	-0.4171E-04
3	-184.31	2.05	0.66	0.6262E-04	-0.3895E-04
4	-161.71	3.06	0.50	0.4878E-04	-0.3417E-04
5	-130.90	4.05	0.38	0.3766E-04	-0.2766E-04
6	-58.12	5.04	0.05	0.7154E-05	-0.1228E-04
7	-27.43	5.95	0.00	0.1137E-05	-0.5795E-05
8	-27.42	6.89	0.00	-0.5794E-05	0.1644E-05
9	-124.19	7.80	0.00	-0.2624E-04	0.3973E-04
10	-191.29	8.15	0.00	-0.4042E-04	0.7793E-04
11	-203.60	7.62	0.00	-0.4302E-04	0.9228E-04
12	-185.08	6.77	0.00	-0.3911E-04	0.8931E-04
13	-157.99	5.99	0.00	-0.3339E-04	0.8116E-04
14	-60.79	1.03	0.00	-0.1285E-04	0.1039E-04
15	-200.20	-3.89	0.00	-0.4230E-04	0.9732E-04
16	-299.07	-6.47	0.00	-0.6320E-04	0.1359E-03
17	-313.99	-8.53	0.00	-0.6635E-04	0.1346E-03
18	-229.69	-8.71	0.00	-0.4854E-04	0.8053E-04
19	-72.27	-8.17	0.00	-0.1527E-04	0.4976E-05
20	-24.57	-7.39	0.00	-0.5192E-05	-0.5192E-05

28x10c1REC.out

STEEL STRESS AND CRACK WIDTHS FOR CONCRETE-GROUP 1, LOAD STEP 4
NOTE: CRACK WIDTH IS REDUCED TO SERVICE-LOAD LEVEL.
ALL OTHER RESPONSES ARE AT FACTORED LOAD LEVEL.

NODE	INNER CAGE psi	OUTER CAGE psi	MAX STRESS TO YIELD ratio	CRACK WIDTH inches
1	1506.46	-485.33	0.0251	0.00000
2	1466.56	-477.30	0.0244	0.00000
3	1348.24	-452.21	0.0225	0.00000
4	1025.70	-444.65	0.0171	0.00000
5	783.88	-374.11	0.0131	0.00000
6	104.10	-240.42	0.0040	0.00000
7	-7.67	-131.18	0.0022	0.00000
8	-137.53	-5.03	0.0023	0.00000
9	-418.50	756.79	0.0126	0.00000
10	-578.24	1618.17	0.0270	0.00000
11	-670.75	2087.08	0.0348	0.00000
12	-705.21	2186.71	0.0364	0.00000
13	-682.19	2121.17	0.0354	0.00000
14	-354.51	264.27	0.0059	0.00000
15	-862.21	2509.23	0.0418	0.00000
16	-1078.34	3190.80	0.0532	0.00000
17	-1047.41	2987.41	0.0498	0.00000
18	-861.30	1730.80	0.0288	0.00000
19	-379.15	27.51	0.0063	0.00000
20	-165.46	-165.46	0.0028	0.00000

ASSESSMENT SUMMARY CONCRETE-GROUP 1, LOAD-STEP 4

LRFD SUMMARY EVALUATION FOR GROUP 1, LOAD STEP 4

DESIGN-CRITERION	CONTROL NODE	FACTORED DEMAND	FACTORED CAPACITY	RATIO VALUE
STEEL YIELDING (psi)	16	3190.8	60000.0	0.053
CONCRETE CRUSHING (psi)	17	314.0	4875.0	0.064
SHEAR FAILURE (lbs/in)	17	83.4	1456.4	0.057
RADIAL-TENSION FAIL (psi)	1	0.7	69.6	0.011

LRFD SERVICE-LOAD PERFORMANCE MEASURES FOR GROUP 1, LOAD STEP 4

NODE NUMBER FOR MAXIMUM CRACK WIDTH 1

MAXIMUM CRACK WIDTH AT SERVICE LOAD (inches) 0.00000

LRFD RATIO: MAX-CRACK-WIDTH / ALLOWABLE 0.00

SPAN LENGTH FOR AUXILIARY EQUATIONS (inches)..... 348.00

28x10c1REC.out

+ +

FINITE ELEMENT OUTPUT FOR LOAD STEP 8

+ +

CONCRETE, FACTORED-EVALUATION FOR GROUP 1, LOAD-STEP 8

STRUCTURAL RESPONSES OF CONCRETE-GROUP 1, LOAD-STEP 8
COORDINATES, DISPLACEMENTS AND CRACK DEPTHS ARE INCHES
Y-BAR IS "NEUTRAL AXIS" LOCATION FROM INTERIOR, INCHES
PRESSURES ARE LB/IN**2
MOMENTS ARE IN-LB/IN
THRUST AND SHEAR ARE LB/IN

LOCAL NODE	X-COORD. Y-COORD.	X-DISP. Y-DISP.	N-PRES. S-PRES.	MOMENT THRUST	Y-BAR CRACK DEPTH
1	0.00 125.00	0.00000E+00 -0.70727E+00	-0.19160E+01 0.78224E-02	0.83372E+04 -0.42767E+03	0.65476E+01 0.59574E+01
2	13.42 124.78	-0.13723E-03 -0.70350E+00	-0.19329E+01 -0.10099E+00	0.81787E+04 -0.43018E+03	0.65476E+01 0.59438E+01
3	26.80 124.11	0.21304E-03 -0.69238E+00	-0.19499E+01 -0.20981E+00	0.77074E+04 -0.43400E+03	0.65476E+01 0.59035E+01
4	40.15 123.01	0.15030E-02 -0.67440E+00	-0.19926E+01 -0.35078E+00	0.69226E+04 -0.44066E+03	0.65476E+01 0.58072E+01
5	53.46 121.47	0.40957E-02 -0.65035E+00	-0.20599E+01 -0.52937E+00	0.58198E+04 -0.45062E+03	0.65476E+01 0.56589E+01
6	66.71 119.48	0.82245E-02 -0.62155E+00	-0.21735E+01 -0.72966E+00	0.43923E+04 -0.46430E+03	0.65476E+01 0.52607E+01
7	79.89 117.06	0.13904E-01 -0.58980E+00	-0.23480E+01 -0.93176E+00	0.26258E+04 -0.48190E+03	0.61238E+01 0.37578E+01
8	92.98 114.21	0.20956E-01 -0.55685E+00	-0.25666E+01 -0.10266E+01	0.49693E+03 -0.50278E+03	0.48019E+01 0.00000E+00
9	105.97 110.92	0.29113E-01 -0.52397E+00	-0.29015E+01 -0.11606E+01	-0.20227E+04 -0.52657E+03	0.34272E+01 0.45084E+01
10	118.85 107.21	0.37753E-01 -0.49316E+00	-0.33911E+01 -0.11895E+01	-0.49837E+04 -0.55307E+03	0.30809E+01 0.64701E+01
11	131.59 103.08	0.45972E-01 -0.46696E+00	-0.39351E+01 -0.11512E+01	-0.84715E+04 -0.58165E+03	0.34674E+01 0.78931E+01
12	144.19 98.53	0.53262E-01 -0.44604E+00	-0.44617E+01 -0.11707E+01	-0.12594E+05 -0.61300E+03	0.40809E+01 0.99826E+01

28x10c1REC.out

13	156.64	0.59568E-01	-0.51105E+01	-0.17472E+05	0.49117E+01
	93.56	-0.42962E+00	-0.11226E+01	-0.64819E+03	0.12905E+02
14	168.91	0.65252E-01	-0.63419E+01	-0.23269E+05	0.64703E+01
	88.19	-0.41623E+00	-0.52694E+01	-0.76813E+03	0.18151E+02
15	171.76	0.76591E-01	-0.35340E+01	-0.20404E+05	0.47460E+01
	75.95	-0.41338E+00	-0.14137E+01	-0.87737E+03	0.12319E+02
16	173.47	0.84571E-01	-0.35160E+01	-0.17120E+05	0.37441E+01
	63.50	-0.41197E+00	-0.14063E+01	-0.88878E+03	0.90255E+01
17	174.00	0.85983E-01	-0.29882E+01	-0.13360E+05	0.33970E+01
	50.94	-0.41153E+00	-0.73957E+00	-0.89933E+03	0.78272E+01
18	174.00	0.76015E-01	-0.20620E+01	-0.83932E+04	0.34814E+01
	33.96	-0.41100E+00	-0.40309E-01	-0.91557E+03	0.72320E+01
19	174.00	0.57735E-01	-0.12225E+01	-0.40203E+04	0.43873E+01
	16.98	-0.41063E+00	-0.17234E+00	-0.93506E+03	0.41173E+01
20	174.00	0.36874E-01	-0.38300E+00	0.11596E-10	0.61687E+01
	0.00	-0.41035E+00	-0.30436E+00	-0.95567E+03	0.00000E+00

SHEAR FORCE DIAGNOSTCS FOR CONCRETE-GROUP 1, LOAD STEP 8
-- V-factor is coefficient of sqrt(PFPC) equal to capacity.
-- Shear depth "d" is negative if measured from outer wall.
-- Stirrup load is excess shear force above capacity.

NODE	EQUIVALENT V-factor	SHEAR CAPACITY lbs/inch	APPLIED SHEAR lbs/inch	APPLIED/ CAPACITY ratio	SHEAR DEPTH-d inches	STIRRUP LOAD lbs/inch
1	2.65	1711.24	0.12	0.000	8.00	0.00
2	2.65	1711.45	23.49	0.014	8.00	0.00
3	2.65	1711.77	46.87	0.027	8.00	0.00
4	2.65	1712.33	70.44	0.041	8.00	0.00
5	2.66	1713.16	94.42	0.055	8.00	0.00
6	2.66	1714.31	119.19	0.070	8.00	0.00
7	3.74	2429.11	145.36	0.060	8.06	0.00
8	4.50	2923.16	173.47	0.059	8.06	0.00
9	4.50	2764.55	204.52	0.074	-7.63	0.00
10	2.96	1951.82	240.65	0.123	-8.19	0.00
11	2.21	1760.82	284.00	0.161	-9.88	0.00
12	1.91	1956.67	335.86	0.172	-12.69	0.00
13	1.82	2443.31	398.34	0.163	-16.69	0.00
14	1.40	2773.79	102.27	0.037	-24.56	0.00
15	1.64	2095.49	-244.63	0.117	-15.88	0.00
16	1.96	1759.39	-280.12	0.159	-11.13	0.00
17	2.15	1660.13	-295.81	0.178	-9.56	0.00
18	2.29	1763.98	-275.04	0.156	-9.56	0.00
19	3.89	2997.08	-247.16	0.082	-9.56	0.00
20	4.50	3625.40	-226.40	0.062	10.00	0.00

STRESS AND STRAIN MEASURES FOR CONCRETE-GROUP 1, LOAD STEP 8

28x10c1REC.out

NODE	MAXIMUM COMPRESSION psi	AVERAGE SHEAR psi	RADIAL TENSION psi	INNER-WALL STRAIN in/in	OUTER-WALL STRAIN in/in
1	-757.28	0.01	2.74	0.2606E-03	-0.1600E-03
2	-744.63	3.02	2.68	0.2552E-03	-0.1574E-03
3	-706.41	6.02	2.52	0.2395E-03	-0.1493E-03
4	-640.64	9.05	2.21	0.2114E-03	-0.1354E-03
5	-551.20	12.13	1.82	0.1749E-03	-0.1165E-03
6	-415.16	15.32	1.20	0.1185E-03	-0.8773E-04
7	-239.02	18.53	0.42	0.4606E-04	-0.5051E-04
8	-68.40	22.11	0.00	-0.3882E-05	-0.1445E-04
9	-263.46	26.07	0.00	-0.5567E-04	0.6330E-04
10	-511.99	28.63	0.00	-0.1082E-03	0.1941E-03
11	-610.79	28.13	0.00	-0.1291E-03	0.2584E-03
12	-595.18	26.02	0.00	-0.1258E-03	0.2736E-03
13	-533.85	23.56	0.00	-0.1128E-03	0.2648E-03
14	-384.03	4.13	0.00	-0.8115E-04	0.1970E-03
15	-684.26	-15.20	0.00	-0.1446E-03	0.3277E-03
16	-991.83	-24.69	0.00	-0.2096E-03	0.4468E-03
17	-1007.96	-30.24	0.00	-0.2130E-03	0.4283E-03
18	-712.50	-28.12	0.00	-0.1506E-03	0.2535E-03
19	-299.64	-25.27	0.00	-0.6332E-04	0.4829E-04
20	-71.60	-23.15	0.00	-0.1513E-04	-0.1513E-04

STEEL STRESS AND CRACK WIDTHS FOR CONCRETE-GROUP 1, LOAD STEP 8
NOTE: CRACK WIDTH IS REDUCED TO SERVICE-LOAD LEVEL.
ALL OTHER RESPONSES ARE AT FACTORED LOAD LEVEL.

NODE	INNER CAGE psi	OUTER CAGE psi	MAX STRESS TO YIELD ratio	CRACK WIDTH inches
1	5622.75	-1832.69	0.0937	0.00000
2	5504.16	-1809.62	0.0917	0.00000
3	5155.32	-1736.93	0.0859	0.00000
4	4525.45	-1620.90	0.0754	0.00000
5	3715.85	-1448.77	0.0619	0.00000
6	2461.54	-1193.97	0.0410	0.00000
7	856.27	-864.17	0.0144	0.00000
8	-190.67	-379.03	0.0063	0.00000
9	-1020.63	1098.96	0.0183	0.00000
10	-1634.80	3974.38	0.0662	0.00000
11	-2107.76	5789.13	0.0965	0.00000
12	-2325.31	6667.11	0.1111	0.00000
13	-2336.59	6905.52	0.1151	0.00000
14	-1929.58	5477.11	0.0913	0.00000
15	-2964.13	8440.67	0.1407	0.00000
16	-3594.75	10478.94	0.1746	0.00000
17	-3381.74	9497.70	0.1583	0.00000
18	-2651.79	5464.04	0.0911	0.00000
19	-1425.01	816.57	0.0238	0.00000
20	-482.19	-482.19	0.0080	0.00000

ASSESSMENT SUMMARY CONCRETE-GROUP 1, LOAD-STEP 8

LRFD SUMMARY EVALUATION FOR GROUP 1, LOAD STEP 8

28x10c1REC.out

DESIGN-CRITERION	CONTROL NODE	FACTORED DEMAND	FACTORED CAPACITY	RATIO VALUE
STEEL YIELDING (psi)	16	10478.9	60000.0	0.175
CONCRETE CRUSHING (psi)	17	1008.0	4875.0	0.207
SHEAR FAILURE (lbs/in)	17	295.8	1494.1	0.198
RADIAL-TENSION FAIL (psi)	1	2.7	69.6	0.039

LRFD SERVICE-LOAD PERFORMANCE MEASURES FOR GROUP 1, LOAD STEP 8

NODE NUMBER FOR MAXIMUM CRACK WIDTH 1

MAXIMUM CRACK WIDTH AT SERVICE LOAD (inches) 0.00000

LRFD RATIO: MAX-CRACK-WIDTH / ALLOWABLE 0.00

SPAN LENGTH FOR AUXILIARY EQUATIONS (inches)...... 348.00

+ +

FINITE ELEMENT OUTPUT FOR LOAD STEP 12

+ +

CONCRETE, FACTORED-EVALUATION FOR GROUP 1, LOAD-STEP 12

STRUCTURAL RESPONSES OF CONCRETE-GROUP 1, LOAD-STEP 12
COORDINATES, DISPLACEMENTS AND CRACK DEPTHS ARE INCHES
Y-BAR IS "NEUTRAL AXIS" LOCATION FROM INTERIOR, INCHES
PRESSURES ARE LB/IN**2
MOMENTS ARE IN-LB/IN
THRUST AND SHEAR ARE LB/IN

LOCAL NODE	X-COORD. Y-COORD.	X-DISP. Y-DISP.	N-PRES. S-PRES.	MOMENT THRUST	Y-BAR CRACK DEPTH
1	0.00 125.00	0.00000E+00 -0.12812E+01	-0.24179E+02 -0.96690E+01	0.30738E+05 -0.69336E+03	0.66148E+01 0.63807E+01
2	13.42 124.78	-0.13465E-03 -0.12675E+01	-0.15123E+02 -0.60481E+01	0.28558E+05 -0.78331E+03	0.66148E+01 0.63384E+01
3	26.80 124.11	0.14015E-02 -0.12282E+01	-0.60663E+01 -0.24272E+01	0.23855E+05 -0.85128E+03	0.66148E+01 0.62612E+01
4	40.15 123.01	0.59948E-02 -0.11676E+01	-0.15462E+01 -0.61892E+00	0.18285E+05 -0.88587E+03	0.66148E+01 0.61333E+01

28x10c1REC.out

5	53.46	0.14497E-01	-0.87564E+00	0.12673E+05	0.65476E+01
	121.47	-0.10908E+01	-0.35026E+00	-0.90746E+03	0.58926E+01
6	66.71	0.27209E-01	-0.28341E+01	0.71513E+04	0.65476E+01
	119.48	-0.10032E+01	-0.11335E+01	-0.93295E+03	0.53090E+01
7	79.89	0.43877E-01	-0.23400E+01	0.13797E+04	0.55514E+01
	117.06	-0.91060E+00	-0.93604E+00	-0.96306E+03	0.98570E+00
8	92.98	0.63767E-01	-0.27906E+01	-0.45409E+04	0.25951E+01
	114.21	-0.81803E+00	-0.11162E+01	-0.99393E+03	0.58409E+01
9	105.97	0.85628E-01	-0.33207E+01	-0.10675E+05	0.29481E+01
	110.92	-0.73016E+00	-0.13283E+01	-0.10284E+04	0.63904E+01
10	118.85	0.10722E+00	-0.40136E+01	-0.17103E+05	0.30809E+01
	107.21	-0.65349E+00	-0.16055E+01	-0.10674E+04	0.70315E+01
11	131.59	0.12638E+00	-0.45951E+01	-0.23942E+05	0.34674E+01
	103.08	-0.59275E+00	-0.18380E+01	-0.11116E+04	0.83040E+01
12	144.19	0.14243E+00	-0.51567E+01	-0.31300E+05	0.40809E+01
	98.53	-0.54690E+00	-0.20627E+01	-0.11615E+04	0.10371E+02
13	156.64	0.15581E+00	-0.61824E+01	-0.39296E+05	0.49117E+01
	93.56	-0.51222E+00	-0.23431E+01	-0.12185E+04	0.13318E+02
14	168.91	0.16754E+00	-0.79044E+01	-0.48150E+05	0.57315E+01
	88.19	-0.48459E+00	-0.46547E+01	-0.13261E+04	0.19169E+02
15	171.76	0.19039E+00	-0.59846E+01	-0.41413E+05	0.47460E+01
	75.95	-0.47890E+00	-0.14443E+01	-0.13965E+04	0.12701E+02
16	173.47	0.20620E+00	-0.70439E+01	-0.34037E+05	0.37441E+01
	63.50	-0.47624E+00	-0.16370E+01	-0.13795E+04	0.92569E+01
17	174.00	0.20894E+00	-0.73551E+01	-0.26161E+05	0.33970E+01
	50.94	-0.47555E+00	-0.55050E-01	-0.13646E+04	0.80513E+01
18	174.00	0.18926E+00	-0.45848E+01	-0.16398E+05	0.34814E+01
	33.96	-0.47474E+00	0.14817E+01	-0.13563E+04	0.76163E+01
19	174.00	0.15210E+00	-0.16875E+01	-0.79554E+04	0.41094E+01
	16.98	-0.47414E+00	0.67502E+00	-0.13557E+04	0.59346E+01
20	174.00	0.10878E+00	0.12098E+01	-0.29559E-11	0.61687E+01
	0.00	-0.47373E+00	-0.13169E+00	-0.13619E+04	0.00000E+00

SHEAR FORCE DIAGNOSTCS FOR CONCRETE-GROUP 1, LOAD STEP 12
-- V-factor is coefficient of sqrt(PFPC) equal to capacity.
-- Shear depth "d" is negative if measured from outer wall.
-- Stirrup load is excess shear force above capacity.

NODE	EQUIVALENT V-factor	SHEAR CAPACITY lbs/inch	APPLIED SHEAR lbs/inch	APPLIED/ CAPACITY ratio	SHEAR DEPTH-d inches	STIRRUP LOAD lbs/inch
1	2.69	1733.50	68.08	0.039	8.00	0.00
2	2.70	1741.03	256.70	0.147	8.00	0.00

3	2.71	1746.73	383.39	0.219	8.00	0.00
4	2.71	1749.62	417.29	0.239	8.00	0.00
5	2.72	1751.43	415.46	0.237	8.00	0.00
6	3.82	2465.98	421.43	0.171	8.00	0.00
7	4.50	2923.16	436.31	0.149	8.06	0.00
8	3.78	2323.24	449.82	0.194	-7.63	0.00
9	2.79	1715.90	468.78	0.273	-7.63	0.00
10	2.41	1591.90	495.12	0.311	-8.19	0.00
11	2.13	1693.47	529.81	0.313	-9.88	0.00
12	1.84	1882.04	572.94	0.304	-12.69	0.00
13	1.62	2175.19	628.80	0.289	-16.69	0.00
14	1.41	2802.05	62.23	0.022	-24.56	0.00
15	1.66	2124.50	-561.59	0.264	-15.88	0.00
16	2.00	1790.21	-606.59	0.339	-11.13	0.00
17	2.19	1691.15	-600.73	0.355	-9.56	0.00
18	2.26	1744.63	-536.12	0.307	-9.56	0.00
19	3.71	2859.19	-482.87	0.169	-9.56	0.00
20	4.50	3466.79	-454.22	0.131	-9.56	0.00

STRESS AND STRAIN MEASURES FOR CONCRETE-GROUP 1, LOAD STEP 12

NODE	MAXIMUM COMPRESSION psi	AVERAGE SHEAR psi	RADIAL TENSION psi	INNER-WALL STRAIN in/in	OUTER-WALL STRAIN in/in
1	-2620.98	8.75	10.74	0.1004E-02	-0.5539E-03
2	-2460.59	32.99	9.89	0.9274E-03	-0.5200E-03
3	-2091.28	49.27	8.17	0.7668E-03	-0.4419E-03
4	-1641.87	53.63	6.08	0.5762E-03	-0.3470E-03
5	-1190.93	53.39	4.02	0.3854E-03	-0.2517E-03
6	-719.42	54.16	1.93	0.1934E-03	-0.1520E-03
7	-198.21	55.62	0.00	0.4548E-05	-0.4188E-04
8	-500.11	57.34	0.00	-0.1057E-03	0.1700E-03
9	-1174.12	59.76	0.00	-0.2481E-03	0.4591E-03
10	-1617.41	58.90	0.00	-0.3418E-03	0.6984E-03
11	-1639.73	52.49	0.00	-0.3465E-03	0.7484E-03
12	-1428.83	44.39	0.00	-0.3019E-03	0.6905E-03
13	-1173.04	37.19	0.00	-0.2479E-03	0.6015E-03
14	-781.71	2.51	0.00	-0.1652E-03	0.4388E-03
15	-1342.86	-34.89	0.00	-0.2838E-03	0.6749E-03
16	-1913.26	-53.47	0.00	-0.4043E-03	0.9006E-03
17	-1908.10	-61.42	0.00	-0.4032E-03	0.8525E-03
18	-1324.55	-54.81	0.00	-0.2799E-03	0.5137E-03
19	-620.82	-49.37	0.00	-0.1312E-03	0.1481E-03
20	-102.04	-46.44	0.00	-0.2156E-04	-0.2156E-04

STEEL STRESS AND CRACK WIDTHS FOR CONCRETE-GROUP 1, LOAD STEP 12
NOTE: CRACK WIDTH IS REDUCED TO SERVICE-LOAD LEVEL.
ALL OTHER RESPONSES ARE AT FACTORED LOAD LEVEL.

NODE	INNER CAGE psi	OUTER CAGE psi	MAX STRESS TO YIELD ratio	CRACK WIDTH inches
1	22067.37	-5548.86	0.3678	0.00656
2	20328.81	-5327.54	0.3388	0.00564
3	16732.60	-4694.01	0.2789	0.00374
4	12478.27	-3885.93	0.2080	0.00149

5	8221.29	-3071.52	0.1370	0.00000
6	3960.97	-2161.77	0.0660	0.00000
7	-149.15	-976.36	0.0163	0.00000
8	-1621.55	3290.31	0.0548	0.00000
9	-3427.47	9171.91	0.1529	0.00000
10	-4652.56	14650.92	0.2442	0.00033
11	-5374.63	16943.55	0.2824	0.00072
12	-5439.87	16909.01	0.2818	0.00000
13	-5069.01	15717.47	0.2620	0.00000
14	-3838.47	12246.20	0.2041	0.00000
15	-5706.58	17441.78	0.2907	0.00000
16	-6752.18	21227.49	0.3538	0.00246
17	-6179.96	19039.68	0.3173	0.00208
18	-4704.94	11232.69	0.1872	0.00000
19	-2697.11	2912.84	0.0485	0.00000
20	-687.15	-687.15	0.0115	0.00000

ASSESSMENT SUMMARY CONCRETE-GROUP 1, LOAD-STEP 12

LRFD SUMMARY EVALUATION FOR GROUP 1, LOAD STEP 12

DESIGN-CRITERION	CONTROL NODE	FACTORED DEMAND	FACTORED CAPACITY	RATIO VALUE
STEEL YIELDING (psi)	1	22067.4	60000.0	0.368
CONCRETE CRUSHING (psi)	1	2621.0	4875.0	0.538
SHEAR FAILURE (lbs/in)	17	600.7	1522.0	0.395
RADIAL-TENSION FAIL (psi)	1	10.7	69.6	0.154

LRFD SERVICE-LOAD PERFORMANCE MEASURES FOR GROUP 1, LOAD STEP 12

NODE NUMBER FOR MAXIMUM CRACK WIDTH 1

MAXIMUM CRACK WIDTH AT SERVICE LOAD (inches) 0.00656

LRFD RATIO: MAX-CRACK-WIDTH / ALLOWABLE 0.66

SPAN LENGTH FOR AUXILIARY EQUATIONS (inches)...... 348.00

+

FINITE ELEMENT OUTPUT FOR LOAD STEP 13

+

CONCRETE, FACTORED-EVALUATION FOR GROUP 1, LOAD-STEP 13

28x10c1REC.out

STRUCTURAL RESPONSES OF CONCRETE-GROUP 1, LOAD-STEP 13
COORDINATES, DISPLACEMENTS AND CRACK DEPTHS ARE INCHES
Y-BAR IS "NEUTRAL AXIS" LOCATION FROM INTERIOR, INCHES
PRESSURES ARE LB/IN**2
MOMENTS ARE IN-LB/IN
THRUST AND SHEAR ARE LB/IN

LOCAL NODE	X-COORD. Y-COORD.	X-DISP. Y-DISP.	N-PRES. S-PRES.	MOMENT THRUST	Y-BAR CRACK DEPTH
1	0.00	0.00000E+00	-0.24442E+02	0.31424E+05	0.66148E+01
	125.00	-0.13135E+01	-0.96650E+01	-0.71920E+03	0.63795E+01
2	13.42	-0.14315E-03	-0.15350E+02	0.29229E+05	0.66148E+01
	124.78	-0.12995E+01	-0.60845E+01	-0.80972E+03	0.63378E+01
3	26.80	0.14245E-02	-0.62581E+01	0.24482E+05	0.66148E+01
	124.11	-0.12593E+01	-0.25041E+01	-0.87855E+03	0.62617E+01
4	40.15	0.61257E-02	-0.17680E+01	0.18844E+05	0.66148E+01
	123.01	-0.11972E+01	-0.70596E+00	-0.91441E+03	0.61360E+01
5	53.46	0.14843E-01	-0.11019E+01	0.13138E+05	0.65476E+01
	121.47	-0.11184E+01	-0.44516E+00	-0.93745E+03	0.59001E+01
6	66.71	0.27897E-01	-0.30513E+01	0.74951E+04	0.65476E+01
	119.48	-0.10285E+01	-0.12210E+01	-0.96446E+03	0.53381E+01
7	79.89	0.45038E-01	-0.25618E+01	0.15770E+04	0.55100E+01
	117.06	-0.93321E+00	-0.10249E+01	-0.99611E+03	0.13919E+01
8	92.98	0.65520E-01	-0.30141E+01	-0.45152E+04	0.25951E+01
	114.21	-0.83786E+00	-0.12057E+01	-0.10286E+04	0.57801E+01
9	105.97	0.88060E-01	-0.35440E+01	-0.10845E+05	0.29481E+01
	110.92	-0.74724E+00	-0.14177E+01	-0.10647E+04	0.63819E+01
10	118.85	0.11036E+00	-0.42655E+01	-0.17494E+05	0.30809E+01
	107.21	-0.66804E+00	-0.17073E+01	-0.11055E+04	0.70285E+01
11	131.59	0.13020E+00	-0.48950E+01	-0.24582E+05	0.34674E+01
	103.08	-0.60515E+00	-0.19587E+01	-0.11519E+04	0.83029E+01
12	144.19	0.14687E+00	-0.54691E+01	-0.32225E+05	0.40809E+01
	98.53	-0.55754E+00	-0.21129E+01	-0.12036E+04	0.10372E+02
13	156.64	0.16080E+00	-0.64797E+01	-0.40543E+05	0.49117E+01
	93.56	-0.52145E+00	-0.23627E+01	-0.12619E+04	0.13323E+02
14	168.91	0.17303E+00	-0.81864E+01	-0.49754E+05	0.57315E+01
	88.19	-0.49263E+00	-0.48015E+01	-0.13736E+04	0.19186E+02
15	171.76	0.19688E+00	-0.61548E+01	-0.42805E+05	0.47460E+01
	75.95	-0.48670E+00	-0.15168E+01	-0.14471E+04	0.12706E+02
16	173.47	0.21345E+00	-0.72714E+01	-0.35183E+05	0.37441E+01
	63.50	-0.48391E+00	-0.17073E+01	-0.14292E+04	0.92592E+01
17	174.00	0.21652E+00	-0.76089E+01	-0.27040E+05	0.33970E+01
	50.94	-0.48318E+00	-0.75343E-01	-0.14135E+04	0.80534E+01

28x10c1REC.out

18	174.00	0.19649E+00	-0.47664E+01	-0.16944E+05	0.34814E+01
	33.96	-0.48235E+00	0.15299E+01	-0.14045E+04	0.76193E+01
19	174.00	0.15836E+00	-0.17389E+01	-0.82210E+04	0.41094E+01
	16.98	-0.48172E+00	0.69556E+00	-0.14033E+04	0.59582E+01
20	174.00	0.11382E+00	0.12885E+01	-0.84128E-11	0.61687E+01
	0.00	-0.48129E+00	-0.13877E+00	-0.14092E+04	0.00000E+00

SHEAR FORCE DIAGNOSTCS FOR CONCRETE-GROUP 1, LOAD STEP 13
-- V-factor is coefficient of sqrt(PFPC) equal to capacity.
-- Shear depth "d" is negative if measured from outer wall.
-- Stirrup load is excess shear force above capacity.

NODE	EQUIVALENT V-factor	SHEAR CAPACITY lbs/inch	APPLIED SHEAR lbs/inch	APPLIED/ CAPACITY ratio	SHEAR DEPTH-d inches	STIRRUP LOAD lbs/inch
1	2.69	1735.66	68.13	0.039	8.00	0.00
2	2.70	1743.25	258.93	0.149	8.00	0.00
3	2.71	1749.01	387.54	0.222	8.00	0.00
4	2.72	1752.01	423.30	0.242	8.00	0.00
5	2.72	1753.94	423.50	0.241	8.00	0.00
6	3.77	2428.91	431.43	0.178	8.00	0.00
7	4.50	2923.16	448.19	0.153	8.06	0.00
8	3.88	2385.13	463.56	0.194	-7.63	0.00
9	2.84	1743.02	484.34	0.278	-7.63	0.00
10	2.42	1594.63	512.63	0.321	-8.19	0.00
11	2.13	1696.12	549.72	0.324	-9.88	0.00
12	1.84	1884.57	595.60	0.316	-12.69	0.00
13	1.62	2177.58	654.13	0.300	-16.69	0.00
14	1.42	2804.46	67.07	0.024	-24.56	0.00
15	1.66	2127.33	-579.78	0.273	-15.88	0.00
16	2.00	1793.34	-626.97	0.350	-11.13	0.00
17	2.20	1694.41	-621.17	0.367	-9.56	0.00
18	2.27	1748.75	-554.18	0.317	-9.56	0.00
19	3.72	2865.16	-498.95	0.174	-9.56	0.00
20	4.50	3466.79	-469.42	0.135	-9.56	0.00

STRESS AND STRAIN MEASURES FOR CONCRETE-GROUP 1, LOAD STEP 13

NODE	MAXIMUM COMPRESSION psi	AVERAGE SHEAR psi	RADIAL TENSION psi	INNER-WALL STRAIN in/in	OUTER-WALL STRAIN in/in
1	-2681.48	8.76	10.97	0.1026E-02	-0.5666E-03
2	-2519.95	33.28	10.12	0.9488E-03	-0.5325E-03
3	-2147.18	49.80	8.39	0.7867E-03	-0.4537E-03
4	-1692.57	54.40	6.27	0.5938E-03	-0.3577E-03
5	-1234.20	54.43	4.17	0.3997E-03	-0.2608E-03
6	-752.93	55.44	2.04	0.2036E-03	-0.1591E-03
7	-215.10	57.14	0.00	0.7297E-05	-0.4546E-04
8	-502.66	59.10	0.00	-0.1062E-03	0.1669E-03
9	-1197.06	61.74	0.00	-0.2530E-03	0.4659E-03
10	-1657.00	60.98	0.00	-0.3502E-03	0.7138E-03
11	-1685.29	54.46	0.00	-0.3561E-03	0.7681E-03

28x10c1REC.out

12	-1472.14	46.15	0.00	-0.3111E-03	0.7107E-03
13	-1210.81	38.69	0.00	-0.2559E-03	0.6204E-03
14	-809.08	2.71	0.00	-0.1710E-03	0.4543E-03
15	-1388.41	-36.02	0.00	-0.2934E-03	0.6975E-03
16	-1978.19	-55.27	0.00	-0.4180E-03	0.9308E-03
17	-1972.70	-63.51	0.00	-0.4169E-03	0.8811E-03
18	-1369.48	-56.66	0.00	-0.2894E-03	0.5307E-03
19	-644.75	-51.01	0.00	-0.1362E-03	0.1542E-03
20	-105.58	-47.99	0.00	-0.2231E-04	-0.2231E-04

STEEL STRESS AND CRACK WIDTHS FOR CONCRETE-GROUP 1, LOAD STEP 13
NOTE: CRACK WIDTH IS REDUCED TO SERVICE-LOAD LEVEL.
ALL OTHER RESPONSES ARE AT FACTORED LOAD LEVEL.

NODE	INNER CAGE psi	OUTER CAGE psi	MAX STRESS TO YIELD ratio	CRACK WIDTH inches
1	22547.01	-5685.99	0.3758	0.00682
2	20796.33	-5463.03	0.3466	0.00589
3	17165.84	-4823.74	0.2861	0.00397
4	12860.08	-4006.99	0.2143	0.00169
5	8528.30	-3180.55	0.1421	0.00000
6	4177.54	-2252.68	0.0696	0.00000
7	-101.58	-1041.36	0.0174	0.00000
8	-1655.48	3209.32	0.0535	0.00000
9	-3508.30	9298.22	0.1550	0.00000
10	-4776.22	14969.35	0.2495	0.00051
11	-5529.87	17384.95	0.2897	0.00097
12	-5607.93	17401.32	0.2900	0.00000
13	-5233.57	16212.64	0.2702	0.00000
14	-3972.47	12679.07	0.2113	0.00000
15	-5901.25	18024.69	0.3004	0.00000
16	-6982.89	21939.11	0.3657	0.00286
17	-6390.96	19675.81	0.3279	0.00244
18	-4866.44	11604.74	0.1934	0.00000
19	-2799.11	3034.53	0.0506	0.00000
20	-711.00	-711.00	0.0119	0.00000

ASSESSMENT SUMMARY CONCRETE-GROUP 1, LOAD-STEP 13

LRFD SUMMARY EVALUATION FOR GROUP 1, LOAD STEP 13

DESIGN-CRITERION	CONTROL NODE	FACTORED DEMAND	FACTORED CAPACITY	RATIO VALUE
STEEL YIELDING (psi)	1	22547.0	60000.0	0.376
CONCRETE CRUSHING (psi)	1	2681.5	4875.0	0.550
SHEAR FAILURE (lbs/in)	17	621.2	1525.0	0.407
RADIAL-TENSION FAIL (psi)	1	11.0	69.6	0.158

LRFD SERVICE-LOAD PERFORMANCE MEASURES FOR GROUP 1, LOAD STEP 13

28x10c1REC.out

```
NODE NUMBER FOR MAXIMUM CRACK WIDTH ..............        1
MAXIMUM CRACK WIDTH AT SERVICE LOAD (inches) .....   0.00682
LRFD RATIO: MAX-CRACK-WIDTH / ALLOWABLE ..........      0.68
SPAN LENGTH FOR AUXILIARY EQUATIONS (inches)......    348.00


* * * * NORMAL EXIT FROM CANDE * * * *
```

28x10c2REC.out

```
*** WELCOME TO CANDE-2013(version 3/1/2013) ***

MASTER CONTROL AND PIPE-TYPE DATA FOR PROBLEM #  1

        USER TITLE: 28x8C2

        EXECUTION MODE ..................   ANALYS

        SOLUTION LEVEL ..................  #2 AUTO

        METHODOLOGY (LRFD OR SERVICE) ...     LRFD

        NUMBER OF PIPE-ELEMENT GROUPS ....       1

        MAXIMUM ITERATIONS PER STEP ......      30


        CULVERT PIPE-TYPE ............... CONCRETE

        CANNED MESH CODE # ..............        3

        NUMBER OF BEAM ELEMENTS .........       19

        CONCRETE MATERIAL PROPERTIES ARE AS FOLLOWS

             COMPRESSION STRENGTH (psi)..........       6500.000

             ELASTIC YOUNGS MODULUS (psi)........    4595487.000

             POISSON RATIO ......................          0.170

             CONCRETE DENSITY (pcf) .............        150.000

             INITIAL TENSILE CRACKING STRAIN.....       0.000010

             INITIAL COMPRESSION YIELD STRAIN....       0.000687

             INITIAL COMPRESSION CRUSH STRAIN ...       0.002000

             SHEAR STRENGTH MODEL (NSHEAR) # ...          1
             (VARIABLE STRENGTH MODEL PRINTED IN OUTPUT)

             CONCRETE CRACK-WIDTH MODEL NAME.....   HEGER-McGRATH
             (DRIVEN BY TENSILE STRAIN IN STEEL)

        STEEL REINFORCEMENT MATERIAL PROPERTIES

             TYPE OF STEEL CAGES (RSHAPE) .......     ARBIT

             STEEL YIELD STRENGTH (psi)..........      60000.000

             STEEL ELASTIC MODULUS (psi).........   29000000.000
```

28x10c2REC.out

STEEL POISSON RATIO 0.300000

STEEL YIELDING STRAIN 0.001883

NONLINEAR MODELING CODE (1,2,3) 3

STEEL-BASED CRACKWIDTH PREDICTION PARAMETERS

REBAR SPACING INNER ROW (SLI), (in)	4.00
REBAR SPACING OUTER ROW (SLO), (in)	4.00
NUMBER OF STEEL LAYERS FOR INNER CAGE	1
NUMBER OF STEEL LAYERS FOR OUTER CAGE	1
HEGER-MCGRATH CODE NUMBER FOR STEEL TYPE..	3

WALL THICKNESS, REBAR AREAS AND COVER DEPTHS

WALL-THICK	INNER-REBAR	OUTER-REBAR	INNER-COVER	OUTER COVER
10.0000	0.1980	0.0750	2.0000	2.4375
10.0000	0.1980	0.0750	2.0000	2.4375
10.0000	0.1980	0.0750	2.0000	2.4375
10.0000	0.1980	0.0750	2.0000	2.4375
10.0000	0.1980	0.0750	2.0000	2.4375
10.0000	0.1980	0.0750	2.0000	2.4375
10.0630	0.1980	0.0750	2.0000	2.4375
10.0630	0.1980	0.0750	2.0000	2.4375
10.0630	0.1100	0.1500	2.0000	2.4375
10.6250	0.1100	0.1500	2.0000	2.4375
12.3130	0.1100	0.1500	2.0000	2.4375
15.1250	0.1100	0.1500	2.0000	2.4375
19.1250	0.1100	0.1500	2.0000	2.4375
27.0000	0.1100	0.1500	2.0000	2.4375
18.3130	0.1100	0.1500	2.0000	2.4375
13.5630	0.1100	0.1500	2.0000	2.4375
12.0000	0.1100	0.1500	2.0000	2.4375
12.0000	0.0500	0.1500	2.0000	2.4375
12.0000	0.0500	0.1500	2.0000	2.4375
12.0000	0.0500	0.1500	2.0000	2.4375

LRFD RESISTANCE FACTORS FOR STRENGTH-LIMIT STATES
AND CRACK-WIDTH LIMIT AT SERVICE LOAD

YIELDING OF REINFORCEMENT STEEL	1.000
CRUSHING OF CONCRETE OUTER FIBER.....	0.750
SHEARING FAILURE OF CONCRETE	0.900
SPLITTING OF CONCRETE IN RADIAL TENSION	0.900
ALLOWABLE CRACKWIDTH SERVICE LOAD (inch)....	0.010

LARGE DEFORMATION/BUCKLING CODE, IBUCK = 0
IBUCK=0, MEANS SMALL DEFORMATION THEORY FOR GROUP
AND NO BUCKLING PREDICTION.

28x10c2REC.out

```
- - - - - - - - - - - - - - - - - - - - - - - - - - - - - - - - - - - - - - - - - - - -


 REVIEW SYSTEM INPUT DATA


 LEVEL-2 DATA FOR ARCH-TYPE CANNED MESH


    *** MESH PARAMETERS ***
     TYPE OF MESH ------------------------------------- TREN
     DEPTH OF TRENCH ABOVE FOOTING LEVEL (FT) ---------   12.42
     WIDTH OF TRENCH AT FOOTING LEVEL (FT) ------------    5.00
     SLOPE OF TRENCH WALL (H/V) -----------------------    0.00
     MESH SPACING PARAMETER ---------------------------    1.00
     TOTAL SOIL HEIGHT ABOVE CROWN (FT) ---------------    2.00
     MESH HEIGHT ABOVE CROWN (FT) ----------------------    2.00
     SOIL DENSITY ABOVE MESH (PCF) ---------------------  140.00
     NUMBER OF ELEMENT LAYERS ABOVE CROWN -------------    3


*** ARCH PARAMETERS ***
     CENTERLINE RISE OF ARCH (IN) ----------------------  125.00
     BOTTOM HALF SPAN OF ARCH (IN) ---------------------  174.00
     SIDE RISE OF ARCH ABOVE FOOTING (IN) -------------   50.94
     FOOTING DEPTH (IN) --------------------------------   24.00
     OUTSIDE FOOTING WIDTH (IN) ------------------------   30.00
     INSIDE FOOTING WIDTH (IN) -------------------------   30.00
     NUMBER OF ARCH SEGMENTS DEFINED -------------------    3

*** CURVED TOP SEGMENT ***
     RADIUS (IN) ---------------------------------------  405.88
     CENTRAL ANGLE (DEG) -------------------------------   24.59
     SEGMENT ARC LENGTH (IN) ---------------------------  174.19
     NUMBER OF BEAM ELEMENTS IN SEGMENT ----------------   13

*** CURVED CORNER SEGMENT ***
     RADIUS (IN) ---------------------------------------  133.94
     CENTRAL ANGLE (DEG) -------------------------------   16.14
     SEGMENT ARC LENGTH (IN) ---------------------------   37.73
     NUMBER OF BEAM ELEMENTS IN SEGMENT ----------------    3

*** STRAIGHT SIDE SEGMENT ***
     DEFLECTION ANGLE (DEG) ----------------------------   90.00
     SEGMENT LENGTH (IN) -------------------------------   50.94
     NUMBER OF BEAM ELEMENTS IN SEGMENT ----------------    3

 FINITE ELEMENT INPUT CONTROLS (PREP)


THE DATA TO BE RUN IS ENTITLED ...

New Level 2 arch mesh

PRINT AND PLOT CONTROL CODES ...
  PRINT CONTROL FOR MESH DATA------------    1
  PLOT FILE CONTROL MESH & RESULS--------    3
  PRINT FINITE ELEMENT RESULTS ----------    1
  INPUT DATA CHECK CODE------------------    0
```

28x10c2REC.out

```
KEY NUMBERS DESCRIBING MESH ...
  THE NUMBER OF LOAD STEPS IS------------   13
  TOTAL NUMBER OF NODES IS---------------  244
  TOTAL NUMBER OF ELEMENTS IS------------  209
  TOTAL NUMBER OF BEAM ELEMENTS IS-------   19
  MAX NUMBER OF BOUNDARY CONDITIONS IS---   36


 EXTENDED LEVEL-2: CHANGES TO CANNED MESH

          * NUMBER OF NODES TO BE CHANGED -------      0 *
          * NUMBER OF ELEMENTS TO BE CHANGED ----      0 *
          * ADDITIONAL BOUNDARY CONDITIONS ------     31 *


 * * * BOUNDARY CONDITIONS * * *
  (FORCES = LBS; DISPLACEMENTS = INCHES; ROTATIONS = DEGREES)

  BOUNDARY      LOAD      X-FORCE     OR      Y-FORCE     OR      X-Y ROTATION
BEAM ROTATIONAL
     NODE       STEP      X-DISPLACEMENT      Y-DISPLACEMENT
BOUNDARY CONDITIONS

      229         9    F =   0.0000E+00    F =  -0.8925E+02      0.0000E+00
     F
      229        10    F =   0.0000E+00    F =  -0.8925E+02      0.0000E+00
     F
      229        11    F =   0.0000E+00    F =  -0.8925E+02      0.0000E+00
     F
      229        12    F =   0.0000E+00    F =  -0.8925E+02      0.0000E+00
     F
      229         9    F =   0.0000E+00    F =  -0.8925E+02      0.0000E+00
     F
      229        10    F =   0.0000E+00    F =  -0.8925E+02      0.0000E+00
     F
      229        11    F =   0.0000E+00    F =  -0.8925E+02      0.0000E+00
     F
      229        12    F =   0.0000E+00    F =  -0.8925E+02      0.0000E+00
     F
      224         9    F =   0.0000E+00    F =  -0.4800E+01      0.0000E+00
     F
      225         9    F =   0.0000E+00    F =  -0.9600E+01      0.0000E+00
     F
      226         9    F =   0.0000E+00    F =  -0.9600E+01      0.0000E+00
     F
      227         9    F =   0.0000E+00    F =  -0.9600E+01      0.0000E+00
     F
      228         9    F =   0.0000E+00    F =  -0.9600E+01      0.0000E+00
     F
      229         9    F =   0.0000E+00    F =  -0.9600E+01      0.0000E+00
     F
      230         9    F =   0.0000E+00    F =  -0.9600E+01      0.0000E+00
```

28x10c2REC.out

```
F
 231          9    F =   0.0000E+00    F =  -0.9600E+01      0.0000E+00
F
 232          9    F =   0.0000E+00    F =  -0.9600E+01      0.0000E+00
F
 233          9    F =   0.0000E+00    F =  -0.9600E+01      0.0000E+00
F
 224         13    F =   0.0000E+00    F =  -0.2188E+01      0.0000E+00
F
 225         13    F =   0.0000E+00    F =  -0.4375E+01      0.0000E+00
F
 226         13    F =   0.0000E+00    F =  -0.4375E+01      0.0000E+00
F
 227         13    F =   0.0000E+00    F =  -0.4375E+01      0.0000E+00
F
 228         13    F =   0.0000E+00    F =  -0.4375E+01      0.0000E+00
F
 229         13    F =   0.0000E+00    F =  -0.4375E+01      0.0000E+00
F
 230         13    F =   0.0000E+00    F =  -0.4375E+01      0.0000E+00
F
 231         13    F =   0.0000E+00    F =  -0.4375E+01      0.0000E+00
F
 232         13    F =   0.0000E+00    F =  -0.4375E+01      0.0000E+00
F
 233         13    F =   0.0000E+00    F =  -0.4375E+01      0.0000E+00
F
 234         13    F =   0.0000E+00    F =  -0.4375E+01      0.0000E+00
F
 235         13    F =   0.0000E+00    F =  -0.4375E+01      0.0000E+00
F
 236         13    F =   0.0000E+00    F =  -0.4375E+01      0.0000E+00
F

* * * * * COMPLETED MESH GENERATION  * * * * *

New Level 2 arch mesh

CALCULATED KEY NUMBERS ...
  THE NUMBER OF DATA ERRORS IS-----------    0
  THE NUMBER OF SOIL MATERIALS IS--------    3
  THE NUMBER OF PIPE-TYPE GROUPS IS------    1
  THE NUMBER OF INTERFACE MATERIALS IS---   19
  BAND WIDTH ESTIMATE (MAX)--------------   88


* * * * MESH DATA HAS BEEN SAVED ON UNIT 14 * * * *


 BEAM-NODE SEQUENCE NUMBERS FOR EACH GROUP


    BEAM-ELEMENT GROUP NUMBER =    1

     BEAM-NODE       MESH-NODE      CONNECTED-GROUP-ELEMENTS
     SEQUENCE        NUMBER         FOREWARD-#     BACKWARD-#
         1             198              1              0
         2             194              2              1
         3             190              3              2
         4             167              4              3
```

5	164	5	4
6	161	6	5
7	158	7	6
8	138	8	7
9	136	9	8
10	134	10	9
11	132	11	10
12	130	12	11
13	128	13	12
14	118	14	13
15	115	15	14
16	109	16	15
17	103	17	16
18	97	18	17
19	91	19	18
20	80	0	19

```
MATERIAL DESCRIPTION FOR SOILS AND INTERFACE
(ALL DENSITY UNITS ARE pcf, ALL MODULUS UNITS ARE psi)

   PROPERTIES FOR MATERIAL  1   ********in site

        DENSITY =    0.14000E+03

        YOUNGS MODULUS= 0.5000E+04
        POISSONS RATIO= 0.3500E+00
        CONFINED MOD.= 0.8025E+04
        LATERAL COEFF.= 0.5385E+00

   PROPERTIES FOR MATERIAL  2   ********Footing

        DENSITY =    0.15000E+03

        YOUNGS MODULUS= 0.3122E+07
        POISSONS RATIO= 0.1700E+00
        CONFINED MOD.= 0.3356E+07
        LATERAL COEFF.= 0.2048E+00

   PROPERTIES FOR MATERIAL  3   ********SW95

        DENSITY =    0.14000E+03

   CONTROLS FOR DUNCAN SOIL MODEL
   WITH SELIG HYPERBOLIC BULK MODULUS FORMULATION

         LRFD STRESS CONTROL..........        0

         ENTERING ELEMENT RATIO.......      0.5000


   HYPERBOLIC STRESS-STRAIN PARAMETERS


         SOIL CLASSIFICATION ............SW95
```

COHESION INTERCEPT C	0.0000
FRICTION ANGLE PHIO (DEG).....	48.0000
10-FOLD REDUCTION IN PHIO(DEG)..	8.0000
SCALED MODULUS NUMBER ZK	950.0000
MODULUS EXPONENT ZN	0.6000
FAILURE RATIO RF	0.7000
INIT. BULK MODULUS NUMBER BI....	74.8000
ULT. VOLUMETRIC STRAIN EU	0.0200

INTERFACE ELEMENT MATERIAL-GROUP PROPERTIES

MAT. NO.	NORMAL-ANGLE	COEF-FRICTION	TENSILE-RUPTURE	INITIAL-GAP
1	90.00	0.40000	10.00000	0.00000
2	88.11	0.40000	10.00000	0.00000
3	86.22	0.40000	10.00000	0.00000
4	84.32	0.40000	10.00000	0.00000
5	82.43	0.40000	10.00000	0.00000
6	80.54	0.40000	10.00000	0.00000
7	78.65	0.40000	10.00000	0.00000
8	76.76	0.40000	10.00000	0.00000
9	74.87	0.40000	10.00000	0.00000
10	72.97	0.40000	10.00000	0.00000
11	71.08	0.40000	10.00000	0.00000
12	69.19	0.40000	10.00000	0.00000
13	67.30	0.40000	10.00000	0.00000
14	65.41	0.40000	10.00000	0.00000
15	10.46	0.40000	10.00000	0.00000
16	5.11	0.40000	10.00000	0.00000
17	0.00	0.40000	10.00000	0.00000
18	0.00	0.40000	10.00000	0.00000
19	0.00	0.40000	10.00000	0.00000

LRFD TOTAL LOAD FACTORS PER LOAD STEP

LOAD STEP	LOAD FACTOR	USER COMMENT
1	1.000	Factor for load step #1
2	1.000	Factor for load step #2
3	1.000	Factor for load step #3
4	1.000	Factor for load step #4
5	1.000	Factor for load step #5
6	1.000	Factor for load step #6
7	1.000	Factor for load step #7

28x10c2REC.out

8	1.000	Factor for load step #8
9	1.000	Factor for load step #9
10	1.000	Factor for load step #10
11	1.000	Factor for load step #11
12	1.000	Factor for load step #12
13	1.000	Factor for load step #13

+ +

SOLUTION OUTPUT RESULTS

+ +

FINITE ELEMENT OUTPUT FOR LOAD STEP 12

+ +

CONCRETE, FACTORED-EVALUATION FOR GROUP 1, LOAD-STEP 12

STRUCTURAL RESPONSES OF CONCRETE-GROUP 1, LOAD-STEP 12
COORDINATES, DISPLACEMENTS AND CRACK DEPTHS ARE INCHES
Y-BAR IS "NEUTRAL AXIS" LOCATION FROM INTERIOR, INCHES
PRESSURES ARE LB/IN**2
MOMENTS ARE IN-LB/IN
THRUST AND SHEAR ARE LB/IN

LOCAL NODE	X-COORD. Y-COORD.	X-DISP. Y-DISP.	N-PRES. S-PRES.	MOMENT THRUST	Y-BAR CRACK DEPTH
1	0.00 125.00	0.00000E+00 -0.12641E+01	-0.27626E+01 0.10153E-02	0.16276E+05 -0.10313E+04	0.66148E+01 0.60129E+01
2	13.42 124.78	-0.37408E-03 -0.12567E+01	-0.24770E+01 -0.10842E+00	0.16196E+05 -0.10335E+04	0.65476E+01 0.59868E+01
3	26.80 124.11	0.23697E-03 -0.12346E+01	-0.21914E+01 -0.21785E+00	0.15971E+05 -0.10367E+04	0.65476E+01 0.59775E+01
4	40.15 123.01	0.27690E-02 -0.11982E+01	-0.20460E+01 0.24056E+00	0.15657E+05 -0.10383E+04	0.65476E+01 0.59584E+01
5	53.46 121.47	0.81313E-02 -0.11479E+01	-0.52570E+01 0.21005E+01	0.15279E+05 -0.10253E+04	0.65476E+01 0.59515E+01
6	66.71 119.48	0.17174E-01 -0.10846E+01	-0.11786E+02 0.33117E+01	0.14257E+05 -0.99397E+03	0.65476E+01 0.59097E+01

7	79.89	0.30495E-01	-0.13938E+02	0.11404E+05	0.65930E+01
	117.06	-0.10100E+01	-0.53566E+00	-0.98474E+03	0.57565E+01
8	92.98	0.48116E-01	-0.15152E+02	0.63298E+04	0.63124E+01
	114.21	-0.92767E+00	-0.60611E+01	-0.10440E+04	0.46481E+01
9	105.97	0.69459E-01	-0.18110E+02	-0.11551E+04	0.38873E+01
	110.92	-0.84185E+00	-0.72416E+01	-0.11548E+04	0.23556E+01
10	118.85	0.92981E-01	-0.39860E+01	-0.11534E+05	0.30809E+01
	107.21	-0.75837E+00	-0.15941E+01	-0.12414E+04	0.66829E+01
11	131.59	0.11602E+00	-0.44744E+01	-0.22242E+05	0.34674E+01
	103.08	-0.68539E+00	-0.17906E+01	-0.12948E+04	0.81864E+01
12	144.19	0.13681E+00	-0.44781E+01	-0.33366E+05	0.40809E+01
	98.53	-0.62619E+00	-0.17921E+01	-0.13518E+04	0.10333E+02
13	156.64	0.15514E+00	-0.53337E+01	-0.44922E+05	0.49117E+01
	93.56	-0.57891E+00	-0.21340E+01	-0.14144E+04	0.13336E+02
14	168.91	0.17184E+00	-0.62762E+01	-0.57097E+05	0.57315E+01
	88.19	-0.53977E+00	-0.66277E+01	-0.15906E+04	0.19256E+02
15	171.76	0.20519E+00	-0.47455E+01	-0.49839E+05	0.47460E+01
	75.95	-0.53153E+00	-0.19018E+01	-0.17268E+04	0.12715E+02
16	173.47	0.23012E+00	-0.68172E+01	-0.41361E+05	0.37441E+01
	63.50	-0.52750E+00	-0.21422E+01	-0.17080E+04	0.92666E+01
17	174.00	0.23923E+00	-0.80304E+01	-0.31960E+05	0.33970E+01
	50.94	-0.52640E+00	-0.33102E+00	-0.16907E+04	0.80621E+01
18	174.00	0.22298E+00	-0.54703E+01	-0.20071E+05	0.34814E+01
	33.96	-0.52539E+00	0.14815E+01	-0.16818E+04	0.76331E+01
19	174.00	0.18496E+00	-0.19157E+01	-0.97592E+04	0.36437E+01
	16.98	-0.52461E+00	0.76620E+00	-0.16804E+04	0.62218E+01
20	174.00	0.13907E+00	0.16389E+01	0.13165E-09	0.61687E+01
	0.00	-0.52409E+00	0.50925E-01	-0.16851E+04	0.00000E+00

SHEAR FORCE DIAGNOSTCS FOR CONCRETE-GROUP 1, LOAD STEP 12
-- V-factor is coefficient of sqrt(PFPC) equal to capacity.
-- Shear depth "d" is negative if measured from outer wall.
-- Stirrup load is excess shear force above capacity.

NODE	EQUIVALENT V-factor	SHEAR CAPACITY lbs/inch	APPLIED SHEAR lbs/inch	APPLIED/ CAPACITY ratio	SHEAR DEPTH-d inches	STIRRUP LOAD lbs/inch
1	2.73	1761.80	0.59	0.000	8.00	0.00
2	2.73	1761.99	11.38	0.006	8.00	0.00
3	2.73	1762.26	20.12	0.011	8.00	0.00
4	2.73	1762.39	25.84	0.015	8.00	0.00
5	2.73	1761.30	52.24	0.030	8.00	0.00
6	2.73	1758.68	144.60	0.082	8.00	0.00
7	2.71	1760.05	295.81	0.168	8.06	0.00
8	4.50	2923.16	468.66	0.160	8.06	0.00
9	4.50	2764.55	666.63	0.241	-7.63	0.00

28x10c2REC.out

10	3.80	2511.34	786.90	0.313	-8.19	0.00
11	2.40	1911.86	814.70	0.426	-9.88	0.00
12	1.87	1915.50	846.32	0.442	-12.69	0.00
13	1.66	2228.80	885.56	0.397	-16.69	0.00
14	1.42	2815.45	165.43	0.059	-24.56	0.00
15	1.67	2142.96	-626.12	0.292	-15.88	0.00
16	2.02	1810.84	-711.09	0.393	-11.13	0.00
17	2.22	1712.89	-723.99	0.423	-9.56	0.00
18	2.29	1764.00	-653.75	0.371	-9.56	0.00
19	3.76	2896.70	-591.05	0.204	-9.56	0.00
20	4.50	3625.40	-558.52	0.154	10.00	0.00

STRESS AND STRAIN MEASURES FOR CONCRETE-GROUP 1, LOAD STEP 12

NODE	MAXIMUM COMPRESSION psi	AVERAGE SHEAR psi	RADIAL TENSION psi	INNER-WALL STRAIN in/in	OUTER-WALL STRAIN in/in
1	-1508.27	0.08	5.29	0.5057E-03	-0.3187E-03
2	-1504.35	1.46	5.21	0.4991E-03	-0.3179E-03
3	-1486.36	2.59	5.14	0.4916E-03	-0.3141E-03
4	-1458.52	3.32	5.00	0.4791E-03	-0.3082E-03
5	-1425.05	6.71	4.88	0.4674E-03	-0.3011E-03
6	-1315.05	18.58	4.43	0.4260E-03	-0.2779E-03
7	-1033.35	37.71	3.25	0.3152E-03	-0.2184E-03
8	-564.89	59.75	1.14	0.1210E-03	-0.1194E-03
9	-564.89	84.98	0.00	-0.5656E-04	0.1729E-04
10	-1183.56	93.61	0.00	-0.2501E-03	0.4509E-03
11	-1565.86	80.71	0.00	-0.3309E-03	0.6863E-03
12	-1538.93	65.57	0.00	-0.3252E-03	0.7328E-03
13	-1343.44	52.38	0.00	-0.2839E-03	0.6870E-03
14	-933.46	6.68	0.00	-0.1973E-03	0.5254E-03
15	-1621.60	-38.90	0.00	-0.3427E-03	0.8111E-03
16	-2329.74	-62.68	0.00	-0.4923E-03	0.1093E-02
17	-2334.93	-74.02	0.00	-0.4934E-03	0.1041E-02
18	-1627.08	-66.84	0.00	-0.3438E-03	0.6285E-03
19	-789.09	-60.43	0.00	-0.1667E-03	0.2003E-03
20	-126.26	-57.10	0.00	-0.2668E-04	-0.2668E-04

STEEL STRESS AND CRACK WIDTHS FOR CONCRETE-GROUP 1, LOAD STEP 12
NOTE: CRACK WIDTH IS REDUCED TO SERVICE-LOAD LEVEL.
ALL OTHER RESPONSES ARE AT FACTORED LOAD LEVEL.

NODE	INNER CAGE psi	OUTER CAGE psi	MAX STRESS TO YIELD ratio	CRACK WIDTH inches
1	10861.94	-3752.82	0.1810	0.00063
2	10699.09	-3784.09	0.1783	0.00055
3	10531.14	-3751.05	0.1755	0.00046
4	10250.69	-3706.13	0.1708	0.00031
5	9996.52	-3626.86	0.1666	0.00018
6	9088.29	-3388.53	0.1515	0.00000
7	6666.65	-2839.74	0.1111	0.00000
8	2334.87	-1948.25	0.0389	0.00000
9	-1334.77	-19.15	0.0222	0.00000
10	-3764.97	9245.52	0.1541	0.00000
11	-5279.69	15453.33	0.2576	0.00000

12	-5905.33	17918.32	0.2986	0.00000
13	-5811.32	17950.89	0.2992	0.00000
14	-4580.39	14663.08	0.2444	0.00000
15	-6904.82	20953.26	0.3492	0.00000
16	-8237.29	25763.18	0.4294	0.00502
17	-7576.08	23233.27	0.3872	0.00445
18	-5792.92	13734.39	0.2289	0.00000
19	-3364.32	4007.71	0.0668	0.00000
20	-850.23	-850.23	0.0142	0.00000

ASSESSMENT SUMMARY CONCRETE-GROUP 1, LOAD-STEP 12

LRFD SUMMARY EVALUATION FOR GROUP 1, LOAD STEP 12

DESIGN-CRITERION	CONTROL NODE	FACTORED DEMAND	FACTORED CAPACITY	RATIO VALUE
STEEL YIELDING (psi)	16	25763.2	60000.0	0.429
CONCRETE CRUSHING (psi)	17	2334.9	4875.0	0.479
SHEAR FAILURE (lbs/in)	12	846.3	1723.9	0.491
RADIAL-TENSION FAIL (psi)	1	5.3	69.6	0.076

LRFD SERVICE-LOAD PERFORMANCE MEASURES FOR GROUP 1, LOAD STEP 12

NODE NUMBER FOR MAXIMUM CRACK WIDTH 16

MAXIMUM CRACK WIDTH AT SERVICE LOAD (inches) 0.00502

LRFD RATIO: MAX-CRACK-WIDTH / ALLOWABLE 0.50

SPAN LENGTH FOR AUXILIARY EQUATIONS (inches)...... 348.00

+ +

FINITE ELEMENT OUTPUT FOR LOAD STEP 13

+ +

CONCRETE, FACTORED-EVALUATION FOR GROUP 1, LOAD-STEP 13

STRUCTURAL RESPONSES OF CONCRETE-GROUP 1, LOAD-STEP 13
COORDINATES, DISPLACEMENTS AND CRACK DEPTHS ARE INCHES
Y-BAR IS "NEUTRAL AXIS" LOCATION FROM INTERIOR, INCHES
PRESSURES ARE LB/IN**2
MOMENTS ARE IN-LB/IN
THRUST AND SHEAR ARE LB/IN

28x10c2REC.out

LOCAL NODE	X-COORD. Y-COORD.	X-DISP. Y-DISP.	N-PRES. S-PRES.	MOMENT THRUST	Y-BAR CRACK DEPTH
1	0.00	0.00000E+00	-0.29884E+01	0.16959E+05	0.66148E+01
	125.00	-0.12966E+01	-0.20985E-02	-0.10591E+04	0.60245E+01
2	13.42	-0.38277E-03	-0.26995E+01	0.16864E+05	0.65476E+01
	124.78	-0.12889E+01	-0.12989E+00	-0.10617E+04	0.59975E+01
3	26.80	0.26017E-03	-0.24106E+01	0.16598E+05	0.65476E+01
	124.11	-0.12659E+01	-0.25769E+00	-0.10655E+04	0.59871E+01
4	40.15	0.29004E-02	-0.22750E+01	0.16215E+05	0.65476E+01
	123.01	-0.12281E+01	0.18675E+00	-0.10678E+04	0.59662E+01
5	53.46	0.84766E-02	-0.54980E+01	0.15741E+05	0.65476E+01
	121.47	-0.11758E+01	0.20541E+01	-0.10557E+04	0.59557E+01
6	66.71	0.17859E-01	-0.12032E+02	0.14593E+05	0.65476E+01
	119.48	-0.11101E+01	0.32739E+01	-0.10253E+04	0.59097E+01
7	79.89	0.31652E-01	-0.14121E+02	0.11584E+05	0.65930E+01
	117.06	-0.10328E+01	-0.56286E+00	-0.10169E+04	0.57497E+01
8	92.98	0.49864E-01	-0.15378E+02	0.63345E+04	0.63124E+01
	114.21	-0.94773E+00	-0.61507E+01	-0.10774E+04	0.46101E+01
9	105.97	0.71895E-01	-0.18463E+02	-0.13513E+04	0.41331E+01
	110.92	-0.85914E+00	-0.73852E+01	-0.11902E+04	0.25979E+01
10	118.85	0.96145E-01	-0.40456E+01	-0.11979E+05	0.30809E+01
	107.21	-0.77308E+00	-0.16181E+01	-0.12785E+04	0.66943E+01
11	131.59	0.11988E+00	-0.47272E+01	-0.22930E+05	0.34674E+01
	103.08	-0.69790E+00	-0.18905E+01	-0.13334E+04	0.81907E+01
12	144.19	0.14130E+00	-0.47452E+01	-0.34325E+05	0.40809E+01
	98.53	-0.63691E+00	-0.18971E+01	-0.13924E+04	0.10336E+02
13	156.64	0.16019E+00	-0.56773E+01	-0.46182E+05	0.49117E+01
	93.56	-0.58820E+00	-0.22722E+01	-0.14574E+04	0.13340E+02
14	168.91	0.17739E+00	-0.66730E+01	-0.58701E+05	0.57315E+01
	88.19	-0.54787E+00	-0.68358E+01	-0.16387E+04	0.19267E+02
15	171.76	0.21175E+00	-0.49374E+01	-0.51232E+05	0.47460E+01
	75.95	-0.53938E+00	-0.19718E+01	-0.17783E+04	0.12718E+02
16	173.47	0.23746E+00	-0.70462E+01	-0.42513E+05	0.37441E+01
	63.50	-0.53522E+00	-0.21921E+01	-0.17584E+04	0.92682E+01
17	174.00	0.24690E+00	-0.82663E+01	-0.32847E+05	0.33970E+01
	50.94	-0.53409E+00	-0.34009E+00	-0.17401E+04	0.80636E+01
18	174.00	0.23030E+00	-0.56421E+01	-0.20625E+05	0.34814E+01
	33.96	-0.53305E+00	0.15356E+01	-0.17304E+04	0.76353E+01
19	174.00	0.19130E+00	-0.19648E+01	-0.10029E+05	0.36437E+01
	16.98	-0.53224E+00	0.78579E+00	-0.17284E+04	0.62446E+01
20	174.00	0.14415E+00	0.17126E+01	0.11983E-09	0.61687E+01

28x10c2REC.out

0.00	-0.53170E+00	0.36016E-01	-0.17328E+04	0.00000E+00

SHEAR FORCE DIAGNOSTCS FOR CONCRETE-GROUP 1, LOAD STEP 13
-- V-factor is coefficient of sqrt(PFPC) equal to capacity.
-- Shear depth "d" is negative if measured from outer wall.
-- Stirrup load is excess shear force above capacity.

NODE	EQUIVALENT V-factor	SHEAR CAPACITY lbs/inch	APPLIED SHEAR lbs/inch	APPLIED/ CAPACITY ratio	SHEAR DEPTH-d inches	STIRRUP LOAD lbs/inch
1	2.74	1764.14	0.62	0.000	8.00	0.00
2	2.74	1764.35	13.46	0.008	8.00	0.00
3	2.74	1764.67	24.22	0.014	8.00	0.00
4	2.74	1764.87	31.97	0.018	8.00	0.00
5	2.73	1763.85	60.54	0.034	8.00	0.00
6	2.73	1761.30	155.14	0.088	8.00	0.00
7	2.71	1762.73	308.18	0.175	8.06	0.00
8	4.50	2923.16	482.70	0.165	8.06	0.00
9	4.50	2764.55	683.40	0.247	-7.63	0.00
10	3.77	2490.93	805.25	0.323	-8.19	0.00
11	2.39	1904.71	833.89	0.438	-9.88	0.00
12	1.87	1913.17	867.68	0.454	-12.69	0.00
13	1.66	2229.96	909.64	0.408	-16.69	0.00
14	1.42	2817.89	169.86	0.060	-24.56	0.00
15	1.68	2145.83	-644.12	0.300	-15.88	0.00
16	2.02	1814.01	-731.20	0.403	-11.13	0.00
17	2.23	1716.19	-744.33	0.434	-9.56	0.00
18	2.29	1767.81	-671.94	0.380	-9.56	0.00
19	3.76	2902.41	-607.36	0.209	-9.56	0.00
20	4.50	3625.40	-574.00	0.158	10.00	0.00

STRESS AND STRAIN MEASURES FOR CONCRETE-GROUP 1, LOAD STEP 13

NODE	MAXIMUM COMPRESSION psi	AVERAGE SHEAR psi	RADIAL TENSION psi	INNER-WALL STRAIN in/in	OUTER-WALL STRAIN in/in
1	-1568.84	0.08	5.52	0.5275E-03	-0.3315E-03
2	-1564.06	1.73	5.43	0.5202E-03	-0.3305E-03
3	-1542.73	3.11	5.35	0.5113E-03	-0.3260E-03
4	-1509.40	4.11	5.18	0.4966E-03	-0.3190E-03
5	-1468.14	7.78	5.03	0.4816E-03	-0.3102E-03
6	-1347.90	19.94	4.53	0.4360E-03	-0.2848E-03
7	-1053.21	39.29	3.29	0.3200E-03	-0.2226E-03
8	-569.74	61.54	1.13	0.1202E-03	-0.1204E-03
9	-286.58	87.12	0.00	-0.6056E-04	0.2107E-04
10	-1227.44	95.79	0.00	-0.2594E-03	0.4688E-03
11	-1614.05	82.61	0.00	-0.3411E-03	0.7076E-03
12	-1583.42	67.23	0.00	-0.3346E-03	0.7538E-03
13	-1381.51	53.81	0.00	-0.2919E-03	0.7062E-03
14	-960.91	6.85	0.00	-0.2031E-03	0.5408E-03
15	-1667.31	-40.02	0.00	-0.3523E-03	0.8337E-03
16	-2395.06	-64.46	0.00	-0.5061E-03	0.1124E-02
17	-2400.18	-76.10	0.00	-0.5072E-03	0.1069E-02
18	-1672.61	-68.70	0.00	-0.3535E-03	0.6458E-03
19	-814.92	-62.09	0.00	-0.1722E-03	0.2077E-03

20	-129.83	-58.68	0.00	-0.2743E-04	-0.2743E-04

STEEL STRESS AND CRACK WIDTHS FOR CONCRETE-GROUP 1, LOAD STEP 13
NOTE: CRACK WIDTH IS REDUCED TO SERVICE-LOAD LEVEL.
ALL OTHER RESPONSES ARE AT FACTORED LOAD LEVEL.

NODE	INNER CAGE psi	OUTER CAGE psi	MAX STRESS TO YIELD ratio	CRACK WIDTH inches
1	11336.39	-3891.90	0.1889	0.00089
2	11156.52	-3924.31	0.1859	0.00079
3	10957.59	-3885.04	0.1826	0.00068
4	10626.40	-3829.88	0.1771	0.00051
5	10300.83	-3735.90	0.1717	0.00034
6	9299.47	-3477.96	0.1550	0.00000
7	6761.63	-2904.36	0.1127	0.00000
8	2307.79	-1979.23	0.0385	0.00000
9	-1412.85	41.46	0.0235	0.00000
10	-3897.94	9615.32	0.1603	0.00000
11	-5441.37	15932.90	0.2655	0.00015
12	-6076.73	18431.79	0.3072	0.00002
13	-5976.96	18452.02	0.3075	0.00000
14	-4714.96	15095.65	0.2516	0.00000
15	-7100.40	21536.36	0.3589	0.00000
16	-8469.64	26477.80	0.4413	0.00543
17	-7789.23	23875.62	0.3979	0.00481
18	-5956.41	14112.16	0.2352	0.00000
19	-3470.07	4159.65	0.0693	0.00000
20	-874.28	-874.28	0.0146	0.00000

ASSESSMENT SUMMARY CONCRETE-GROUP 1, LOAD-STEP 13

LRFD SUMMARY EVALUATION FOR GROUP 1, LOAD STEP 13

DESIGN-CRITERION	CONTROL NODE	FACTORED DEMAND	FACTORED CAPACITY	RATIO VALUE
STEEL YIELDING (psi)	16	26477.8	60000.0	0.441
CONCRETE CRUSHING (psi)	17	2400.2	4875.0	0.492
SHEAR FAILURE (lbs/in)	12	867.7	1721.9	0.504
RADIAL-TENSION FAIL (psi)	1	5.5	69.6	0.079

LRFD SERVICE-LOAD PERFORMANCE MEASURES FOR GROUP 1, LOAD STEP 13

NODE NUMBER FOR MAXIMUM CRACK WIDTH 16

MAXIMUM CRACK WIDTH AT SERVICE LOAD (inches) 0.00543

LRFD RATIO: MAX-CRACK-WIDTH / ALLOWABLE 0.54

28x10c2REC.out

```
SPAN LENGTH FOR AUXILIARY EQUATIONS (inches)......     348.00



* * * * NORMAL EXIT FROM CANDE * * * *
```

28x10c3REC.out

```
*** WELCOME TO CANDE-2013(version 3/1/2013) ***

MASTER CONTROL AND PIPE-TYPE DATA FOR PROBLEM #  1

        USER TITLE: 28x8C3

        EXECUTION MODE ..................   ANALYS

        SOLUTION LEVEL ..................  #2 AUTO

        METHODOLOGY (LRFD OR SERVICE) ...     LRFD

        NUMBER OF PIPE-ELEMENT GROUPS ....       1

        MAXIMUM ITERATIONS PER STEP ......      30


        CULVERT PIPE-TYPE ............... CONCRETE

        CANNED MESH CODE # ..............        3

        NUMBER OF BEAM ELEMENTS .........       19

        CONCRETE MATERIAL PROPERTIES ARE AS FOLLOWS

             COMPRESSION STRENGTH (psi)..........       6500.000

             ELASTIC YOUNGS MODULUS (psi)........    4595487.000

             POISSON RATIO ......................          0.170

             CONCRETE DENSITY (pcf) .............        150.000

             INITIAL TENSILE CRACKING STRAIN.....       0.000010

             INITIAL COMPRESSION YIELD STRAIN....       0.000687

             INITIAL COMPRESSION CRUSH STRAIN ...       0.002000

             SHEAR STRENGTH MODEL (NSHEAR) # ...          1
             (VARIABLE STRENGTH MODEL PRINTED IN OUTPUT)

             CONCRETE CRACK-WIDTH MODEL NAME.....   HEGER-McGRATH
             (DRIVEN BY TENSILE STRAIN IN STEEL)

        STEEL REINFORCEMENT MATERIAL PROPERTIES

             TYPE OF STEEL CAGES (RSHAPE) .......     ARBIT

             STEEL YIELD STRENGTH (psi)..........      60000.000

             STEEL ELASTIC MODULUS (psi).........   29000000.000
```

28x10c3REC.out

STEEL POISSON RATIO 0.300000

STEEL YIELDING STRAIN 0.001883

NONLINEAR MODELING CODE (1,2,3) 3

STEEL-BASED CRACKWIDTH PREDICTION PARAMETERS

REBAR SPACING INNER ROW (SLI), (in)	4.00
REBAR SPACING OUTER ROW (SLO), (in)	4.00
NUMBER OF STEEL LAYERS FOR INNER CAGE	1
NUMBER OF STEEL LAYERS FOR OUTER CAGE	1
HEGER-MCGRATH CODE NUMBER FOR STEEL TYPE..	3

WALL THICKNESS, REBAR AREAS AND COVER DEPTHS

WALL-THICK	INNER-REBAR	OUTER-REBAR	INNER-COVER	OUTER COVER
10.0000	0.1980	0.0750	2.0000	2.4375
10.0000	0.1980	0.0750	2.0000	2.4375
10.0000	0.1980	0.0750	2.0000	2.4375
10.0000	0.1980	0.0750	2.0000	2.4375
10.0000	0.1980	0.0750	2.0000	2.4375
10.0000	0.1980	0.0750	2.0000	2.4375
10.0630	0.1980	0.0750	2.0000	2.4375
10.0630	0.1980	0.0750	2.0000	2.4375
10.0630	0.1100	0.1500	2.0000	2.4375
10.6250	0.1100	0.1500	2.0000	2.4375
12.3130	0.1100	0.1500	2.0000	2.4375
15.1250	0.1100	0.1500	2.0000	2.4375
19.1250	0.1100	0.1500	2.0000	2.4375
27.0000	0.1100	0.1500	2.0000	2.4375
18.3130	0.1100	0.1500	2.0000	2.4375
13.5630	0.1100	0.1500	2.0000	2.4375
12.0000	0.1100	0.1500	2.0000	2.4375
12.0000	0.0500	0.1500	2.0000	2.4375
12.0000	0.0500	0.1500	2.0000	2.4375
12.0000	0.0500	0.1500	2.0000	2.4375

LRFD RESISTANCE FACTORS FOR STRENGTH-LIMIT STATES
AND CRACK-WIDTH LIMIT AT SERVICE LOAD

YIELDING OF REINFORCEMENT STEEL	1.000
CRUSHING OF CONCRETE OUTER FIBER.....	0.750
SHEARING FAILURE OF CONCRETE	0.900
SPLITTING OF CONCRETE IN RADIAL TENSION	0.900
ALLOWABLE CRACKWIDTH SERVICE LOAD (inch)....	0.010

LARGE DEFORMATION/BUCKLING CODE, IBUCK = 0
IBUCK=0, MEANS SMALL DEFORMATION THEORY FOR GROUP
AND NO BUCKLING PREDICTION.

28x10c3REC.out

```
- - - - - - - - - - - - - - - - - - - - - - - - - - - - - - - - - - - - - - - -


 REVIEW SYSTEM INPUT DATA


 LEVEL-2 DATA FOR ARCH-TYPE CANNED MESH


    *** MESH PARAMETERS ***
     TYPE OF MESH ------------------------------------- TREN
     DEPTH OF TRENCH ABOVE FOOTING LEVEL (FT) ---------   12.42
     WIDTH OF TRENCH AT FOOTING LEVEL (FT) ------------    5.00
     SLOPE OF TRENCH WALL (H/V) -----------------------    0.00
     MESH SPACING PARAMETER ---------------------------    1.00
     TOTAL SOIL HEIGHT ABOVE CROWN (FT) ---------------    2.00
     MESH HEIGHT ABOVE CROWN (FT) ----------------------    2.00
     SOIL DENSITY ABOVE MESH (PCF) --------------------  140.00
     NUMBER OF ELEMENT LAYERS ABOVE CROWN -------------    3


*** ARCH PARAMETERS ***
     CENTERLINE RISE OF ARCH (IN) ---------------------  125.00
     BOTTOM HALF SPAN OF ARCH (IN) --------------------  174.00
     SIDE RISE OF ARCH ABOVE FOOTING (IN) -------------   50.94
     FOOTING DEPTH (IN) -------------------------------   24.00
     OUTSIDE FOOTING WIDTH (IN) -----------------------   30.00
     INSIDE FOOTING WIDTH (IN) ------------------------   30.00
     NUMBER OF ARCH SEGMENTS DEFINED ------------------    3

*** CURVED TOP SEGMENT ***
     RADIUS (IN) --------------------------------------  405.88
     CENTRAL ANGLE (DEG) ------------------------------   24.59
     SEGMENT ARC LENGTH (IN) --------------------------  174.19
     NUMBER OF BEAM ELEMENTS IN SEGMENT ---------------   13

*** CURVED CORNER SEGMENT ***
     RADIUS (IN) --------------------------------------  133.94
     CENTRAL ANGLE (DEG) ------------------------------   16.14
     SEGMENT ARC LENGTH (IN) --------------------------   37.73
     NUMBER OF BEAM ELEMENTS IN SEGMENT ---------------    3

*** STRAIGHT SIDE SEGMENT ***
     DEFLECTION ANGLE (DEG) ---------------------------   90.00
     SEGMENT LENGTH (IN) ------------------------------   50.94
     NUMBER OF BEAM ELEMENTS IN SEGMENT ---------------    3

 FINITE ELEMENT INPUT CONTROLS (PREP)


THE DATA TO BE RUN IS ENTITLED ...

New Level 2 arch mesh

PRINT AND PLOT CONTROL CODES ...
  PRINT CONTROL FOR MESH DATA------------    1
  PLOT FILE CONTROL MESH & RESULS--------    3
  PRINT FINITE ELEMENT RESULTS ----------    1
  INPUT DATA CHECK CODE------------------    0
```

28x10c3REC.out

```
KEY NUMBERS DESCRIBING MESH ...
  THE NUMBER OF LOAD STEPS IS------------   13
  TOTAL NUMBER OF NODES IS---------------  244
  TOTAL NUMBER OF ELEMENTS IS------------  209
  TOTAL NUMBER OF BEAM ELEMENTS IS-------   19
  MAX NUMBER OF BOUNDARY CONDITIONS IS---   36



 EXTENDED LEVEL-2: CHANGES TO CANNED MESH


          * NUMBER OF NODES TO BE CHANGED -------      0 *
          * NUMBER OF ELEMENTS TO BE CHANGED ----      0 *
          * ADDITIONAL BOUNDARY CONDITIONS ------     31 *



* * * BOUNDARY CONDITIONS * * *
 (FORCES = LBS; DISPLACEMENTS = INCHES; ROTATIONS = DEGREES)

  BOUNDARY      LOAD      X-FORCE     OR      Y-FORCE     OR      X-Y ROTATION
BEAM ROTATIONAL
      NODE      STEP      X-DISPLACEMENT      Y-DISPLACEMENT
BOUNDARY CONDITIONS

       225         9    F =   0.0000E+00    F =  -0.6975E+02      0.0000E+00
      F
       225        10    F =   0.0000E+00    F =  -0.6975E+02      0.0000E+00
      F
       225        11    F =   0.0000E+00    F =  -0.6975E+02      0.0000E+00
      F
       225        12    F =   0.0000E+00    F =  -0.6975E+02      0.0000E+00
      F
       225         9    F =   0.0000E+00    F =  -0.6975E+02      0.0000E+00
      F
       225        10    F =   0.0000E+00    F =  -0.6975E+02      0.0000E+00
      F
       225        11    F =   0.0000E+00    F =  -0.6975E+02      0.0000E+00
      F
       225        12    F =   0.0000E+00    F =  -0.6975E+02      0.0000E+00
      F
       224         9    F =   0.0000E+00    F =  -0.4800E+01      0.0000E+00
      F
       225         9    F =   0.0000E+00    F =  -0.9600E+01      0.0000E+00
      F
       226         9    F =   0.0000E+00    F =  -0.9600E+01      0.0000E+00
      F
       227         9    F =   0.0000E+00    F =  -0.9600E+01      0.0000E+00
      F
       228         9    F =   0.0000E+00    F =  -0.9600E+01      0.0000E+00
      F
       229         9    F =   0.0000E+00    F =  -0.9600E+01      0.0000E+00
      F
       230         9    F =   0.0000E+00    F =  -0.9600E+01      0.0000E+00
```

28x10c3REC.out

```
F
 231          9    F =   0.0000E+00    F =  -0.9600E+01      0.0000E+00
F
 232          9    F =   0.0000E+00    F =  -0.9600E+01      0.0000E+00
F
 233          9    F =   0.0000E+00    F =  -0.9600E+01      0.0000E+00
F
 224         13    F =   0.0000E+00    F =  -0.2188E+01      0.0000E+00
F
 225         13    F =   0.0000E+00    F =  -0.4375E+01      0.0000E+00
F
 226         13    F =   0.0000E+00    F =  -0.4375E+01      0.0000E+00
F
 227         13    F =   0.0000E+00    F =  -0.4375E+01      0.0000E+00
F
 228         13    F =   0.0000E+00    F =  -0.4375E+01      0.0000E+00
F
 229         13    F =   0.0000E+00    F =  -0.4375E+01      0.0000E+00
F
 230         13    F =   0.0000E+00    F =  -0.4375E+01      0.0000E+00
F
 231         13    F =   0.0000E+00    F =  -0.4375E+01      0.0000E+00
F
 232         13    F =   0.0000E+00    F =  -0.4375E+01      0.0000E+00
F
 233         13    F =   0.0000E+00    F =  -0.4375E+01      0.0000E+00
F
 234         13    F =   0.0000E+00    F =  -0.4375E+01      0.0000E+00
F
 235         13    F =   0.0000E+00    F =  -0.4375E+01      0.0000E+00
F
 236         13    F =   0.0000E+00    F =  -0.4375E+01      0.0000E+00
F

* * * * * COMPLETED MESH GENERATION  * * * * *

New Level 2 arch mesh

CALCULATED KEY NUMBERS ...
  THE NUMBER OF DATA ERRORS IS-----------     0
  THE NUMBER OF SOIL MATERIALS IS--------     3
  THE NUMBER OF PIPE-TYPE GROUPS IS------     1
  THE NUMBER OF INTERFACE MATERIALS IS---    19
  BAND WIDTH ESTIMATE (MAX)--------------    88


* * * * MESH DATA HAS BEEN SAVED ON UNIT 14 * * * *


 BEAM-NODE SEQUENCE NUMBERS FOR EACH GROUP


    BEAM-ELEMENT GROUP NUMBER =     1

     BEAM-NODE       MESH-NODE      CONNECTED-GROUP-ELEMENTS
     SEQUENCE        NUMBER         FOREWARD-#     BACKWARD-#
         1             198              1              0
         2             194              2              1
         3             190              3              2
         4             167              4              3
```

5	164	5	4
6	161	6	5
7	158	7	6
8	138	8	7
9	136	9	8
10	134	10	9
11	132	11	10
12	130	12	11
13	128	13	12
14	118	14	13
15	115	15	14
16	109	16	15
17	103	17	16
18	97	18	17
19	91	19	18
20	80	0	19

```
MATERIAL DESCRIPTION FOR SOILS AND INTERFACE
(ALL DENSITY UNITS ARE pcf, ALL MODULUS UNITS ARE psi)

   PROPERTIES FOR MATERIAL  1   ********in site

        DENSITY =    0.14000E+03

        YOUNGS MODULUS= 0.5000E+04
        POISSONS RATIO= 0.3500E+00
        CONFINED MOD.= 0.8025E+04
        LATERAL COEFF.= 0.5385E+00

   PROPERTIES FOR MATERIAL  2   ********Footing

        DENSITY =    0.15000E+03

        YOUNGS MODULUS= 0.3122E+07
        POISSONS RATIO= 0.1700E+00
        CONFINED MOD.= 0.3356E+07
        LATERAL COEFF.= 0.2048E+00

   PROPERTIES FOR MATERIAL  3   ********SW95

        DENSITY =    0.14000E+03

   CONTROLS FOR DUNCAN SOIL MODEL
   WITH SELIG HYPERBOLIC BULK MODULUS FORMULATION

         LRFD STRESS CONTROL..........        0

         ENTERING ELEMENT RATIO.......      0.5000


   HYPERBOLIC STRESS-STRAIN PARAMETERS


         SOIL CLASSIFICATION ............SW95
```

COHESION INTERCEPT C	0.0000
FRICTION ANGLE PHIO (DEG).....	48.0000
10-FOLD REDUCTION IN PHIO(DEG)..	8.0000
SCALED MODULUS NUMBER ZK	950.0000
MODULUS EXPONENT ZN	0.6000
FAILURE RATIO RF	0.7000
INIT. BULK MODULUS NUMBER BI....	74.8000
ULT. VOLUMETRIC STRAIN EU	0.0200

INTERFACE ELEMENT MATERIAL-GROUP PROPERTIES

MAT. NO.	NORMAL-ANGLE	COEF-FRICTION	TENSILE-RUPTURE	INITIAL-GAP
1	90.00	0.40000	10.00000	0.00000
2	88.11	0.40000	10.00000	0.00000
3	86.22	0.40000	10.00000	0.00000
4	84.32	0.40000	10.00000	0.00000
5	82.43	0.40000	10.00000	0.00000
6	80.54	0.40000	10.00000	0.00000
7	78.65	0.40000	10.00000	0.00000
8	76.76	0.40000	10.00000	0.00000
9	74.87	0.40000	10.00000	0.00000
10	72.97	0.40000	10.00000	0.00000
11	71.08	0.40000	10.00000	0.00000
12	69.19	0.40000	10.00000	0.00000
13	67.30	0.40000	10.00000	0.00000
14	65.41	0.40000	10.00000	0.00000
15	10.46	0.40000	10.00000	0.00000
16	5.11	0.40000	10.00000	0.00000
17	0.00	0.40000	10.00000	0.00000
18	0.00	0.40000	10.00000	0.00000
19	0.00	0.40000	10.00000	0.00000

LRFD TOTAL LOAD FACTORS PER LOAD STEP

LOAD STEP	LOAD FACTOR	USER COMMENT
1	1.000	Factor for load step #1
2	1.000	Factor for load step #2
3	1.000	Factor for load step #3
4	1.000	Factor for load step #4
5	1.000	Factor for load step #5
6	1.000	Factor for load step #6
7	1.000	Factor for load step #7

28x10c3REC.out

8	1.000	Factor for load step #8
9	1.000	Factor for load step #9
10	1.000	Factor for load step #10
11	1.000	Factor for load step #11
12	1.000	Factor for load step #12
13	1.000	Factor for load step #13

+ +

SOLUTION OUTPUT RESULTS

+ +

FINITE ELEMENT OUTPUT FOR LOAD STEP 12

+ +

CONCRETE, FACTORED-EVALUATION FOR GROUP 1, LOAD-STEP 12

STRUCTURAL RESPONSES OF CONCRETE-GROUP 1, LOAD-STEP 12
COORDINATES, DISPLACEMENTS AND CRACK DEPTHS ARE INCHES
Y-BAR IS "NEUTRAL AXIS" LOCATION FROM INTERIOR, INCHES
PRESSURES ARE LB/IN**2
MOMENTS ARE IN-LB/IN
THRUST AND SHEAR ARE LB/IN

LOCAL NODE	X-COORD. Y-COORD.	X-DISP. Y-DISP.	N-PRES. S-PRES.	MOMENT THRUST	Y-BAR CRACK DEPTH
1	0.00 125.00	0.00000E+00 -0.15483E+01	-0.27479E+02 0.53397E+01	0.38163E+05 -0.97905E+03	0.66102E+01 0.63679E+01
2	13.42 124.78	-0.20416E-03 -0.15311E+01	-0.20307E+02 0.37319E-01	0.36782E+05 -0.98648E+03	0.66148E+01 0.63578E+01
3	26.80 124.11	0.17860E-02 -0.14810E+01	-0.13135E+02 -0.52651E+01	0.32033E+05 -0.10330E+04	0.66148E+01 0.63080E+01
4	40.15 123.01	0.77667E-02 -0.14023E+01	-0.79797E+01 -0.31948E+01	0.25229E+05 -0.11068E+04	0.66148E+01 0.61969E+01
5	53.46 121.47	0.18950E-01 -0.13013E+01	-0.33649E+01 -0.13434E+01	0.17325E+05 -0.11575E+04	0.65476E+01 0.59695E+01
6	66.71 119.48	0.35761E-01 -0.11855E+01	-0.23965E-01 -0.11020E-01	0.91758E+04 -0.11880E+04	0.65476E+01 0.53941E+01

28x10c3REC.out

7	79.89	0.57814E-01	-0.27196E+01	0.13938E+04	0.52975E+01
	117.06	-0.10631E+01	-0.10873E+01	-0.12169E+04	0.45175E+00
8	92.98	0.84031E-01	-0.25135E+01	-0.64933E+04	0.24151E+01
	114.21	-0.94103E+00	-0.10052E+01	-0.12528E+04	0.64742E+01
9	105.97	0.11242E+00	-0.34986E+01	-0.14429E+05	0.29481E+01
	110.92	-0.82678E+00	-0.13994E+01	-0.12915E+04	0.64766E+01
10	118.85	0.13999E+00	-0.42329E+01	-0.22575E+05	0.30809E+01
	107.21	-0.72889E+00	-0.16932E+01	-0.13358E+04	0.70766E+01
11	131.59	0.16422E+00	-0.48919E+01	-0.31052E+05	0.34674E+01
	103.08	-0.65206E+00	-0.19570E+01	-0.13854E+04	0.83465E+01
12	144.19	0.18438E+00	-0.55270E+01	-0.39981E+05	0.40809E+01
	98.53	-0.59451E+00	-0.22112E+01	-0.14410E+04	0.10419E+02
13	156.64	0.20108E+00	-0.65902E+01	-0.49490E+05	0.49117E+01
	93.56	-0.55123E+00	-0.18360E+01	-0.14994E+04	0.13380E+02
14	168.91	0.21565E+00	-0.86931E+01	-0.59806E+05	0.57315E+01
	88.19	-0.51689E+00	-0.36752E+01	-0.15898E+04	0.19347E+02
15	171.76	0.24390E+00	-0.73724E+01	-0.51267E+05	0.47460E+01
	75.95	-0.50987E+00	-0.14382E+01	-0.16377E+04	0.12774E+02
16	173.47	0.26338E+00	-0.87264E+01	-0.42024E+05	0.37441E+01
	63.50	-0.50662E+00	-0.15662E+01	-0.16065E+04	0.93026E+01
17	174.00	0.26671E+00	-0.89241E+01	-0.32281E+05	0.33970E+01
	50.94	-0.50581E+00	0.23819E+00	-0.15789E+04	0.80978E+01
18	174.00	0.24235E+00	-0.56967E+01	-0.20234E+05	0.34814E+01
	33.96	-0.50488E+00	0.21667E+01	-0.15597E+04	0.76957E+01
19	174.00	0.19594E+00	-0.19956E+01	-0.98291E+04	0.36437E+01
	16.98	-0.50415E+00	0.79835E+00	-0.15522E+04	0.64098E+01
20	174.00	0.14151E+00	0.17056E+01	-0.18122E-09	0.61687E+01
	0.00	-0.50367E+00	-0.56998E+00	-0.15563E+04	0.00000E+00

SHEAR FORCE DIAGNOSTCS FOR CONCRETE-GROUP 1, LOAD STEP 12
-- V-factor is coefficient of sqrt(PFPC) equal to capacity.
-- Shear depth "d" is negative if measured from outer wall.
-- Stirrup load is excess shear force above capacity.

NODE	EQUIVALENT V-factor	SHEAR CAPACITY lbs/inch	APPLIED SHEAR lbs/inch	APPLIED/ CAPACITY ratio	SHEAR DEPTH-d inches	STIRRUP LOAD lbs/inch
1	2.72	1757.43	-22.79	0.013	8.00	0.00
2	2.73	1758.05	228.67	0.130	8.00	0.00
3	2.73	1761.95	431.13	0.245	8.00	0.00
4	2.74	1768.13	548.86	0.310	8.00	0.00
5	2.75	1772.38	599.03	0.338	8.00	0.00
6	4.11	2649.67	594.51	0.224	8.00	0.00
7	4.50	2923.16	584.72	0.200	8.06	0.00
8	3.58	2203.72	590.45	0.268	-7.63	0.00

28x10c3REC.out

9	2.70	1658.09	600.12	0.362	-7.63	0.00
10	2.44	1611.05	620.34	0.385	-8.19	0.00
11	2.15	1711.49	649.54	0.380	-9.88	0.00
12	1.86	1898.79	688.01	0.362	-12.69	0.00
13	1.63	2190.67	739.82	0.338	-16.69	0.00
14	1.42	2815.41	45.03	0.016	-24.56	0.00
15	1.67	2137.98	-707.55	0.331	-15.88	0.00
16	2.01	1804.47	-755.09	0.418	-11.13	0.00
17	2.21	1705.44	-742.26	0.435	-9.56	0.00
18	2.27	1747.93	-661.15	0.378	-9.56	0.00
19	3.69	2847.63	-595.84	0.209	-9.56	0.00
20	4.50	3466.79	-561.96	0.162	-9.56	0.00

STRESS AND STRAIN MEASURES FOR CONCRETE-GROUP 1, LOAD STEP 12

NODE	MAXIMUM COMPRESSION psi	AVERAGE SHEAR psi	RADIAL TENSION psi	INNER-WALL STRAIN in/in	OUTER-WALL STRAIN in/in
1	-3265.15	-2.93	13.27	0.1242E-02	-0.6929E-03
2	-3166.14	29.39	12.76	0.1195E-02	-0.6691E-03
3	-2789.19	55.41	11.04	0.1034E-02	-0.5894E-03
4	-2248.55	70.54	8.47	0.8005E-03	-0.4752E-03
5	-1615.38	76.98	5.54	0.5304E-03	-0.3414E-03
6	-928.12	76.40	2.52	0.2514E-03	-0.1961E-03
7	-231.63	74.54	0.00	0.2301E-05	-0.4895E-04
8	-803.63	75.27	0.00	-0.1698E-03	0.3344E-03
9	-1576.52	76.50	0.00	-0.3331E-03	0.6297E-03
10	-2123.07	73.80	0.00	-0.4486E-03	0.9247E-03
11	-2117.55	64.35	0.00	-0.4475E-03	0.9726E-03
12	-1819.16	53.31	0.00	-0.3844E-03	0.8833E-03
13	-1473.26	43.76	0.00	-0.3113E-03	0.7583E-03
14	-970.14	1.82	0.00	-0.2050E-03	0.5535E-03
15	-1651.46	-43.96	0.00	-0.3490E-03	0.8378E-03
16	-2347.62	-66.56	0.00	-0.4961E-03	0.1115E-02
17	-2337.07	-75.89	0.00	-0.4939E-03	0.1056E-02
18	-1616.51	-67.59	0.00	-0.3416E-03	0.6386E-03
19	-781.49	-60.92	0.00	-0.1651E-03	0.2108E-03
20	-116.60	-57.45	0.00	-0.2464E-04	-0.2464E-04

STEEL STRESS AND CRACK WIDTHS FOR CONCRETE-GROUP 1, LOAD STEP 12
NOTE: CRACK WIDTH IS REDUCED TO SERVICE-LOAD LEVEL.
ALL OTHER RESPONSES ARE AT FACTORED LOAD LEVEL.

NODE	INNER CAGE psi	OUTER CAGE psi	MAX STRESS TO YIELD ratio	CRACK WIDTH inches
1	27257.14	-7048.52	0.4543	0.00931
2	26210.58	-6839.12	0.4368	0.00876
3	22607.15	-6172.02	0.3768	0.00685
4	17380.16	-5233.10	0.2897	0.00408
5	11346.29	-4106.79	0.1891	0.00089
6	5159.31	-2773.85	0.0860	0.00000
7	-251.28	-1164.28	0.0194	0.00000
8	-2218.27	6764.44	0.1127	0.00000
9	-4518.42	12634.39	0.2106	0.00000
10	-6059.18	19427.45	0.3238	0.00303

11	-6909.20	22036.80	0.3673	0.00360
12	-6908.58	21638.18	0.3606	0.00183
13	-6356.52	19822.08	0.3304	0.00000
14	-4742.63	15457.01	0.2576	0.00000
15	-6990.94	21664.97	0.3611	0.00006
16	-8238.21	26307.44	0.4385	0.00533
17	-7508.67	23610.12	0.3935	0.00466
18	-5679.66	14006.75	0.2334	0.00000
19	-3265.87	4284.74	0.0714	0.00000
20	-785.24	-785.24	0.0131	0.00000

ASSESSMENT SUMMARY CONCRETE-GROUP 1, LOAD-STEP 12

LRFD SUMMARY EVALUATION FOR GROUP 1, LOAD STEP 12

DESIGN-CRITERION	CONTROL NODE	FACTORED DEMAND	FACTORED CAPACITY	RATIO VALUE
STEEL YIELDING (psi)	1	27257.1	60000.0	0.454
CONCRETE CRUSHING (psi)	1	3265.1	4875.0	0.670
SHEAR FAILURE (lbs/in)	17	742.3	1534.9	0.484
RADIAL-TENSION FAIL (psi)	1	13.3	69.6	0.191

LRFD SERVICE-LOAD PERFORMANCE MEASURES FOR GROUP 1, LOAD STEP 12

NODE NUMBER FOR MAXIMUM CRACK WIDTH 1

MAXIMUM CRACK WIDTH AT SERVICE LOAD (inches) 0.00931

LRFD RATIO: MAX-CRACK-WIDTH / ALLOWABLE 0.93

SPAN LENGTH FOR AUXILIARY EQUATIONS (inches)...... 348.00

+

FINITE ELEMENT OUTPUT FOR LOAD STEP 13

+

CONCRETE, FACTORED-EVALUATION FOR GROUP 1, LOAD-STEP 13

STRUCTURAL RESPONSES OF CONCRETE-GROUP 1, LOAD-STEP 13
COORDINATES, DISPLACEMENTS AND CRACK DEPTHS ARE INCHES
Y-BAR IS "NEUTRAL AXIS" LOCATION FROM INTERIOR, INCHES
PRESSURES ARE LB/IN**2
MOMENTS ARE IN-LB/IN

28x10c3REC.out

THRUST AND SHEAR ARE LB/IN

LOCAL NODE	X-COORD. Y-COORD.	X-DISP. Y-DISP.	N-PRES. S-PRES.	MOMENT THRUST	Y-BAR CRACK DEPTH
1	0.00	0.00000E+00	-0.27755E+02	0.38868E+05	0.65127E+01
	125.00	-0.15811E+01	0.53850E+01	-0.10058E+04	0.63653E+01
2	13.42	-0.21292E-03	-0.20555E+02	0.37472E+05	0.66148E+01
	124.78	-0.15636E+01	0.44062E-01	-0.10132E+04	0.63571E+01
3	26.80	0.18107E-02	-0.13355E+02	0.32677E+05	0.66148E+01
	124.11	-0.15126E+01	-0.52969E+01	-0.10600E+04	0.63077E+01
4	40.15	0.79043E-02	-0.81664E+01	0.25798E+05	0.66148E+01
	123.01	-0.14323E+01	-0.32653E+01	-0.11347E+04	0.61978E+01
5	53.46	0.19311E-01	-0.35852E+01	0.17799E+05	0.65476E+01
	121.47	-0.13293E+01	-0.14336E+01	-0.11867E+04	0.59736E+01
6	66.71	0.36476E-01	-0.25103E+00	0.95277E+04	0.65476E+01
	119.48	-0.12110E+01	-0.10093E+00	-0.12187E+04	0.54152E+01
7	79.89	0.59014E-01	-0.29439E+01	0.15964E+04	0.49750E+01
	117.06	-0.10859E+01	-0.11782E+01	-0.12492E+04	0.73078E+00
8	92.98	0.85831E-01	-0.27353E+01	-0.64660E+04	0.24151E+01
	114.21	-0.96102E+00	-0.10944E+01	-0.12868E+04	0.64401E+01
9	105.97	0.11490E+00	-0.37133E+01	-0.14602E+05	0.29481E+01
	110.92	-0.84399E+00	-0.14853E+01	-0.13271E+04	0.64697E+01
10	118.85	0.14319E+00	-0.44757E+01	-0.22970E+05	0.30809E+01
	107.21	-0.74355E+00	-0.17901E+01	-0.13731E+04	0.70738E+01
11	131.59	0.16811E+00	-0.51785E+01	-0.31698E+05	0.34674E+01
	103.08	-0.66455E+00	-0.20712E+01	-0.14248E+04	0.83452E+01
12	144.19	0.18888E+00	-0.58344E+01	-0.40911E+05	0.40809E+01
	98.53	-0.60523E+00	-0.23034E+01	-0.14825E+04	0.10419E+02
13	156.64	0.20614E+00	-0.68908E+01	-0.50740E+05	0.49117E+01
	93.56	-0.56052E+00	-0.18682E+01	-0.15425E+04	0.13382E+02
14	168.91	0.22122E+00	-0.89888E+01	-0.61412E+05	0.57315E+01
	88.19	-0.52499E+00	-0.38084E+01	-0.16370E+04	0.19356E+02
15	171.76	0.25048E+00	-0.75394E+01	-0.52665E+05	0.47460E+01
	75.95	-0.51771E+00	-0.15105E+01	-0.16881E+04	0.12776E+02
16	173.47	0.27074E+00	-0.89508E+01	-0.43183E+05	0.37441E+01
	63.50	-0.51433E+00	-0.16227E+01	-0.16559E+04	0.93035E+01
17	174.00	0.27440E+00	-0.91378E+01	-0.33176E+05	0.33970E+01
	50.94	-0.51349E+00	0.22493E+00	-0.16274E+04	0.80986E+01
18	174.00	0.24968E+00	-0.58654E+01	-0.20793E+05	0.34814E+01
	33.96	-0.51253E+00	0.21968E+01	-0.16076E+04	0.76968E+01
19	174.00	0.20227E+00	-0.20569E+01	-0.10099E+05	0.36437E+01
	16.98	-0.51178E+00	0.82271E+00	-0.15996E+04	0.64265E+01

28x10c3REC.out

20	174.00	0.14657E+00	0.17517E+01	-0.14484E-09	0.61687E+01
	0.00	-0.51127E+00	-0.55141E+00	-0.16033E+04	0.00000E+00

SHEAR FORCE DIAGNOSTCS FOR CONCRETE-GROUP 1, LOAD STEP 13
-- V-factor is coefficient of sqrt(PFPC) equal to capacity.
-- Shear depth "d" is negative if measured from outer wall.
-- Stirrup load is excess shear force above capacity.

NODE	EQUIVALENT V-factor	SHEAR CAPACITY lbs/inch	APPLIED SHEAR lbs/inch	APPLIED/ CAPACITY ratio	SHEAR DEPTH-d inches	STIRRUP LOAD lbs/inch
1	2.73	1759.67	-22.96	0.013	8.00	0.00
2	2.73	1760.29	230.94	0.131	8.00	0.00
3	2.74	1764.21	435.65	0.247	8.00	0.00
4	2.74	1770.47	555.19	0.314	8.00	0.00
5	2.75	1774.83	607.15	0.342	8.00	0.00
6	4.06	2616.15	604.64	0.231	8.00	0.00
7	4.50	2923.16	596.83	0.204	8.06	0.00
8	3.66	2250.49	604.46	0.269	-7.63	0.00
9	2.73	1680.45	615.91	0.367	-7.63	0.00
10	2.44	1613.72	637.99	0.395	-8.19	0.00
11	2.15	1714.08	669.46	0.391	-9.88	0.00
12	1.86	1901.28	710.58	0.374	-12.69	0.00
13	1.63	2193.04	765.07	0.349	-16.69	0.00
14	1.42	2817.80	50.03	0.018	-24.56	0.00
15	1.67	2140.80	-725.38	0.339	-15.88	0.00
16	2.02	1807.57	-775.11	0.429	-11.13	0.00
17	2.22	1708.68	-762.64	0.446	-9.56	0.00
18	2.27	1751.90	-679.54	0.388	-9.56	0.00
19	3.70	2854.25	-612.28	0.215	-9.56	0.00
20	4.50	3466.79	-577.36	0.167	-9.56	0.00

STRESS AND STRAIN MEASURES FOR CONCRETE-GROUP 1, LOAD STEP 13

NODE	MAXIMUM COMPRESSION psi	AVERAGE SHEAR psi	RADIAL TENSION psi	INNER-WALL STRAIN in/in	OUTER-WALL STRAIN in/in
1	-3300.10	-2.95	13.51	0.1266E-02	-0.7070E-03
2	-3227.16	29.68	12.99	0.1217E-02	-0.6820E-03
3	-2846.46	55.99	11.26	0.1055E-02	-0.6015E-03
4	-2299.95	71.35	8.66	0.8185E-03	-0.4860E-03
5	-1659.23	78.03	5.70	0.5450E-03	-0.3506E-03
6	-962.15	77.70	2.62	0.2620E-03	-0.2033E-03
7	-245.98	76.09	0.00	0.4070E-05	-0.5198E-04
8	-806.55	77.06	0.00	-0.1704E-03	0.3307E-03
9	-1599.51	78.52	0.00	-0.3380E-03	0.6366E-03
10	-2162.88	75.89	0.00	-0.4571E-03	0.9404E-03
11	-2163.30	66.32	0.00	-0.4571E-03	0.9925E-03
12	-1862.57	55.06	0.00	-0.3936E-03	0.9036E-03
13	-1511.09	45.25	0.00	-0.3193E-03	0.7774E-03
14	-997.51	2.02	0.00	-0.2108E-03	0.5690E-03
15	-1697.20	-45.07	0.00	-0.3586E-03	0.8605E-03
16	-2413.10	-68.33	0.00	-0.5099E-03	0.1146E-02
17	-2402.66	-77.97	0.00	-0.5077E-03	0.1085E-02
18	-1662.22	-69.47	0.00	-0.3513E-03	0.6561E-03

28x10c3REC.out

19	-807.26	-62.60	0.00	-0.1706E-03	0.2182E-03
20	-120.13	-59.03	0.00	-0.2539E-04	-0.2539E-04

STEEL STRESS AND CRACK WIDTHS FOR CONCRETE-GROUP 1, LOAD STEP 13
NOTE: CRACK WIDTH IS REDUCED TO SERVICE-LOAD LEVEL.
ALL OTHER RESPONSES ARE AT FACTORED LOAD LEVEL.

NODE	INNER CAGE psi	OUTER CAGE psi	MAX STRESS TO YIELD ratio	CRACK WIDTH inches
1	27761.11	-7207.88	0.4627	0.00958
2	26692.43	-6978.03	0.4449	0.00901
3	23053.76	-6304.11	0.3842	0.00708
4	17770.31	-5354.89	0.2962	0.00429
5	11660.53	-4216.36	0.1943	0.00106
6	5382.64	-2865.17	0.0897	0.00000
7	-225.29	-1223.83	0.0204	0.00000
8	-2257.13	6671.58	0.1112	0.00000
9	-4598.71	12763.75	0.2127	0.00000
10	-6182.74	19751.09	0.3292	0.00321
11	-7064.46	22483.50	0.3747	0.00385
12	-7076.71	22133.92	0.3689	0.00211
13	-6521.22	20318.95	0.3386	0.00000
14	-4876.61	15890.88	0.2648	0.00000
15	-7186.25	22251.41	0.3709	0.00039
16	-8470.52	27027.29	0.4505	0.00574
17	-7722.13	24259.50	0.4043	0.00503
18	-5843.18	14388.88	0.2398	0.00000
19	-3371.16	4437.59	0.0740	0.00000
20	-808.97	-808.97	0.0135	0.00000

ASSESSMENT SUMMARY CONCRETE-GROUP 1, LOAD-STEP 13

LRFD SUMMARY EVALUATION FOR GROUP 1, LOAD STEP 13

DESIGN-CRITERION	CONTROL NODE	FACTORED DEMAND	FACTORED CAPACITY	RATIO VALUE
STEEL YIELDING (psi)	1	27761.1	60000.0	0.463
CONCRETE CRUSHING (psi)	1	3300.1	4875.0	0.677
SHEAR FAILURE (lbs/in)	17	762.6	1537.8	0.496
RADIAL-TENSION FAIL (psi)	1	13.5	69.6	0.194

LRFD SERVICE-LOAD PERFORMANCE MEASURES FOR GROUP 1, LOAD STEP 13

NODE NUMBER FOR MAXIMUM CRACK WIDTH 1

MAXIMUM CRACK WIDTH AT SERVICE LOAD (inches) 0.00958

LRFD RATIO: MAX-CRACK-WIDTH / ALLOWABLE 0.96

28x10c3REC.out

```
SPAN LENGTH FOR AUXILIARY EQUATIONS (inches)......    348.00



* * * * NORMAL EXIT FROM CANDE * * * *
```

28x10c4REC.out

```
*** WELCOME TO CANDE-2013(version 3/1/2013) ***

MASTER CONTROL AND PIPE-TYPE DATA FOR PROBLEM #  1

        USER TITLE: 28x8C4

        EXECUTION MODE ..................   ANALYS

        SOLUTION LEVEL ..................  #2 AUTO

        METHODOLOGY (LRFD OR SERVICE) ...     LRFD

        NUMBER OF PIPE-ELEMENT GROUPS ....       1

        MAXIMUM ITERATIONS PER STEP ......      30


        CULVERT PIPE-TYPE ............... CONCRETE

        CANNED MESH CODE # ..............        3

        NUMBER OF BEAM ELEMENTS .........       19

        CONCRETE MATERIAL PROPERTIES ARE AS FOLLOWS

             COMPRESSION STRENGTH (psi)..........       6500.000

             ELASTIC YOUNGS MODULUS (psi)........    4595487.000

             POISSON RATIO ......................          0.170

             CONCRETE DENSITY (pcf) .............        150.000

             INITIAL TENSILE CRACKING STRAIN.....       0.000010

             INITIAL COMPRESSION YIELD STRAIN....       0.000687

             INITIAL COMPRESSION CRUSH STRAIN ...       0.002000

             SHEAR STRENGTH MODEL (NSHEAR) # ...          1
             (VARIABLE STRENGTH MODEL PRINTED IN OUTPUT)

             CONCRETE CRACK-WIDTH MODEL NAME.....   HEGER-McGRATH
             (DRIVEN BY TENSILE STRAIN IN STEEL)

        STEEL REINFORCEMENT MATERIAL PROPERTIES

             TYPE OF STEEL CAGES (RSHAPE) .......     ARBIT

             STEEL YIELD STRENGTH (psi)..........      60000.000

             STEEL ELASTIC MODULUS (psi).........   29000000.000
```

28x10c4REC.out

STEEL POISSON RATIO 0.300000

STEEL YIELDING STRAIN 0.001883

NONLINEAR MODELING CODE (1,2,3) 3

STEEL-BASED CRACKWIDTH PREDICTION PARAMETERS

REBAR SPACING INNER ROW (SLI), (in) 4.00
REBAR SPACING OUTER ROW (SLO), (in) 4.00
NUMBER OF STEEL LAYERS FOR INNER CAGE 1
NUMBER OF STEEL LAYERS FOR OUTER CAGE 1
HEGER-MCGRATH CODE NUMBER FOR STEEL TYPE.. 3

WALL THICKNESS, REBAR AREAS AND COVER DEPTHS

WALL-THICK	INNER-REBAR	OUTER-REBAR	INNER-COVER	OUTER COVER
10.0000	0.1980	0.0750	2.0000	2.4375
10.0000	0.1980	0.0750	2.0000	2.4375
10.0000	0.1980	0.0750	2.0000	2.4375
10.0000	0.1980	0.0750	2.0000	2.4375
10.0000	0.1980	0.0750	2.0000	2.4375
10.0000	0.1980	0.0750	2.0000	2.4375
10.0630	0.1980	0.0750	2.0000	2.4375
10.0630	0.1980	0.0750	2.0000	2.4375
10.0630	0.1100	0.1500	2.0000	2.4375
10.6250	0.1100	0.1500	2.0000	2.4375
12.3130	0.1100	0.1500	2.0000	2.4375
15.1250	0.1100	0.1500	2.0000	2.4375
19.1250	0.1100	0.1500	2.0000	2.4375
27.0000	0.1100	0.1500	2.0000	2.4375
18.3130	0.1100	0.1500	2.0000	2.4375
13.5630	0.1100	0.1500	2.0000	2.4375
12.0000	0.1100	0.1500	2.0000	2.4375
12.0000	0.0500	0.1500	2.0000	2.4375
12.0000	0.0500	0.1500	2.0000	2.4375
12.0000	0.0500	0.1500	2.0000	2.4375

LRFD RESISTANCE FACTORS FOR STRENGTH-LIMIT STATES
AND CRACK-WIDTH LIMIT AT SERVICE LOAD

YIELDING OF REINFORCEMENT STEEL 1.000

CRUSHING OF CONCRETE OUTER FIBER..... 0.750

SHEARING FAILURE OF CONCRETE 0.900

SPLITTING OF CONCRETE IN RADIAL TENSION 0.900

ALLOWABLE CRACKWIDTH SERVICE LOAD (inch).... 0.010

LARGE DEFORMATION/BUCKLING CODE, IBUCK = 0
IBUCK=0, MEANS SMALL DEFORMATION THEORY FOR GROUP
AND NO BUCKLING PREDICTION.

28x10c4REC.out

```
- - - - - - - - - - - - - - - - - - - - - - - - - - - - - - - - - - - - - - - -


 REVIEW SYSTEM INPUT DATA


 LEVEL-2 DATA FOR ARCH-TYPE CANNED MESH


    *** MESH PARAMETERS ***
     TYPE OF MESH ------------------------------------- TREN
     DEPTH OF TRENCH ABOVE FOOTING LEVEL (FT) ---------   12.42
     WIDTH OF TRENCH AT FOOTING LEVEL (FT) ------------    5.00
     SLOPE OF TRENCH WALL (H/V) -----------------------    0.00
     MESH SPACING PARAMETER ---------------------------    1.00
     TOTAL SOIL HEIGHT ABOVE CROWN (FT) ---------------    2.00
     MESH HEIGHT ABOVE CROWN (FT) ----------------------    2.00
     SOIL DENSITY ABOVE MESH (PCF) --------------------  140.00
     NUMBER OF ELEMENT LAYERS ABOVE CROWN -------------    3


*** ARCH PARAMETERS ***
     CENTERLINE RISE OF ARCH (IN) ----------------------  125.00
     BOTTOM HALF SPAN OF ARCH (IN) ---------------------  174.00
     SIDE RISE OF ARCH ABOVE FOOTING (IN) -------------   50.94
     FOOTING DEPTH (IN) --------------------------------   24.00
     OUTSIDE FOOTING WIDTH (IN) ------------------------   30.00
     INSIDE FOOTING WIDTH (IN) -------------------------   30.00
     NUMBER OF ARCH SEGMENTS DEFINED -------------------    3

*** CURVED TOP SEGMENT ***
     RADIUS (IN) ---------------------------------------  405.88
     CENTRAL ANGLE (DEG) -------------------------------   24.59
     SEGMENT ARC LENGTH (IN) ---------------------------  174.19
     NUMBER OF BEAM ELEMENTS IN SEGMENT ----------------   13

*** CURVED CORNER SEGMENT ***
     RADIUS (IN) ---------------------------------------  133.94
     CENTRAL ANGLE (DEG) -------------------------------   16.14
     SEGMENT ARC LENGTH (IN) ---------------------------   37.73
     NUMBER OF BEAM ELEMENTS IN SEGMENT ----------------    3

*** STRAIGHT SIDE SEGMENT ***
     DEFLECTION ANGLE (DEG) ----------------------------   90.00
     SEGMENT LENGTH (IN) -------------------------------   50.94
     NUMBER OF BEAM ELEMENTS IN SEGMENT ----------------    3

 FINITE ELEMENT INPUT CONTROLS (PREP)


THE DATA TO BE RUN IS ENTITLED ...

New Level 2 arch mesh

PRINT AND PLOT CONTROL CODES ...
  PRINT CONTROL FOR MESH DATA------------    1
  PLOT FILE CONTROL MESH & RESULS--------    3
  PRINT FINITE ELEMENT RESULTS ----------    1
  INPUT DATA CHECK CODE------------------    0
                                  Page 3
```

28x10c4REC.out

```
KEY NUMBERS DESCRIBING MESH ...
  THE NUMBER OF LOAD STEPS IS------------   13
  TOTAL NUMBER OF NODES IS---------------  244
  TOTAL NUMBER OF ELEMENTS IS------------  209
  TOTAL NUMBER OF BEAM ELEMENTS IS-------   19
  MAX NUMBER OF BOUNDARY CONDITIONS IS---   36


 EXTENDED LEVEL-2: CHANGES TO CANNED MESH

          * NUMBER OF NODES TO BE CHANGED -------      0 *
          * NUMBER OF ELEMENTS TO BE CHANGED ----      0 *
          * ADDITIONAL BOUNDARY CONDITIONS ------     31 *


 * * * BOUNDARY CONDITIONS * * *
  (FORCES = LBS; DISPLACEMENTS = INCHES; ROTATIONS = DEGREES)

  BOUNDARY      LOAD      X-FORCE     OR      Y-FORCE     OR      X-Y ROTATION
BEAM ROTATIONAL
     NODE       STEP      X-DISPLACEMENT      Y-DISPLACEMENT
BOUNDARY CONDITIONS

      228         9    F =   0.0000E+00    F =  -0.1395E+03      0.0000E+00
     F
      228        10    F =   0.0000E+00    F =  -0.1395E+03      0.0000E+00
     F
      228        11    F =   0.0000E+00    F =  -0.1395E+03      0.0000E+00
     F
      228        12    F =   0.0000E+00    F =  -0.1395E+03      0.0000E+00
     F
      230         9    F =   0.0000E+00    F =  -0.1395E+03      0.0000E+00
     F
      230        10    F =   0.0000E+00    F =  -0.1395E+03      0.0000E+00
     F
      230        11    F =   0.0000E+00    F =  -0.1395E+03      0.0000E+00
     F
      230        12    F =   0.0000E+00    F =  -0.1395E+03      0.0000E+00
     F
      224         9    F =   0.0000E+00    F =  -0.4800E+01      0.0000E+00
     F
      225         9    F =   0.0000E+00    F =  -0.9600E+01      0.0000E+00
     F
      226         9    F =   0.0000E+00    F =  -0.9600E+01      0.0000E+00
     F
      227         9    F =   0.0000E+00    F =  -0.9600E+01      0.0000E+00
     F
      228         9    F =   0.0000E+00    F =  -0.9600E+01      0.0000E+00
     F
      229         9    F =   0.0000E+00    F =  -0.9600E+01      0.0000E+00
     F
      230         9    F =   0.0000E+00    F =  -0.9600E+01      0.0000E+00
```

28x10c4REC.out

```
F
 231          9    F =   0.0000E+00    F =  -0.9600E+01      0.0000E+00
F
 232          9    F =   0.0000E+00    F =  -0.9600E+01      0.0000E+00
F
 233          9    F =   0.0000E+00    F =  -0.9600E+01      0.0000E+00
F
 224         13    F =   0.0000E+00    F =  -0.2188E+01      0.0000E+00
F
 225         13    F =   0.0000E+00    F =  -0.4375E+01      0.0000E+00
F
 226         13    F =   0.0000E+00    F =  -0.4375E+01      0.0000E+00
F
 227         13    F =   0.0000E+00    F =  -0.4375E+01      0.0000E+00
F
 228         13    F =   0.0000E+00    F =  -0.4375E+01      0.0000E+00
F
 229         13    F =   0.0000E+00    F =  -0.4375E+01      0.0000E+00
F
 230         13    F =   0.0000E+00    F =  -0.4375E+01      0.0000E+00
F
 231         13    F =   0.0000E+00    F =  -0.4375E+01      0.0000E+00
F
 232         13    F =   0.0000E+00    F =  -0.4375E+01      0.0000E+00
F
 233         13    F =   0.0000E+00    F =  -0.4375E+01      0.0000E+00
F
 234         13    F =   0.0000E+00    F =  -0.4375E+01      0.0000E+00
F
 235         13    F =   0.0000E+00    F =  -0.4375E+01      0.0000E+00
F
 236         13    F =   0.0000E+00    F =  -0.4375E+01      0.0000E+00
F

* * * * * COMPLETED MESH GENERATION  * * * * *

New Level 2 arch mesh

CALCULATED KEY NUMBERS ...
  THE NUMBER OF DATA ERRORS IS-----------    0
  THE NUMBER OF SOIL MATERIALS IS--------    3
  THE NUMBER OF PIPE-TYPE GROUPS IS------    1
  THE NUMBER OF INTERFACE MATERIALS IS---   19
  BAND WIDTH ESTIMATE (MAX)--------------   88


* * * * MESH DATA HAS BEEN SAVED ON UNIT 14 * * * *


 BEAM-NODE SEQUENCE NUMBERS FOR EACH GROUP


    BEAM-ELEMENT GROUP NUMBER =    1

     BEAM-NODE       MESH-NODE      CONNECTED-GROUP-ELEMENTS
     SEQUENCE        NUMBER         FOREWARD-#     BACKWARD-#
         1             198              1              0
         2             194              2              1
         3             190              3              2
         4             167              4              3
```

5	164	5	4
6	161	6	5
7	158	7	6
8	138	8	7
9	136	9	8
10	134	10	9
11	132	11	10
12	130	12	11
13	128	13	12
14	118	14	13
15	115	15	14
16	109	16	15
17	103	17	16
18	97	18	17
19	91	19	18
20	80	0	19

```
MATERIAL DESCRIPTION FOR SOILS AND INTERFACE
(ALL DENSITY UNITS ARE pcf, ALL MODULUS UNITS ARE psi)

   PROPERTIES FOR MATERIAL  1   ********in site

        DENSITY =    0.14000E+03

        YOUNGS MODULUS= 0.5000E+04
        POISSONS RATIO= 0.3500E+00
        CONFINED MOD.= 0.8025E+04
        LATERAL COEFF.= 0.5385E+00

   PROPERTIES FOR MATERIAL  2   ********Footing

        DENSITY =    0.15000E+03

        YOUNGS MODULUS= 0.3122E+07
        POISSONS RATIO= 0.1700E+00
        CONFINED MOD.= 0.3356E+07
        LATERAL COEFF.= 0.2048E+00

   PROPERTIES FOR MATERIAL  3   ********SW95

        DENSITY =    0.14000E+03

   CONTROLS FOR DUNCAN SOIL MODEL
   WITH SELIG HYPERBOLIC BULK MODULUS FORMULATION

         LRFD STRESS CONTROL..........       0

         ENTERING ELEMENT RATIO.......      0.5000


   HYPERBOLIC STRESS-STRAIN PARAMETERS


         SOIL CLASSIFICATION ............SW95
```

COHESION INTERCEPT C 0.0000

FRICTION ANGLE PHIO (DEG)..... 48.0000

10-FOLD REDUCTION IN PHIO(DEG).. 8.0000

SCALED MODULUS NUMBER ZK 950.0000

MODULUS EXPONENT ZN 0.6000

FAILURE RATIO RF 0.7000

INIT. BULK MODULUS NUMBER BI.... 74.8000

ULT. VOLUMETRIC STRAIN EU 0.0200

INTERFACE ELEMENT MATERIAL-GROUP PROPERTIES

MAT. NO.	NORMAL-ANGLE	COEF-FRICTION	TENSILE-RUPTURE	INITIAL-GAP
1	90.00	0.40000	10.00000	0.00000
2	88.11	0.40000	10.00000	0.00000
3	86.22	0.40000	10.00000	0.00000
4	84.32	0.40000	10.00000	0.00000
5	82.43	0.40000	10.00000	0.00000
6	80.54	0.40000	10.00000	0.00000
7	78.65	0.40000	10.00000	0.00000
8	76.76	0.40000	10.00000	0.00000
9	74.87	0.40000	10.00000	0.00000
10	72.97	0.40000	10.00000	0.00000
11	71.08	0.40000	10.00000	0.00000
12	69.19	0.40000	10.00000	0.00000
13	67.30	0.40000	10.00000	0.00000
14	65.41	0.40000	10.00000	0.00000
15	10.46	0.40000	10.00000	0.00000
16	5.11	0.40000	10.00000	0.00000
17	0.00	0.40000	10.00000	0.00000
18	0.00	0.40000	10.00000	0.00000
19	0.00	0.40000	10.00000	0.00000

LRFD TOTAL LOAD FACTORS PER LOAD STEP

LOAD STEP	LOAD FACTOR	USER COMMENT
1	1.000	Factor for load step #1
2	1.000	Factor for load step #2
3	1.000	Factor for load step #3
4	1.000	Factor for load step #4
5	1.000	Factor for load step #5
6	1.000	Factor for load step #6
7	1.000	Factor for load step #7

28x10c4REC.out

8	1.000	Factor for load step #8
9	1.000	Factor for load step #9
10	1.000	Factor for load step #10
11	1.000	Factor for load step #11
12	1.000	Factor for load step #12
13	1.000	Factor for load step #13

+ +

SOLUTION OUTPUT RESULTS

+ +

FINITE ELEMENT OUTPUT FOR LOAD STEP 12

+ +

CONCRETE, FACTORED-EVALUATION FOR GROUP 1, LOAD-STEP 12

STRUCTURAL RESPONSES OF CONCRETE-GROUP 1, LOAD-STEP 12
COORDINATES, DISPLACEMENTS AND CRACK DEPTHS ARE INCHES
Y-BAR IS "NEUTRAL AXIS" LOCATION FROM INTERIOR, INCHES
PRESSURES ARE LB/IN**2
MOMENTS ARE IN-LB/IN
THRUST AND SHEAR ARE LB/IN

LOCAL NODE	X-COORD. Y-COORD.	X-DISP. Y-DISP.	N-PRES. S-PRES.	MOMENT THRUST	Y-BAR CRACK DEPTH
1	0.00	0.00000E+00	-0.23618E+01	0.20618E+05	0.66148E+01
	125.00	-0.15435E+01	-0.63786E+00	-0.12701E+04	0.60507E+01
2	13.42	-0.48412E-03	-0.22542E+01	0.20600E+05	0.66148E+01
	124.78	-0.15341E+01	-0.18636E+00	-0.12731E+04	0.60488E+01
3	26.80	0.27498E-03	-0.21466E+01	0.20583E+05	0.66148E+01
	124.11	-0.15060E+01	0.26513E+00	-0.12731E+04	0.60487E+01
4	40.15	0.35212E-02	-0.48214E+01	0.20590E+05	0.66148E+01
	123.01	-0.14593E+01	0.17857E+01	-0.12606E+04	0.60472E+01
5	53.46	0.10469E-01	-0.10547E+02	0.20133E+05	0.66148E+01
	121.47	-0.13944E+01	0.25809E+01	-0.12345E+04	0.60460E+01
6	66.71	0.22228E-01	-0.13308E+02	0.18174E+05	0.65476E+01
	119.48	-0.13122E+01	-0.44386E+00	-0.12270E+04	0.59599E+01
7	79.89	0.39499E-01	-0.17040E+02	0.14215E+05	0.65930E+01

28x10c4REC.out

	117.06	-0.12154E+01	-0.38156E+01	-0.12678E+04	0.57991E+01
8	92.98	0.62317E-01	-0.21980E+02	0.76025E+04	0.63124E+01
	114.21	-0.11086E+01	-0.87809E+01	-0.13715E+04	0.46164E+01
9	105.97	0.89903E-01	-0.10568E+02	-0.25017E+04	0.36241E+01
	110.92	-0.99761E+00	-0.36330E+01	-0.14812E+04	0.37381E+01
10	118.85	0.12020E+00	-0.17597E+02	-0.14001E+05	0.30809E+01
	107.21	-0.89013E+00	-0.70348E+01	-0.15852E+04	0.66711E+01
11	131.59	0.14995E+00	-0.55472E+01	-0.28121E+05	0.34674E+01
	103.08	-0.79583E+00	-0.22184E+01	-0.16849E+04	0.81960E+01
12	144.19	0.17696E+00	-0.57662E+01	-0.42678E+05	0.40809E+01
	98.53	-0.71894E+00	-0.23079E+01	-0.17567E+04	0.10355E+02
13	156.64	0.20086E+00	-0.59599E+01	-0.57719E+05	0.49117E+01
	93.56	-0.65730E+00	-0.23842E+01	-0.18329E+04	0.13374E+02
14	168.91	0.22264E+00	-0.71966E+01	-0.73305E+05	0.57315E+01
	88.19	-0.60619E+00	-0.75945E+01	-0.20402E+04	0.19380E+02
15	171.76	0.26613E+00	-0.71704E+01	-0.63751E+05	0.47460E+01
	75.95	-0.59543E+00	-0.16913E+01	-0.21914E+04	0.12755E+02
16	173.47	0.29880E+00	-0.93609E+01	-0.52815E+05	0.37441E+01
	63.50	-0.59017E+00	-0.17937E+01	-0.21508E+04	0.92916E+01
17	174.00	0.31125E+00	-0.10051E+02	-0.40836E+05	0.33970E+01
	50.94	-0.58875E+00	0.40055E-01	-0.21150E+04	0.80888E+01
18	174.00	0.29158E+00	-0.69106E+01	-0.25667E+05	0.34814E+01
	33.96	-0.58749E+00	0.21971E+01	-0.20930E+04	0.76798E+01
19	174.00	0.24359E+00	-0.23786E+01	-0.12490E+05	0.36437E+01
	16.98	-0.58647E+00	0.95152E+00	-0.20840E+04	0.64613E+01
20	174.00	0.18507E+00	0.21534E+01	0.20441E-09	0.61687E+01
	0.00	-0.58580E+00	-0.29405E+00	-0.20855E+04	0.00000E+00

SHEAR FORCE DIAGNOSTCS FOR CONCRETE-GROUP 1, LOAD STEP 12
-- V-factor is coefficient of sqrt(PFPC) equal to capacity.
-- Shear depth "d" is negative if measured from outer wall.
-- Stirrup load is excess shear force above capacity.

NODE	EQUIVALENT V-factor	SHEAR CAPACITY lbs/inch	APPLIED SHEAR lbs/inch	APPLIED/ CAPACITY ratio	SHEAR DEPTH-d inches	STIRRUP LOAD lbs/inch
1	2.76	1781.81	1.39	0.001	8.00	0.00
2	2.76	1782.06	1.29	0.001	8.00	0.00
3	2.76	1782.07	0.38	0.000	8.00	0.00
4	2.76	1781.02	16.81	0.009	8.00	0.00
5	2.76	1778.83	90.13	0.051	8.00	0.00
6	2.76	1778.20	220.82	0.124	8.00	0.00
7	2.74	1783.65	394.50	0.221	8.06	0.00
8	4.50	2923.16	623.82	0.213	8.06	0.00
9	4.50	2764.55	806.19	0.292	-7.63	0.00
10	3.88	2563.28	956.07	0.373	-8.19	0.00

28x10c4REC.out

11	2.51	1997.53	1070.13	0.536	-9.88	0.00
12	1.93	1970.46	1104.44	0.560	-12.69	0.00
13	1.68	2260.38	1142.92	0.506	-16.69	0.00
14	1.43	2838.22	201.30	0.071	-24.56	0.00
15	1.69	2168.91	-815.29	0.376	-15.88	0.00
16	2.05	1838.65	-911.36	0.496	-11.13	0.00
17	2.26	1741.18	-923.12	0.530	-9.56	0.00
18	2.32	1786.09	-834.70	0.467	-9.56	0.00
19	3.80	2926.90	-755.83	0.258	-9.56	0.00
20	4.50	3625.40	-715.45	0.197	10.00	0.00

STRESS AND STRAIN MEASURES FOR CONCRETE-GROUP 1, LOAD STEP 12

NODE	MAXIMUM COMPRESSION psi	AVERAGE SHEAR psi	RADIAL TENSION psi	INNER-WALL STRAIN in/in	OUTER-WALL STRAIN in/in
1	-1904.98	0.18	6.72	0.6421E-03	-0.4026E-03
2	-1904.16	0.17	6.71	0.6413E-03	-0.4024E-03
3	-1901.13	0.05	6.72	0.6403E-03	-0.4017E-03
4	-1896.43	2.16	6.69	0.6384E-03	-0.4007E-03
5	-1853.10	11.58	6.55	0.6241E-03	-0.3916E-03
6	-1676.15	28.38	5.70	0.5473E-03	-0.3542E-03
7	-1311.72	50.29	4.13	0.4006E-03	-0.2772E-03
8	-703.06	79.53	1.34	0.1444E-03	-0.1486E-03
9	-703.06	102.77	0.00	-0.9220E-04	0.5449E-04
10	-1451.79	113.73	0.00	-0.3068E-03	0.5445E-03
11	-1987.57	106.01	0.00	-0.4200E-03	0.8661E-03
12	-1972.28	85.57	0.00	-0.4168E-03	0.9365E-03
13	-1727.95	67.60	0.00	-0.3651E-03	0.8824E-03
14	-1206.37	8.12	0.00	-0.2549E-03	0.6838E-03
15	-2072.15	-50.66	0.00	-0.4379E-03	0.1038E-02
16	-2970.37	-80.34	0.00	-0.6277E-03	0.1397E-02
17	-2975.89	-94.38	0.00	-0.6289E-03	0.1331E-02
18	-2073.07	-85.34	0.00	-0.4381E-03	0.8065E-03
19	-1036.65	-77.27	0.00	-0.2191E-03	0.2772E-03
20	-156.26	-73.14	0.00	-0.3302E-04	-0.3302E-04

STEEL STRESS AND CRACK WIDTHS FOR CONCRETE-GROUP 1, LOAD STEP 12
NOTE: CRACK WIDTH IS REDUCED TO SERVICE-LOAD LEVEL.
ALL OTHER RESPONSES ARE AT FACTORED LOAD LEVEL.

NODE	INNER CAGE psi	OUTER CAGE psi	MAX STRESS TO YIELD ratio	CRACK WIDTH inches
1	13803.75	-4714.05	0.2301	0.00219
2	13785.20	-4715.85	0.2298	0.00218
3	13763.58	-4708.25	0.2294	0.00217
4	13720.71	-4699.32	0.2287	0.00215
5	13414.35	-4589.79	0.2236	0.00198
6	11694.85	-4285.14	0.1949	0.00107
7	8473.15	-3601.54	0.1412	0.00000
8	2746.09	-2473.14	0.0458	0.00000
9	-2009.18	604.18	0.0335	0.00000
10	-4670.12	11128.36	0.1855	0.00000
11	-6727.71	19486.20	0.3248	0.00216
12	-7579.35	22893.29	0.3816	0.00254

28x10c4REC.out

13	-7478.97	23052.46	0.3842	0.00039
14	-5908.16	19089.49	0.3182	0.00000
15	-8818.11	26815.91	0.4469	0.00297
16	-10487.82	32928.50	0.5488	0.00907
17	-9629.64	29736.05	0.4956	0.00812
18	-7350.15	17645.41	0.2941	0.00129
19	-4345.16	5621.86	0.0937	0.00000
20	-1052.26	-1052.26	0.0175	0.00000

ASSESSMENT SUMMARY CONCRETE-GROUP 1, LOAD-STEP 12

LRFD SUMMARY EVALUATION FOR GROUP 1, LOAD STEP 12

DESIGN-CRITERION	CONTROL NODE	FACTORED DEMAND	FACTORED CAPACITY	RATIO VALUE
STEEL YIELDING (psi)	16	32928.5	60000.0	0.549
CONCRETE CRUSHING (psi)	17	2975.9	4875.0	0.610
SHEAR FAILURE (lbs/in)	12	1104.4	1773.4	0.623
RADIAL-TENSION FAIL (psi)	3	6.7	69.6	0.097

LRFD SERVICE-LOAD PERFORMANCE MEASURES FOR GROUP 1, LOAD STEP 12

NODE NUMBER FOR MAXIMUM CRACK WIDTH 16

MAXIMUM CRACK WIDTH AT SERVICE LOAD (inches) 0.00907

LRFD RATIO: MAX-CRACK-WIDTH / ALLOWABLE 0.91

SPAN LENGTH FOR AUXILIARY EQUATIONS (inches)..... 348.00

+ +

FINITE ELEMENT OUTPUT FOR LOAD STEP 13

+ +

CONCRETE, FACTORED-EVALUATION FOR GROUP 1, LOAD-STEP 13

STRUCTURAL RESPONSES OF CONCRETE-GROUP 1, LOAD-STEP 13
COORDINATES, DISPLACEMENTS AND CRACK DEPTHS ARE INCHES
Y-BAR IS "NEUTRAL AXIS" LOCATION FROM INTERIOR, INCHES
PRESSURES ARE LB/IN**2
MOMENTS ARE IN-LB/IN
THRUST AND SHEAR ARE LB/IN

28x10c4REC.out

LOCAL NODE	X-COORD. Y-COORD.	X-DISP. Y-DISP.	N-PRES. S-PRES.	MOMENT THRUST	Y-BAR CRACK DEPTH
1	0.00	0.00000E+00	-0.25920E+01	0.21308E+05	0.66148E+01
	125.00	-0.15763E+01	-0.64000E+00	-0.12977E+04	0.60591E+01
2	13.42	-0.49339E-03	-0.24853E+01	0.21276E+05	0.66148E+01
	124.78	-0.15666E+01	-0.20120E+00	-0.13009E+04	0.60568E+01
3	26.80	0.29690E-03	-0.23785E+01	0.21215E+05	0.66148E+01
	124.11	-0.15376E+01	0.23761E+00	-0.13013E+04	0.60554E+01
4	40.15	0.36517E-02	-0.50539E+01	0.21149E+05	0.66148E+01
	123.01	-0.14894E+01	0.17573E+01	-0.12894E+04	0.60518E+01
5	53.46	0.10816E-01	-0.10774E+02	0.20590E+05	0.66148E+01
	121.47	-0.14225E+01	0.25382E+01	-0.12640E+04	0.60477E+01
6	66.71	0.22917E-01	-0.13443E+02	0.18502E+05	0.65476E+01
	119.48	-0.13379E+01	-0.52778E+00	-0.12577E+04	0.59590E+01
7	79.89	0.40663E-01	-0.17234E+02	0.14403E+05	0.65930E+01
	117.06	-0.12385E+01	-0.39017E+01	-0.13000E+04	0.57937E+01
8	92.98	0.64079E-01	-0.22325E+02	0.76294E+04	0.63124E+01
	114.21	-0.11289E+01	-0.88398E+01	-0.14050E+04	0.45912E+01
9	105.97	0.92360E-01	-0.10763E+02	-0.26828E+04	0.36457E+01
	110.92	-0.10151E+01	-0.36957E+01	-0.15160E+04	0.38426E+01
10	118.85	0.12339E+00	-0.17989E+02	-0.14410E+05	0.30809E+01
	107.21	-0.90500E+00	-0.71953E+01	-0.16221E+04	0.66788E+01
11	131.59	0.15385E+00	-0.56173E+01	-0.28812E+05	0.34674E+01
	103.08	-0.80846E+00	-0.22457E+01	-0.17237E+04	0.81991E+01
12	144.19	0.18149E+00	-0.60254E+01	-0.43645E+05	0.40809E+01
	98.53	-0.72976E+00	-0.24094E+01	-0.17971E+04	0.10357E+02
13	156.64	0.20596E+00	-0.62843E+01	-0.58992E+05	0.49117E+01
	93.56	-0.66667E+00	-0.25185E+01	-0.18756E+04	0.13376E+02
14	168.91	0.22826E+00	-0.75910E+01	-0.74923E+05	0.57315E+01
	88.19	-0.61434E+00	-0.77570E+01	-0.20878E+04	0.19386E+02
15	171.76	0.27278E+00	-0.73374E+01	-0.65164E+05	0.47460E+01
	75.95	-0.60332E+00	-0.17525E+01	-0.22422E+04	0.12757E+02
16	173.47	0.30624E+00	-0.95785E+01	-0.53991E+05	0.37441E+01
	63.50	-0.59794E+00	-0.18360E+01	-0.22005E+04	0.92927E+01
17	174.00	0.31904E+00	-0.10243E+02	-0.41750E+05	0.33970E+01
	50.94	-0.59648E+00	0.33505E-01	-0.21636E+04	0.80899E+01
18	174.00	0.29901E+00	-0.70653E+01	-0.26241E+05	0.34814E+01
	33.96	-0.59519E+00	0.22212E+01	-0.21411E+04	0.76814E+01
19	174.00	0.24999E+00	-0.24428E+01	-0.12768E+05	0.36437E+01
	16.98	-0.59415E+00	0.97711E+00	-0.21316E+04	0.64739E+01
20	174.00	0.19017E+00	0.21797E+01	0.18622E-09	0.61687E+01

0.00 -0.59346E+00 -0.26698E+00 -0.21327E+04 0.00000E+00

SHEAR FORCE DIAGNOSTCS FOR CONCRETE-GROUP 1, LOAD STEP 13
-- V-factor is coefficient of sqrt(PFPC) equal to capacity.
-- Shear depth "d" is negative if measured from outer wall.
-- Stirrup load is excess shear force above capacity.

NODE	EQUIVALENT V-factor	SHEAR CAPACITY lbs/inch	APPLIED SHEAR lbs/inch	APPLIED/ CAPACITY ratio	SHEAR DEPTH-d inches	STIRRUP LOAD lbs/inch
1	2.77	1784.12	1.38	0.001	8.00	0.00
2	2.77	1784.39	3.46	0.002	8.00	0.00
3	2.77	1784.43	4.73	0.003	8.00	0.00
4	2.77	1783.43	23.33	0.013	8.00	0.00
5	2.76	1781.30	98.77	0.055	8.00	0.00
6	2.76	1780.77	230.89	0.130	8.00	0.00
7	2.75	1786.33	405.74	0.227	8.06	0.00
8	4.50	2923.16	637.58	0.218	8.06	0.00
9	4.50	2764.55	822.44	0.297	-7.63	0.00
10	3.87	2551.86	975.07	0.382	-8.19	0.00
11	2.50	1993.27	1090.98	0.547	-9.88	0.00
12	1.92	1968.70	1126.19	0.572	-12.69	0.00
13	1.68	2261.55	1167.21	0.516	-16.69	0.00
14	1.43	2840.63	206.03	0.073	-24.56	0.00
15	1.70	2171.75	-832.90	0.384	-15.88	0.00
16	2.05	1841.77	-931.23	0.506	-11.13	0.00
17	2.26	1744.42	-943.56	0.541	-9.56	0.00
18	2.32	1789.62	-853.44	0.477	-9.56	0.00
19	3.80	2932.73	-772.71	0.263	-9.56	0.00
20	4.50	3625.40	-731.24	0.202	10.00	0.00

STRESS AND STRAIN MEASURES FOR CONCRETE-GROUP 1, LOAD STEP 13

NODE	MAXIMUM COMPRESSION psi	AVERAGE SHEAR psi	RADIAL TENSION psi	INNER-WALL STRAIN in/in	OUTER-WALL STRAIN in/in
1	-1966.16	0.18	6.95	0.6642E-03	-0.4155E-03
2	-1964.21	0.45	6.94	0.6629E-03	-0.4151E-03
3	-1957.70	0.61	6.94	0.6604E-03	-0.4137E-03
4	-1947.18	3.00	6.88	0.6560E-03	-0.4115E-03
5	-1895.71	12.69	6.70	0.6383E-03	-0.4006E-03
6	-1708.21	29.67	5.80	0.5570E-03	-0.3610E-03
7	-1332.23	51.72	4.17	0.4056E-03	-0.2815E-03
8	-709.78	81.28	1.34	0.1442E-03	-0.1500E-03
9	-457.03	104.85	0.00	-0.9658E-04	0.5966E-04
10	-1492.59	115.99	0.00	-0.3154E-03	0.5608E-03
11	-2035.95	108.08	0.00	-0.4302E-03	0.8874E-03
12	-2017.06	87.26	0.00	-0.4262E-03	0.9577E-03
13	-1766.33	69.04	0.00	-0.3733E-03	0.9018E-03
14	-1233.95	8.31	0.00	-0.2608E-03	0.6994E-03
15	-2118.35	-51.75	0.00	-0.4476E-03	0.1061E-02
16	-3036.77	-82.09	0.00	-0.6417E-03	0.1428E-02
17	-3042.70	-96.47	0.00	-0.6430E-03	0.1361E-02
18	-2119.79	-87.25	0.00	-0.4479E-03	0.8245E-03
19	-1062.93	-79.00	0.00	-0.2246E-03	0.2849E-03

20	-159.79	-74.76	0.00	-0.3377E-04	-0.3377E-04

STEEL STRESS AND CRACK WIDTHS FOR CONCRETE-GROUP 1, LOAD STEP 13
NOTE: CRACK WIDTH IS REDUCED TO SERVICE-LOAD LEVEL.
ALL OTHER RESPONSES ARE AT FACTORED LOAD LEVEL.

NODE	INNER CAGE psi	OUTER CAGE psi	MAX STRESS TO YIELD ratio	CRACK WIDTH inches
1	14284.75	-4853.99	0.2381	0.00245
2	14255.02	-4853.91	0.2376	0.00243
3	14200.29	-4840.09	0.2367	0.00240
4	14102.35	-4820.68	0.2350	0.00235
5	13719.06	-4696.44	0.2287	0.00215
6	11900.77	-4372.50	0.1983	0.00118
7	8573.86	-3667.45	0.1429	0.00000
8	2733.09	-2508.61	0.0456	0.00000
9	-2088.19	695.21	0.0348	0.00000
10	-4795.66	11464.55	0.1911	0.00000
11	-6890.08	19967.29	0.3328	0.00243
12	-7751.67	23411.64	0.3902	0.00283
13	-7645.72	23559.12	0.3927	0.00067
14	-6043.14	19526.50	0.3254	0.00000
15	-9015.39	27408.67	0.4568	0.00331
16	-10723.13	33659.71	0.5610	0.00949
17	-9846.58	30399.99	0.5067	0.00850
18	-7516.67	18039.09	0.3007	0.00151
19	-4452.08	5779.78	0.0963	0.00000
20	-1076.07	-1076.07	0.0179	0.00000

ASSESSMENT SUMMARY CONCRETE-GROUP 1, LOAD-STEP 13

LRFD SUMMARY EVALUATION FOR GROUP 1, LOAD STEP 13

DESIGN-CRITERION	CONTROL NODE	FACTORED DEMAND	FACTORED CAPACITY	RATIO VALUE
STEEL YIELDING (psi)	16	33659.7	60000.0	0.561
CONCRETE CRUSHING (psi)	17	3042.7	4875.0	0.624
SHEAR FAILURE (lbs/in)	12	1126.2	1771.8	0.636
RADIAL-TENSION FAIL (psi)	1	7.0	69.6	0.100

LRFD SERVICE-LOAD PERFORMANCE MEASURES FOR GROUP 1, LOAD STEP 13

NODE NUMBER FOR MAXIMUM CRACK WIDTH 16

MAXIMUM CRACK WIDTH AT SERVICE LOAD (inches) 0.00949

LRFD RATIO: MAX-CRACK-WIDTH / ALLOWABLE 0.95

28x10c4REC.out

```
SPAN LENGTH FOR AUXILIARY EQUATIONS (inches)......    348.00


* * * * NORMAL EXIT FROM CANDE * * * *
```

DELTA
ENGINEERS, ARCHITECTS, & LAND SURVEYORS
860 Hooper Road, Endwell, NY 13760
www.deltaengineers.com
Phone: (607) 231-6600
Fax: (607) 231-6650

JOB	2014.059.004		180
DESCIPTION	28'x10' Arch Footing 1 - Min. Live Load		
SHEET NO.	OF	SCALE	
CALCULATED BY	YL	DATE	3/20/2014
CHECKED BY	SLV	DATE	3/21/14

Structure Geometry

Toe Width	1.5	ft	Stem Height	0	ft	Backfill Soil (phi)	34	deg
Wall Width	12	in	Footing Thickness	1.917	ft	Soil Weight	140	pcf
Stem Width	1	ft	Fill Height	2	ft	Ka =	0.2827	
Heel Width	3.5	ft	Structure Height	11.08	ft	LL Surcharge	3	ft
Footing Width	6	ft				Allowable Factored Brg Res.	14.1ksf	

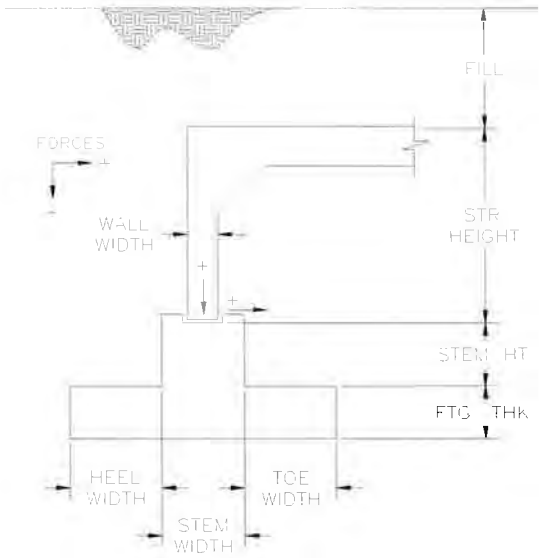

(Note: A Stem Ht. of Zero indicates a strip footing, not a pedestal footing as shown)

Pedestal Footing

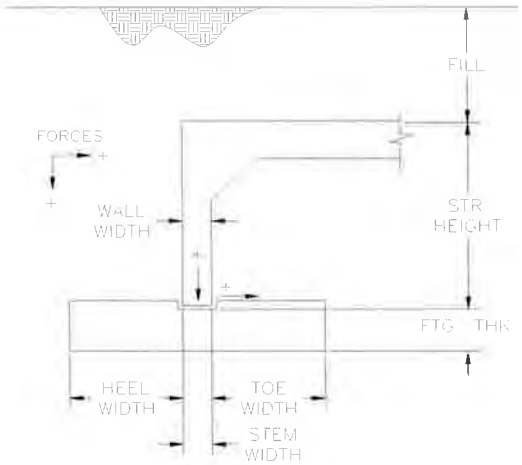

(Note: Ensure Stem Width equals Wall Width and Stem Ht. equals Zero when designing a strip footing)

Strip Footing

DELTA
ENGINEERS, ARCHITECTS, & LAND SURVEYORS
860 Hooper Road, Endwell, NY 13760
www.deltaengineers.com
Phone: (607) 231-6600
Fax: (607) 231-6650

JOB	2014.059.004		181
DESCIPTION	28'x10' Arch Footing 1 - Min. Live Load		
SHEET NO.	OF	SCALE	
CALCULATED BY	YL	DATE	3/20/2014
CHECKED BY	SLV	DATE	3/21/14

Final Condition with Live Load Effects - Sum Forces and Moments About "Heel"

Toe Width	1.5	ft
Wall Width	12	in
Stem Width	1	ft
Heel Width	3.5	ft
Footing Width	6	ft
Stem Height	0	ft
Footing Thickness	1.917	ft
Fill Height	2	ft
Structure Height	11.08	ft

Backfill Soil (phi) 34 deg

Soil Weight 140 pcf

Ka = 0.283

Limit States

Factor	Str-1a	Str-1b	Str IV	Serv
DC	1.25	0.90	1.50	1.00
DW	1.50	0.65	1.50	1.00
EH	0.90	0.90	0.90	1.00
EV	1.35	1.00	1.35	1.00
LL	1.75	1.75	0.00	1.00
LS	0.00	0.00	0.00	1.00

Resistance Factors

Sliding	0.9
Bearing	0.45
Moment	0.9
Shear	0.9

Factored Bearing Resistance 14.1ksf

Note: Downward and inward forces are positive

		Dir	Factor	Force		Arm ft		Str-1a F kips	Str-1a M k-ft	Str-1b F kips	Str-1b M k-ft	Str IV F kips	Str IV M k-ft	Str IV F kips	Str IV M k-ft
Structure Reaction		V	DC	3.49	x	4.00	=	4.36	17.45	3.14	12.56	5.24	20.94	3.49	13.96
		V	DW	0.57	x	4.00	=	0.86	3.42	0.37	1.48	0.86	3.42	0.57	2.28
		V	EH	0	x	4.00	=	0.00	0.00	0.00	0.00	0.00	0.00	0.00	0.00
		V	EV	7.53	x	4.00	=	10.17	40.66	7.53	30.1	10.17	40.66	7.53	30.12
		V	LL	3.91	x	4.00	=	6.84	27.37	6.84	27.37	0.00	0.00	3.91	15.64
		H	DC	-1.14	x	1.92	=	-1.43	-2.73	-1.03	-1.97	-1.71	-3.28	-1.14	-2.19
		H	DW	-0.18	x	1.92	=	-0.27	-0.52	-0.12	-0.22	-0.27	-0.52	-0.18	-0.35
		H	EH	0.29	x	1.92	=	0.26	0.50	0.26	0.50	0.26	0.50	0.29	0.56
		H	EV	-1.85	x	1.92	=	-2.50	-4.79	-1.85	-3.55	-2.50	-4.79	-1.85	-3.55
		H	LL	-2.19	x	1.92	=	-3.83	-7.35	-3.83	-7.35	0.00	0.00	-2.19	-4.20
		H	LS	0	x	1.92	=	0.00	0.00	0.00	0.00	0.00	0.00	0.00	0.00
Soil Above Heel		V	EV	6.411	x	1.75	=	8.65	15.15	6.41	11.22	8.65	15.15	6.41	11.22
Soil Above Stem		V	EV	0.00	x	3.50	=	0.00	0.00	0.00	0.00	0.00	0.00	0.00	0.00
EH from Soil Above		H	EH	0.993	x	0.96	=	0.89	0.86	0.89	0.86	0.89	0.86	0.99	0.95
EH on Stem FTG		H	EH	0.073	x	0.64	=	0.07	0.04	0.07	0.04	0.07	0.04	0.07	0.05
Stem Weight		V	DC	0	x	4.00	=	0.00	0.00	0.00	0.00	0.00	0.00	0.00	0.00
Ftg Weight		V	DC	1.725	x	3.00	=	2.16	6.47	1.55	4.66	2.59	7.76	1.73	5.18
Totals									96.53		75.73		80.75		69.67
Total Vertical								33.04		25.85		27.50		23.64	
Net Horizontal								-6.81		-5.61		-3.26		-4.00	
Resultant Loacation								2.92 ft		2.93 ft		2.94 ft		2.95 ft	
Eccentricity								0.08 ft		0.07 ft		0.06 ft		0.05 ft	
bf'								5.84 ft		5.86 ft		5.87 ft		5.90 ft	
Bearing Pressure								5.65 ksf		4.41 ksf		4.68 ksf		4.01 ksf	
Eccentricity within middle half								YES		YES		YES		YES	
Sliding Resistance								16.04 kips		12.55 kips		13.35 kips		11.48	

DELTA
ENGINEERS, ARCHITECTS, & LAND SURVEYORS
860 Hooper Road, Endwell, NY 13760
www.deltaengineers.com
Phone: (607) 231-6600
Fax: (607) 231-6650

JOB	2014.059.004		182
DESCIPTION	28'x10' Arch Footing 1 - Min. Live Load		
SHEET NO	OF	SCALE	
CALCULATED BY	YL	DATE	3/20/2014
CHECKED BY	SLV	DATE	3/21/14

Final Condition without Live Load Effects - Sum Forces and Moments About "Heel"

Toe Width	1.5	ft
Wall Width	12	in
Stem Width	1	ft
Heel Width	3.5	ft
Footing Width	6	ft
Stem Height	0	ft
Footing Thickness	1.917	ft
Fill Height	2	ft
Structure Height	11.08	ft

Backfill Soil (phi) 34 deg

Soil Weight 140 pcf

Ka = 0.283

Limit States

Factor	Str-1a	Str-1b	Str IV	Serv
DC	1.25	0.90	1.50	1.00
DW	1.50	0.65	1.50	1.00
EH	0.90	0.90	0.90	1.00
EV	1.35	1.00	1.35	1.00
LL	1.75	1.75	0.00	1.00
LS	0.00	0.00	0.00	1.00

Resistance Factors

Sliding	0.9
Bearing	0.45
Moment	0.9
Shear	0.9

Factored Bearing Resistance 14.1ksf

Note: Downward and inward forces are positive

		Dir	Factor	Force		Arm ft		Str-1a F kips	Str-1a M k-ft	Str-1b F kips	Str-1b M k-ft	Str IV F kips	Str IV M k-ft	Str IV F kips	Str IV M k-ft
Structure Reaction		V	DC	3.49	x	4.00	=	4.36	17.45	3.14	12.56	5.24	20.94	3.49	13.96
		V	DW	0.57	x	4.00	=	0.86	3.42	0.37	1.48	0.86	3.42	0.57	2.28
		V	EH	0	x	4.00	=	0.00	0.00	0.00	0.00	0.00	0.00	0.00	0.00
		V	EV	7.53	x	4.00	=	10.17	40.66	7.53	30.1	10.17	40.66	7.53	30.12
		V	LL	0	x	4.00	=	0.00	0.00	0.00	0.00	0.00	0.00	0.00	0.00
		H	DC	-1.14	x	1.92	=	-1.43	-2.73	-1.03	-1.97	-1.71	-3.28	-1.14	-2.19
		H	DW	-0.18	x	1.92	=	-0.27	-0.52	-0.12	-0.22	-0.27	-0.52	-0.18	-0.35
		H	EH	0.29	x	1.92	=	0.26	0.50	0.26	0.50	0.26	0.50	0.29	0.56
		H	EV	-1.85	x	1.92	=	-2.50	-4.79	-1.85	-3.55	-2.50	-4.79	-1.85	-3.55
		H	LL	0	x	1.92	=	0.00	0.00	0.00	0.00	0.00	0.00	0.00	0.00
		H	LS	0	x	1.92	=	0.00	0.00	0.00	0.00	0.00	0.00	0.00	0.00
Soil Above Heel		V	EV	6.411	x	1.75	=	8.65	15.15	6.41	11.22	8.65	15.15	6.41	11.22
Soil Above Stem		V	EV	0.00	x	3.50	=	0.00	0.00	0.00	0.00	0.00	0.00	0.00	0.00
EH from Soil Above		H	EH	0.993	x	0.96	=	0.89	0.86	0.89	0.86	0.89	0.86	0.99	0.95
EH on Stem FTG		H	EH	0.073	x	0.64	=	0.07	0.04	0.07	0.04	0.07	0.04	0.07	0.05
Stem Weight		V	DC	0	x	4.00	=	0.00	0.00	0.00	0.00	0.00	0.00	0.00	0.00
Ftg Weight		V	DC	1.725	x	3.00	=	2.16	6.47	1.55	4.66	2.59	7.76	1.73	5.18
Totals									76.51		55.70		80.75		58.23

	Str-1a	Str-1b	Str IV	Str IV
Total Vertical	26.19	19.00	27.50	19.73
Net Horizontal	-2.97	-1.77	-3.26	-1.81
Resultant Loacation	2.92 ft	2.93 ft	2.94 ft	2.95 ft
Eccentricity	0.08 ft	0.07 ft	0.06 ft	0.05 ft
bf'	5.84 ft	5.86 ft	5.87 ft	5.90 ft
Bearing Pressure	4.48 ksf	3.24 ksf	4.68 ksf	3.34 ksf
Eccentricity within middle half	YES	YES	YES	YES
Sliding Resistance	12.72 kips	9.23 kips	13.35 kips	9.58

DELTA
ENGINEERS, ARCHITECTS, & LAND SURVEYORS
860 Hooper Road, Endwell, NY 13760
www.deltaengineers.com
Phone: (607) 231-6600
Fax: (607) 231-6650

JOB	2014.059.004		183
DESCIPTION	28'x10' Arch Footing 1 - Min. Live Load		
SHEET NO	OF	SCALE	
CALCULATED BY	YL	DATE	3/20/2014
CHECKED BY	SLV	DATE	3/21/14

Stem and Footing Design Forces - Stablilty about Heel

Footing Width	6	ft
Toe width	1.5	ft
Heel Width	3.5	ft
Footing Thickness	1.917	ft
Overburden Ht over Heel	13.08	ft

Limit States

Factor	Str-1a	Str-1b	Str-IV	Serv
DC	1.25	0.90	1.50	1.00
DW	1.50	0.65	1.50	1.00
EH	0.90	0.90	0.90	1.00
EV	1.35	1.00	1.35	1.00
LL	1.75	1.75	0.00	1.00
LS	0.00	0.00	0.00	1.00

Note: Inward forces are positive, negative moment indicates inside face in tension.

Dir	Factor	Force		Arm ft		Str-1a F kips	Str-1a M k-ft	Str-1b F kips	Str-1b M k-ft	Str-IV F kips	Str-IV M k-ft	Service F kips	Service M k-ft
H	DC	-1.14	x	0	=	-1.43	0.00	-1.03	0.00	-1.71	0	-1.14	0
H	DW	-0.18	x	0	=	-0.27	0.00	-0.12	0.00	-0.27	0	-0.18	0
H	EH	0.29	x	0	=	0.26	0.00	0.26	0.00	0.26	0	0.29	0
H	EV	-1.85	x	0	=	-2.50	0.00	-1.85	0.00	-2.50	0	-1.85	0
H	LL	-2.19	x	0	=	-3.83	0.00	-3.83	0.00	0.00	0	-2.19	0
H	LS	0	x	0	=	0.00	0.00	0.00	0.00	0.00	0	0.00	0
H	EH	0	x	0	=	0.00	0.00	0.00	0.00	0.00	0	0.00	0
H	EH	0	x	0	=	0.00	0.00	0.00	0.00	0.00	0	0.00	0
Totals						-7.76	0.00	-6.56	0.00	-4.22	0.00	-5.07	0.00

Stem Design Forces:	**Mu = 0.00 k-ft**	**Ma = 0.00 k-ft**	**Vu = -7.76 k**	
FTG: B =	6 ft	6 ft	6 ft	6 ft
B/6 =	1 ft	1 ft	1 ft	1 ft
e =	0.078 ft	0.070 ft	0.064 ft	0.052 ft
Total Vertical =	33.04 k	25.85 k	27.50 k	23.64 k
Pressure @ P1 (Toe)	5.08 psf	4.01 psf	4.29 psf	3.73 psf
Pressure @ P2 (Heel)	5.94 psf	4.61 psf	4.87 psf	4.15 psf
Pressure @ FF Stem (Toe)	5.29 psf	4.16 psf	4.44 psf	3.84 psf
Pressure @ RF Stem (Heel)	5.43 psf	4.26 psf	4.53 psf	3.91 psf
Upward Bending Moment (Heel)	35.33 k-ft	27.52 k-ft	29.16 k-ft	24.90 k-ft
Upward Shear (Heel)	19.90 k	15.52 k	16.47 k	14.09 k
Downward Overburden Moment (Heel)	-15.15 k-ft	-11.22 k-ft	-15.15 k-ft	-11.22 k-ft
Downward Overburden Shear (Heel)	-8.65 k	-6.41 k	-8.65 k	-6.41 k
Downward Heel Weight Moment (Heel)	-2.20 k-ft	-1.59 k-ft	-2.64 k-ft	-1.76 k-ft
Downward Heel Weight Shear (Heel)	-1.26 k	-0.91 k	-1.51 k	-1.01 k
Net Upward Bending Moment (Heel)	17.99 k-ft	14.71 k-ft	11.37 k-ft	11.92 k-ft
Net Upward Shear (Heel)	9.99 k	8.20 k	6.30 k	6.67 k
Upward Bending Moment (Toe)	5.7915 k-ft	4.5627 k-ft	4.8828 k-ft	4.239 k-ft
Upward Shear (Toe)	7.78 k	6.12 k	6.55 k	5.68 k
Footing Design Forces:	**Upward Mu = 17.99 k-ft**	**Upward Ma = 11.92 k-ft**	**Up. Shear Vu = 9.99 k**	

DELTA
ENGINEERS, ARCHITECTS, & LAND SURVEYORS
860 Hooper Road, Endwell, NY 13760
www.deltaengineers.com
Phone: (607) 231-6600
Fax: (607) 231-6650

JOB	2014.059.004		184
DESCIPTION	28'x10' Arch Footing 1 - Min. Live Load		
SHEET NO.	OF	SCALE	
CALCULATED BY	YL	DATE	3/20/2014
CHECKED BY	SLU	DATE	3/21/14

Stem and Footing Design Forces - Stablilty about Heel - structure without live load reaction

Footing Width	6	ft
Toe width	1.5	ft
Heel Width	3.5	ft
Footing Thickness	1.917	ft
Overburned Ht over Heel	13.08	ft

Limit States

Factor	Str-1a	Str-1b	Str-IV	Serv
DC	1.25	0.90	1.50	1.00
DW	1.50	0.65	1.50	1.00
EH	0.90	0.90	0.90	1.00
EV	1.35	1.00	1.35	1.00
LL	1.75	1.75	0.00	1.00
LS	0.00	0.00	0.00	1.00

Note: Inward forces are positive, negative moment indicates inside face in tension.

Dir	Factor	Force		Arm ft		Str-1a F kips	Str-1a M k-ft	Str-1b F kips	Str-1b M k-ft	Str-IV F kips	Str-IV M k-ft	Service F kips	Service M k-ft
H	DC	-1.14	x	0	=	-1.43	0.00	-1.03	0.00	-1.71	0	-1.14	0
H	DW	-0.18	x	0	=	-0.27	0.00	-0.12	0.00	-0.27	0	-0.18	0
H	EH	0.29	x	0	=	0.26	0.00	0.26	0.00	0.26	0	0.29	0
H	EV	-1.85	x	0	=	-2.50	0.00	-1.85	0.00	-2.50	0	-1.85	0
H	LL	0	x	0	=	0.00	0.00	0.00	0.00	0.00	0	0.00	0
H	LS	0	x	0	=	0.00	0.00	0.00	0.00	0.00	0	0.00	0
H	EH	0	x	0	=	0.00	0.00	0.00	0.00	0.00	0	0.00	0
H	EH	0	x	0	=	0.00	0.00	0.00	0.00	0.00	0	0.00	0
Totals						-3.93	0.00	-2.73	0.00	-4.22	0.00	-2.88	0.00

	Str-1a	Str-1b	Str-IV	Service
Stem Design Forces:	**Mu = 0.00 k-ft**	**Ma = 0.00 k-ft**	**Vu = -4.22 k**	
FTG. B =	6 ft	6 ft	6 ft	6 ft
B/6 =	1 ft	1 ft	1 ft	1 ft
e =	0.079 ft	0.069 ft	0.064 ft	0.048 ft
Total Vertical =	26.19 k	19.00 k	27.50 k	19.73 k
Pressure @ P1 (Toe)	4.02 psf	2.95 psf	4.29 psf	3.13 psf
Pressure @ P2 (Heel)	4.71 psf	3.39 psf	4.87 psf	3.45 psf
Pressure @ FF Stem (Toe)	4.19 psf	3.06 psf	4.44 psf	3.21 psf
Pressure @ RF Stem (Heel)	4.31 psf	3.13 psf	4.53 psf	3.26 psf
Upward Bending Moment (Heel)	28.03 k-ft	20.22 k-ft	29.16 k-ft	20.73 k-ft
Upward Shear (Heel)	15.78 k	11.40 k	16.47 k	11.74 k
Downward Overburden Moment (Heel	-15.15 k-ft	-11.22 k-ft	-15.15 k-ft	-11.22 k-ft
Downward Overburden Shear (Heel)	-8.65 k	-6.41 k	-8.65 k	-6.41 k
Downward Heel Weight Moment (Hee	-2.20 k-ft	-1.59 k-ft	-2.64 k-ft	-1.76 k-ft
Downward Heel Weight Shear (Heel)	-1.26 k	-0.91 k	-1.51 k	-1.01 k
Net Upward Bending Moment (Heel)	10.69 k-ft	7.41 k-ft	11.37 k-ft	7.75 k-ft
Net Upward Shear (Heel)	5.87 k	4.09 k	6.30 k	4.32 k
Upward Bending Moment (Toe)	4.587 k-ft	3.359 k-ft	4.883 k-ft	3.551 k-ft
Upward Shear (Toe)	6.16 k	4.51 k	6.55 k	4.75 k
Footing Design Forces:	**Upward Mu = 11.37 k-ft**	**Upward Ma = 7.75 k-ft**	**Up. Shear Vu = 6.55 k**	

DELTA
ENGINEERS, ARCHITECTS, & LAND SURVEYORS
860 Hooper Road, Endwell, NY 13760
www.deltaengineers.com
Phone: (607) 231-6600
Fax: (607) 231-6650

JOB	2014.059.004		
DESCIPTION	28'x10' Arch Footing 1 - Min. Live Load		
SHEET NO	OF	SCALE	
CALCULATED BY	YL	DATE	3/21/2014
CHECKED BY	SLJ	DATE	3/24/14

Final Condition with Live Load Effects - Sum Forces and Moments About "Toe"

Toe Width	1.5 ft	Backfill Soil (phi)	34 deg	Soil Weight	140 pcf
Wall Width	12 in			Ka =	0.28
Stem Width	1 ft				
Heel Width	3.5 ft				
Footing Width	6 ft				
Stem Height	0 ft				
Footing Thickness	1.917 ft				
Fill Height	2 ft				
Structure Height	11.08 ft				

Limit States

Factor	Str-1a	Str-1b	Str IV	Serv
DC	1.25	0.90	1.50	1.00
DW	1.50	0.65	1.50	1.00
EH	1.50	1.50	1.50	1.00
EV	1.35	1.00	1.35	1.00
LL	1.75	1.75	0.00	1.00
LS	1.75	1.75	0.00	1.00

Resistance Factors

Sliding	0.9
Bearing	0.45
Moment	0.9
Shear	0.9

Factored Bearing Resistance 14.1

Note: Downward and outward forces are positive

LL Surcharge 3 ft

		Dir	Factor	Force		Arm ft		Str-1a F kips	Str-1a M k-ft	Str-1b F kips	Str-1b M k-ft	Str IV F kips	Str IV M k-ft	Str IV F kips	Str IV M k-ft
Structure Reaction		V	DC	3.49	x	2.00	=	4.36	8.73	3.14	6.28	5.24	10.47	3.49	6.98
		V	DW	0.57	x	2.00	=	0.86	1.71	0.37	0.74	0.86	1.71	0.57	1.14
		V	EH	0	x	2.00	=	0.00	0.00	0.00	0.00	0.00	0.00	0.00	0.00
		V	EV	7.53	x	2.00	=	10.17	20.33	7.53	15.1	10.17	20.33	7.53	15.06
		V	LL	3.91	x	2.00	=	6.84	13.69	6.84	13.69	0.00	0.00	3.91	7.82
		H	DC	1.14	x	1.92	=	1.43	2.73	1.03	1.97	1.71	3.28	1.14	2.19
		H	DW	0.18	x	1.92	=	0.27	0.52	0.12	0.22	0.27	0.52	0.18	0.35
		H	EH	-0.29	x	1.92	=	-0.44	-0.83	-0.44	-0.83	-0.44	-0.83	-0.29	-0.56
		H	EV	1.85	x	1.92	=	2.50	4.79	1.85	3.55	2.50	4.79	1.85	3.55
		H	LL	2.19	x	1.92	=	3.83	7.35	3.83	7.35	0.00	0.00	2.19	4.20
		H	LS	0	x	1.92	=	0.00	0.00	0.00	0.00	0.00	0.00	0.00	0.00
Soil Above Heel		V	EV	6.411	x	4.25	=	8.65	36.78	6.41	27.25	8.65	36.78	6.41	27.25
Soil Above Stem		V	EV	0.00	x	2.50	=	0.00	0.00	0.00	0.00	0.00	0.00	0.00	0.00
EH from Soil Above		H	EH	-0.99	x	0.96	=	-1.49	-1.43	-1.49	-1.43	-1.49	-1.43	-0.99	-0.95
EH on Stem FTG		H	EH	-0.07	x	0.64	=	-0.11	-0.07	-0.11	-0.07	-0.11	-0.07	-0.07	-0.05
Stem Weight		V	DC	0	x	2.00	=	0.00	0.00	0.00	0.00	0.00	0.00	0.00	0.00
Ftg Weight		V	DC	1.725	x	3.00	=	2.16	6.47	1.55	4.66	2.59	7.76	1.73	5.18
LS on Stem FTG		H	LS	-0.23	x	0.96	=	-0.40	-0.38	-0.40	-0.38	0.00	0.00	-0.23	-0.22
Totals									100.37		78.04		83.31		71.92

	Str-1a	Str-1b	Str IV	Str IV
Total Vertical	33.04	25.85	27.50	23.64
Net Horizontal	5.59	4.39	2.44	3.78
Resultant Loacation	3.04 ft	3.02 ft	3.03 ft	3.04 ft
Eccentricity	-0.04 ft	-0.02 ft	-0.03 ft	-0.04 ft
bf'	5.92 ft	5.96 ft	5.94 ft	5.91 ft
Bearing Pressure	5.58 ksf	4.34 ksf	4.63 ksf	4.00 ksf
Eccentricity within middle half	YES	YES	YES	YES
Sliding Resistance	16.04 kips	12.55 kips	13.35 kips	11.48

DELTA
ENGINEERS, ARCHITECTS, & LAND SURVEYORS
860 Hooper Road, Endwell, NY 13760
www.deltaengineers.com
Phone: (607) 231-6600
Fax: (607) 231-6650

JOB	2014.059.004		186
DESCIPTION	28'x10' Arch Footing 1 - Min. Live Load		
SHEET NO	OF	SCALE	
CALCULATED BY	YL	DATE	3/20/2014
CHECKED BY	SLV	DATE	3/21/14

Final Condition without Live Load Effects - Sum Forces and Moments About "Toe"

Toe Width	1.5	ft	Backfill Soil (phi)	34	deg
Wall Width	12	in			
Stem Width	1	ft			
Heel Width	3.5	ft			
Footing Width	6	ft			
Stem Height	0	ft			
Footing Thickness	1.917	ft			
Fill Height	2	ft			
Structure Height	11.08	ft			

Soil Weight 140 pcf

Ka = 0.283

Limit States

Factor	Str-1a	Str-1b	Str IV	Serv
DC	1.25	0.90	1.50	1.00
DW	1.50	0.65	1.50	1.00
EH	1.50	1.50	1.50	1.00
EV	1.35	1.00	1.35	1.00
LL	1.75	1.75	0.00	1.00
LS	1.75	1.75	0.00	1.00

Resistance Factors

Sliding	0.9
Bearing	0.45
Moment	0.9
Shear	0.9

Factored Bearing Resistance 14.1

LL Surcharge 3 ft

Note: Downward and outward forces are positive

		Dir	Factor	Force		Arm ft		Str-1a F kips	Str-1a M k-ft	Str-1b F kips	Str-1b M k-ft	Str IV F kips	Str IV M k-ft	Str IV F kips	Str IV M k-ft
Structure Reaction		V	DC	3.49	x	2.00	=	4.36	8.73	3.14	6.28	5.24	10.47	3.49	6.98
		V	DW	0.57	x	2.00	=	0.86	1.71	0.37	0.74	0.86	1.71	0.57	1.14
		V	EH	0	x	2.00	=	0.00	0.00	0.00	0.00	0.00	0.00	0.00	0.00
		V	EV	7.53	x	2.00	=	10.17	20.33	7.53	15.1	10.17	20.33	7.53	15.06
		V	LL	0	x	2.00	=	0.00	0.00	0.00	0.00	0.00	0.00	0.00	0.00
		H	DC	1.14	x	1.92	=	1.43	2.73	1.03	1.97	1.71	3.28	1.14	2.19
		H	DW	0.18	x	1.92	=	0.27	0.52	0.12	0.22	0.27	0.52	0.18	0.35
		H	EH	-0.29	x	1.92	=	-0.44	-0.83	-0.44	-0.83	-0.44	-0.83	-0.29	-0.56
		H	EV	1.85	x	1.92	=	2.50	4.79	1.85	3.55	2.50	4.79	1.85	3.55
		H	LL	0	x	1.92	=	0.00	0.00	0.00	0.00	0.00	0.00	0.00	0.00
		H	LS	0	x	1.92	=	0.00	0.00	0.00	0.00	0.00	0.00	0.00	0.00
Soil Above Heel		V	EV	6.411	x	4.25	=	8.65	36.78	6.41	27.25	8.65	36.78	6.41	27.25
Soil Above Stem		V	EV	0.00	x	2.50	=	0.00	0.00	0.00	0.00	0.00	0.00	0.00	0.00
EH from Soil Above		H	EH	-0.99	x	0.96	=	-1.49	-1.43	-1.49	-1.43	-1.49	-1.43	-0.99	-0.95
EH on Stem FTG		H	EH	-0.07	x	0.64	=	-0.11	-0.07	-0.11	-0.07	-0.11	-0.07	-0.07	-0.05
Stem Weight		V	DC	0	x	2.00	=	0.00	0.00	0.00	0.00	0.00	0.00	0.00	0.00
Ftg Weight		V	DC	1.725	x	3.00	=	2.16	6.47	1.55	4.66	2.59	7.76	1.73	5.18
LS on Stem FTG		H	LS	-0.23	x	0.96	=	-0.40	-0.38	-0.40	-0.38	0.00	0.00	-0.23	-0.22
Totals									79.34		57.01		83.31		59.91

	Str-1a	Str-1b	Str IV	Str IV
Total Vertical	26.19	19.00	27.50	19.73
Net Horizontal	1.76	0.56	2.44	1.59
Resultant Loacation	3.03 ft	3.00 ft	3.03 ft	3.04 ft
Eccentricity	0.03 ft	0.00 ft	0.03 ft	0.04 ft
bf'	5.94 ft	6.00 ft	5.94 ft	5.93 ft
Bearing Pressure	4.41 ksf	3.17 ksf	4.63 ksf	3.33 ksf
Eccentricity within middle half	YES	YES	YES	YES
Sliding Resistance	12.72 kips	9.23 kips	13.35 kips	9.58

DELTA
ENGINEERS, ARCHITECTS, & LAND SURVEYORS
860 Hooper Road, Endwell, NY 13760
www.deltaengineers.com
Phone: (607) 231-6600
Fax: (607) 231-6650

JOB	2014.059.004
DESCIPTION	28'x10' Arch Footing 1 - Min. Live Load
SHEET NO	OF
SCALE	
CALCULATED BY	YL
DATE	3/21/2014
CHECKED BY	SLW
DATE	3/24/14

Stem and Footing Design Forces - Stablilty about Toe

Footing Width	6 ft
Toe width	1.5 ft
Heel Width	3.5 ft
Footing Thickness	1.917 ft
Overburden Ht over Heel	13.08 ft

Limit States

Factor	Str-1a	Str-1b	Str-IV	Serv
DC	1.25	0.90	1.50	1.00
DW	1.50	0.65	1.50	1.00
EH	1.50	1.50	1.50	1.00
EV	1.35	1.00	1.35	1.00
LL	1.75	1.75	0.00	1.00
LS	1.75	1.75	0.00	1.00

Note: Inward forces are positive, negative moment indicates inside face in tension.

Dir	Factor	Force		Arm ft		Str-1a F kips	Str-1a M k-ft	Str-1b F kips	Str-1b M k-ft	Str-IV F kips	Str-IV M k-ft	Service F kips	Service M k-ft
H	DC	-1.14	x	0	=	-1.43	0.00	-1.03	0.00	-1.71	0	-1.14	0
H	DW	-0.18	x	0	=	-0.27	0.00	-0.12	0.00	-0.27	0	-0.18	0
H	EH	0.29	x	0	=	0.44	0.00	0.44	0.00	0.44	0	0.29	0
H	EV	-1.85	x	0	=	-2.50	0.00	-1.85	0.00	-2.50	0	-1.85	0
H	LL	-2.19	x	0	=	-3.83	0.00	-3.83	0.00	0.00	0	-2.19	0
H	LS	0	x	0	=	0.00	0.00	0.00	0.00	0.00	0	0.00	0
H	EH	0	x	0	=	0.00	0.00	0.00	0.00	0.00	0	0.00	0
H	EH	0	x	0	=	0.00	0.00	0.00	0.00	0.00	0	0.00	0
H	LS	0	x	0	=	0.00	0.00	0.00	0.00	0.00	0	0.00	0
Totals						-7.59	0.00	-6.39	0.00	-4.04	0.00	-5.07	0.00

Stem Design Forces: **Mu = 0.00 k-ft** **Ma = 0.00 k-ft** **Vu = -7.59 k**

	Str-1a	Str-1b	Str-IV	Service
FTG. B =	6 ft	6 ft	6 ft	6 ft
B/6 =	1 ft	1 ft	1 ft	1 ft
e =	-0.038 ft	-0.019 ft	-0.030 ft	-0.043 ft
Total Vertical =	33.04 k	25.85 k	27.50 k	23.64 k
Pressure @ P1 (Toe)	5.30 psf	4.22 psf	4.45 psf	3.77 psf
Pressure @ P2 (Heel)	5.72 psf	4.39 psf	4.72 psf	4.11 psf
Pressure @ FF Stem (Toe)	5.40 psf	4.27 psf	4.52 psf	3.85 psf
Pressure @ RF Stem (Heel)	5.47 psf	4.29 psf	4.56 psf	3.91 psf
Upward Bending Moment (Heel)	34.51 k-ft	26.70 k-ft	28.58 k-ft	24.76 k-ft
Upward Shear (Heel)	19.58 k	15.20 k	16.24 k	14.03 k
Downward Overburden Moment (Heel)	-15.15 k-ft	-11.22 k-ft	-15.15 k-ft	-11.22 k-ft
Downward Overburden Shear (Heel)	-8.65 k	-6.41 k	-8.65 k	-6.41 k
Downward Heel Weight Moment (Heel)	-2.20 k-ft	-1.59 k-ft	-2.64 k-ft	-1.76 k-ft
Downward Heel Weight Shear (Heel)	-1.26 k	-0.91 k	-1.51 k	-1.01 k
Net Upward Bending Moment (Heel)	17.17 k-ft	13.89 k-ft	10.79 k-ft	11.78 k-ft
Net Upward Shear (Heel)	9.67 k	7.88 k	6.07 k	6.62 k
Upward Bending Moment (Toe)	5.997 k-ft	4.768 k-ft	5.028 k-ft	4.273 k-ft
Upward Shear (Toe)	8.02 k	6.37 k	6.72 k	5.72 k

Footing Design Forces: **Upward Mu = 17.17 k-ft** **Upward Ma = 11.78 k-ft** **Up. Shear Vu = 9.67 k**

DELTA
ENGINEERS, ARCHITECTS, & LAND SURVEYORS
860 Hooper Road, Endwell, NY 13760
www.deltaengineers.com
Phone: (607) 231-6600
Fax: (607) 231-6650

JOB	2014.059.004		188
DESCIPTION	28'x10' Arch Footing 1 - Min. Live Load		
SHEET NO	OF	SCALE	
CALCULATED BY	YL	DATE	3/20/2014
CHECKED BY	SLJ	DATE	3/21/14

Stem and Footing Design Forces - Stablilty about Toe - structure without live load reaction

Footing Width	6 ft
Toe width	1.5 ft
Heel Width	3.5 ft
Footing Thickness	1.917 ft
Overburden Ht over Heel	13.08 ft

Limit States

Factor	Str-1a	Str-1b	Str-IV	Serv
DC	1.25	0.90	1.50	1.00
DW	1.50	0.65	1.50	1.00
EH	1.50	1.50	1.50	1.00
EV	1.35	1.00	1.35	1.00
LL	1.75	1.75	0.00	1.00
LS	1.75	1.75	0.00	1.00

Note: Inward forces are positive, negative moment indicates inside face in tension.

Dir	Factor	Force		Arm ft		Str-1a F kips	Str-1a M k-ft	Str-1b F kips	Str-1b M k-ft	Str-IV F kips	Str-IV M k-ft	Service F kips	Service M k-ft
H	DC	-1.14	x	0	=	-1.43	0.00	-1.03	0.00	-1.71	0	-1.14	0
H	DW	-0.18	x	0	=	-0.27	0.00	-0.12	0.00	-0.27	0	-0.18	0
H	EH	0.29	x	0	=	0.44	0.00	0.44	0.00	0.44	0	0.29	0
H	EV	-1.85	x	0	=	-2.50	0.00	-1.85	0.00	-2.50	0	-1.85	0
H	LL	0	x	0	=	0.00	0.00	0.00	0.00	0.00	0	0.00	0
H	LS	0	x	0	=	0.00	0.00	0.00	0.00	0.00	0	0.00	0
H	EH	0	x	0	=	0.00	0.00	0.00	0.00	0.00	0	0.00	0
H	EH	0	x	0	=	0.00	0.00	0.00	0.00	0.00	0	0.00	0
H	LS	0	x	0	=	0.00	0.00	0.00	0.00	0.00	0	0.00	0
Totals						-3.76	0.00	-2.56	0.00	-4.04	0.00	-2.88	0.00

Stem Design Forces: **Mu = 0.00 k-ft** **Ma = 0.00 k-ft** **Vu = -4.04 k**

FTG.	Str-1a	Str-1b	Str-IV	Service
B =	6 ft	6 ft	6 ft	6 ft
B/6 =	1 ft	1 ft	1 ft	1 ft
e =	0.029 ft	0.000 ft	0.030 ft	0.037 ft
Total Vertical =	26.19 k	19.00 k	27.50 k	19.73 k
Pressure @ P1 (Toe)	4.49 psf	3.17 psf	4.72 psf	3.41 psf
Pressure @ P2 (Heel)	4.24 psf	3.17 psf	4.45 psf	3.17 psf
Pressure @ FF Stem (Toe)	4.43 psf	3.17 psf	4.65 psf	3.35 psf
Pressure @ RF Stem (Heel)	4.39 psf	3.17 psf	4.61 psf	3.31 psf
Upward Bending Moment (Heel)	26.27 k-ft	19.40 k-ft	27.56 k-ft	19.68 k-ft
Upward Shear (Heel)	15.10 k	11.09 k	15.84 k	11.33 k
Downward Overburden Moment (Heel)	-15.15 k-ft	-11.22 k-ft	-15.15 k-ft	-11.22 k-ft
Downward Overburden Shear (Heel)	-8.65 k	-6.41 k	-8.65 k	-6.41 k
Downward Heel Weight Moment (Heel	-2.20 k-ft	-1.59 k-ft	-2.64 k-ft	-1.76 k-ft
Downward Heel Weight Shear (Heel)	-1.26 k	-0.91 k	-1.51 k	-1.01 k
Net Upward Bending Moment (Heel)	8.92 k-ft	6.60 k-ft	9.78 k-ft	6.70 k-ft
Net Upward Shear (Heel)	5.18 k	3.77 k	5.68 k	3.91 k
Upward Bending Moment (Toe)	5.03 k-ft	3.564 k-ft	5.283 k-ft	3.812 k-ft
Upward Shear (Toe)	6.69 k	4.75 k	7.03 k	5.07 k

Footing Design Forces: **Upward Mu = 9.78 k-ft** **Upward Ma = 6.70 k-ft** **Up. Shear Vu = 7.03 k**

DELTA
ENGINEERS, ARCHITECTS, & LAND SURVEYORS
860 Hooper Road, Endwell, NY 13760
www.deltaengineers.com
Phone: (607) 231-6600
Fax: (607) 231-6650

JOB	2014.059.004		
DESCIPTION	28'x10' Arch Footing 1 - Min. Live Load		
SHEET NO	OF	SCALE	
CALCULATED BY	YL	DATE	5/20/2014
CHECKED BY	RA	DATE	5-20-14

Footing Bottom Reinforcing design

Limit State: Strength

MATERIAL PROPERTIES:

1 Concrete Strength, F'c	5	ksi	Member Design Width b =	12.00	in
2 Reinforcing Steel Yield, Fy	60	ksi	Member Thickness Ts =	20.00	in (3" Keyway)
3 Concrete Unit Weight	150	pcf	Bar Cover =	3.00	in
4 Soil Unit Weight	140	pcf	Bar Size =	5	
			de=Ts-Cov-Bar Size/2 =	16.69	in

Ec = 57000 * √f'c = 4031 ksi

Es = 29000 ksi

n = Es / Ec = 7.20

0.65 < β1 < 0.85 = 0.80

$$\rho_b = \frac{0.85\beta_1 \bullet f'c}{f_y} \bullet \left[\frac{87{,}000}{87{,}000 + f_y}\right] = 0.0335$$

fr = .37 * √f'c = 0.83 ksi

Unfactored Moment, Ma =	11.92	kip-ft
Design Ultimate Moment, Mu =	17.99	kip-ft
Ultimate Shear, Vu =	9.99	kips

Capacity Reduction Factors

Moment, ΦM = 0.9

Shear, ΦV = 0.9

dv = Greater of .72h or 0.9 de = 15.02 in

β = 2.0

Vc=ϕ(0.0316)β√f'c*b*dv= 22.92 kips/ft **> Vu OK**

$$\rho = \left[1 - \left(\sqrt{1 - \frac{2 \bullet M_u}{\phi b d^2 \bullet .85 f'c}}\right)\right] \bullet \frac{.85 f'c}{f_y} = 0.00121$$

Steel Area Req'd; As =ρ * b * d = 0.242 in^2/ft

Use #5 Bar @ 7.00 in oc

As Prov = 0.53 in^2/ft

ρ Prov = 0.00263 **OK**

Check Min As > 1.33 AsReq **OK**

φMn = φAsfy(de-a/2)/12 = 38.76 kip-ft **OK**

c=As*Fy/.85*f'c*β1*b = 0.773 in

c/de ≤ 0.42; c/de = 0.046 OK

a = β_1c = 0.619 in

Ig = $bt^3/12$ = 8000 in^4

y_t = T/2 = 10.00 in

Mcr = fr*(Ig / yt) = 55.16 kip-ft

1.2Mcr= 66.19 kip-ft

CHECK CRACKING

$$k = \sqrt{2\rho n + \rho n^2} - \rho n = 0.176$$

j = 1 - (k/3) = 0.941

fs = Ma/(As*j*d) = 17.31 ksi

max spa ≤ [(700γe) / (βsfs)] - 2dc = 26 in

dc= 2.31 in

Bs=1+dc/(0.7*(h-dc))= 1.187

γe= 0.75

DELTA
ENGINEERS, ARCHITECTS, & LAND SURVEYORS
860 Hooper Road, Endwell, NY 13760
www.deltaengineers.com
Phone: (607) 231-6600
Fax: (607) 231-6650

JOB	2014.059.004	190	
DESCIPTION	28'x10' Arch Footing 1 - Max. Live Load		
SHEET NO	OF	SCALE	
CALCULATED BY	YL	DATE	3/20/2014
CHECKED BY	SLJ	DATE	3/21/14

Structure Geometry

Toe Width	1.5	ft	Stem Height	0	ft	Backfill Soil (phi)	34 deg
Wall Width	12	in	Footing Thickness	1.917	ft	Soil Weight	140 pcf
Stem Width	1	ft	Fill Height	2	ft	Ka =	0.2827
Heel Width	3.5	ft	Structure Height	11.08	ft	LL Surcharge	3 ft
Footing Width	6	ft				Allowable Factored Brg Res.	14.1ksf

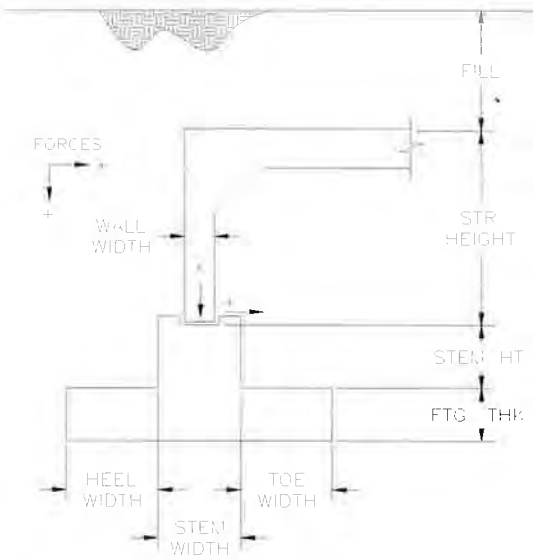

(Note: A Stem Ht. of Zero indicates a strip footing, not a pedestal footing as shown)

Pedestal Footing

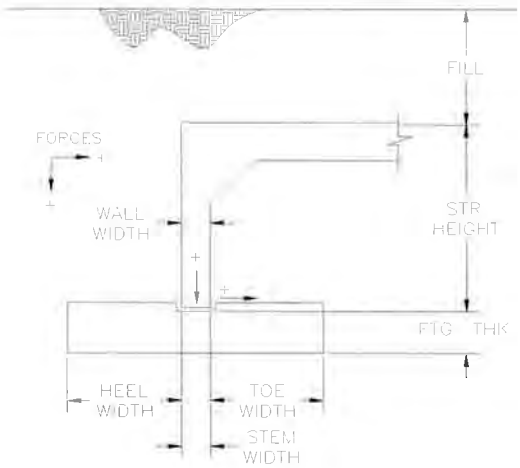

(Note: Ensure Stem Width equals Wall Width and Stem Ht. equals Zero when designing a strip footing)

Strip Footing

DELTA
ENGINEERS, ARCHITECTS, & LAND SURVEYORS
860 Hooper Road, Endwell, NY 13760
www.deltaengineers.com
Phone: (607) 231-6600
Fax: (607) 231-6650

JOB	2014.059.004		191
DESCIPTION	28'x10' Arch Footing 1 - Max. Live Load		
SHEET NO	OF	SCALE	
CALCULATED BY	YL	DATE	3/20/2014
CHECKED BY	SLV	DATE	3/21/14

Final Condition with Live Load Effects - Sum Forces and Moments About "Heel"

Toe Width	1.5	ft	Backfill Soil (phi)	34	deg
Wall Width	12	in			
Stem Width	1	ft			
Heel Width	3.5	ft			
Footing Width	6	ft			
Stem Height	0	ft			
Footing Thickness	1.917	ft			
Fill Height	2	ft			
Structure Height	11.08	ft			

Soil Weight 140 pcf

Ka = 0.283

Limit States

Factor	Str-1a	Str-1b	Str IV	Serv
DC	1.25	0.90	1.50	1.00
DW	1.50	0.65	1.50	1.00
EH	0.90	0.90	0.90	1.00
EV	1.35	1.00	1.35	1.00
LL	1.75	1.75	0.00	1.00
LS	0.00	0.00	0.00	1.00

Resistance Factors

Sliding	0.9
Bearing	0.45
Moment	0.9
Shear	0.9

Factored Bearing Resistance 14.1ksf

Note: Downward and inward forces are positive

		Dir	Factor	Force		Arm ft		Str-1a F kips	Str-1a M k-ft	Str-1b F kips	Str-1b M k-ft	Str IV F kips	Str IV M k-ft	Str IV F kips	Str IV M k-ft
Structure Reaction		V	DC	3.49	x	4.00	=	4.36	17.45	3.14	12.56	5.24	20.94	3.49	13.96
		V	DW	0.57	x	4.00	=	0.86	3.42	0.37	1.48	0.86	3.42	0.57	2.28
		V	EH	0	x	4.00	=	0.00	0.00	0.00	0.00	0.00	0.00	0.00	0.00
		V	EV	7.53	x	4.00	=	10.17	40.66	7.53	30.1	10.17	40.66	7.53	30.12
		V	LL	10.87	x	4.00	=	19.02	76.09	19.02	76.09	0.00	0.00	10.87	43.48
		H	DC	-1.14	x	1.92	=	-1.43	-2.73	-1.03	-1.97	-1.71	-3.28	-1.14	-2.19
		H	DW	-0.18	x	1.92	=	-0.27	-0.52	-0.12	-0.22	-0.27	-0.52	-0.18	-0.35
		H	EH	0.29	x	1.92	=	0.26	0.50	0.26	0.50	0.26	0.50	0.29	0.56
		H	EV	-1.85	x	1.92	=	-2.50	-4.79	-1.85	-3.55	-2.50	-4.79	-1.85	-3.55
		H	LL	-4.7	x	1.92	=	-8.23	-15.77	-8.23	-15.77	0.00	0.00	-4.70	-9.01
		H	LS	0	x	1.92	=	0.00	0.00	0.00	0.00	0.00	0.00	0.00	0.00
Soil Above Heel		V	EV	6.411	x	1.75	=	8.65	15.15	6.41	11.22	8.65	15.15	6.41	11.22
Soil Above Stem		V	EV	0.00	x	3.50	=	0.00	0.00	0.00	0.00	0.00	0.00	0.00	0.00
EH from Soil Above		H	EH	0.993	x	0.96	=	0.89	0.86	0.89	0.86	0.89	0.86	0.99	0.95
EH on Stem FTG		H	EH	0.073	x	0.64	=	0.07	0.04	0.07	0.04	0.07	0.04	0.07	0.05
Stem Weight		V	DC	0	x	4.00	=	0.00	0.00	0.00	0.00	0.00	0.00	0.00	0.00
Ftg Weight		V	DC	1.725	x	3.00	=	2.16	6.47	1.55	4.66	2.59	7.76	1.73	5.18
Totals									136.83		116.03		80.75		92.70

	Str-1a	Str-1b	Str IV	Str IV
Total Vertical	45.22	38.03	27.50	30.60
Net Horizontal	-11.20	-10.00	-3.26	-6.51
Resultant Loacation	3.03 ft	3.05 ft	2.94 ft	3.03 ft
Eccentricity	-0.03 ft	-0.05 ft	0.06 ft	-0.03 ft
bf'	5.95 ft	5.90 ft	5.87 ft	5.94 ft
Bearing Pressure	7.60 ksf	6.45 ksf	4.68 ksf	5.15 ksf
Eccentricity within middle half	YES	YES	YES	YES
Sliding Resistance	21.96 kips	18.47 kips	13.35 kips	14.86

DELTA
ENGINEERS, ARCHITECTS, & LAND SURVEYORS
860 Hooper Road, Endwell, NY 13760
www.deltaengineers.com
Phone: (607) 231-6600
Fax: (607) 231-6650

JOB	2014.059.004		192
DESCIPTION	28'x10' Arch Footing 1 - Max. Live Load		
SHEET NO	OF	SCALE	
CALCULATED BY	YL	DATE	3/20/2014
CHECKED BY	SLV	DATE	3/21/14

Final Condition without Live Load Effects - Sum Forces and Moments About "Heel"

Toe Width	1.5	ft
Wall Width	12	in
Stem Width	1	ft
Heel Width	3.5	ft
Footing Width	6	ft
Stem Height	0	ft
Footing Thickness	1.917	ft
Fill Height	2	ft
Structure Height	11.08	ft

Backfill Soil (phi) 34 deg

Soil Weight 140 pcf

Ka = 0.283

Limit States

Factor	Str-1a	Str-1b	Str IV	Serv
DC	1.25	0.90	1.50	1.00
DW	1.50	0.65	1.50	1.00
EH	0.90	0.90	0.90	1.00
EV	1.35	1.00	1.35	1.00
LL	1.75	1.75	0.00	1.00
LS	0.00	0.00	0.00	1.00

Resistance Factors

Sliding	0.9
Bearing	0.45
Moment	0.9
Shear	0.9

Factored Bearing Resistance 14.1ksf

Note: Downward and inward forces are positive

		Dir	Factor	Force		Arm ft		Str-1a F kips	Str-1a M k-ft	Str-1b F kips	Str-1b M k-ft	Str IV F kips	Str IV M k-ft	Str IV F kips	Str IV M k-ft
Structure Reaction		V	DC	3.49	x	4.00	=	4.36	17.45	3.14	12.56	5.24	20.94	3.49	13.96
		V	DW	0.57	x	4.00	=	0.86	3.42	0.37	1.48	0.86	3.42	0.57	2.28
		V	EH	0	x	4.00	=	0.00	0.00	0.00	0.00	0.00	0.00	0.00	0.00
		V	EV	7.53	x	4.00	=	10.17	40.66	7.53	30.1	10.17	40.66	7.53	30.12
		V	LL	0	x	4.00	=	0.00	0.00	0.00	0.00	0.00	0.00	0.00	0.00
		H	DC	-1.14	x	1.92	=	-1.43	-2.73	-1.03	-1.97	-1.71	-3.28	-1.14	-2.19
		H	DW	-0.18	x	1.92	=	-0.27	-0.52	-0.12	-0.22	-0.27	-0.52	-0.18	-0.35
		H	EH	0.29	x	1.92	=	0.26	0.50	0.26	0.50	0.26	0.50	0.29	0.56
		H	EV	-1.85	x	1.92	=	-2.50	-4.79	-1.85	-3.55	-2.50	-4.79	-1.85	-3.55
		H	LL	0	x	1.92	=	0.00	0.00	0.00	0.00	0.00	0.00	0.00	0.00
		H	LS	0	x	1.92	=	0.00	0.00	0.00	0.00	0.00	0.00	0.00	0.00
Soil Above Heel		V	EV	6.411	x	1.75	=	8.65	15.15	6.41	11.22	8.65	15.15	6.41	11.22
Soil Above Stem		V	EV	0.00	x	3.50	=	0.00	0.00	0.00	0.00	0.00	0.00	0.00	0.00
EH from Soil Above		H	EH	0.993	x	0.96	=	0.89	0.86	0.89	0.86	0.89	0.86	0.99	0.95
EH on Stem FTG		H	EH	0.073	x	0.64	=	0.07	0.04	0.07	0.04	0.07	0.04	0.07	0.05
Stem Weight		V	DC	0	x	4.00	=	0.00	0.00	0.00	0.00	0.00	0.00	0.00	0.00
Ftg Weight		V	DC	1.725	x	3.00	=	2.16	6.47	1.55	4.66	2.59	7.76	1.73	5.18
Totals									76.51		55.70		80.75		58.23
Total Vertical								26.19		19.00		27.50		19.73	
Net Horizontal								-2.97		-1.77		-3.26		-1.81	
Resultant Loacation								2.92 ft		2.93 ft		2.94 ft		2.95 ft	
Eccentricity								0.08 ft		0.07 ft		0.06 ft		0.05 ft	
bf'								5.84 ft		5.86 ft		5.87 ft		5.90 ft	
Bearing Pressure								4.48 ksf		3.24 ksf		4.68 ksf		3.34 ksf	
Eccentricity within middle half								YES		YES		YES		YES	
Sliding Resistance								12.72 kips		9.23 kips		13.35 kips		9.58	

DELTA
ENGINEERS, ARCHITECTS, & LAND SURVEYORS
860 Hooper Road, Endwell, NY 13760
www.deltaengineers.com
Phone: (607) 231-6600
Fax: (607) 231-6650

JOB	2014.059.004		193
DESCIPTION	28'x10' Arch Footing 1 - Max. Live Load		
SHEET NO	OF	SCALE	
CALCULATED BY	YL	DATE	3/20/2014
CHECKED BY	SLV	DATE	3/21/14

Stem and Footing Design Forces - Stablilty about Heel

Footing Width	6	ft
Toe width	1.5	ft
Heel Width	3.5	ft
Footing Thickness	1.917	ft
Overburden Ht over Heel	13.08	ft

Limit States

Factor	Str-1a	Str-1b	Str-IV	Serv
DC	1.25	0.90	1.50	1.00
DW	1.50	0.65	1.50	1.00
EH	0.90	0.90	0.90	1.00
EV	1.35	1.00	1.35	1.00
LL	1.75	1.75	0.00	1.00
LS	0.00	0.00	0.00	1.00

Note: Inward forces are positive, negative moment indicates inside face in tension.

						Str-1a		Str-1b		Str-IV		Service	
Dir	Factor	Force		Arm ft		F kips	M k-ft	F kips	M k-ft	F kips	M k-ft	F kips	M k-ft
H	DC	-1.14	x	0	=	-1.43	0.00	-1.03	0.00	-1.71	0	-1.14	0
H	DW	-0.18	x	0	=	-0.27	0.00	-0.12	0.00	-0.27	0	-0.18	0
H	EH	0.29	x	0	=	0.26	0.00	0.26	0.00	0.26	0	0.29	0
H	EV	-1.85	x	0	=	-2.50	0.00	-1.85	0.00	-2.50	0	-1.85	0
H	LL	-4.7	x	0	=	-8.23	0.00	-8.23	0.00	0.00	0	-4.70	0
H	LS	0	x	0	=	0.00	0.00	0.00	0.00	0.00	0	0.00	0
H	EH	0	x	0	=	0.00	0.00	0.00	0.00	0.00	0	0.00	0
H	EH	0	x	0	=	0.00	0.00	0.00	0.00	0.00	0	0.00	0
Totals						-12.16	0.00	-10.96	0.00	-4.22	0.00	-7.58	0.00

Stem Design Forces:	**Mu = 0.00 k-ft**	**Ma = 0.00 k-ft**	**Vu = -12.16 k**	
FTG: B =	6 ft	6 ft	6 ft	6 ft
B/6 =	1 ft	1 ft	1 ft	1 ft
e =	-0.026 ft	-0.051 ft	0.064 ft	-0.030 ft
Total Vertical =	45.22 k	38.03 k	27.50 k	30.60 k
Pressure @ P1 (Toe)	7.73 psf	6.66 psf	4.29 psf	5.25 psf
Pressure @ P2 (Heel)	7.34 psf	6.01 psf	4.87 psf	4.95 psf
Pressure @ FF Stem (Toe)	7.63 psf	6.50 psf	4.44 psf	5.18 psf
Pressure @ RF Stem (Heel)	7.57 psf	6.39 psf	4.53 psf	5.12 psf
Upward Bending Moment (Heel)	45.42 k-ft	37.61 k-ft	29.16 k-ft	30.66 k-ft
Upward Shear (Heel)	26.09 k	21.71 k	16.47 k	17.63 k
Downward Overburden Moment (Heel)	-15.15 k-ft	-11.22 k-ft	-15.15 k-ft	-11.22 k-ft
Downward Overburden Shear (Heel)	-8.65 k	-6.41 k	-8.65 k	-6.41 k
Downward Heel Weight Moment (Heel)	-2.20 k-ft	-1.59 k-ft	-2.64 k-ft	-1.76 k-ft
Downward Heel Weight Shear (Heel)	-1.26 k	-0.91 k	-1.51 k	-1.01 k
Net Upward Bending Moment (Heel)	28.07 k-ft	24.80 k-ft	11.37 k-ft	17.68 k-ft
Net Upward Shear (Heel)	16.18 k	14.39 k	6.30 k	10.21 k
Upward Bending Moment (Toe)	8.6627 k-ft	7.4339 k-ft	4.883 k-ft	5.88 k-ft
Upward Shear (Toe)	11.53 k	9.87 k	6.55 k	7.82 k
Footing Design Forces:	**Upward Mu = 28.07 k-ft**	**Upward Ma = 17.68 k-ft**	**Up. Shear Vu = 16.18 k**	

DELTA
ENGINEERS, ARCHITECTS, & LAND SURVEYORS
860 Hooper Road, Endwell, NY 13760
www.deltaengineers.com
Phone: (607) 231-6600
Fax: (607) 231-6650

JOB	2014.059.004		194
DESCIPTION	28'x10' Arch Footing 1 - Max. Live Load		
SHEET NO	OF	SCALE	
CALCULATED BY	YL	DATE	3/20/2014
CHECKED BY	SCU	DATE	3/21/14

Stem and Footing Design Forces - Stablilty about Heel - structure without live load reaction

Footing Width	6 ft
Toe width	1.5 ft
Heel Width	3.5 ft
Footing Thickness	1.917 ft
Overburned Ht over Heel	13.08 ft

Limit States

Factor	Str-1a	Str-1b	Str-IV	Serv
DC	1.25	0.90	1.50	1.00
DW	1.50	0.65	1.50	1.00
EH	0.90	0.90	0.90	1.00
EV	1.35	1.00	1.35	1.00
LL	1.75	1.75	0.00	1.00
LS	0.00	0.00	0.00	1.00

Note: Inward forces are positive, negative moment indicates inside face in tension.

						Str-1a		Str-1b		Str-IV		Service	
Dir	Factor	Force		Arm ft		F kips	M k-ft	F kips	M k-ft	F kips	M k-ft	F kips	M k-ft
H	DC	-1.14	x	0	=	-1.43	0.00	-1.03	0.00	-1.71	0	-1.14	0
H	DW	-0.18	x	0	=	-0.27	0.00	-0.12	0.00	-0.27	0	-0.18	0
H	EH	0.29	x	0	=	0.26	0.00	0.26	0.00	0.26	0	0.29	0
H	EV	-1.85	x	0	=	-2.50	0.00	-1.85	0.00	-2.50	0	-1.85	0
H	LL	0	x	0	=	0.00	0.00	0.00	0.00	0.00	0	0.00	0
H	LS	0	x	0	=	0.00	0.00	0.00	0.00	0.00	0	0.00	0
H	EH	0	x	0	=	0.00	0.00	0.00	0.00	0.00	0	0.00	0
H	EH	0	x	0	=	0.00	0.00	0.00	0.00	0.00	0	0.00	0
Totals						-3.93	0.00	-2.73	0.00	-4.22	0.00	-2.88	0.00

Stem Design Forces: **Mu = 0.00 k-ft** **Ma = 0.00 k-ft** **Vu = -4.22 k**

	Str-1a	Str-1b	Str-IV	Service
FTG. B =	6 ft	6 ft	6 ft	6 ft
B/6 =	1 ft	1 ft	1 ft	1 ft
e =	0.079 ft	0.069 ft	0.064 ft	0.048 ft
Total Vertical =	26.19 k	19.00 k	27.50 k	19.73 k
Pressure @ P1 (Toe)	4.02 psf	2.95 psf	4.29 psf	3.13 psf
Pressure @ P2 (Heel)	4.71 psf	3.39 psf	4.87 psf	3.45 psf
Pressure @ FF Stem (Toe)	4.19 psf	3.06 psf	4.44 psf	3.21 psf
Pressure @ RF Stem (Heel)	4.31 psf	3.13 psf	4.53 psf	3.26 psf
Upward Bending Moment (Heel)	28.03 k-ft	20.22 k-ft	29.16 k-ft	20.73 k-ft
Upward Shear (Heel)	15.78 k	11.40 k	16.47 k	11.74 k
Downward Overburden Moment (Heel	-15.15 k-ft	-11.22 k-ft	-15.15 k-ft	-11.22 k-ft
Downward Overburden Shear (Heel)	-8.65 k	-6.41 k	-8.65 k	-6.41 k
Downward Heel Weight Moment (Hee	-2.20 k-ft	-1.59 k-ft	-2.64 k-ft	-1.76 k-ft
Downward Heel Weight Shear (Heel)	-1.26 k	-0.91 k	-1.51 k	-1.01 k
Net Upward Bending Moment (Heel)	10.69 k-ft	7.41 k-ft	11.37 k-ft	7.75 k-ft
Net Upward Shear (Heel)	5.87 k	4.09 k	6.30 k	4.32 k
Upward Bending Moment (Toe)	4.587 k-ft	3.3586 k-ft	4.8828 k-ft	3.551 k-ft
Upward Shear (Toe)	6.16 k	4.51 k	6.55 k	4.75 k

Footing Design Forces: **Upward Mu = 11.37 k-ft** **Upward Ma = 7.75 k-ft** **Up. Shear Vu = 6.55 k**

DELTA
ENGINEERS, ARCHITECTS, & LAND SURVEYORS
860 Hooper Road, Endwell, NY 13760
www.deltaengineers.com
Phone: (607) 231-6600
Fax: (607) 231-6650

JOB	2014.059.004		
DESCIPTION	28'x10' Arch Footing 1 - Max. Live Load		
SHEET NO	OF	SCALE	
CALCULATED BY	YL	DATE	3/21/2014
CHECKED BY	SJ	DATE	3/21/14

Final Condition with Live Load Effects - Sum Forces and Moments About "Toe"

Toe Width	1.5 ft	Backfill Soil (phi)	34 deg	Soil Weight	140 pcf	
Wall Width	12 in	Limit States		Ka =	0.28	
Stem Width	1 ft			Resistance Factors		
Heel Width	3.5 ft			Sliding	0.9	
Footing Width	6 ft			Bearing	0.45	
Stem Height	0 ft			Moment	0.9	
Footing Thickness	1.917 ft			Shear	0.9	
Fill Height	2 ft					
Structure Height	11.08 ft			Factored Bearing Resistance	14.1	
				LL Surcharge	3 ft	

Factor	Str-1a	Str-1b	Str IV	Serv
DC	1.25	0.90	1.50	1.00
DW	1.50	0.65	1.50	1.00
EH	1.50	1.50	1.50	1.00
EV	1.35	1.00	1.35	1.00
LL	1.75	1.75	0.00	1.00
LS	1.75	1.75	0.00	1.00

Note: Downward and outward forces are positive

								Str-1a		Str-1b		Str IV		Str IV	
		Dir	Factor	Force		Arm ft		F kips	M k-ft	F kips	M k-ft	F kips	M k-ft	F kips	M k-ft
Structure Reaction		V	DC	3.49	x	2.00	=	4.36	8.73	3.14	6.28	5.24	10.47	3.49	6.98
		V	DW	0.57	x	2.00	=	0.86	1.71	0.37	0.74	0.86	1.71	0.57	1.14
		V	EH	0	x	2.00	=	0.00	0.00	0.00	0.00	0.00	0.00	0.00	0.00
		V	EV	7.53	x	2.00	=	10.17	20.33	7.53	15.1	10.17	20.33	7.53	15.06
		V	LL	10.87	x	2.00	=	19.02	38.05	19.02	38.05	0.00	0.00	10.87	21.74
		H	DC	1.14	x	1.92	=	1.43	2.73	1.03	1.97	1.71	3.28	1.14	2.19
		H	DW	0.18	x	1.92	=	0.27	0.52	0.12	0.22	0.27	0.52	0.18	0.35
		H	EH	-0.29	x	1.92	=	-0.44	-0.83	-0.44	-0.83	-0.44	-0.83	-0.29	-0.56
		H	EV	1.85	x	1.92	=	2.50	4.79	1.85	3.55	2.50	4.79	1.85	3.55
		H	LL	4.7	x	1.92	=	8.23	15.77	8.23	15.77	0.00	0.00	4.70	9.01
		H	LS	0	x	1.92	=	0.00	0.00	0.00	0.00	0.00	0.00	0.00	0.00
Soil Above Heel		V	EV	6.411	x	4.25	=	8.65	36.78	6.41	27.25	8.65	36.78	6.41	27.25
Soil Above Stem		V	EV	0.00	x	2.50	=	0.00	0.00	0.00	0.00	0.00	0.00	0.00	0.00
EH from Soil Above		H	EH	-0.99	x	0.96	=	-1.49	-1.43	-1.49	-1.43	-1.49	-1.43	-0.99	-0.95
EH on Stem FTG		H	EH	-0.07	x	0.64	=	-0.11	-0.07	-0.11	-0.07	-0.11	-0.07	-0.07	-0.05
Stem Weight		V	DC	0	x	2.00	=	0.00	0.00	0.00	0.00	0.00	0.00	0.00	0.00
Ftg Weight		V	DC	1.725	x	3.00	=	2.16	6.47	1.55	4.66	2.59	7.76	1.73	5.18
LS on Stem FTG		H	LS	-0.23	x	0.96	=	-0.40	-0.38	-0.40	-0.38	0.00	0.00	-0.23	-0.22
Totals									133.15		110.82		83.31		90.66

	Str-1a	Str-1b	Str IV	Str IV
Total Vertical	45.22	38.03	27.50	30.60
Net Horizontal	9.99	8.79	2.44	6.29
Resultant Loacation	2.94 ft	2.91 ft	3.03 ft	2.96 ft
Eccentricity	0.06 ft	0.09 ft	-0.03 ft	0.04 ft
bf'	5.89 ft	5.83 ft	5.94 ft	5.93 ft
Bearing Pressure	7.68 ksf	6.52 ksf	4.63 ksf	5.16 ksf
Eccentricity within middle half	YES	YES	YES	YES
Sliding Resistance	21.96 kips	18.47 kips	13.35 kips	14.86

DELTA
ENGINEERS, ARCHITECTS, & LAND SURVEYORS
860 Hooper Road, Endwell, NY 13760
www.deltaengineers.com
Phone: (607) 231-6600
Fax: (607) 231-6650

JOB	2014.059.004		196
DESCIPTION	28'x10' Arch Footing 1 - Max. Live Load		
SHEET NO	OF	SCALE	
CALCULATED BY	YL	DATE	3/20/2014
CHECKED BY	SLV	DATE	3/21/14

Final Condition without Live Load Effects - Sum Forces and Moments About "Toe"

Toe Width	1.5 ft	Backfill Soil (phi)	34 deg	Soil Weight	140 pcf
Wall Width	12 in			Ka =	0.283
Stem Width	1 ft				
Heel Width	3.5 ft				
Footing Width	6 ft				
Stem Height	0 ft				
Footing Thickness	1.917 ft				
Fill Height	2 ft				
Structure Height	11.08 ft				

Limit States

Factor	Str-1a	Str-1b	Str IV	Serv
DC	1.25	0.90	1.50	1.00
DW	1.50	0.65	1.50	1.00
EH	1.50	1.50	1.50	1.00
EV	1.35	1.00	1.35	1.00
LL	1.75	1.75	0.00	1.00
LS	1.75	1.75	0.00	1.00

Resistance Factors

Sliding	0.9
Bearing	0.45
Moment	0.9
Shear	0.9

Factored Bearing Resistance 14.1

LL Surcharge 3 ft

Note: Downward and outward forces are positive

		Dir	Factor	Force		Arm ft		Str-1a F kips	Str-1a M k-ft	Str-1b F kips	Str-1b M k-ft	Str IV F kips	Str IV M k-ft	Str IV F kips	Str IV M k-ft
Structure Reaction		V	DC	3.49	x	2.00	=	4.36	8.73	3.14	6.28	5.24	10.47	3.49	6.98
		V	DW	0.57	x	2.00	=	0.86	1.71	0.37	0.74	0.86	1.71	0.57	1.14
		V	EH	0	x	2.00	=	0.00	0.00	0.00	0.00	0.00	0.00	0.00	0.00
		V	EV	7.53	x	2.00	=	10.17	20.33	7.53	15.1	10.17	20.33	7.53	15.06
		V	LL	0	x	2.00	=	0.00	0.00	0.00	0.00	0.00	0.00	0.00	0.00
		H	DC	1.14	x	1.92	=	1.43	2.73	1.03	1.97	1.71	3.28	1.14	2.19
		H	DW	0.18	x	1.92	=	0.27	0.52	0.12	0.22	0.27	0.52	0.18	0.35
		H	EH	-0.29	x	1.92	=	-0.44	-0.83	-0.44	-0.83	-0.44	-0.83	-0.29	-0.56
		H	EV	1.85	x	1.92	=	2.50	4.79	1.85	3.55	2.50	4.79	1.85	3.55
		H	LL	0	x	1.92	=	0.00	0.00	0.00	0.00	0.00	0.00	0.00	0.00
		H	LS	0	x	1.92	=	0.00	0.00	0.00	0.00	0.00	0.00	0.00	0.00
Soil Above Heel		V	EV	6.411	x	4.25	=	8.65	36.78	6.41	27.25	8.65	36.78	6.41	27.25
Soil Above Stem		V	EV	0.00	x	2.50	=	0.00	0.00	0.00	0.00	0.00	0.00	0.00	0.00
EH from Soil Above		H	EH	-0.99	x	0.96	=	-1.49	-1.43	-1.49	-1.43	-1.49	-1.43	-0.99	-0.95
EH on Stem FTG		H	EH	-0.07	x	0.64	=	-0.11	-0.07	-0.11	-0.07	-0.11	-0.07	-0.07	-0.05
Stem Weight		V	DC	0	x	2.00	=	0.00	0.00	0.00	0.00	0.00	0.00	0.00	0.00
Ftg Weight		V	DC	1.725	x	3.00	=	2.16	6.47	1.55	4.66	2.59	7.76	1.73	5.18
LS on Stem FTG		H	LS	-0.23	x	0.96	=	-0.40	-0.38	-0.40	-0.38	0.00	0.00	-0.23	-0.22
Totals									79.34		57.01		83.31		59.91
Total Vertical								26.19		19.00		27.50		19.73	
Net Horizontal								1.76		0.56		2.44		1.59	
Resultant Loacation								3.03 ft		3.00 ft		3.03 ft		3.04 ft	
Eccentricity								0.03 ft		0.00 ft		0.03 ft		0.04 ft	
bf'								5.94 ft		6.00 ft		5.94 ft		5.93 ft	
Bearing Pressure								4.41 ksf		3.17 ksf		4.63 ksf		3.33 ksf	
Eccentricity within middle half								YES		YES		YES		YES	
Sliding Resistance								12.72 kips		9.23 kips		13.35 kips		9.58	

DELTA
ENGINEERS, ARCHITECTS, & LAND SURVEYORS
860 Hooper Road, Endwell, NY 13760
www.deltaengineers.com
Phone: (607) 231-6600
Fax: (607) 231-6650

JOB	2014.059.004		
DESCIPTION	28'x10' Arch Footing 1 - Max. Live Load		
SHEET NO	OF	SCALE	
CALCULATED BY	YL	DATE	3/21/2014
CHECKED BY	S.J	DATE	3/24/14

Stem and Footing Design Forces - Stablilty about Toe

Footing Width	6	ft
Toe width	1.5	ft
Heel Width	3.5	ft
Footing Thickness	1.917	ft
Overburden Ht over Heel	13.08	ft

Limit States

Factor	Str-1a	Str-1b	Str-IV	Serv
DC	1.25	0.90	1.50	1.00
DW	1.50	0.65	1.50	1.00
EH	1.50	1.50	1.50	1.00
EV	1.35	1.00	1.35	1.00
LL	1.75	1.75	0.00	1.00
LS	1.75	1.75	0.00	1.00

Note: Inward forces are positive, negative moment indicates inside face in tension.

						Str-1a		Str-1b		Str-IV		Service	
Dir	Factor	Force		Arm ft		F kips	M k-ft	F kips	M k-ft	F kips	M k-ft	F kips	M k-ft
H	DC	-1.14	x	0	=	-1.43	0.00	-1.03	0.00	-1.71	0	-1.14	0
H	DW	-0.18	x	0	=	-0.27	0.00	-0.12	0.00	-0.27	0	-0.18	0
H	EH	0.29	x	0	=	0.44	0.00	0.44	0.00	0.44	0	0.29	0
H	EV	-1.85	x	0	=	-2.50	0.00	-1.85	0.00	-2.50	0	-1.85	0
H	LL	-4.7	x	0	=	-8.23	0.00	-8.23	0.00	0.00	0	-4.70	0
H	LS	0	x	0	=	0.00	0.00	0.00	0.00	0.00	0	0.00	0
H	EH	0	x	0	=	0.00	0.00	0.00	0.00	0.00	0	0.00	0
H	EH	0	x	0	=	0.00	0.00	0.00	0.00	0.00	0	0.00	0
H	LS	0	x	0	=	0.00	0.00	0.00	0.00	0.00	0	0.00	0
Totals						-11.98	0.00	-10.78	0.00	-4.04	0.00	-7.58	0.00

Stem Design Forces: **Mu = 0.00 k-ft** **Ma = 0.00 k-ft** **Vu = -11.98 k**

FTG. B =	6 ft	6 ft	6 ft	6 ft
B/6 =	1 ft	1 ft	1 ft	1 ft
e =	0.055 ft	0.086 ft	-0.030 ft	0.037 ft
Total Vertical =	45.22 k	38.03 k	27.50 k	30.60 k
Pressure @ P1 (Toe)	7.95 psf	6.88 psf	4.45 psf	5.29 psf
Pressure @ P2 (Heel)	7.12 psf	5.79 psf	4.72 psf	4.91 psf
Pressure @ FF Stem (Toe)	7.74 psf	6.61 psf	4.52 psf	5.19 psf
Pressure @ RF Stem (Heel)	7.61 psf	6.43 psf	4.56 psf	5.13 psf
Upward Bending Moment (Heel)	44.60 k-ft	36.79 k-ft	28.58 k-ft	30.53 k-ft
Upward Shear (Heel)	25.77 k	21.39 k	16.24 k	17.57 k
Downward Overburden Moment (Heel)	-15.15 k-ft	-11.22 k-ft	-15.15 k-ft	-11.22 k-ft
Downward Overburden Shear (Heel)	-8.65 k	-6.41 k	-8.65 k	-6.41 k
Downward Heel Weight Moment (Heel)	-2.20 k-ft	-1.59 k-ft	-2.64 k-ft	-1.76 k-ft
Downward Heel Weight Shear (Heel)	-1.26 k	-0.91 k	-1.51 k	-1.01 k
Net Upward Bending Moment (Heel)	27.25 k-ft	23.98 k-ft	10.79 k-ft	17.55 k-ft
Net Upward Shear (Heel)	15.86 k	14.07 k	6.07 k	10.16 k
Upward Bending Moment (Toe)	8.868 k-ft	7.639 k-ft	5.028 k-ft	5.914 k-ft
Upward Shear (Toe)	11.77 k	10.12 k	6.72 k	7.86 k

Footing Design Forces: **Upward Mu = 27.25 k-ft** **Upward Ma = 17.55 k-ft** **Up. Shear Vu = 15.86 k**

DELTA
ENGINEERS, ARCHITECTS, & LAND SURVEYORS
860 Hooper Road, Endwell, NY 13760
www.deltaengineers.com
Phone: (607) 231-6600
Fax: (607) 231-6650

JOB	2014.059.004		198
DESCIPTION	28'x10' Arch Footing 1 - Max. Live Load		
SHEET NO	OF	SCALE	
CALCULATED BY	YL	DATE	3/20/2014
CHECKED BY	SLV	DATE	3/21/14

Stem and Footing Design Forces - Stablilty about Toe - structure without live load reaction

Footing Width	6	ft
Toe width	1.5	ft
Heel Width	3.5	ft
Footing Thickness	1.917	ft
Overburden Ht over Heel	13.08	ft

Limit States

Factor	Str-1a	Str-1b	Str-IV	Serv
DC	1.25	0.90	1.50	1.00
DW	1.50	0.65	1.50	1.00
EH	1.50	1.50	1.50	1.00
EV	1.35	1.00	1.35	1.00
LL	1.75	1.75	0.00	1.00
LS	1.75	1.75	0.00	1.00

Note: Inward forces are positive, negative moment indicates inside face in tension.

						Str-1a		Str-1b		Str-IV		Service	
Dir	Factor	Force		Arm ft		F kips	M k-ft	F kips	M k-ft	F kips	M k-ft	F kips	M k-ft
H	DC	-1.14	x	0	=	-1.43	0.00	-1.03	0.00	-1.71	0	-1.14	0
H	DW	-0.18	x	0	=	-0.27	0.00	-0.12	0.00	-0.27	0	-0.18	0
H	EH	0.29	x	0	=	0.44	0.00	0.44	0.00	0.44	0	0.29	0
H	EV	-1.85	x	0	=	-2.50	0.00	-1.85	0.00	-2.50	0	-1.85	0
H	LL	0	x	0	=	0.00	0.00	0.00	0.00	0.00	0	0.00	0
H	LS	0	x	0	=	0.00	0.00	0.00	0.00	0.00	0	0.00	0
H	EH	0	x	0	=	0.00	0.00	0.00	0.00	0.00	0	0.00	0
H	EH	0	x	0	=	0.00	0.00	0.00	0.00	0.00	0	0.00	0
H	LS	0	x	0	=	0.00	0.00	0.00	0.00	0.00	0	0.00	0
Totals						-3.76	0.00	-2.56	0.00	-4.04	0.00	-2.88	0.00

Stem Design Forces: **Mu = 0.00 k-ft** **Ma = 0.00 k-ft** **Vu = -4.04 k**

	Str-1a	Str-1b	Str-IV	Service
FTG. B =	6 ft	6 ft	6 ft	6 ft
B/6 =	1 ft	1 ft	1 ft	1 ft
e =	0.029 ft	0.000 ft	0.030 ft	0.037 ft
Total Vertical =	26.19 k	19.00 k	27.50 k	19.73 k
Pressure @ P1 (Toe)	4.49 psf	3.17 psf	4.72 psf	3.41 psf
Pressure @ P2 (Heel)	4.24 psf	3.17 psf	4.45 psf	3.17 psf
Pressure @ FF Stem (Toe)	4.43 psf	3.17 psf	4.65 psf	3.35 psf
Pressure @ RF Stem (Heel)	4.39 psf	3.17 psf	4.61 psf	3.31 psf
Upward Bending Moment (Heel)	26.27 k-ft	19.40 k-ft	27.56 k-ft	19.68 k-ft
Upward Shear (Heel)	15.10 k	11.09 k	15.84 k	11.33 k
Downward Overburden Moment (Heel)	-15.15 k-ft	-11.22 k-ft	-15.15 k-ft	-11.22 k-ft
Downward Overburden Shear (Heel)	-8.65 k	-6.41 k	-8.65 k	-6.41 k
Downward Heel Weight Moment (Heel	-2.20 k-ft	-1.59 k-ft	-2.64 k-ft	-1.76 k-ft
Downward Heel Weight Shear (Heel)	-1.26 k	-0.91 k	-1.51 k	-1.01 k
Net Upward Bending Moment (Heel)	8.92 k-ft	6.60 k-ft	9.78 k-ft	6.70 k-ft
Net Upward Shear (Heel)	5.18 k	3.77 k	5.68 k	3.91 k
Upward Bending Moment (Toe)	5.03 k-ft	3.564 k-ft	5.283 k-ft	3.812 k-ft
Upward Shear (Toe)	6.69 k	4.75 k	7.03 k	5.07 k

Footing Design Forces: **Upward Mu = 9.78 k-ft** **Upward Ma = 6.70 k-ft** **Up. Shear Vu = 7.03 k**

DELTA
ENGINEERS, ARCHITECTS, & LAND SURVEYORS
860 Hooper Road, Endwell, NY 13760
www.deltaengineers.com
Phone: (607) 231-6600
Fax: (607) 231-6650

JOB	2014.059.004		
DESCIPTION	28'x10' Arch Footing 1 - Max. Live Load		
SHEET NO	OF	SCALE	
CALCULATED BY	YL	DATE	5/20/2014
CHECKED BY	RA	DATE	5-20-14

Footing Bottom Reinforcing design

Limit State: Strength

MATERIAL PROPERTIES:

1 Concrete Strength, F'c	5	ksi	
2 Reinforcing Steel Yield, Fy	60	ksi	
3 Concrete Unit Weight	150	pcf	
4 Soil Unit Weight	140	pcf	

Member Design Width b =	12.00	in	
Member Thickness Ts =	20.00	in	(3" Keyway)
Bar Cover =	3.00	in	
Bar Size =	5		
de=Ts-Cov-Bar Size/2 =	16.69	in	

Ec = 57000 * √f'c = 4031 ksi

Es = 29000 ksi

n = Es / Ec = 7.20

0.65 < β1 < 0.85 = 0.80

$$\rho_b = \frac{0.85\beta_1 \bullet f'c}{f_y} \bullet \left[\frac{87{,}000}{87{,}000 + f_y}\right] = 0.0335$$

fr = .37 * √f'c = 0.83 ksi

Unfactored Moment, Ma =	17.68	kip-ft
Design Ultimate Moment, Mu =	28.07	kip-ft
Ultimate Shear, Vu =	16.18	kips

Capacity Reduction Factors

Moment, ΦM =	0.9
Shear, ΦV =	0.9

dv = Greater of .72h or 0.9 de = 15.02 in

β = 2.0

Vc=ϕ(0.0316)β√f'c*b*dv= 22.92 kips/ft **> Vu OK**

$$\rho = \left[1 - \left(\sqrt{1 - \frac{2 \bullet M_u}{\phi b d^2 \bullet .85 f'c}}\right)\right] \bullet \frac{.85 f'c}{f_y} = 0.00189$$

Steel Area Req'd; As =ρ * b * d = 0.379 in^2/ft

Use #5 Bar @ 7.00 in oc

As Prov = 0.53 in^2/ft

ρ Prov = 0.00263 **OK**

Check Min As > 1.33 AsReq **OK**

φMn = φAsfy(de-a/2)/12 = 38.76 kip-ft **OK**

c=As*Fy/.85*f'c*β1*b = 0.773 in

c/de ≤ 0.42; c/de = 0.046 OK

a = β_1c = 0.619 in

Ig = $bt^3/12$ = 8000 in^4

y_t = T/2 = 10.00 in

Mcr = fr*(Ig / yt) = 55.16 kip-ft

1.2Mcr= 66.19 kip-ft

CHECK CRACKING

$$k = \sqrt{2\rho n + \rho n^2} - \rho n = 0.176$$

j = 1 - (k/3) = 0.941

fs = Ma/(As*j*d) = 25.69 ksi

max spa ≤ [(700γe) / (βsfs)] - 2dc = 17 in

dc= 2.31 in

Bs=1+dc/(0.7*(h-dc))= 1.187

γe= 0.75

DELTA
ENGINEERS, ARCHITECTS, & LAND SURVEYORS
860 Hooper Road, Endwell, NY 13760
www.deltaengineers.com
Phone: (607) 231-6600
Fax: (607) 231-6650

JOB	2014.059.004		
DESCIPTION	28'x10' Arch Footing 2 - Min. Live Load		
SHEET NO	OF	SCALE	
CALCULATED BY	YL	DATE	3/21/2014
CHECKED BY	SW	DATE	3/24/14

Structure Geometry

Toe Width	1	ft	Stem Height	5	ft	Backfill Soil (phi)	34 deg
Wall Width	12	in	Footing Thickness	1.917	ft	Soil Weight	140 pcf
Stem Width	2.25	ft	Fill Height	2	ft	Ka =	0.2827
Heel Width	2.75	ft	Structure Height	11.08	ft	LL Surcharge	3 ft
Footing Width	6	ft				Allowable Factored Brg Res.	14.1ksf

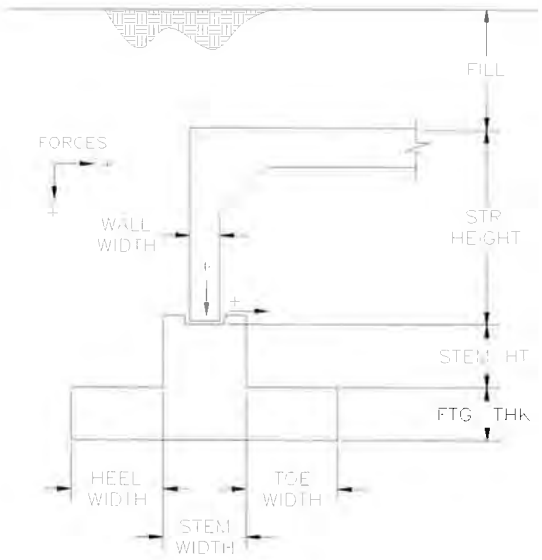

(Note: A Stem Ht. of Zero indicates a strip footing, not a pedestal footing as shown)

Pedestal Footing

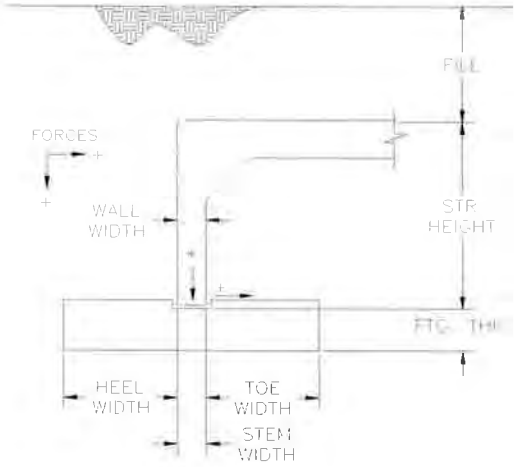

(Note: Ensure Stem Width equals Wall Width and Stem Ht. equals Zero when designing a strip footing)

Strip Footing

DELTA
ENGINEERS, ARCHITECTS, & LAND SURVEYORS
860 Hooper Road, Endwell, NY 13760
www.deltaengineers.com
Phone: (607) 231-6600
Fax: (607) 231-6650

JOB	2014.059.004		
DESCIPTION	28'x10' Arch Footing 2 - Min. Live Load		
SHEET NO	OF	SCALE	
CALCULATED BY	YL	DATE	3/21/2014
CHECKED BY	SLW	DATE	3/24/14

Final Condition with Live Load Effects - Sum Forces and Moments About "Heel"

Toe Width	1	ft
Wall Width	12	in
Stem Width	2.25	ft
Heel Width	2.75	ft
Footing Width	6	ft
Stem Height	5	ft
Footing Thickness	1.917	ft
Fill Height	2	ft
Structure Height	11.08	ft

Backfill Soil (phi) 34 deg

Soil Weight 140 pcf

Ka = 0.283

Limit States

Factor	Str-1a	Str-1b	Str IV	Serv
DC	1.25	0.90	1.50	1.00
DW	1.50	0.65	1.50	1.00
EH	0.90	0.90	0.90	1.00
EV	1.35	1.00	1.35	1.00
LL	1.75	1.75	0.00	1.00
LS	0.00	0.00	0.00	1.00

Resistance Factors

Sliding	0.9
Bearing	0.45
Moment	0.9
Shear	0.9

Factored Bearing Resistance 14.1ksf

Note: Downward and inward forces are positive

		Dir	Factor	Force		Arm ft		Str-1a F kips	Str-1a M k-ft	Str-1b F kips	Str-1b M k-ft	Str IV F kips	Str IV M k-ft	Str IV F kips	Str IV M k-ft
Structure Reaction		V	DC	3.49	x	3.88	=	4.36	16.90	3.14	12.17	5.24	20.29	3.49	13.52
		V	DW	0.57	x	3.88	=	0.86	3.31	0.37	1.44	0.86	3.31	0.57	2.21
		V	EH	0	x	3.88	=	0.00	0.00	0.00	0.00	0.00	0.00	0.00	0.00
		V	EV	7.53	x	3.88	=	10.17	39.39	7.53	29.2	10.17	39.39	7.53	29.18
		V	LL	3.91	x	3.88	=	6.84	26.51	6.84	26.51	0.00	0.00	3.91	15.15
		H	DC	-1.14	x	6.92	=	-1.43	-9.86	-1.03	-7.10	-1.71	-11.83	-1.14	-7.89
		H	DW	-0.18	x	6.92	=	-0.27	-1.87	-0.12	-0.81	-0.27	-1.87	-0.18	-1.25
		H	EH	0.29	x	6.92	=	0.26	1.81	0.26	1.81	0.26	1.81	0.29	2.01
		H	EV	-1.85	x	6.92	=	-2.50	-17.28	-1.85	-12.80	-2.50	-17.28	-1.85	-12.80
		H	LL	-2.19	x	6.92	=	-3.83	-26.51	-3.83	-26.51	0.00	0.00	-2.19	-15.15
		H	LS	0	x	6.92	=	0.00	0.00	0.00	0.00	0.00	0.00	0.00	0.00
Soil Above Heel		V	EV	6.962	x	1.38	=	9.40	12.92	6.96	9.57	9.40	12.92	6.96	9.57
Soil Above Stem		V	EV	1.14	x	3.06	=	1.55	4.73	1.14	3.51	1.55	4.73	1.14	3.51
EH from Soil Above		H	EH	3.582	x	3.46	=	3.22	11.15	3.22	11.15	3.22	11.15	3.58	12.39
EH on Stem FTG		H	EH	0.947	x	2.31	=	0.85	1.96	0.85	1.96	0.85	1.96	0.95	2.18
Stem Weight		V	DC	1.688	x	3.88	=	2.11	8.17	1.52	5.89	2.53	9.81	1.69	6.54
Ftg Weight		V	DC	1.725	x	3.00	=	2.16	6.47	1.55	4.66	2.59	7.76	1.73	5.18
Totals									77.83		60.63		82.17		64.36

	Str-1a	Str-1b	Str IV	Str IV
Total Vertical	37.44	29.06	32.32	27.02
Net Horizontal	-3.69	-2.49	-0.14	-0.54
Resultant Loacation	2.08 ft	2.09 ft	2.54 ft	2.38 ft
Eccentricity	0.92 ft	0.91 ft	0.46 ft	0.62 ft
bf'	4.16 ft	4.17 ft	5.08 ft	4.76 ft
Bearing Pressure	9.00 ksf	6.97 ksf	6.36 ksf	5.67 ksf
Eccentricity within middle half	YES	YES	YES	YES
Sliding Resistance	18.18 kips	14.11 kips	15.70 kips	13.12

DELTA
ENGINEERS, ARCHITECTS, & LAND SURVEYORS
860 Hooper Road, Endwell, NY 13760
www.deltaengineers.com
Phone: (607) 231-6600
Fax: (607) 231-6650

JOB	2014.059.004
DESCIPTION	28'x10' Arch Footing 2 - Min. Live Load
SHEET NO	OF SCALE
CALCULATED BY	YL DATE 3/21/2014
CHECKED BY	SLV DATE 3/24/14

Final Condition without Live Load Effects - Sum Forces and Moments About "Heel"

Toe Width	1	ft
Wall Width	12	in
Stem Width	2.25	ft
Heel Width	2.75	ft
Footing Width	6	ft
Stem Height	5	ft
Footing Thickness	1.917	ft
Fill Height	2	ft
Structure Height	11.08	ft

Backfill Soil (phi) 34 deg

Soil Weight 140 pcf

Ka = 0.283

Limit States

Factor	Str-1a	Str-1b	Str IV	Serv
DC	1.25	0.90	1.50	1.00
DW	1.50	0.65	1.50	1.00
EH	0.90	0.90	0.90	1.00
EV	1.35	1.00	1.35	1.00
LL	1.75	1.75	0.00	1.00
LS	0.00	0.00	0.00	1.00

Resistance Factors

Sliding	0.9
Bearing	0.45
Moment	0.9
Shear	0.9

Factored Bearing Resistance 14.1ksf

Note: Downward and inward forces are positive

		Dir	Factor	Force		Arm ft		Str-1a F kips	Str-1a M k-ft	Str-1b F kips	Str-1b M k-ft	Str IV F kips	Str IV M k-ft	Str IV F kips	Str IV M k-ft
Structure Reaction		V	DC	3.49	x	3.88	=	4.36	16.90	3.14	12.17	5.24	20.29	3.49	13.52
		V	DW	0.57	x	3.88	=	0.86	3.31	0.37	1.44	0.86	3.31	0.57	2.21
		V	EH	0	x	3.88	=	0.00	0.00	0.00	0.00	0.00	0.00	0.00	0.00
		V	EV	7.53	x	3.88	=	10.17	39.39	7.53	29.2	10.17	39.39	7.53	29.18
		V	LL	0	x	3.88	=	0.00	0.00	0.00	0.00	0.00	0.00	0.00	0.00
		H	DC	-1.14	x	6.92	=	-1.43	-9.86	-1.03	-7.10	-1.71	-11.83	-1.14	-7.89
		H	DW	-0.18	x	6.92	=	-0.27	-1.87	-0.12	-0.81	-0.27	-1.87	-0.18	-1.25
		H	EH	0.29	x	6.92	=	0.26	1.81	0.26	1.81	0.26	1.81	0.29	2.01
		H	EV	-1.85	x	6.92	=	-2.50	-17.28	-1.85	-12.80	-2.50	-17.28	-1.85	-12.80
		H	LL	0	x	6.92	=	0.00	0.00	0.00	0.00	0.00	0.00	0.00	0.00
		H	LS	0	x	6.92	=	0.00	0.00	0.00	0.00	0.00	0.00	0.00	0.00
Soil Above Heel		V	EV	6.962	x	1.38	=	9.40	12.92	6.96	9.57	9.40	12.92	6.96	9.57
Soil Above Stem		V	EV	1.14	x	3.06	=	1.55	4.73	1.14	3.51	1.55	4.73	1.14	3.51
EH from Soil Above		H	EH	3.582	x	3.46	=	3.22	11.15	3.22	11.15	3.22	11.15	3.58	12.39
EH on Stem FTG		H	EH	0.947	x	2.31	=	0.85	1.96	0.85	1.96	0.85	1.96	0.95	2.18
Stem Weight		V	DC	1.688	x	3.88	=	2.11	8.17	1.52	5.89	2.53	9.81	1.69	6.54
Ftg Weight		V	DC	1.725	x	3.00	=	2.16	6.47	1.55	4.66	2.59	7.76	1.73	5.18
Totals									77.83		60.62		82.17		64.35

	Str-1a	Str-1b	Str IV	Str IV
Total Vertical	30.59	22.22	32.32	23.11
Net Horizontal	0.14	1.34	-0.14	1.65
Resultant Loacation	2.54 ft	2.73 ft	2.54 ft	2.78 ft
Eccentricity	0.46 ft	0.27 ft	0.46 ft	0.22 ft
bf'	5.09 ft	5.46 ft	5.08 ft	5.57 ft
Bearing Pressure	6.01 ksf	4.07 ksf	6.36 ksf	4.15 ksf
Eccentricity within middle half	YES	YES	YES	YES
Sliding Resistance	14.86 kips	10.79 kips	15.70 kips	11.22

DELTA
ENGINEERS, ARCHITECTS, & LAND SURVEYORS
860 Hooper Road, Endwell, NY 13760
www.deltaengineers.com
Phone: (607) 231-6600
Fax: (607) 231-6650

JOB	2014.059.004
DESCIPTION	28'x10' Arch Footing 2 - Min. Live Load
SHEET NO	OF
SCALE	
CALCULATED BY	YL
DATE	3/21/2014
CHECKED BY	SLJ
DATE	3/24/14

Stem and Footing Design Forces - Stablilty about Heel

Footing Width	6	ft
Toe width	1	ft
Heel Width	2.75	ft
Footing Thickness	1.917	ft
Overburden Ht over Heel	18.08	ft

Limit States

Factor	Str-1a	Str-1b	Str-IV	Serv
DC	1.25	0.90	1.50	1.00
DW	1.50	0.65	1.50	1.00
EH	0.90	0.90	0.90	1.00
EV	1.35	1.00	1.35	1.00
LL	1.75	1.75	0.00	1.00
LS	0.00	0.00	0.00	1.00

Note: Inward forces are positive, negative moment indicates inside face in tension.

Dir	Factor	Force		Arm ft		Str-1a F kips	Str-1a M k-ft	Str-1b F kips	Str-1b M k-ft	Str-IV F kips	Str-IV M k-ft	Service F kips	Service M k-ft
H	DC	-1.14	x	5	=	-1.43	-7.13	-1.03	-5.13	-1.71	-8.55	-1.14	-5.7
H	DW	-0.18	x	5	=	-0.27	-1.35	-0.12	-0.59	-0.27	-1.35	-0.18	-0.9
H	EH	0.29	x	5	=	0.26	1.31	0.26	1.31	0.26	1.305	0.29	1.45
H	EV	-1.85	x	5	=	-2.50	-12.49	-1.85	-9.25	-2.50	-12.5	-1.85	-9.25
H	LL	-2.19	x	5	=	-3.83	-19.16	-3.83	-19.16	0.00	0	-2.19	-10.95
H	LS	0	x	5	=	0.00	0.00	0.00	0.00	0.00	0	0.00	0
H	EH	2.589	x	2.5	=	2.33	5.83	2.33	5.83	2.33	5.826	2.59	6.473
H	EH	0.495	x	1.667	=	0.45	0.74	0.45	0.74	0.45	0.742	0.49	0.825
Totals						-4.99	-32.25	-3.79	-26.25	-1.44	-14.51	-1.99	-18.05

Stem Design Forces:	**Mu =**	**-32.25 k-ft**	**Ma =**	**-18.05 k-ft**	**Vu =**	**-4.99 k**		
FTG: B =		6 ft		6 ft		6 ft		6 ft
B/6 =		1 ft		1 ft		1 ft		1 ft
e =		0.921 ft		0.914 ft		0.458 ft		0.618 ft
Total Vertical =		37.44 k		29.06 k		32.32 k		27.02 k
Pressure @ P1 (Toe)		0.49 psf		0.42 psf		2.92 psf		1.72 psf
Pressure @ P2 (Heel)		11.98 psf		9.27 psf		7.85 psf		7.29 psf
Pressure @ FF Stem (Toe)		2.41 psf		1.89 psf		3.74 psf		2.65 psf
Pressure @ RF Stem (Heel)		6.72 psf		5.21 psf		5.59 psf		4.74 psf
Upward Bending Moment (Heel)		38.68 k-ft		29.94 k-ft		26.84 k-ft		24.34 k-ft
Upward Shear (Heel)		25.72 k		19.91 k		18.48 k		16.53 k
Downward Overburden Moment (Heel)		-12.92 k-ft		-9.57 k-ft		-12.92 k-ft		-9.57 k-ft
Downward Overburden Shear (Heel)		-9.40 k		-6.96 k		-9.40 k		-6.96 k
Downward Heel Weight Moment (Heel)		-1.36 k-ft		-0.98 k-ft		-1.63 k-ft		-1.09 k-ft
Downward Heel Weight Shear (Heel)		-0.99 k		-0.71 k		-1.19 k		-0.79 k
Net Upward Bending Moment (Heel)		24.40 k-ft		19.39 k-ft		12.29 k-ft		13.68 k-ft
Net Upward Shear (Heel)		15.33 k		12.24 k		7.90 k		8.78 k
Upward Bending Moment (Toe)		0.5661 k-ft		0.4547 k-ft		1.598 k-ft		1.015 k-ft
Upward Shear (Toe)		1.45 k		1.16 k		3.33 k		2.18 k
Footing Design Forces:	**Upward Mu =**	**24.40 k-ft**	**Upward Ma =**	**13.68 k-ft**	**Up. Shear Vu =**	**15.33 k**		

DELTA
ENGINEERS, ARCHITECTS, & LAND SURVEYORS
860 Hooper Road, Endwell, NY 13760
www.deltaengineers.com
Phone: (607) 231-6600
Fax: (607) 231-6650

JOB	2014.059.004		
DESCIPTION	28'x10' Arch Footing 2 - Min. Live Load		
SHEET NO.	OF	SCALE	
CALCULATED BY	YL	DATE	3/21/2014
CHECKED BY	SLU	DATE	3/24/14

Stem and Footing Design Forces - Stablilty about Heel - structure without live load reaction

Footing Width	6	ft
Toe width	1	ft
Heel Width	2.75	ft
Footing Thickness	1.917	ft
Overburned Ht over Heel	18.08	ft

Limit States

Factor	Str-1a	Str-1b	Str-IV	Serv
DC	1.25	0.90	1.50	1.00
DW	1.50	0.65	1.50	1.00
EH	0.90	0.90	0.90	1.00
EV	1.35	1.00	1.35	1.00
LL	1.75	1.75	0.00	1.00
LS	0.00	0.00	0.00	1.00

Note: Inward forces are positive, negative moment indicates inside face in tension.

Dir	Factor	Force		Arm ft		Str-1a F kips	Str-1a M k-ft	Str-1b F kips	Str-1b M k-ft	Str-IV F kips	Str-IV M k-ft	Service F kips	Service M k-ft
H	DC	-1.14	x	5	=	-1.43	-7.13	-1.03	-5.13	-1.71	-8.55	-1.14	-5.7
H	DW	-0.18	x	5	=	-0.27	-1.35	-0.12	-0.59	-0.27	-1.35	-0.18	-0.9
H	EH	0.29	x	5	=	0.26	1.31	0.26	1.31	0.26	1.305	0.29	1.45
H	EV	-1.85	x	5	=	-2.50	-12.49	-1.85	-9.25	-2.50	-12.5	-1.85	-9.25
H	LL	0	x	5	=	0.00	0.00	0.00	0.00	0.00	0	0.00	0
H	LS	0	x	5	=	0.00	0.00	0.00	0.00	0.00	0	0.00	0
H	EH	2.589	x	2.5	=	2.33	5.83	2.33	5.83	2.33	5.826	2.59	6.473
H	EH	0.495	x	1.667	=	0.45	0.74	0.45	0.74	0.45	0.742	0.49	0.825
Totals						-1.16	-13.09	0.04	-7.09	-1.44	-14.51	0.20	-7.10

	Str-1a	Str-1b	Str-IV	Service
Stem Design Forces:	**Mu = -14.51 k-ft**	**Ma = -7.10 k-ft**	**Vu = -1.44 k**	
FTG. B =	6 ft	6 ft	6 ft	6 ft
B/6 =	1 ft	1 ft	1 ft	1 ft
e =	0.456 ft	0.272 ft	0.458 ft	0.215 ft
Total Vertical =	30.59 k	22.22 k	32.32 k	23.11 k
Pressure @ P1 (Toe)	2.77 psf	2.70 psf	2.92 psf	3.02 psf
Pressure @ P2 (Heel)	7.42 psf	4.71 psf	7.85 psf	4.68 psf
Pressure @ FF Stem (Toe)	3.55 psf	3.03 psf	3.74 psf	3.30 psf
Pressure @ RF Stem (Heel)	5.29 psf	3.79 psf	5.59 psf	3.92 psf
Upward Bending Moment (Heel)	25.39 k-ft	16.64 k-ft	26.84 k-ft	16.74 k-ft
Upward Shear (Heel)	17.49 k	11.68 k	18.48 k	11.83 k
Downward Overburden Moment (Heel	-12.92 k-ft	-9.57 k-ft	-12.92 k-ft	-9.57 k-ft
Downward Overburden Shear (Heel)	-9.40 k	-6.96 k	-9.40 k	-6.96 k
Downward Heel Weight Moment (Hee	-1.36 k-ft	-0.98 k-ft	-1.63 k-ft	-1.09 k-ft
Downward Heel Weight Shear (Heel)	-0.99 k	-0.71 k	-1.19 k	-0.79 k
Net Upward Bending Moment (Heel)	11.10 k-ft	6.09 k-ft	12.29 k-ft	6.08 k-ft
Net Upward Shear (Heel)	7.10 k	4.01 k	7.90 k	4.07 k
Upward Bending Moment (Toe)	1.516 k-ft	1.405 k-ft	1.598 k-ft	1.557 k-ft
Upward Shear (Toe)	3.16 k	2.87 k	3.33 k	3.16 k
Footing Design Forces:	**Upward Mu = 12.29 k-ft**	**Upward Ma = 6.08 k-ft**	**Up. Shear Vu = 7.90 k**	

DELTA
ENGINEERS, ARCHITECTS, & LAND SURVEYORS
860 Hooper Road, Endwell, NY 13760
www.deltaengineers.com
Phone: (607) 231-6600
Fax: (607) 231-6650

JOB	2014.059.004
DESCIPTION	28'x10' Arch Footing 2 - Min. Live Load
SHEET NO	OF
SCALE	
CALCULATED BY	YL
DATE	3/21/2014
CHECKED BY	S.W.
DATE	3/24/14

Final Condition with Live Load Effects - Sum Forces and Moments About "Toe"

Toe Width	1	ft
Wall Width	12	in
Stem Width	2.25	ft
Heel Width	2.75	ft
Footing Width	6	ft
Stem Height	5	ft
Footing Thickness	1.917	ft
Fill Height	2	ft
Structure Height	11.08	ft

Backfill Soil (phi): 34 deg

Soil Weight: 140 pcf

Ka = 0.28

Limit States

Factor	Str-1a	Str-1b	Str IV	Serv
DC	1.25	0.90	1.50	1.00
DW	1.50	0.65	1.50	1.00
EH	1.50	1.50	1.50	1.00
EV	1.35	1.00	1.35	1.00
LL	1.75	1.75	0.00	1.00
LS	1.75	1.75	0.00	1.00

Resistance Factors

Sliding	0.9
Bearing	0.45
Moment	0.9
Shear	0.9

Factored Bearing Resistance: 14.1

LL Surcharge: 3 ft

Note: Downward and outward forces are positive

		Dir	Factor	Force		Arm ft		Str-1a F kips	Str-1a M k-ft	Str-1b F kips	Str-1b M k-ft	Str IV F kips	Str IV M k-ft	Str IV F kips	Str IV M k-ft
Structure Reaction		V	DC	3.49	x	2.13	=	4.36	9.27	3.14	6.67	5.24	11.12	3.49	7.42
		V	DW	0.57	x	2.13	=	0.86	1.82	0.37	0.79	0.86	1.82	0.57	1.21
		V	EH	0	x	2.13	=	0.00	0.00	0.00	0.00	0.00	0.00	0.00	0.00
		V	EV	7.53	x	2.13	=	10.17	21.60	7.53	16.0	10.17	21.60	7.53	16.00
		V	LL	3.91	x	2.13	=	6.84	14.54	6.84	14.54	0.00	0.00	3.91	8.31
		H	DC	1.14	x	6.92	=	1.43	9.86	1.03	7.10	1.71	11.83	1.14	7.89
		H	DW	0.18	x	6.92	=	0.27	1.87	0.12	0.81	0.27	1.87	0.18	1.25
		H	EH	-0.29	x	6.92	=	-0.44	-3.01	-0.44	-3.01	-0.44	-3.01	-0.29	-2.01
		H	EV	1.85	x	6.92	=	2.50	17.28	1.85	12.80	2.50	17.28	1.85	12.80
		H	LL	2.19	x	6.92	=	3.83	26.51	3.83	26.51	0.00	0.00	2.19	15.15
		H	LS	0	x	6.92	=	0.00	0.00	0.00	0.00	0.00	0.00	0.00	0.00
Soil Above Heel		V	EV	6.962	x	4.63	=	9.40	43.47	6.96	32.20	9.40	43.47	6.96	32.20
Soil Above Stem		V	EV	1.14	x	2.94	=	1.55	4.54	1.14	3.36	1.55	4.54	1.14	3.36
EH from Soil Above		H	EH	-3.58	x	3.46	=	-5.37	-18.58	-5.37	-18.58	-5.37	-18.58	-3.58	-12.39
EH on Stem FTG		H	EH	-0.95	x	2.31	=	-1.42	-3.27	-1.42	-3.27	-1.42	-3.27	-0.95	-2.18
Stem Weight		V	DC	1.688	x	2.13	=	2.11	4.48	1.52	3.23	2.53	5.38	1.69	3.59
Ftg Weight		V	DC	1.725	x	3.00	=	2.16	6.47	1.55	4.66	2.59	7.76	1.73	5.18
LS on Stem FTG		H	LS	-0.82	x	3.46	=	-1.44	-4.97	-1.44	-4.97	0.00	0.00	-0.82	-2.84
Totals									131.86		98.83		101.80		94.92

	Str-1a	Str-1b	Str IV	Str IV
Total Vertical	37.44	29.06	32.32	27.02
Net Horizontal	-0.64	-1.84	-2.75	-0.28
Resultant Loacation	3.52 ft	3.40 ft	3.15 ft	3.51 ft
Eccentricity	-0.52 ft	-0.40 ft	-0.15 ft	-0.51 ft
bf'	4.96 ft	5.20 ft	5.70 ft	4.97 ft
Bearing Pressure	7.55 ksf	5.59 ksf	5.67 ksf	5.43 ksf
Eccentricity within middle half	YES	YES	YES	YES
Sliding Resistance	18.18 kips	14.11 kips	15.70 kips	13.12

DELTA
ENGINEERS, ARCHITECTS, & LAND SURVEYORS
860 Hooper Road, Endwell, NY 13760
www.deltaengineers.com
Phone: (607) 231-6600
Fax: (607) 231-6650

JOB	2014.059.004		
DESCIPTION	28'x10' Arch Footing 2 - Min. Live Load		
SHEET NO	OF	SCALE	
CALCULATED BY	YL	DATE	3/21/2014
CHECKED BY	SLU	DATE	3/24/14

Final Condition without Live Load Effects - Sum Forces and Moments About "Toe"

Toe Width	1 ft	Backfill Soil (phi)	34 deg	Soil Weight	140 pcf	
Wall Width	12 in	Limit States		Ka =	0.283	
Stem Width	2.25 ft			Resistance Factors		
Heel Width	2.75 ft			Sliding	0.9	
Footing Width	6 ft			Bearing	0.45	
Stem Height	5 ft			Moment	0.9	
Footing Thickness	1.917 ft			Shear	0.9	
Fill Height	2 ft					
Structure Height	11.08 ft			Factored Bearing Resistance	14.1	
Note: Downward and outward forces are positive				LL Surcharge	3 ft	

Factor	Str-1a	Str-1b	Str IV	Serv
DC	1.25	0.90	1.50	1.00
DW	1.50	0.65	1.50	1.00
EH	1.50	1.50	1.50	1.00
EV	1.35	1.00	1.35	1.00
LL	1.75	1.75	0.00	1.00
LS	1.75	1.75	0.00	1.00

		Dir	Factor	Force		Arm ft		Str-1a F kips	Str-1a M k-ft	Str-1b F kips	Str-1b M k-ft	Str IV F kips	Str IV M k-ft	Str IV F kips	Str IV M k-ft
Structure Reaction		V	DC	3.49	x	2.13	=	4.36	9.27	3.14	6.67	5.24	11.12	3.49	7.42
		V	DW	0.57	x	2.13	=	0.86	1.82	0.37	0.79	0.86	1.82	0.57	1.21
		V	EH	0	x	2.13	=	0.00	0.00	0.00	0.00	0.00	0.00	0.00	0.00
		V	EV	7.53	x	2.13	=	10.17	21.60	7.53	16.0	10.17	21.60	7.53	16.00
		V	LL	0	x	2.13	=	0.00	0.00	0.00	0.00	0.00	0.00	0.00	0.00
		H	DC	1.14	x	6.92	=	1.43	9.86	1.03	7.10	1.71	11.83	1.14	7.89
		H	DW	0.18	x	6.92	=	0.27	1.87	0.12	0.81	0.27	1.87	0.18	1.25
		H	EH	-0.29	x	6.92	=	-0.44	-3.01	-0.44	-3.01	-0.44	-3.01	-0.29	-2.01
		H	EV	1.85	x	6.92	=	2.50	17.28	1.85	12.80	2.50	17.28	1.85	12.80
		H	LL	0	x	6.92	=	0.00	0.00	0.00	0.00	0.00	0.00	0.00	0.00
		H	LS	0	x	6.92	=	0.00	0.00	0.00	0.00	0.00	0.00	0.00	0.00
Soil Above Heel		V	EV	6.962	x	4.63	=	9.40	43.47	6.96	32.20	9.40	43.47	6.96	32.20
Soil Above Stem		V	EV	1.14	x	2.94	=	1.55	4.54	1.14	3.36	1.55	4.54	1.14	3.36
EH from Soil Above		H	EH	-3.58	x	3.46	=	-5.37	-18.58	-5.37	-18.58	-5.37	-18.58	-3.58	-12.39
EH on Stem FTG		H	EH	-0.95	x	2.31	=	-1.42	-3.27	-1.42	-3.27	-1.42	-3.27	-0.95	-2.18
Stem Weight		V	DC	1.688	x	2.13	=	2.11	4.48	1.52	3.23	2.53	5.38	1.69	3.59
Ftg Weight		V	DC	1.725	x	3.00	=	2.16	6.47	1.55	4.66	2.59	7.76	1.73	5.18
LS on Stem FTG		H	LS	-0.82	x	3.46	=	-1.44	-4.97	-1.44	-4.97	0.00	0.00	-0.82	-2.84
Totals									90.81		57.78		101.80		71.46

	Str-1a	Str-1b	Str IV	Str IV
Total Vertical	30.59	22.22	32.32	23.11
Net Horizontal	-4.47	-5.67	-2.75	-2.47
Resultant Loacation	2.97 ft	2.60 ft	3.15 ft	3.09 ft
Eccentricity	0.03 ft	0.40 ft	0.15 ft	0.09 ft
bf'	5.94 ft	5.20 ft	5.70 ft	5.82 ft
Bearing Pressure	5.15 ksf	4.27 ksf	5.67 ksf	3.97 ksf
Eccentricity within middle half	YES	YES	YES	YES
Sliding Resistance	14.86 kips	10.79 kips	15.70 kips	11.22

DELTA
ENGINEERS, ARCHITECTS, & LAND SURVEYORS
860 Hooper Road, Endwell, NY 13760
www.deltaengineers.com
Phone: (607) 231-6600
Fax: (607) 231-6650

JOB	2014.059.004		
DESCIPTION	28'x10' Arch Footing 2 - Min. Live Load		
SHEET NO		OF	SCALE
CALCULATED BY	YL	DATE	3/21/2014
CHECKED BY	SLJ	DATE	3/24/14

Temporary Condition Prior to Structure Placement - Sum Forces and Moments About "Toe"

Toe Width	1 ft	Backfill Soil (phi)	34 deg	Soil Weight	140 pcf
Wall Width	12 in			Ka =	0.283
Stem Width	2.25 ft				
Heel Width	2.75 ft				
Footing Width	6 ft				
Stem Height	5 ft				
Footing Thickness	1.917 ft				
Fill Height	0 ft				
Structure Height	0 ft				

Limit States

Factor	Str-1a	Str-1b	Str IV	Serv
DC	1.25	0.90	1.50	1.00
DW	1.50	0.65	1.50	1.00
EH	1.50	1.50	1.50	1.00
EV	1.35	1.00	1.35	1.00
LL	1.75	1.75	0.00	1.00
LS	1.75	1.75	0.00	1.00

Resistance Factors

Sliding	0.9
Bearing	0.45
Moment	0.9
Shear	0.9

Factored Bearing Resistance 14.1ksf

Note: Downward and outward forces are positive

LL Surcharge 3 ft

		Dir	Factor	Force		Arm ft		Str-1a F kips	Str-1a M k-ft	Str-1b F kips	Str-1b M k-ft	Str IV F kips	Str IV M k-ft	Str IV F kips	Str IV M k-ft
Structure Reaction		V	DC	0	x	2.13	=	0.00	0.00	0.00	0.00	0.00	0.00	0.00	0.00
		V	DW	0	x	2.13	=	0.00	0.00	0.00	0.00	0.00	0.00	0.00	0.00
		V	EH	0	x	2.13	=	0.00	0.00	0.00	0.00	0.00	0.00	0.00	0.00
		V	EV	0	x	2.13	=	0.00	0.00	0.00	0.0	0.00	0.00	0.00	0.00
		V	LL	0	x	2.13	=	0.00	0.00	0.00	0.00	0.00	0.00	0.00	0.00
		H	DC	0	x	6.92	=	0.00	0.00	0.00	0.00	0.00	0.00	0.00	0.00
		H	DW	0	x	6.92	=	0.00	0.00	0.00	0.00	0.00	0.00	0.00	0.00
		H	EH	0	x	6.92	=	0.00	0.00	0.00	0.00	0.00	0.00	0.00	0.00
		H	EV	0	x	6.92	=	0.00	0.00	0.00	0.00	0.00	0.00	0.00	0.00
		H	LL	0	x	6.92	=	0.00	0.00	0.00	0.00	0.00	0.00	0.00	0.00
Soil Above Heel		V	EV	1.925	x	4.63	=	2.60	12.02	1.93	8.90	2.60	12.02	1.93	8.90
Soil Above Stem		V	EV	0.00	x	2.94	=	0.00	0.00	0.00	0.00	0.00	0.00	0.00	0.00
EH from Soil Above		H	EH	0	x	3.46	=	0.00	0.00	0.00	0.00	0.00	0.00	0.00	0.00
EH on Stem FTG		H	EH	-0.95	x	2.31	=	-1.42	-3.27	-1.42	-3.27	-1.42	-3.27	-0.95	-2.18
Stem Weight		V	DC	1.688	x	2.13	=	2.11	4.48	1.52	3.23	2.53	5.38	1.69	3.59
Ftg Weight		V	DC	1.725	x	3.00	=	2.16	6.47	1.55	4.66	2.59	7.76	1.73	5.18
LS on Stem FTG		H	LS	-0.82	x	3.46	=	-1.44	-4.97	-1.44	-4.97	0.00	0.00	-0.82	-2.84
Totals									14.73		8.54		21.89		12.64
Total Vertical								6.86		5.00		7.72		5.34	
Net Horizontal								-2.86		-2.86		-1.42		-1.77	
Resultant Loacation								2.15 ft		1.71 ft		2.84 ft		2.37 ft	
Eccentricity								0.85 ft		1.29 ft		0.16 ft		0.63 ft	
bf'								4.29 ft		3.42 ft		5.67 ft		4.74 ft	
Bearing Pressure								1.60 ksf		1.46 ksf		1.36 ksf		1.13 ksf	
Eccentricity within middle half								YES		YES		YES		YES	
Sliding Resistance								3.33 kips			kips	3.75 kips		2.59	

DELTA
ENGINEERS, ARCHITECTS, & LAND SURVEYORS
860 Hooper Road, Endwell, NY 13760
www.deltaengineers.com
Phone: (607) 231-6600
Fax: (607) 231-6650

JOB	2014.059.004
DESCIPTION	28'x10' Arch Footing 2 - Min. Live Load
SHEET NO	OF SCALE
CALCULATED BY	YL DATE 3/21/2014
CHECKED BY	SCW DATE 3/24/14

Stem and Footing Design Forces - Stablilty about Toe

Footing Width	6	ft
Toe width	1	ft
Heel Width	2.75	ft
Footing Thickness	1.917	ft
Overburden Ht over Heel	18.08	ft

Limit States

Factor	Str-1a	Str-1b	Str-IV	Serv
DC	1.25	0.90	1.50	1.00
DW	1.50	0.65	1.50	1.00
EH	1.50	1.50	1.50	1.00
EV	1.35	1.00	1.35	1.00
LL	1.75	1.75	0.00	1.00
LS	1.75	1.75	0.00	1.00

Note: Inward forces are positive, negative moment indicates inside face in tension.

Dir	Factor	Force		Arm ft		Str-1a F kips	Str-1a M k-ft	Str-1b F kips	Str-1b M k-ft	Str-IV F kips	Str-IV M k-ft	Service F kips	Service M k-ft
H	DC	-1.14	x	5	=	-1.43	-7.13	-1.03	-5.13	-1.71	-8.55	-1.14	-5.7
H	DW	-0.18	x	5	=	-0.27	-1.35	-0.12	-0.59	-0.27	-1.35	-0.18	-0.9
H	EH	0.29	x	5	=	0.44	2.18	0.44	2.18	0.44	2.175	0.29	1.45
H	EV	-1.85	x	5	=	-2.50	-12.49	-1.85	-9.25	-2.50	-12.5	-1.85	-9.25
H	LL	-2.19	x	5	=	-3.83	-19.16	-3.83	-19.16	0.00	0	-2.19	-11
H	LS	0	x	5	=	0.00	0.00	0.00	0.00	0.00	0	0.00	0
H	EH	2.589	x	2.5	=	3.88	9.71	3.88	9.71	3.88	9.709	2.59	6.473
H	EH	0.495	x	1.667	=	0.74	1.24	0.74	1.24	0.74	1.237	0.49	0.825
H	LS	1.484	x	2.5	=	2.60	6.49	2.60	6.49	0.00	0	1.48	3.711
Totals						-0.37	-20.51	0.83	-14.51	0.58	-9.27	-0.50	-14.34

	Str-1a	Str-1b	Str-IV	Service
Stem Design Forces:	**Mu = -20.51 k-ft**	**Ma = -14.34 k-ft**	**Vu = -0.37 k**	
FTG. B =	6 ft	6 ft	6 ft	6 ft
B/6 =	1 ft	1 ft	1 ft	1 ft
e =	-0.522 ft	-0.401 ft	-0.150 ft	-0.513 ft
Total Vertical =	37.44 k	29.06 k	32.32 k	27.02 k
Pressure @ P1 (Toe)	2.98 psf	2.90 psf	4.58 psf	2.19 psf
Pressure @ P2 (Heel)	9.50 psf	6.78 psf	6.19 psf	6.81 psf
Pressure @ FF Stem (Toe)	4.07 psf	3.55 psf	4.85 psf	2.96 psf
Pressure @ RF Stem (Heel)	6.51 psf	5.01 psf	5.45 psf	4.70 psf
Upward Bending Moment (Heel)	32.15 k-ft	23.41 k-ft	22.49 k-ft	23.09 k-ft
Upward Shear (Heel)	22.01 k	16.21 k	16.02 k	15.82 k
Downward Overburden Moment (Heel)	-12.92 k-ft	-9.57 k-ft	-12.92 k-ft	-9.57 k-ft
Downward Overburden Shear (Heel)	-9.40 k	-6.96 k	-9.40 k	-6.96 k
Downward Heel Weight Moment (Heel)	-1.36 k-ft	-0.98 k-ft	-1.63 k-ft	-1.09 k-ft
Downward Heel Weight Shear (Heel)	-0.99 k	-0.71 k	-1.19 k	-0.79 k
Net Upward Bending Moment (Heel)	17.87 k-ft	12.86 k-ft	7.93 k-ft	12.43 k-ft
Net Upward Shear (Heel)	11.63 k	8.54 k	5.43 k	8.07 k
Upward Bending Moment (Toe)	1.671 k-ft	1.56 k-ft	2.334 k-ft	1.225 k-ft
Upward Shear (Toe)	3.52 k	3.23 k	4.71 k	2.58 k
Footing Design Forces:	**Upward Mu = 17.87 k-ft**	**Upward Ma = 12.43 k-ft**	**Up. Shear Vu = 11.63 k**	

DELTA
ENGINEERS, ARCHITECTS, & LAND SURVEYORS
860 Hooper Road, Endwell, NY 13760
www.deltaengineers.com
Phone: (607) 231-6600
Fax: (607) 231-6650

JOB	2014.059.004		
DESCIPTION	28'x10' Arch Footing 2 - Min. Live Load		
SHEET NO	OF	SCALE	
CALCULATED BY	YL	DATE	3/21/2014
CHECKED BY	SLV	DATE	3/24/14

Stem and Footing Design Forces - Stablilty about Toe - structure without live load reaction

Footing Width	6 ft
Toe width	1 ft
Heel Width	2.75 ft
Footing Thickness	1.917 ft
Overburden Ht over Heel	18.08 ft

Limit States

Factor	Str-1a	Str-1b	Str-IV	Serv
DC	1.25	0.90	1.50	1.00
DW	1.50	0.65	1.50	1.00
EH	1.50	1.50	1.50	1.00
EV	1.35	1.00	1.35	1.00
LL	1.75	1.75	0.00	1.00
LS	1.75	1.75	0.00	1.00

Note: Inward forces are positive, negative moment indicates inside face in tension.

						Str-1a		Str-1b		Str-IV		Service	
Dir	Factor	Force		Arm ft		F kips	M k-ft	F kips	M k-ft	F kips	M k-ft	F kips	M k-ft
H	DC	-1.14	x	5	=	-1.43	-7.13	-1.03	-5.13	-1.71	-8.55	-1.14	-5.7
H	DW	-0.18	x	5	=	-0.27	-1.35	-0.12	-0.59	-0.27	-1.35	-0.18	-0.9
H	EH	0.29	x	5	=	0.44	2.18	0.44	2.18	0.44	2.175	0.29	1.45
H	EV	-1.85	x	5	=	-2.50	-12.49	-1.85	-9.25	-2.50	-12.5	-1.85	-9.25
H	LL	0	x	5	=	0.00	0.00	0.00	0.00	0.00	0	0.00	0
H	LS	0	x	5	=	0.00	0.00	0.00	0.00	0.00	0	0.00	0
H	EH	2.589	x	2.5	=	3.88	9.71	3.88	9.71	3.88	9.709	2.59	6.473
H	EH	0.495	x	1.667	=	0.74	1.24	0.74	1.24	0.74	1.237	0.49	0.825
H	LS	1.484	x	2.5	=	2.60	6.49	2.60	6.49	0.00	0	1.48	3.711
Totals						3.47	-1.35	4.67	4.65	0.58	-9.27	1.69	-3.39

Stem Design Forces:	**Mu = -9.27 k-ft**	**Ma = -3.39 k-ft**	**Vu = 0.58 k**	
FTG. B =	6 ft	6 ft	6 ft	6 ft
B/6 =	1 ft	1 ft	1 ft	1 ft
e =	0.032 ft	0.400 ft	0.150 ft	0.092 ft
Total Vertical =	30.59 k	22.22 k	32.32 k	23.11 k
Pressure @ P1 (Toe)	5.26 psf	5.18 psf	6.19 psf	4.21 psf
Pressure @ P2 (Heel)	4.94 psf	2.22 psf	4.58 psf	3.50 psf
Pressure @ FF Stem (Toe)	5.21 psf	4.69 psf	5.92 psf	4.09 psf
Pressure @ RF Stem (Heel)	5.09 psf	3.58 psf	5.32 psf	3.82 psf
Upward Bending Moment (Heel)	18.86 k-ft	10.12 k-ft	18.25 k-ft	13.63 k-ft
Upward Shear (Heel)	13.78 k	7.98 k	13.61 k	10.06 k
Downward Overburden Moment (Heel)	-12.92 k-ft	-9.57 k-ft	-12.92 k-ft	-9.57 k-ft
Downward Overburden Shear (Heel)	-9.40 k	-6.96 k	-9.40 k	-6.96 k
Downward Heel Weight Moment (Heel	-1.36 k-ft	-0.98 k-ft	-1.63 k-ft	-1.09 k-ft
Downward Heel Weight Shear (Heel)	-0.99 k	-0.71 k	-1.19 k	-0.79 k
Net Upward Bending Moment (Heel)	4.57 k-ft	-0.44 k-ft	3.69 k-ft	2.97 k-ft
Net Upward Shear (Heel)	3.39 k	0.31 k	3.03 k	2.31 k
Upward Bending Moment (Toe)	2.621 k-ft	2.51 k-ft	3.052 k-ft	2.084 k-ft
Upward Shear (Toe)	5.23 k	4.94 k	6.06 k	4.15 k
Footing Design Forces:	**Upward Mu = 4.57 k-ft**	**Upward Ma = 2.97 k-ft**	**Up. Shear Vu = 6.06 k**	

DELTA
ENGINEERS, ARCHITECTS, & LAND SURVEYORS
860 Hooper Road, Endwell, NY 13760
www.deltaengineers.com
Phone: (607) 231-6600
Fax: (607) 231-6650

JOB	2014.059.004
DESCIPTION	28'x10' Arch Footing 2 - Min. Live Load
SHEET NO	____ OF ____ SCALE ____
CALCULATED BY	YL DATE 3/21/2014
CHECKED BY	SLN DATE 3/24/14

Stem and Footing Design Forces - Stablilty about Toe - Prior to Structure Placement

Footing Width	6 ft
Toe width	1 ft
Heel Width	2.75 ft
Overburned Ht over Heel	5 ft

Limit States

Factor	Str-1a	Str-1b	Str-IV	Serv
DC	1.25	0.90	1.50	1.00
DW	1.50	0.65	1.50	1.00
EH	1.50	1.50	1.50	1.00
EV	1.35	1.00	1.35	1.00
LL	1.75	1.75	0.00	1.00
LS	1.75	1.75	0.00	1.00

Note: Inward forces are positive, negative moment indicates inside face in tension.

							Str-1a		Str-1b		Str-IV		Service	
Dir	Factor	Force		Arm ft			F kips	M k-ft	F kips	M k-ft	F kips	M k-ft	F kips	M k-ft
H	DC	0	x	5	=		0.00	0.00	0.00	0.00	0.00	0	0.00	0
H	DW	0	x	5	=		0.00	0.00	0.00	0.00	0.00	0	0.00	0
H	EH	0	x	5	=		0.00	0.00	0.00	0.00	0.00	0	0.00	0
H	EV	0	x	5	=		0.00	0.00	0.00	0.00	0.00	0	0.00	0
H	LL	0	x	5	=		0.00	0.00	0.00	0.00	0.00	0	0.00	0
H	EH	0	x	2.5	=		0.00	0.00	0.00	0.00	0.00	0	0.00	0
H	EH	0.495	x	1.667	=		0.74	1.24	0.74	1.24	0.74	1.237	0.49	0.825
H	LS	1.484	x	2.5	=		2.60	6.49	2.60	6.49	0.00	0	1.48	3.711
Totals							3.34	7.73	3.34	7.73	0.74	1.24	1.98	4.54

Stem Design Forces: **Mu = 7.73 k-ft** **Ma = 4.54 k-ft** **Vu = 3.34 k**

FTG.

Downward Overburden Moment (Heel)	-3.57 k-ft	-2.65 k-ft	-3.57 k-ft	-2.65 k-ft
Downward Overburden Shear (Heel)	-2.60 k	-1.93 k	-2.60 k	-1.93 k

Footing Design Forces: **Downward Mu = -3.57 k-ft** **Down. Ma = -2.65 k-ft** **Up. Shear Vu = -2.60 k**

DELTA
ENGINEERS, ARCHITECTS, & LAND SURVEYORS
860 Hooper Road, Endwell, NY 13760
www.deltaengineers.com
Phone: (607) 231-6600
Fax: (607) 231-6650

JOB	2014.059.004		
DESCIPTION	28'x10' Arch Footing 2 - Min. Live Load		
SHEET NO	OF	SCALE	
CALCULATED BY	YL	DATE	5/20/2014
CHECKED BY	RA	DATE	5-20-14

Stem Inside Face Reinforcing Design

Limit State: Strength

MATERIAL PROPERTIES:

1 Concrete Strength, F'c	5	ksi
2 Reinforcing Steel Yield, Fy	60	ksi
3 Concrete Unit Weight	150	pcf
4 Soil Unit Weight	140	pcf

Member Design Width b =	12.00	in
Member Thickness Ts =	27.00	in
Bar Cover =	3.00	in
Bar Size =	6	
de=Ts-Cov-Bar Size/2 =	23.63	in

Ec = 57000 * √f'c = 4031 ksi

Es = 29000 ksi

n = Es / Ec = 7.20

0.65 < β1 < 0.85 = 0.80

$$\rho_b = \frac{0.85\beta_1 \bullet f'c}{f_y} \bullet \left[\frac{87{,}000}{87{,}000 + f_y}\right] = 0.0335$$

fr = .37 * √f'c = 0.83 ksi

Unfactored Moment, Ma =	18.05	kip-ft
Design Ultimate Moment, Mu =	32.25	kip-ft
Ultimate Shear, Vu =	4.99	kips

Capacity Reduction Factors

Moment, ΦM =	0.9
Shear, ΦV =	0.9

dv = Greater of .72h or 0.9 de = 21.263 in

β = 2.0

Vc=ϕ(0.0316)β√f'c*b*dv= 32.45 kips/ft **> 2Vu OK**

$$\rho = \left[1 - \left(\sqrt{1 - \frac{2 \bullet M_u}{\phi b d^2 \bullet .85 f'c}}\right)\right] \bullet \frac{.85 f'c}{f_y} = 0.00108$$

Steel Area Req'd; As =ρ * b * d = 0.3057 in^2/ft

Use #6 Bar @ 7.00 in oc

As Prov = 0.76 in^2/ft

ρ Prov = 0.00267 **OK**

Check Min As > 1.33 AsReq **OK**

φMn = φAsfy(de-a/2)/12 = 78.997 kip-ft **OK**

c=As*Fy/.85*f'c*β1*b = 1.1137 in

c/de ≤ 0.6; c/de = 0.0471 OK

a = β_1c = 0.891 in

Ig = $bt^3/12$ = 19683 in^4

y_t = T/2 = 13.50 in

Mcr = fr*(Ig / yt) = 100.52 kip-ft

1.2Mcr= 120.63 kip-ft

CHECK CRACKING

$$k = \sqrt{2\rho n + \rho n^2} - \rho n = 0.1778$$

j = 1 - (k/3) = 0.941

fs = Ma/(As*j*d) = 12.87 ksi

max spa ≤ [(700γe) / (βsfs)] - 2dc = 36 in

dc= 2.38 in

Bs=1+dc/(0.7*(h-dc))= 1.1378

γe= 0.75

DELTA
ENGINEERS, ARCHITECTS, & LAND SURVEYORS
860 Hooper Road, Endwell, NY 13760
www.deltaengineers.com
Phone: (607) 231-6600
Fax: (607) 231-6650

JOB	2014.059.004		
DESCIPTION	28'x10' Arch Footing 2 - Min. Live Load		
SHEET NO	OF	SCALE	
CALCULATED BY	YL	DATE	5/20/2014
CHECKED BY	RA	DATE	5-20-14

Stem Outside Face Reinforcing Design

Limit State: Strength

MATERIAL PROPERTIES:

1 Concrete Strength, F'c	5	ksi
2 Reinforcing Steel Yield, Fy	60	ksi
3 Concrete Unit Weight	150	pcf
4 Soil Unit Weight	140	pcf

Member Design Width b =	12.00	in
Member Thickness Ts =	27.00	in
Bar Cover =	3.00	in
Bar Size =	4	
de=Ts-Cov-Bar Size/2 =	23.75	in

Ec = 57000 * √f'c = 4031 ksi

Es = 29000 ksi

n = Es / Ec = 7.20

0.65 < β1 < 0.85 = 0.80

$$\rho_b = \frac{0.85\beta_1 \bullet f'c}{f_y} \bullet \left[\frac{87{,}000}{87{,}000 + f_y}\right] = 0.0335$$

fr = .37 * √f'c = 0.83 ksi

Unfactored Moment, Ma =	4.54	kip-ft
Design Ultimate Moment, Mu =	7.73	kip-ft
Ultimate Shear, Vu =	3.34	kips

Capacity Reduction Factors

Moment, ΦM =	0.9
Shear, ΦV =	0.9

dv = Greater of .72h or 0.9 de = 21.375 in

β = 2.0

Vc=ϕ(0.0316)β√f'c*b*dv= 32.62 kips/ft **> 2Vu OK**

$$\rho = \left[1 - \left(\sqrt{1 - \frac{2 \bullet M_u}{\phi b d^2 \bullet .85 f'c}}\right)\right] \bullet \frac{.85 f'c}{f_y} = 0.00025$$

Steel Area Req'd; As =ρ * b * d = 0.0725 in^2/ft

Use #4 Bar @ 12.00 in oc

As Prov = 0.20 in^2/ft

ρ Prov = 0.00069 **OK**

Check Min As > 1.33 AsReq **OK**

φMn = φAsfy(de-a/2)/12 = 20.883 kip-ft **OK**

c=As*Fy/.85*f'c*β1*b = 0.28875 in

c/de ≤ 0.6; c/de = 0.01216 OK

a = β_1c = 0.231 in

Ig = $bt^3/12$ = 19683 in^4

y_t = T/2 = 13.50 in

Mcr = fr*(Ig / yt) = 100.52 kip-ft

1.2Mcr= 120.63 kip-ft

CHECK CRACKING

$$k = \sqrt{2\rho n + \rho n^2} - \rho n = 0.0947$$

j = 1 - (k/3) = 0.968

fs = Ma/(As*j*d) = 12.051 ksi

max spa ≤ [(700γe) / (βsfs)] - 2dc = 39 in

dc= 2.25 in

Bs=1+dc/(0.7*(h-dc))= 1.12987

γe= 0.75

DELTA
ENGINEERS, ARCHITECTS, & LAND SURVEYORS
860 Hooper Road, Endwell, NY 13760
www.deltaengineers.com
Phone: (607) 231-6600
Fax: (607) 231-6650

JOB	2014.059.004		213
DESCIPTION	28'x10' Arch Footing 2 - Min. Live Load		
SHEET NO	OF	SCALE	
CALCULATED BY	YL	DATE	5/20/2014
CHECKED BY	RA	DATE	5-20-14

Footing Bottom Reinforcing design

Limit State: Strength

MATERIAL PROPERTIES:

1 Concrete Strength, F'c	5	ksi
2 Reinforcing Steel Yield, Fy	60	ksi
3 Concrete Unit Weight	150	pcf
4 Soil Unit Weight	140	pcf

Member Design Width b = 12.00 in

Member Thickness Ts = 20.00 in (3" Keyway)

Bar Cover = 3.00 in

Bar Size = 6

de=Ts-Cov-Bar Size/2 = 16.63 in

Ec = 57000 * √f'c = 4031 ksi

Es = 29000 ksi

n = Es / Ec = 7.20

0.65 < β1 < 0.85 = 0.80

$$\rho_b = \frac{0.85\beta_1 \bullet f'c}{f_y} \bullet \left[\frac{87{,}000}{87{,}000 + f_y}\right] = 0.0335$$

fr = .37 * √f'c = 0.83 ksi

Unfactored Moment, Ma = 13.68 kip-ft

Design Ultimate Moment, Mu = 24.40 kip-ft

Ultimate Shear, Vu = 15.33 kips

Capacity Reduction Factors

Moment, ΦM = 0.9

Shear, ΦV = 0.9

dv = Greater of .72h or 0.9 de = 14.96 in

β = 2.0

Vc=ϕ(0.0316)β√f'c*b*dv= 22.84 kips/ft **> Vu OK**

$$\rho = \left[1 - \left(\sqrt{1 - \frac{2 \bullet M_u}{\phi b d^2 \bullet .85 f'c}}\right)\right] \bullet \frac{.85 f'c}{f_y} = 0.00165$$

Steel Area Req'd; As =ρ * b * d = 0.33 in^2/ft

Use #6 Bar @ 7.00 in oc

As Prov = 0.76 in^2/ft

ρ Prov = 0.00380 **OK**

Check Min As > 1.33 AsReq **OK**

φMn = φAsfy(de-a/2)/12 = 55.14 kip-ft **OK**

c=As*Fy/.85*f'c*β1*b = 1.114 in

c/de ≤ 0.42; c/de = 0.067 OK

a = β_1c = 0.891 in

Ig = $bt^3/12$ = 8000 in^4

y_t = T/2 = 10.00 in

Mcr = fr*(Ig / yt) = 55.16 kip-ft

1.2Mcr= 66.19 kip-ft

CHECK CRACKING

$$k = \sqrt{2\rho n + \rho n^2} - \rho n = 0.208$$

j = 1 - (k/3) = 0.931

fs = Ma/(As*j*d) = 14.01 ksi

max spa ≤ [(700γe) / (βsfs)] - 2dc = 31 in

dc= 2.38 in

Bs=1+dc/(0.7*(h-dc))= 1.193

γe= 0.75

DELTA
ENGINEERS, ARCHITECTS, & LAND SURVEYORS
860 Hooper Road, Endwell, NY 13760
www.deltaengineers.com
Phone: (607) 231-6600
Fax: (607) 231-6650

JOB	2014.059.004		
DESCIPTION	28'x10' Arch Footing 2 - Min. Live Load		
SHEET NO	OF	SCALE	
CALCULATED BY	YL	DATE	5/20/2014
CHECKED BY	RA	DATE	5-20-14

Footing Top Reinforcing design

Limit State: Strength

MATERIAL PROPERTIES:

1 Concrete Strength, F'c	5	ksi	
2 Reinforcing Steel Yield, Fy	60	ksi	
3 Concrete Unit Weight	150	pcf	
4 Soil Unit Weight	140	pcf	

Member Design Width b =	12.00	in	
Member Thickness Ts =	20.00	in	(3" Keyway)
Bar Cover =	3.00	in	
Bar Size =	4		
de=Ts-Cov-Bar Size/2 =	16.75	in	

Ec = 57000 * √f'c = 4031 ksi

Es = 29000 ksi

n = Es / Ec = 7.20

0.65 < β1 < 0.85 = 0.80

$$\rho_b = \frac{0.85\beta_1 \bullet f'c}{f_y} \bullet \left[\frac{87{,}000}{87{,}000 + f_y}\right] = 0.0335$$

fr = .37 * √f'c = 0.83 ksi

Unfactored Moment, Ma =	2.65	kip-ft
Design Ultimate Moment, Mu =	3.57	kip-ft
Ultimate Shear, Vu =	2.60	kips

Capacity Reduction Factors

Moment, ΦM =	0.9
Shear, ΦV =	0.9

dv = Greater of .72h or 0.9 de = 15.08 in

β = 2.0

Vc=ϕ(0.0316)β√f'c*b*dv= 23.01 kips/ft **> Vu OK**

$$\rho = \left[1 - \left(\sqrt{1 - \frac{2 \bullet M_u}{\phi b d^2 \bullet .85 f'c}}\right)\right] \bullet \frac{.85 f'c}{f_y} = 0.00024$$

Steel Area Req'd; As =ρ * b * d = 0.047 in^2/ft

Use #4 Bar @ 12.00 in oc

As Prov = 0.20 in^2/ft

ρ Prov = 0.00098 **OK**

Check Min As > 1.33 AsReq **OK**

φMn = φAsfy(de-a/2)/12 = 14.7 kip-ft **OK**

c=As*Fy/.85*f'c*β1*b = 0.289 in

c/de ≤ 0.42; c/de = 0.017 OK

a = β_1c = 0.231 in

Ig = $bt^3/12$ = 8000 in^4

y_t = T/2 = 10.00 in

Mcr = fr*(Ig / yt) = 55.16 kip-ft

1.2Mcr= 66.19 kip-ft

CHECK CRACKING

$$k = \sqrt{2\rho n + \rho n^2} - \rho n = 0.112$$

j = 1 - (k/3) = 0.963

fs = Ma/(As*j*d) = 10.03 ksi

max spa ≤ [(700γe) / (βsfs)] - 2dc = 44 in

dc= 2.25 in

Bs=1+dc/(0.7*(h-dc))= 1.181

γe= 0.75

DELTA
ENGINEERS, ARCHITECTS, & LAND SURVEYORS
860 Hooper Road, Endwell, NY 13760
www.deltaengineers.com
Phone: (607) 231-6600
Fax: (607) 231-6650

JOB	2014.059.004		
DESCIPTION	28'x10' Arch Footing 2 - Max. Live Load		
SHEET NO	OF	SCALE	
CALCULATED BY	YL	DATE	3/21/2014
CHECKED BY	SLU	DATE	3/24/14

Structure Geometry

Toe Width	1	ft	Stem Height	5	ft	Backfill Soil (phi)	34 deg
Wall Width	12	in	Footing Thickness	1.917	ft	Soil Weight	140 pcf
Stem Width	2.25	ft	Fill Height	2	ft	Ka =	0.2827
Heel Width	2.75	ft	Structure Height	11.08	ft	LL Surcharge	3 ft
Footing Width	6	ft				Allowable Factored Brg Res.	14.1ksf

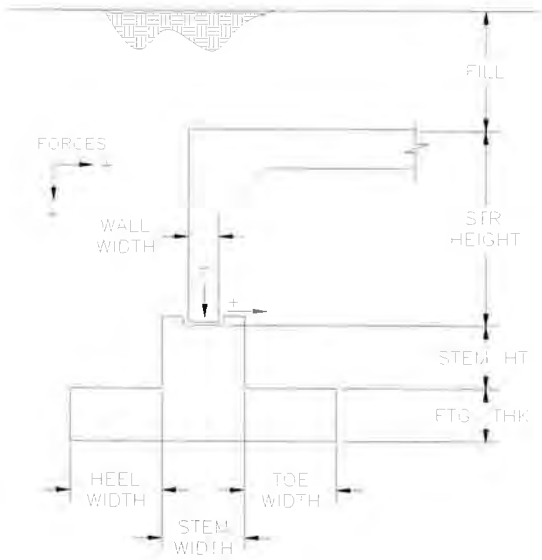

(Note: A Stem Ht. of Zero indicates a strip footing, not a pedestal footing as shown)

Pedestal Footing

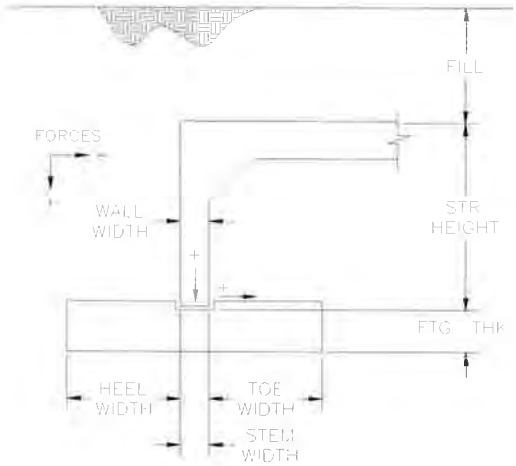

(Note: Ensure Stem Width equals Wall Width and Stem Ht. equals Zero when designing a strip footing)

Strip Footing

DELTA
ENGINEERS, ARCHITECTS, & LAND SURVEYORS
860 Hooper Road, Endwell, NY 13760
www.deltaengineers.com
Phone: (607) 231-6600
Fax: (607) 231-6650

JOB	2014.059.004		
DESCIPTION	28'x10' Arch Footing 2 - Max. Live Load		
SHEET NO	OF	SCALE	
CALCULATED BY	YL	DATE	3/21/2014
CHECKED BY	SLJ	DATE	3/24/14

Final Condition with Live Load Effects - Sum Forces and Moments About "Heel"

Toe Width	1	ft
Wall Width	12	in
Stem Width	2.25	ft
Heel Width	2.75	ft
Footing Width	6	ft
Stem Height	5	ft
Footing Thickness	1.917	ft
Fill Height	2	ft
Structure Height	11.08	ft

Backfill Soil (phi) 34 deg

Soil Weight 140 pcf

Ka = 0.283

Limit States

Factor	Str-1a	Str-1b	Str IV	Serv
DC	1.25	0.90	1.50	1.00
DW	1.50	0.65	1.50	1.00
EH	0.90	0.90	0.90	1.00
EV	1.35	1.00	1.35	1.00
LL	1.75	1.75	0.00	1.00
LS	0.00	0.00	0.00	1.00

Resistance Factors

Sliding	0.9
Bearing	0.45
Moment	0.9
Shear	0.9

Factored Bearing Resistance 14.1ksf

Note: Downward and inward forces are positive

		Dir	Factor	Force		Arm ft		Str-1a F kips	Str-1a M k-ft	Str-1b F kips	Str-1b M k-ft	Str IV F kips	Str IV M k-ft	Str IV F kips	Str IV M k-ft
Structure Reaction		V	DC	3.49	x	3.88	=	4.36	16.90	3.14	12.17	5.24	20.29	3.49	13.52
		V	DW	0.57	x	3.88	=	0.86	3.31	0.37	1.44	0.86	3.31	0.57	2.21
		V	EH	0	x	3.88	=	0.00	0.00	0.00	0.00	0.00	0.00	0.00	0.00
		V	EV	7.53	x	3.88	=	10.17	39.39	7.53	29.2	10.17	39.39	7.53	29.18
		V	LL	10.87	x	3.88	=	19.02	73.71	19.02	73.71	0.00	0.00	10.87	42.12
		H	DC	-1.14	x	6.92	=	-1.43	-9.86	-1.03	-7.10	-1.71	-11.83	-1.14	-7.89
		H	DW	-0.18	x	6.92	=	-0.27	-1.87	-0.12	-0.81	-0.27	-1.87	-0.18	-1.25
		H	EH	0.29	x	6.92	=	0.26	1.81	0.26	1.81	0.26	1.81	0.29	2.01
		H	EV	-1.85	x	6.92	=	-2.50	-17.28	-1.85	-12.80	-2.50	-17.28	-1.85	-12.80
		H	LL	-4.7	x	6.92	=	-8.23	-56.89	-8.23	-56.89	0.00	0.00	-4.70	-32.51
		H	LS	0	x	6.92	=	0.00	0.00	0.00	0.00	0.00	0.00	0.00	0.00
Soil Above Heel		V	EV	6.962	x	1.38	=	9.40	12.92	6.96	9.57	9.40	12.92	6.96	9.57
Soil Above Stem		V	EV	1.14	x	3.06	=	1.55	4.73	1.14	3.51	1.55	4.73	1.14	3.51
EH from Soil Above		H	EH	3.582	x	3.46	=	3.22	11.15	3.22	11.15	3.22	11.15	3.58	12.39
EH on Stem FTG		H	EH	0.947	x	2.31	=	0.85	1.96	0.85	1.96	0.85	1.96	0.95	2.18
Stem Weight		V	DC	1.688	x	3.88	=	2.11	8.17	1.52	5.89	2.53	9.81	1.69	6.54
Ftg Weight		V	DC	1.725	x	3.00	=	2.16	6.47	1.55	4.66	2.59	7.76	1.73	5.18
Totals									94.65		77.44		82.17		73.97

	Str-1a	Str-1b	Str IV	Str IV
Total Vertical	49.62	41.24	32.32	33.98
Net Horizontal	-8.08	-6.88	-0.14	-3.05
Resultant Loacation	1.91 ft	1.88 ft	2.54 ft	2.18 ft
Eccentricity	1.09 ft	1.12 ft	0.46 ft	0.82 ft
bf'	3.82 ft	3.76 ft	5.08 ft	4.35 ft
Bearing Pressure	13.00 ksf	10.98 ksf	6.36 ksf	7.80 ksf
Eccentricity within middle half	YES	YES	YES	YES
Sliding Resistance	24.10 kips	20.03 kips	15.70 kips	16.50

DELTA
ENGINEERS, ARCHITECTS, & LAND SURVEYORS
860 Hooper Road, Endwell, NY 13760
www.deltaengineers.com
Phone: (607) 231-6600
Fax: (607) 231-6650

JOB	2014.059.004		
DESCIPTION	28'x10' Arch Footing 2 - Max. Live Load		
SHEET NO	OF	SCALE	
CALCULATED BY	YL	DATE	3/21/2014
CHECKED BY	SLV	DATE	3/24/14

Final Condition without Live Load Effects - Sum Forces and Moments About "Heel"

Toe Width	1	ft	Backfill Soil (phi)	34	deg	Soil Weight 140 pcf
Wall Width	12	in				Ka = 0.283
Stem Width	2.25	ft				
Heel Width	2.75	ft				
Footing Width	6	ft				
Stem Height	5	ft				
Footing Thickness	1.917	ft				
Fill Height	2	ft				
Structure Height	11.08	ft				

Limit States

Factor	Str-1a	Str-1b	Str IV	Serv
DC	1.25	0.90	1.50	1.00
DW	1.50	0.65	1.50	1.00
EH	0.90	0.90	0.90	1.00
EV	1.35	1.00	1.35	1.00
LL	1.75	1.75	0.00	1.00
LS	0.00	0.00	0.00	1.00

Resistance Factors

Sliding	0.9
Bearing	0.45
Moment	0.9
Shear	0.9

Factored Bearing Resistance 14.1ksf

Note: Downward and inward forces are positive

		Dir	Factor	Force		Arm ft		Str-1a F kips	Str-1a M k-ft	Str-1b F kips	Str-1b M k-ft	Str IV F kips	Str IV M k-ft	Str IV F kips	Str IV M k-ft
Structure Reaction		V	DC	3.49	x	3.88	=	4.36	16.90	3.14	12.17	5.24	20.29	3.49	13.52
		V	DW	0.57	x	3.88	=	0.86	3.31	0.37	1.44	0.86	3.31	0.57	2.21
		V	EH	0	x	3.88	=	0.00	0.00	0.00	0.00	0.00	0.00	0.00	0.00
		V	EV	7.53	x	3.88	=	10.17	39.39	7.53	29.2	10.17	39.39	7.53	29.18
		V	LL	0	x	3.88	=	0.00	0.00	0.00	0.00	0.00	0.00	0.00	0.00
		H	DC	-1.14	x	6.92	=	-1.43	-9.86	-1.03	-7.10	-1.71	-11.83	-1.14	-7.89
		H	DW	-0.18	x	6.92	=	-0.27	-1.87	-0.12	-0.81	-0.27	-1.87	-0.18	-1.25
		H	EH	0.29	x	6.92	=	0.26	1.81	0.26	1.81	0.26	1.81	0.29	2.01
		H	EV	-1.85	x	6.92	=	-2.50	-17.28	-1.85	-12.80	-2.50	-17.28	-1.85	-12.80
		H	LL	0	x	6.92	=	0.00	0.00	0.00	0.00	0.00	0.00	0.00	0.00
		H	LS	0	x	6.92	=	0.00	0.00	0.00	0.00	0.00	0.00	0.00	0.00
Soil Above Heel		V	EV	6.962	x	1.38	=	9.40	12.92	6.96	9.57	9.40	12.92	6.96	9.57
Soil Above Stem		V	EV	1.14	x	3.06	=	1.55	4.73	1.14	3.51	1.55	4.73	1.14	3.51
EH from Soil Above		H	EH	3.582	x	3.46	=	3.22	11.15	3.22	11.15	3.22	11.15	3.58	12.39
EH on Stem FTG		H	EH	0.947	x	2.31	=	0.85	1.96	0.85	1.96	0.85	1.96	0.95	2.18
Stem Weight		V	DC	1.688	x	3.88	=	2.11	8.17	1.52	5.89	2.53	9.81	1.69	6.54
Ftg Weight		V	DC	1.725	x	3.00	=	2.16	6.47	1.55	4.66	2.59	7.76	1.73	5.18
Totals									77.83		60.62		82.17		64.35
Total Vertical								30.59		22.22		32.32		23.11	
Net Horizontal								0.14		1.34		-0.14		1.65	
Resultant Loacation								2.54 ft		2.73 ft		2.54 ft		2.78 ft	
Eccentricity								0.46 ft		0.27 ft		0.46 ft		0.22 ft	
bf'								5.09 ft		5.46 ft		5.08 ft		5.57 ft	
Bearing Pressure								6.01 ksf		4.07 ksf		6.36 ksf		4.15 ksf	
Eccentricity within middle half								YES		YES		YES		YES	
Sliding Resistance								14.86 kips		10.79 kips		15.70 kips		11.22	

DELTA
ENGINEERS, ARCHITECTS, & LAND SURVEYORS
860 Hooper Road, Endwell, NY 13760
www.deltaengineers.com
Phone: (607) 231-6600
Fax: (607) 231-6650

JOB	2014.059.004
DESCIPTION	28'x10' Arch Footing 2 - Max. Live Load
SHEET NO	OF SCALE
CALCULATED BY	YL DATE 3/21/2014
CHECKED BY	SLJ DATE 3/24/14

Stem and Footing Design Forces - Stablilty about Heel

Footing Width	6	ft
Toe width	1	ft
Heel Width	2.75	ft
Footing Thickness	1.917	ft
Overburden Ht over Heel	18.08	ft

Limit States

Factor	Str-1a	Str-1b	Str-IV	Serv
DC	1.25	0.90	1.50	1.00
DW	1.50	0.65	1.50	1.00
EH	0.90	0.90	0.90	1.00
EV	1.35	1.00	1.35	1.00
LL	1.75	1.75	0.00	1.00
LS	0.00	0.00	0.00	1.00

Note: Inward forces are positive, negative moment indicates inside face in tension.

Dir	Factor	Force		Arm ft		Str-1a F kips	Str-1a M k-ft	Str-1b F kips	Str-1b M k-ft	Str-IV F kips	Str-IV M k-ft	Service F kips	Service M k-ft
H	DC	-1.14	x	5	=	-1.43	-7.13	-1.03	-5.13	-1.71	-8.55	-1.14	-5.7
H	DW	-0.18	x	5	=	-0.27	-1.35	-0.12	-0.59	-0.27	-1.35	-0.18	-0.9
H	EH	0.29	x	5	=	0.26	1.31	0.26	1.31	0.26	1.305	0.29	1.45
H	EV	-1.85	x	5	=	-2.50	-12.49	-1.85	-9.25	-2.50	-12.5	-1.85	-9.25
H	LL	-4.7	x	5	=	-8.23	-41.13	-8.23	-41.13	0.00	0	-4.70	-23.5
H	LS	0	x	5	=	0.00	0.00	0.00	0.00	0.00	0	0.00	0
H	EH	2.589	x	2.5	=	2.33	5.83	2.33	5.83	2.33	5.826	2.59	6.473
H	EH	0.495	x	1.667	=	0.45	0.74	0.45	0.74	0.45	0.742	0.49	0.825
Totals						-9.38	-54.21	-8.18	-48.22	-1.44	-14.51	-4.50	-30.60

Stem Design Forces: **Mu = -54.21 k-ft** **Ma = -30.60 k-ft** **Vu = -9.38 k**

	Str-1a	Str-1b	Str-IV	Service
FTG: B =	6 ft	6 ft	6 ft	6 ft
B/6 =	1 ft	1 ft	1 ft	1 ft
e =	1.092 ft	1.122 ft	0.458 ft	0.823 ft
Total Vertical =	49.62 k	41.24 k	32.32 k	33.98 k
Pressure @ P1 (Toe)	0.00 psf	0.00 psf	2.92 psf	1.00 psf
Pressure @ P2 (Heel)	17.34 psf	14.64 psf	7.85 psf	10.33 psf
Pressure @ FF Stem (Toe)	2.89 psf	2.44 psf	3.74 psf	2.56 psf
Pressure @ RF Stem (Heel)	9.39 psf	7.93 psf	5.59 psf	6.05 psf
Upward Bending Moment (Heel)	55.55 k-ft	46.91 k-ft	26.84 k-ft	33.66 k-ft
Upward Shear (Heel)	36.76 k	31.04 k	18.48 k	22.52 k
Downward Overburden Moment (Heel)	-12.92 k-ft	-9.57 k-ft	-12.92 k-ft	-9.57 k-ft
Downward Overburden Shear (Heel)	-9.40 k	-6.96 k	-9.40 k	-6.96 k
Downward Heel Weight Moment (Heel)	-1.36 k-ft	-0.98 k-ft	-1.63 k-ft	-1.09 k-ft
Downward Heel Weight Shear (Heel)	-0.99 k	-0.71 k	-1.19 k	-0.79 k
Net Upward Bending Moment (Heel)	41.27 k-ft	36.36 k-ft	12.29 k-ft	23.00 k-ft
Net Upward Shear (Heel)	26.37 k	23.36 k	7.90 k	14.77 k
Upward Bending Moment (Toe)	0.4816 k-ft	0.4067 k-ft	1.598 k-ft	0.76 k-ft
Upward Shear (Toe)	1.44 k	1.22 k	3.33 k	1.78 k

Footing Design Forces: **Upward Mu = 41.27 k-ft** **Upward Ma = 23.00 k-ft** **Up. Shear Vu = 26.37 k**

DELTA
ENGINEERS, ARCHITECTS, & LAND SURVEYORS
860 Hooper Road, Endwell, NY 13760
www.deltaengineers.com
Phone: (607) 231-6600
Fax: (607) 231-6650

JOB	2014.059.004		
DESCIPTION	28'x10' Arch Footing 2 - Max. Live Load		
SHEET NO	OF	SCALE	
CALCULATED BY	YL	DATE	3/21/2014
CHECKED BY	SLV	DATE	3/24/14

Stem and Footing Design Forces - Stablilty about Heel - structure without live load reaction

Footing Width	6	ft
Toe width	1	ft
Heel Width	2.75	ft
Footing Thickness	1.917	ft
Overburned Ht over Heel	18.08	ft

Limit States

Factor	Str-1a	Str-1b	Str-IV	Serv
DC	1.25	0.90	1.50	1.00
DW	1.50	0.65	1.50	1.00
EH	0.90	0.90	0.90	1.00
EV	1.35	1.00	1.35	1.00
LL	1.75	1.75	0.00	1.00
LS	0.00	0.00	0.00	1.00

Note: Inward forces are positive, negative moment indicates inside face in tension.

Dir	Factor	Force		Arm ft		Str-1a F kips	Str-1a M k-ft	Str-1b F kips	Str-1b M k-ft	Str-IV F kips	Str-IV M k-ft	Service F kips	Service M k-ft
H	DC	-1.14	x	5	=	-1.43	-7.13	-1.03	-5.13	-1.71	-8.55	-1.14	-5.7
H	DW	-0.18	x	5	=	-0.27	-1.35	-0.12	-0.59	-0.27	-1.35	-0.18	-0.9
H	EH	0.29	x	5	=	0.26	1.31	0.26	1.31	0.26	1.305	0.29	1.45
H	EV	-1.85	x	5	=	-2.50	-12.49	-1.85	-9.25	-2.50	-12.5	-1.85	-9.25
H	LL	0	x	5	=	0.00	0.00	0.00	0.00	0.00	0	0.00	0
H	LS	0	x	5	=	0.00	0.00	0.00	0.00	0.00	0	0.00	0
H	EH	2.589	x	2.5	=	2.33	5.83	2.33	5.83	2.33	5.826	2.59	6.473
H	EH	0.495	x	1.667	=	0.45	0.74	0.45	0.74	0.45	0.742	0.49	0.825
Totals						-1.16	-13.09	0.04	-7.09	-1.44	-14.51	0.20	-7.10

Stem Design Forces: **Mu = -14.51 k-ft** **Ma = -7.10 k-ft** **Vu = -1.44 k**

FTG. B =	6 ft	6 ft	6 ft	6 ft
B/6 =	1 ft	1 ft	1 ft	1 ft
e =	0.456 ft	0.272 ft	0.458 ft	0.215 ft
Total Vertical =	30.59 k	22.22 k	32.32 k	23.11 k
Pressure @ P1 (Toe)	2.77 psf	2.70 psf	2.92 psf	3.02 psf
Pressure @ P2 (Heel)	7.42 psf	4.71 psf	7.85 psf	4.68 psf
Pressure @ FF Stem (Toe)	3.55 psf	3.03 psf	3.74 psf	3.30 psf
Pressure @ RF Stem (Heel)	5.29 psf	3.79 psf	5.59 psf	3.92 psf
Upward Bending Moment (Heel)	25.39 k-ft	16.64 k-ft	26.84 k-ft	16.74 k-ft
Upward Shear (Heel)	17.49 k	11.68 k	18.48 k	11.83 k
Downward Overburden Moment (Heel	-12.92 k-ft	-9.57 k-ft	-12.92 k-ft	-9.57 k-ft
Downward Overburden Shear (Heel)	-9.40 k	-6.96 k	-9.40 k	-6.96 k
Downward Heel Weight Moment (Hee	-1.36 k-ft	-0.98 k-ft	-1.63 k-ft	-1.09 k-ft
Downward Heel Weight Shear (Heel)	-0.99 k	-0.71 k	-1.19 k	-0.79 k
Net Upward Bending Moment (Heel)	11.10 k-ft	6.09 k-ft	12.29 k-ft	6.08 k-ft
Net Upward Shear (Heel)	7.10 k	4.01 k	7.90 k	4.07 k
Upward Bending Moment (Toe)	1.516 k-ft	1.405 k-ft	1.598 k-ft	1.557 k-ft
Upward Shear (Toe)	3.16 k	2.87 k	3.33 k	3.16 k

Footing Design Forces: **Upward Mu = 12.29 k-ft** **Upward Ma = 6.08 k-ft** **Up. Shear Vu = 7.90 k**

DELTA
ENGINEERS, ARCHITECTS, & LAND SURVEYORS
860 Hooper Road, Endwell, NY 13760
www.deltaengineers.com
Phone: (607) 231-6600
Fax: (607) 231-6650

JOB	2014.059.004		
DESCIPTION	28'x10' Arch Footing 2 - Max. Live Load		
SHEET NO	OF	SCALE	
CALCULATED BY	YL	DATE	3/21/2014
CHECKED BY	SLV	DATE	3/24/14

Final Condition with Live Load Effects - Sum Forces and Moments About "Toe"

Toe Width	1	ft	Backfill Soil (phi)	34	deg	Soil Weight 140 pcf
Wall Width	12	in				Ka = 0.28
Stem Width	2.25	ft				
Heel Width	2.75	ft				
Footing Width	6	ft				
Stem Height	5	ft				
Footing Thickness	1.917	ft				
Fill Height	2	ft				
Structure Height	11.08	ft				

Limit States

Factor	Str-1a	Str-1b	Str IV	Serv
DC	1.25	0.90	1.50	1.00
DW	1.50	0.65	1.50	1.00
EH	1.50	1.50	1.50	1.00
EV	1.35	1.00	1.35	1.00
LL	1.75	1.75	0.00	1.00
LS	1.75	1.75	0.00	1.00

Resistance Factors

Sliding	0.9
Bearing	0.45
Moment	0.9
Shear	0.9

Factored Bearing Resistance 14.1

LL Surcharge 3 ft

Note: Downward and outward forces are positive

		Dir	Factor	Force		Arm ft		Str-1a F kips	Str-1a M k-ft	Str-1b F kips	Str-1b M k-ft	Str IV F kips	Str IV M k-ft	Str IV F kips	Str IV M k-ft
Structure Reaction		V	DC	3.49	x	2.13	=	4.36	9.27	3.14	6.67	5.24	11.12	3.49	7.42
		V	DW	0.57	x	2.13	=	0.86	1.82	0.37	0.79	0.86	1.82	0.57	1.21
		V	EH	0	x	2.13	=	0.00	0.00	0.00	0.00	0.00	0.00	0.00	0.00
		V	EV	7.53	x	2.13	=	10.17	21.60	7.53	16.0	10.17	21.60	7.53	16.00
		V	LL	10.87	x	2.13	=	19.02	40.42	19.02	40.42	0.00	0.00	10.87	23.10
		H	DC	1.14	x	6.92	=	1.43	9.86	1.03	7.10	1.71	11.83	1.14	7.89
		H	DW	0.18	x	6.92	=	0.27	1.87	0.12	0.81	0.27	1.87	0.18	1.25
		H	EH	-0.29	x	6.92	=	-0.44	-3.01	-0.44	-3.01	-0.44	-3.01	-0.29	-2.01
		H	EV	1.85	x	6.92	=	2.50	17.28	1.85	12.80	2.50	17.28	1.85	12.80
		H	LL	4.7	x	6.92	=	8.23	56.89	8.23	56.89	0.00	0.00	4.70	32.51
		H	LS	0	x	6.92	=	0.00	0.00	0.00	0.00	0.00	0.00	0.00	0.00
Soil Above Heel		V	EV	6.962	x	4.63	=	9.40	43.47	6.96	32.20	9.40	43.47	6.96	32.20
Soil Above Stem		V	EV	1.14	x	2.94	=	1.55	4.54	1.14	3.36	1.55	4.54	1.14	3.36
EH from Soil Above		H	EH	-3.58	x	3.46	=	-5.37	-18.58	-5.37	-18.58	-5.37	-18.58	-3.58	-12.39
EH on Stem FTG		H	EH	-0.95	x	2.31	=	-1.42	-3.27	-1.42	-3.27	-1.42	-3.27	-0.95	-2.18
Stem Weight		V	DC	1.688	x	2.13	=	2.11	4.48	1.52	3.23	2.53	5.38	1.69	3.59
Ftg Weight		V	DC	1.725	x	3.00	=	2.16	6.47	1.55	4.66	2.59	7.76	1.73	5.18
LS on Stem FTG		H	LS	-0.82	x	3.46	=	-1.44	-4.97	-1.44	-4.97	0.00	0.00	-0.82	-2.84
Totals									188.13		155.09		101.80		127.07

	Str-1a	Str-1b	Str IV	Str IV
Total Vertical	49.62	41.24	32.32	33.98
Net Horizontal	3.75	2.55	-2.75	2.23
Resultant Loacation	3.79 ft	3.76 ft	3.15 ft	3.74 ft
Eccentricity	-0.79 ft	-0.76 ft	-0.15 ft	-0.74 ft
bf'	4.42 ft	4.48 ft	5.70 ft	4.52 ft
Bearing Pressure	11.23 ksf	9.21 ksf	5.67 ksf	7.52 ksf
Eccentricity within middle half	YES	YES	YES	YES
Sliding Resistance	24.10 kips	20.03 kips	15.70 kips	16.50

DELTA
ENGINEERS, ARCHITECTS, & LAND SURVEYORS
860 Hooper Road, Endwell, NY 13760
www.deltaengineers.com
Phone: (607) 231-6600
Fax: (607) 231-6650

JOB	2014.059.004		
DESCIPTION	28'x10' Arch Footing 2 - Max. Live Load		
SHEET NO	OF	SCALE	
CALCULATED BY	YL	DATE	3/21/2014
CHECKED BY	SLV	DATE	3/24/14

Final Condition without Live Load Effects - Sum Forces and Moments About "Toe"

Toe Width	1	ft	Backfill Soil (phi)	34	deg	Soil Weight 140 pcf
Wall Width	12	in				Ka = 0.283
Stem Width	2.25	ft				
Heel Width	2.75	ft				
Footing Width	6	ft				
Stem Height	5	ft				
Footing Thickness	1.917	ft				
Fill Height	2	ft				
Structure Height	11.08	ft				

Limit States

Factor	Str-1a	Str-1b	Str IV	Serv
DC	1.25	0.90	1.50	1.00
DW	1.50	0.65	1.50	1.00
EH	1.50	1.50	1.50	1.00
EV	1.35	1.00	1.35	1.00
LL	1.75	1.75	0.00	1.00
LS	1.75	1.75	0.00	1.00

Resistance Factors

Sliding	0.9
Bearing	0.45
Moment	0.9
Shear	0.9

Factored Bearing Resistance 14.1

Note: Downward and outward forces are positive

LL Surcharge 3 ft

		Dir	Factor	Force		Arm ft		Str-1a F kips	Str-1a M k-ft	Str-1b F kips	Str-1b M k-ft	Str IV F kips	Str IV M k-ft	Str IV F kips	Str IV M k-ft
Structure Reaction		V	DC	3.49	x	2.13	=	4.36	9.27	3.14	6.67	5.24	11.12	3.49	7.42
		V	DW	0.57	x	2.13	=	0.86	1.82	0.37	0.79	0.86	1.82	0.57	1.21
		V	EH	0	x	2.13	=	0.00	0.00	0.00	0.00	0.00	0.00	0.00	0.00
		V	EV	7.53	x	2.13	=	10.17	21.60	7.53	16.0	10.17	21.60	7.53	16.00
		V	LL	0	x	2.13	=	0.00	0.00	0.00	0.00	0.00	0.00	0.00	0.00
		H	DC	1.14	x	6.92	=	1.43	9.86	1.03	7.10	1.71	11.83	1.14	7.89
		H	DW	0.18	x	6.92	=	0.27	1.87	0.12	0.81	0.27	1.87	0.18	1.25
		H	EH	-0.29	x	6.92	=	-0.44	-3.01	-0.44	-3.01	-0.44	-3.01	-0.29	-2.01
		H	EV	1.85	x	6.92	=	2.50	17.28	1.85	12.80	2.50	17.28	1.85	12.80
		H	LL	0	x	6.92	=	0.00	0.00	0.00	0.00	0.00	0.00	0.00	0.00
		H	LS	0	x	6.92	=	0.00	0.00	0.00	0.00	0.00	0.00	0.00	0.00
Soil Above Heel		V	EV	6.962	x	4.63	=	9.40	43.47	6.96	32.20	9.40	43.47	6.96	32.20
Soil Above Stem		V	EV	1.14	x	2.94	=	1.55	4.54	1.14	3.36	1.55	4.54	1.14	3.36
EH from Soil Above		H	EH	-3.58	x	3.46	=	-5.37	-18.58	-5.37	-18.58	-5.37	-18.58	-3.58	-12.39
EH on Stem FTG		H	EH	-0.95	x	2.31	=	-1.42	-3.27	-1.42	-3.27	-1.42	-3.27	-0.95	-2.18
Stem Weight		V	DC	1.688	x	2.13	=	2.11	4.48	1.52	3.23	2.53	5.38	1.69	3.59
Ftg Weight		V	DC	1.725	x	3.00	=	2.16	6.47	1.55	4.66	2.59	7.76	1.73	5.18
LS on Stem FTG		H	LS	-0.82	x	3.46	=	-1.44	-4.97	-1.44	-4.97	0.00	0.00	-0.82	-2.84
Totals									90.81		57.78		101.80		71.46

	Str-1a	Str-1b	Str IV	Str IV
Total Vertical	30.59	22.22	32.32	23.11
Net Horizontal	-4.47	-5.67	-2.75	-2.47
Resultant Loacation	2.97 ft	2.60 ft	3.15 ft	3.09 ft
Eccentricity	0.03 ft	0.40 ft	0.15 ft	0.09 ft
bf'	5.94 ft	5.20 ft	5.70 ft	5.82 ft
Bearing Pressure	5.15 ksf	4.27 ksf	5.67 ksf	3.97 ksf
Eccentricity within middle half	YES	YES	YES	YES
Sliding Resistance	14.86 kips	10.79 kips	15.70 kips	11.22

DELTA
ENGINEERS, ARCHITECTS, & LAND SURVEYORS
860 Hooper Road, Endwell, NY 13760
www.deltaengineers.com
Phone: (607) 231-6600
Fax: (607) 231-6650

JOB	2014.059.004		
DESCIPTION	28'x10' Arch Footing 2 - Max. Live Load		
SHEET NO	OF	SCALE	
CALCULATED BY	YL	DATE	3/21/2014
CHECKED BY	SLV	DATE	3/24/14

Temporary Condition Prior to Structure Placement - Sum Forces and Moments About "Toe"

Toe Width	1	ft	Backfill Soil (phi)	34	deg	Soil Weight 140 pcf
Wall Width	12	in				Ka = 0.283
Stem Width	2.25	ft				
Heel Width	2.75	ft				
Footing Width	6	ft				
Stem Height	5	ft				
Footing Thickness	1.917	ft				
Fill Height	0	ft				
Structure Height	0	ft				

Limit States

Factor	Str-1a	Str-1b	Str IV	Serv
DC	1.25	0.90	1.50	1.00
DW	1.50	0.65	1.50	1.00
EH	1.50	1.50	1.50	1.00
EV	1.35	1.00	1.35	1.00
LL	1.75	1.75	0.00	1.00
LS	1.75	1.75	0.00	1.00

Resistance Factors

Sliding	0.9
Bearing	0.45
Moment	0.9
Shear	0.9

Factored Bearing Resistance 14.1ksf

Note: Downward and outward forces are positive

LL Surcharge 3 ft

		Dir	Factor	Force		Arm ft		Str-1a F kips	Str-1a M k-ft	Str-1b F kips	Str-1b M k-ft	Str IV F kips	Str IV M k-ft	Str IV F kips	Str IV M k-ft
Structure Reaction		V	DC	0	x	2.13	=	0.00	0.00	0.00	0.00	0.00	0.00	0.00	0.00
		V	DW	0	x	2.13	=	0.00	0.00	0.00	0.00	0.00	0.00	0.00	0.00
		V	EH	0	x	2.13	=	0.00	0.00	0.00	0.00	0.00	0.00	0.00	0.00
		V	EV	0	x	2.13	=	0.00	0.00	0.00	0.0	0.00	0.00	0.00	0.00
		V	LL	0	x	2.13	=	0.00	0.00	0.00	0.00	0.00	0.00	0.00	0.00
		H	DC	0	x	6.92	=	0.00	0.00	0.00	0.00	0.00	0.00	0.00	0.00
		H	DW	0	x	6.92	=	0.00	0.00	0.00	0.00	0.00	0.00	0.00	0.00
		H	EH	0	x	6.92	=	0.00	0.00	0.00	0.00	0.00	0.00	0.00	0.00
		H	EV	0	x	6.92	=	0.00	0.00	0.00	0.00	0.00	0.00	0.00	0.00
		H	LL	0	x	6.92	=	0.00	0.00	0.00	0.00	0.00	0.00	0.00	0.00
Soil Above Heel		V	EV	1.925	x	4.63	=	2.60	12.02	1.93	8.90	2.60	12.02	1.93	8.90
Soil Above Stem		V	EV	0.00	x	2.94	=	0.00	0.00	0.00	0.00	0.00	0.00	0.00	0.00
EH from Soil Above		H	EH	0	x	3.46	=	0.00	0.00	0.00	0.00	0.00	0.00	0.00	0.00
EH on Stem FTG		H	EH	-0.95	x	2.31	=	-1.42	-3.27	-1.42	-3.27	-1.42	-3.27	-0.95	-2.18
Stem Weight		V	DC	1.688	x	2.13	=	2.11	4.48	1.52	3.23	2.53	5.38	1.69	3.59
Ftg Weight		V	DC	1.725	x	3.00	=	2.16	6.47	1.55	4.66	2.59	7.76	1.73	5.18
LS on Stem FTG		H	LS	-0.82	x	3.46	=	-1.44	-4.97	-1.44	-4.97	0.00	0.00	-0.82	-2.84
Totals									14.73		8.54		21.89		12.64
Total Vertical								6.86		5.00		7.72		5.34	
Net Horizontal								-2.86		-2.86		-1.42		-1.77	
Resultant Loacation								2.15 ft		1.71 ft		2.84 ft		2.37 ft	
Eccentricity								0.85 ft		1.29 ft		0.16 ft		0.63 ft	
bf'								4.29 ft		3.42 ft		5.67 ft		4.74 ft	
Bearing Pressure								1.60 ksf		1.46 ksf		1.36 ksf		1.13 ksf	
Eccentricity within middle half								YES		YES		YES		YES	
Sliding Resistance								3.33 kips		2.43 kips		3.75 kips		2.59	

SAY OK BECAUSE OF #8 DOWELS

DELTA
ENGINEERS, ARCHITECTS, & LAND SURVEYORS
860 Hooper Road, Endwell, NY 13760
www.deltaengineers.com
Phone: (607) 231-6600
Fax: (607) 231-6650

JOB	2014.059.004
DESCIPTION	28'x10' Arch Footing 2 - Max. Live Load
SHEET NO.	OF SCALE
CALCULATED BY	YL DATE 3/21/2014
CHECKED BY	SLW DATE 3/24/14

Stem and Footing Design Forces - Stablilty about Toe

Footing Width	6	ft
Toe width	1	ft
Heel Width	2.75	ft
Footing Thickness	1.917	ft
Overburden Ht over Heel	18.08	ft

Limit States

Factor	Str-1a	Str-1b	Str-IV	Serv
DC	1.25	0.90	1.50	1.00
DW	1.50	0.65	1.50	1.00
EH	1.50	1.50	1.50	1.00
EV	1.35	1.00	1.35	1.00
LL	1.75	1.75	0.00	1.00
LS	1.75	1.75	0.00	1.00

Note: Inward forces are positive, negative moment indicates inside face in tension.

						Str-1a		Str-1b		Str-IV		Service	
Dir	Factor	Force		Arm ft		F kips	M k-ft	F kips	M k-ft	F kips	M k-ft	F kips	M k-ft
H	DC	-1.14	x	5	=	-1.43	-7.13	-1.03	-5.13	-1.71	-8.55	-1.14	-5.7
H	DW	-0.18	x	5	=	-0.27	-1.35	-0.12	-0.59	-0.27	-1.35	-0.18	-0.9
H	EH	0.29	x	5	=	0.44	2.18	0.44	2.18	0.44	2.175	0.29	1.45
H	EV	-1.85	x	5	=	-2.50	-12.49	-1.85	-9.25	-2.50	-12.5	-1.85	-9.25
H	LL	-4.7	x	5	=	-8.23	-41.13	-8.23	-41.13	0.00	0	-4.70	-23.5
H	LS	0	x	5	=	0.00	0.00	0.00	0.00	0.00	0	0.00	0
H	EH	2.589	x	2.5	=	3.88	9.71	3.88	9.71	3.88	9.709	2.59	6.473
H	EH	0.495	x	1.667	=	0.74	1.24	0.74	1.24	0.74	1.237	0.49	0.825
H	LS	1.484	x	2.5	=	2.60	6.49	2.60	6.49	0.00	0	1.48	3.711
Totals						-4.76	-42.47	-3.56	-36.48	0.58	-9.27	-3.01	-26.89

Stem Design Forces:	**Mu = -42.47 k-ft**	**Ma = -26.89 k-ft**	**Vu = -4.76 k**	
FTG. B =	6 ft	6 ft	6 ft	6 ft
B/6 =	1 ft	1 ft	1 ft	1 ft
e =	-0.792 ft	-0.761 ft	-0.150 ft	-0.740 ft
Total Vertical =	49.62 k	41.24 k	32.32 k	33.98 k
Pressure @ P1 (Toe)	1.72 psf	1.65 psf	4.58 psf	1.47 psf
Pressure @ P2 (Heel)	14.82 psf	12.10 psf	6.19 psf	9.85 psf
Pressure @ FF Stem (Toe)	3.90 psf	3.39 psf	4.85 psf	2.87 psf
Pressure @ RF Stem (Heel)	8.81 psf	7.31 psf	5.45 psf	6.01 psf
Upward Bending Moment (Heel)	48.46 k-ft	39.72 k-ft	22.49 k-ft	32.41 k-ft
Upward Shear (Heel)	32.49 k	26.69 k	16.02 k	21.81 k
Downward Overburden Moment (Heel)	-12.92 k-ft	-9.57 k-ft	-12.92 k-ft	-9.57 k-ft
Downward Overburden Shear (Heel)	-9.40 k	-6.96 k	-9.40 k	-6.96 k
Downward Heel Weight Moment (Heel)	-1.36 k-ft	-0.98 k-ft	-1.63 k-ft	-1.09 k-ft
Downward Heel Weight Shear (Heel)	-0.99 k	-0.71 k	-1.19 k	-0.79 k
Net Upward Bending Moment (Heel)	34.18 k-ft	29.17 k-ft	7.93 k-ft	21.75 k-ft
Net Upward Shear (Heel)	22.11 k	19.02 k	5.43 k	14.06 k
Upward Bending Moment (Toe)	1.225 k-ft	1.113 k-ft	2.334 k-ft	0.97 k-ft
Upward Shear (Toe)	2.81 k	2.52 k	4.71 k	2.17 k
Footing Design Forces:	**Upward Mu = 34.18 k-ft**	**Upward Ma = 21.75 k-ft**	**Up. Shear Vu = 22.11 k**	

DELTA
ENGINEERS, ARCHITECTS, & LAND SURVEYORS
860 Hooper Road, Endwell, NY 13760
www.deltaengineers.com
Phone: (607) 231-6600
Fax: (607) 231-6650

JOB	2014.059.004		
DESCIPTION	28'x10' Arch Footing 2 - Max. Live Load		
SHEET NO	OF	SCALE	
CALCULATED BY	YL	DATE	3/21/2014
CHECKED BY	SLW	DATE	3/24/14

Stem and Footing Design Forces - Stablilty about Toe - structure without live load reaction

Footing Width	6	ft
Toe width	1	ft
Heel Width	2.75	ft
Footing Thickness	1.917	ft
Overburden Ht over Heel	18.08	ft

Limit States

Factor	Str-1a	Str-1b	Str-IV	Serv
DC	1.25	0.90	1.50	1.00
DW	1.50	0.65	1.50	1.00
EH	1.50	1.50	1.50	1.00
EV	1.35	1.00	1.35	1.00
LL	1.75	1.75	0.00	1.00
LS	1.75	1.75	0.00	1.00

Note: Inward forces are positive, negative moment indicates inside face in tension.

Dir	Factor	Force		Arm ft		Str-1a F kips	Str-1a M k-ft	Str-1b F kips	Str-1b M k-ft	Str-IV F kips	Str-IV M k-ft	Service F kips	Service M k-ft
H	DC	-1.14	x	5	=	-1.43	-7.13	-1.03	-5.13	-1.71	-8.55	-1.14	-5.7
H	DW	-0.18	x	5	=	-0.27	-1.35	-0.12	-0.59	-0.27	-1.35	-0.18	-0.9
H	EH	0.29	x	5	=	0.44	2.18	0.44	2.18	0.44	2.175	0.29	1.45
H	EV	-1.85	x	5	=	-2.50	-12.49	-1.85	-9.25	-2.50	-12.5	-1.85	-9.25
H	LL	0	x	5	=	0.00	0.00	0.00	0.00	0.00	0	0.00	0
H	LS	0	x	5	=	0.00	0.00	0.00	0.00	0.00	0	0.00	0
H	EH	2.589	x	2.5	=	3.88	9.71	3.88	9.71	3.88	9.709	2.59	6.473
H	EH	0.495	x	1.667	=	0.74	1.24	0.74	1.24	0.74	1.237	0.49	0.825
H	LS	1.484	x	2.5	=	2.60	6.49	2.60	6.49	0.00	0	1.48	3.711
Totals						3.47	-1.35	4.67	4.65	0.58	-9.27	1.69	-3.39

	Str-1a	Str-1b	Str-IV	Service
Stem Design Forces:	**Mu = -9.27 k-ft**	**Ma = -3.39 k-ft**	**Vu = 0.58 k**	
FTG. B =	6 ft	6 ft	6 ft	6 ft
B/6 =	1 ft	1 ft	1 ft	1 ft
e =	0.032 ft	0.400 ft	0.150 ft	0.092 ft
Total Vertical =	30.59 k	22.22 k	32.32 k	23.11 k
Pressure @ P1 (Toe)	5.26 psf	5.18 psf	6.19 psf	4.21 psf
Pressure @ P2 (Heel)	4.94 psf	2.22 psf	4.58 psf	3.50 psf
Pressure @ FF Stem (Toe)	5.21 psf	4.69 psf	5.92 psf	4.09 psf
Pressure @ RF Stem (Heel)	5.09 psf	3.58 psf	5.32 psf	3.82 psf
Upward Bending Moment (Heel)	18.86 k-ft	10.12 k-ft	18.25 k-ft	13.63 k-ft
Upward Shear (Heel)	13.78 k	7.98 k	13.61 k	10.06 k
Downward Overburden Moment (Heel)	-12.92 k-ft	-9.57 k-ft	-12.92 k-ft	-9.57 k-ft
Downward Overburden Shear (Heel)	-9.40 k	-6.96 k	-9.40 k	-6.96 k
Downward Heel Weight Moment (Heel	-1.36 k-ft	-0.98 k-ft	-1.63 k-ft	-1.09 k-ft
Downward Heel Weight Shear (Heel)	-0.99 k	-0.71 k	-1.19 k	-0.79 k
Net Upward Bending Moment (Heel)	4.57 k-ft	-0.44 k-ft	3.69 k-ft	2.97 k-ft
Net Upward Shear (Heel)	3.39 k	0.31 k	3.03 k	2.31 k
Upward Bending Moment (Toe)	2.621 k-ft	2.51 k-ft	3.052 k-ft	2.084 k-ft
Upward Shear (Toe)	5.23 k	4.94 k	6.06 k	4.15 k
Footing Design Forces:	**Upward Mu = 4.57 k-ft**	**Upward Ma = 2.97 k-ft**	**Up. Shear Vu = 6.06 k**	

DELTA
ENGINEERS, ARCHITECTS, & LAND SURVEYORS
860 Hooper Road, Endwell, NY 13760
www.deltaengineers.com
Phone: (607) 231-6600
Fax: (607) 231-6650

JOB	2014.059.004		
DESCIPTION	28'x10' Arch Footing 2 - Max. Live Load		
SHEET NO	OF	SCALE	
CALCULATED BY	YL	DATE	3/21/2014
CHECKED BY	SLV	DATE	3/24/11

Stem and Footing Design Forces - Stablilty about Toe - Prior to Structure Placement

Footing Width	6 ft
Toe width	1 ft
Heel Width	2.75 ft
Overburned Ht over Heel	5 ft

Limit States

Factor	Str-1a	Str-1b	Str-IV	Serv
DC	1.25	0.90	1.50	1.00
DW	1.50	0.65	1.50	1.00
EH	1.50	1.50	1.50	1.00
EV	1.35	1.00	1.35	1.00
LL	1.75	1.75	0.00	1.00
LS	1.75	1.75	0.00	1.00

Note: Inward forces are positive, negative moment indicates inside face in tension.

						Str-1a		Str-1b		Str-IV		Service	
Dir	Factor	Force		Arm ft		F kips	M k-ft	F kips	M k-ft	F kips	M k-ft	F kips	M k-ft
H	DC	0	x	5	=	0.00	0.00	0.00	0.00	0.00	0	0.00	0
H	DW	0	x	5	=	0.00	0.00	0.00	0.00	0.00	0	0.00	0
H	EH	0	x	5	=	0.00	0.00	0.00	0.00	0.00	0	0.00	0
H	EV	0	x	5	=	0.00	0.00	0.00	0.00	0.00	0	0.00	0
H	LL	0	x	5	=	0.00	0.00	0.00	0.00	0.00	0	0.00	0
H	EH	0	x	2.5	=	0.00	0.00	0.00	0.00	0.00	0	0.00	0
H	EH	0.495	x	1.667	=	0.74	1.24	0.74	1.24	0.74	1.237	0.49	0.825
H	LS	1.484	x	2.5	=	2.60	6.49	2.60	6.49	0.00	0	1.48	3.711
Totals						3.34	7.73	3.34	7.73	0.74	1.24	1.98	4.54

Stem Design Forces: **Mu = 7.73 k-ft** **Ma = 4.54 k-ft** **Vu = 3.34 k**

FTG.

Downward Overburden Moment (Heel)	-3.57 k-ft	-2.65 k-ft	-3.57 k-ft	-2.65 k-ft
Downward Overburden Shear (Heel)	-2.60 k	-1.93 k	-2.60 k	-1.93 k

Footing Design Forces: **Downward Mu = -3.57 k-ft** **Down. Ma = -2.65 k-ft** **Up. Shear Vu = -2.60 k**

DELTA
ENGINEERS, ARCHITECTS, & LAND SURVEYORS
860 Hooper Road, Endwell, NY 13760
www.deltaengineers.com
Phone: (607) 231-6600
Fax: (607) 231-6650

JOB	2014.059.004		
DESCIPTION	28'x10' Arch Footing 2 - Max. Live Load		
SHEET NO	OF	SCALE	
CALCULATED BY	YL	DATE	5/20/2014
CHECKED BY	RA	DATE	5-20-14

Stem Inside Face Reinforcing Design

Limit State: Strength

MATERIAL PROPERTIES:

1 Concrete Strength, F'c	5	ksi	
2 Reinforcing Steel Yield, Fy	60	ksi	
3 Concrete Unit Weight	150	pcf	
4 Soil Unit Weight	140	pcf	

Member Design Width b =	12.00	in
Member Thickness Ts =	27.00	in
Bar Cover =	3.00	in
Bar Size =	6	
de=Ts-Cov-Bar Size/2 =	23.63	in

Ec = 57000 * √f'c = 4031 ksi

Es = 29000 ksi

n = Es / Ec = 7.20

0.65 < β1 < 0.85 = 0.80

$$\rho_b = \frac{0.85\beta_1 \bullet f'c}{f_y} \bullet \left[\frac{87{,}000}{87{,}000 + f_y}\right] = 0.0335$$

fr = .37 * √f'c = 0.83 ksi

Unfactored Moment, Ma =	30.60	kip-ft
Design Ultimate Moment, Mu =	54.21	kip-ft
Ultimate Shear, Vu =	9.38	kips

Capacity Reduction Factors

Moment, ΦM =	0.9
Shear, ΦV =	0.9

dv = Greater of .72h or 0.9 de = 21.263 in

β = 2.0

Vc=ϕ(0.0316)β√f'c*b*dv= 32.45 kips/ft **> 2Vu OK**

$$\rho = \left[1 - \left(\sqrt{1 - \frac{2 \bullet M_u}{\phi b d^2 \bullet .85 f'c}}\right)\right] \bullet \frac{.85 f'c}{f_y} = 0.00182$$

Steel Area Req'd; As =ρ * b * d = 0.5166 in^2/ft

Use #6 Bar @ 7.00 in oc

As Prov = 0.76 in^2/ft

ρ Prov = 0.00267 **OK**

Check Min As > 1.33 AsReq **OK**

φMn = φAsfy(de-a/2)/12 = 78.997 kip-ft **OK**

c=As*Fy/.85*f'c*β1*b = 1.1137 in

c/de ≤ 0.6; c/de = 0.0471 OK

a = β_1c = 0.891 in

Ig = $bt^3/12$ = 19683 in^4

y_t = T/2 = 13.50 in

Mcr = fr*(Ig / yt) = 100.52 kip-ft

1.2Mcr= 120.63 kip-ft

CHECK CRACKING

$$k = \sqrt{2\rho n + \rho n^2} - \rho n = 0.1778$$

j = 1 - (k/3) = 0.941

fs = Ma/(As*j*d) = 21.817 ksi

max spa ≤ [(700γe) / (βsfs)] - 2dc = 21 in

dc= 2.38 in

Bs=1+dc/(0.7*(h-dc))= 1.1378

γe= 0.75

DELTA
ENGINEERS, ARCHITECTS, & LAND SURVEYORS
860 Hooper Road, Endwell, NY 13760
www.deltaengineers.com
Phone: (607) 231-6600
Fax: (607) 231-6650

JOB	2014.059.004		
DESCIPTION	28'x10' Arch Footing 2 - Max. Live Load		
SHEET NO	OF	SCALE	
CALCULATED BY	YL	DATE	5/20/2014
CHECKED BY	RA	DATE	5-20-14

Stem Outside Face Reinforcing Design

Limit State: Strength

MATERIAL PROPERTIES:

1 Concrete Strength, F'c	5	ksi
2 Reinforcing Steel Yield, Fy	60	ksi
3 Concrete Unit Weight	150	pcf
4 Soil Unit Weight	140	pcf

Member Design Width b =	12.00	in
Member Thickness Ts =	27.00	in
Bar Cover =	2.00	in
Bar Size =	4	
de=Ts-Cov-Bar Size/2 =	24.75	in

Ec = 57000 * √f'c = 4031 ksi

Es = 29000 ksi

$$\rho_b = \frac{0.85\beta_1 \bullet f'c}{f_y} \bullet \left[\frac{87{,}000}{87{,}000 + f_y}\right] = 0.0335$$

n = Es / Ec = 7.20

fr = .37 * √f'c = 0.83 ksi

0.65 < β1 < 0.85 = 0.80

Unfactored Moment, Ma =	4.54	kip-ft
Design Ultimate Moment, Mu =	7.73	kip-ft
Ultimate Shear, Vu =	3.34	kips

Capacity Reduction Factors

Moment, ΦM =	0.9
Shear, ΦV =	0.9

dv = Greater of .72h or 0.9 de = 22.275 in

β = 2.0

Vc=ϕ(0.0316)β√f'c*b*dv= 34.00 kips/ft **> 2Vu OK**

$$\rho = \left[1 - \left(\sqrt{1 - \frac{2 \bullet M_u}{\phi b d^2 \bullet .85 f'c}}\right)\right] \bullet \frac{.85 f'c}{f_y} = 0.00023$$

Steel Area Req'd; As =ρ * b * d = 0.0695 in^2/ft

Use #4 Bar @ 12.00 in oc

As Prov = 0.20 in^2/ft

ρ Prov = 0.00066 **OK**

Check Min As > 1.33 AsReq **OK**

φMn = φAsfy(de-a/2)/12 = 21.766 kip-ft **OK**

c=As*Fy/.85*f'c*β1*b = 0.28875 in

c/de ≤ 0.6; c/de = 0.01167 OK

a = β_1c = 0.231 in

Ig = $bt^3/12$ = 19683 in^4

y_t = T/2 = 13.50 in

Mcr = fr*(Ig / yt) = 100.52 kip-ft

1.2Mcr= 120.63 kip-ft

CHECK CRACKING

$$k = \sqrt{2\rho n + \rho n^2} - \rho n = 0.0929$$

j = 1 - (k/3) = 0.969

fs = Ma/(As*j*d) = 11.557 ksi

max spa ≤ [(700γe) / (βsfs)] - 2dc = 40 in

dc= 2.25 in

Bs=1+dc/(0.7*(h-dc))= 1.12987

γe= 0.75

DELTA
ENGINEERS, ARCHITECTS, & LAND SURVEYORS
860 Hooper Road, Endwell, NY 13760
www.deltaengineers.com
Phone: (607) 231-6600
Fax: (607) 231-6650

JOB	2014.059.004		
DESCIPTION	28'x10' Arch Footing 2 - Max. Live Load		
SHEET NO	OF	SCALE	
CALCULATED BY	YL	DATE	5/20/2014
CHECKED BY	RA	DATE	5-20-14

Footing Bottom Reinforcing design

Limit State: Strength

MATERIAL PROPERTIES:

1 Concrete Strength, F'c	5	ksi	
2 Reinforcing Steel Yield, Fy	60	ksi	
3 Concrete Unit Weight	150	pcf	
4 Soil Unit Weight	140	pcf	

Member Design Width b =	12.00	in	
Member Thickness Ts =	20.00	in	(3" Keyway)
Bar Cover =	3.00	in	
Bar Size =	6		
de=Ts-Cov-Bar Size/2 =	16.63	in	

Ec = 57000 * √f'c = 4031 ksi

Es = 29000 ksi

n = Es / Ec = 7.20

0.65 < β1 < 0.85 = 0.80

$$\rho_b = \frac{0.85\beta_1 \bullet f'c}{f_y} \bullet \left[\frac{87{,}000}{87{,}000 + f_y}\right] = 0.0335$$

fr = .37 * √f'c = 0.83 ksi

Unfactored Moment, Ma =	23.00	kip-ft	
Design Ultimate Moment, Mu =	41.27	kip-ft	
Ultimate Shear, Vu =	26.37	kips	

Capacity Reduction Factors

Moment, ΦM =	0.9
Shear, ΦV =	0.9

dv = Greater of .72h or 0.9 de = 14.96 in

β = 2.0

Vc=ϕ(0.0316)β√f'c*b*dv= 22.84 kips/ft **NG** <=== Say OK. Taking shear at face of stem…is conservative

$$\rho = \left[1 - \left(\sqrt{1 - \frac{2 \bullet M_u}{\phi b d^2 \bullet .85 f'c}}\right)\right] \bullet \frac{.85 f'c}{f_y} = 0.00282$$

Steel Area Req'd; As =ρ * b * d = 0.563 in^2/ft

Use #6 Bar @ 7.00 in oc

As Prov = 0.76 in^2/ft

ρ Prov = 0.00380 **OK**

Check Min As > 1.33 AsReq **OK**

φMn = φAsfy(de-a/2)/12 = 55.14 kip-ft **OK**

c=As*Fy/.85*f'c*β1*b = 1.114 in

c/de ≤ 0.42; c/de = 0.067 OK

a = β_1c = 0.891 in

Ig = $bt^3/12$ = 8000 in^4

y_t = T/2 = 10.00 in

Mcr = fr*(Ig / yt) = 55.16 kip-ft

1.2Mcr= 66.19 kip-ft

CHECK CRACKING

$$k = \sqrt{2\rho n + \rho n^2} - \rho n = 0.208$$

j = 1 - (k/3) = 0.931

fs = Ma/(As*j*d) = 23.55 ksi

max spa ≤ [(700γe) / (βsfs)] - 2dc = 19 in

dc= 2.38 in

Bs=1+dc/(0.7*(h-dc))= 1.193

γe= 0.75

DELTA
ENGINEERS, ARCHITECTS, & LAND SURVEYORS
860 Hooper Road, Endwell, NY 13760
www.deltaengineers.com
Phone: (607) 231-6600
Fax: (607) 231-6650

JOB	2014.059.004 229		
DESCIPTION	28'x10' Arch Footing 2 - Max. Live Load		
SHEET NO	OF	SCALE	
CALCULATED BY	YL	DATE	5/20/2014
CHECKED BY	RA	DATE	5-20-14

Footing Top Reinforcing design

Limit State: Strength

MATERIAL PROPERTIES:

1 Concrete Strength, F'c	5	ksi	
2 Reinforcing Steel Yield, Fy	60	ksi	
3 Concrete Unit Weight	150	pcf	
4 Soil Unit Weight	140	pcf	

Member Design Width b =	12.00	in	
Member Thickness Ts =	20.00	in	(3" Keyway)
Bar Cover =	3.00	in	
Bar Size =	4		
de=Ts-Cov-Bar Size/2 =	16.75	in	

Ec = 57000 * √f'c = 4031 ksi

Es = 29000 ksi

n = Es / Ec = 7.20

0.65 < β1 < 0.85 = 0.80

$$\rho_b = \frac{0.85\beta_1 \bullet f'c}{f_y} \bullet \left[\frac{87{,}000}{87{,}000 + f_y}\right] = 0.0335$$

fr = .37 * √f'c = 0.83 ksi

Unfactored Moment, Ma =	2.65	kip-ft
Design Ultimate Moment, Mu =	3.57	kip-ft
Ultimate Shear, Vu =	2.60	kips

Capacity Reduction Factors

Moment, ΦM =	0.9
Shear, ΦV =	0.9

dv = Greater of .72h or 0.9 de = 15.08 in

β = 2.0

Vc=ϕ(0.0316)β√f'c*b*dv= 23.01 kips/ft **> Vu OK**

$$\rho = \left[1 - \left(\sqrt{1 - \frac{2 \bullet M_u}{\phi b d^2 \bullet .85 f'c}}\right)\right] \bullet \frac{.85 f'c}{f_y} = 0.00024$$

Steel Area Req'd; As =ρ * b * d = 0.047 in^2/ft

Use #4 Bar @ 12.00 in oc

As Prov = 0.20 in^2/ft

ρ Prov = 0.00098 **OK**

Check Min As > 1.33 AsReq **OK**

φMn = φAsfy(de-a/2)/12 = 14.7 kip-ft **OK**

c=As*Fy/.85*f'c*β1*b = 0.289 in

c/de ≤ 0.42; c/de = 0.017 OK

a = β_1c = 0.231 in

Ig = $bt^3/12$ = 8000 in^4

y_t = T/2 = 10.00 in

Mcr = fr*(Ig / yt) = 55.16 kip-ft

1.2Mcr= 66.19 kip-ft

CHECK CRACKING

$$k = \sqrt{2\rho n + \rho n^2} - \rho n = 0.112$$

j = 1 - (k/3) = 0.963

fs = Ma/(As*j*d) = 10.03 ksi

max spa ≤ [(700γe) / (βsfs)] - 2dc = 44 in

dc= 2.25 in

Bs=1+dc/(0.7*(h-dc))= 1.181

γe= 0.75