REVIEW NOTES

ROCHESTER ER BRF 0162(18) – BRIDGE NO. 19

TEMPORARY ABUTMENT DRAWINGS

April 29, 2014

RE: Temporary Abutment Drawings received from Schultz Construction on 4/24/2014.

VHB Project No.: 57517.00

NOTE: THE SUBMITTAL IS ACCEPTED AS NOTED BELOW AND IN THE ATTACHED PDF.

These notes accompany the review of the Temporary Abutment Drawings reviewed by VHB on 4/25/2014.

General Notes:

1. Show the contours and the toe of slope for the entire length of the detour.
2. See the following sheets for additional comments.

SUBMITTAL REVIEW

☒ Reviewed and approved but only for conformance to the Construction Contract Documents.

☐ Revise and Resubmit

Corrections or comments made during this review do not relieve the Contractor or his Designer from compliance with professional requirements or for responsibility for the adequacy of the submittal information. This check is only for review of general conformance with industry standards and general compliance with the information given in the Contract Documents. VHB has not conducted a detailed review of the submittal and has not performed calculations or assessed the adequacy of loads, design criteria, quantities, dimensions, etc. Approval of the submittal does not constitute VHB's approval of any construction means, methods or techniques. These remain the responsibility of the Contractor.

Vanasse Hangen Brustlin, Inc.
7056 US Route 7 • Post Office Box 120
North Ferrisburgh, VT 05473
802.425.7788

Job Number: 57517.00
Reviewed By: E.A. Fiala
Date: April 29, 2014

This submittal review is for sheets 1-30, inclusive, of the "PLAN 140401A REV01 Temporary Bridge Abutments" submittal received on 4/24/2014.

Vermont Agency of Transportation
RECEIVED
ON: April 24, 2014
and Checked for
CONFORMANCE
BY: Jennifer Fitch DATE: 04/29/2014

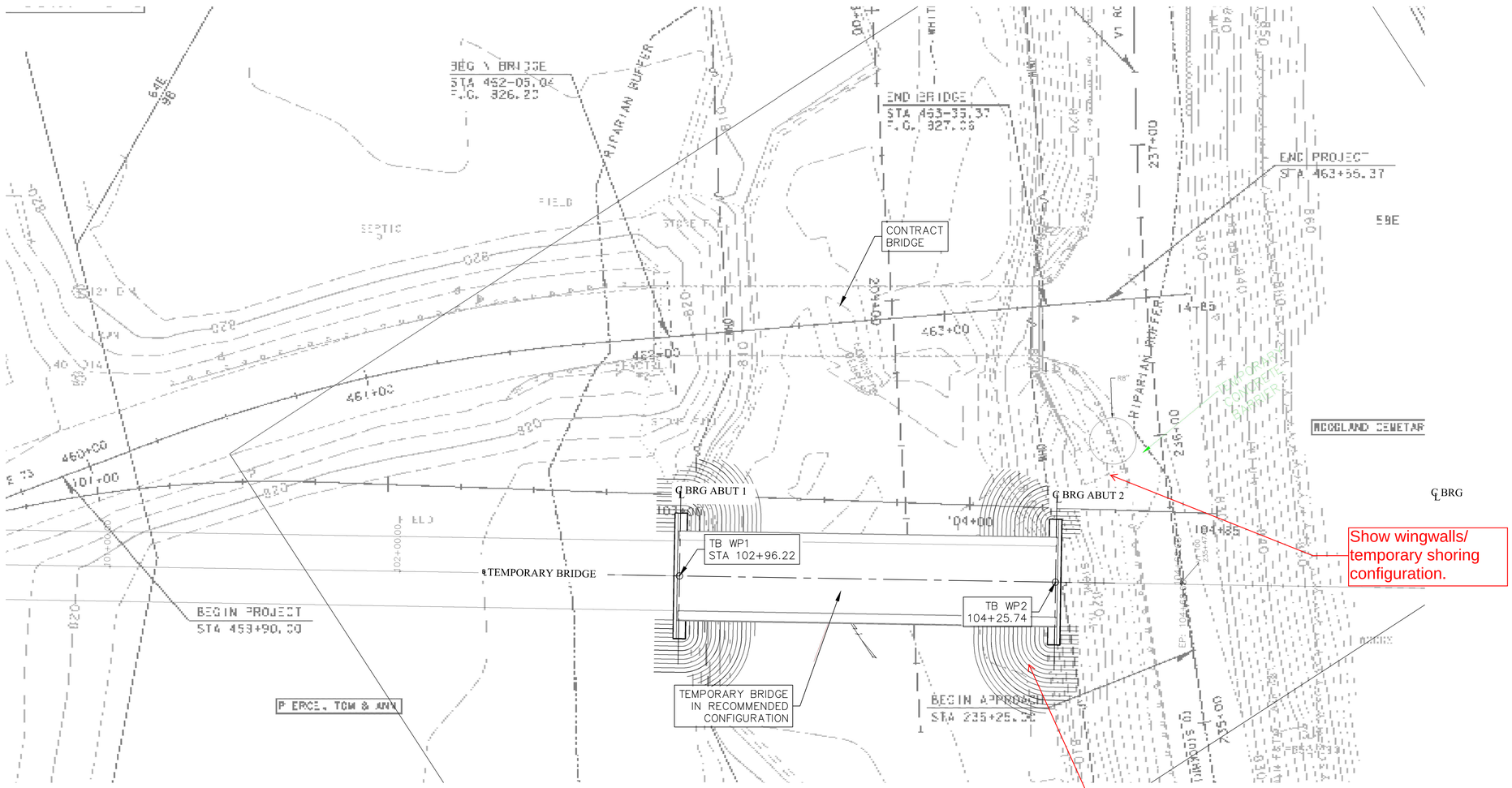

PLAN VIEW
1" = 20'

General Notes

General:

1. Existing conditions are taken from Contract Drawings.
2. All dimensions relative to existing elements are to be field checked prior to fabrication and installation of proposed elements.
3. Control datums are those from the Contract Documents.
4. Design is based on conditions shown in the Contract Documents. Should conditions encountered in the field vary from those indicated conditions, the design may be invalid and revisions should be investigated.

STATE OF VERMONT
TERRY A. WAITE
LICENSED PROFESSIONAL ENGINEER

-140331-

No.	Revision/Issue	Date
1	temporary bridge relocated	140424

Firm Name and Address
TAW Associates
Waterville Valley, NH
603-236-4247 www.TAWAssociates.net

Proposed Improvement Bridge Project Bridge No. 13, 15, 16 & 19 - Rochester, VT
Vtrans ER BRF 0162(19), (16), (17) & (18)

Project Name and Address

Temporary Bridge Substructure

GENERAL PLAN

Project 140401A	Sheet 01
Date March 31, 2014	
Scale noted	

SCHULTZ CONSTRUCTION, INC.

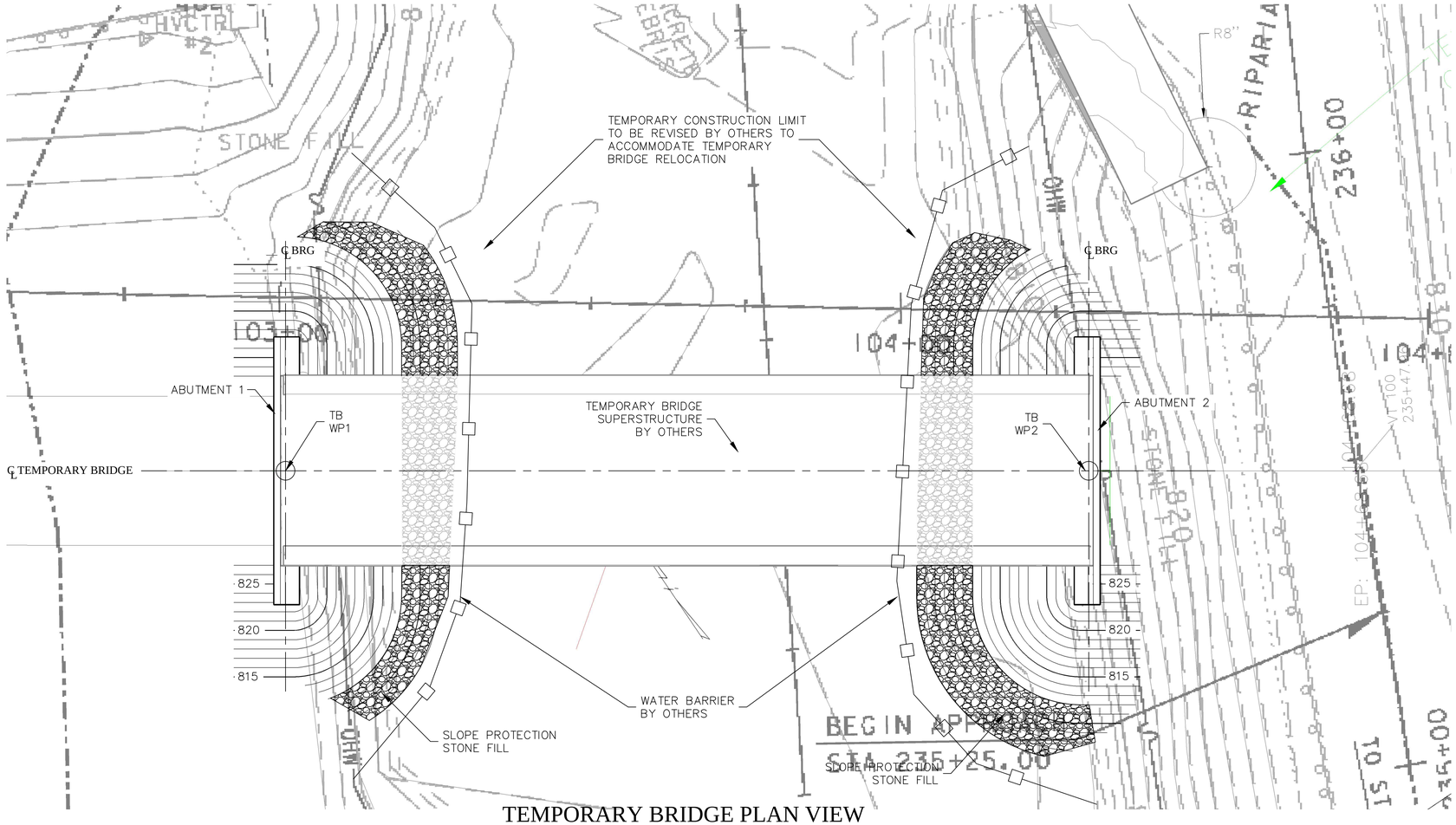

TEMPORARY BRIDGE PLAN VIEW

1" = 10'

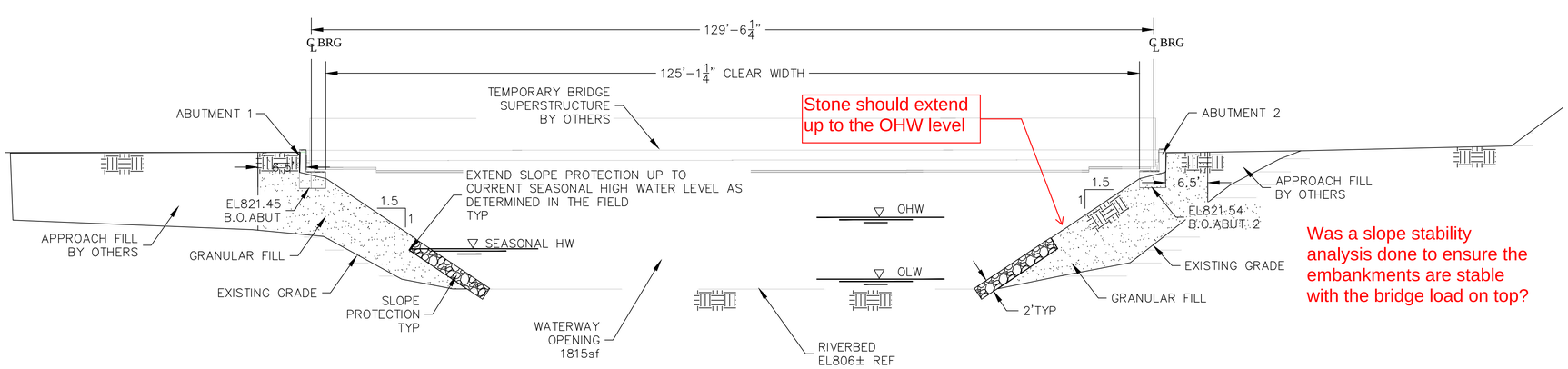

TEMPORARY BRIDGE ELEVATION

1" = 10'

Fill:

1. Granular Fill shall consist of stones, rock fragments, and fine, hard durable particles resulting from the natural disintegration of rock.
2. The material shall be free from injurious amounts of organic matter.
3. Not more than 15% of the material passing the No. 4 sieve shall pass the No. 200 sieve and the material shall conform to the following gradations unless otherwise noted:

Sieve Size	% by Weight
3 inch	100
No. 4	70 - 100

4. Structural Fill shall consist of crushed gravel and shall meet fhr following specifications unless otherwise noted:

Sieve Size	% by Weight
3 inch	100
2 inch	95 - 100
1 inch	55 - 85
No. 4	27 - 52
No. 200	0 - 12 (based on the % passing the No.4)

Footings:

1. Bottom of footing elevations given are minimum depths, and are not to be construed as limiting the excavation required to reach good bearing soil.
2. Footing and slab subgrades shall not be allowed to freeze. In the event that frost penetration does occur, all frozen soils shall be removed and replaced with compacted structural fill.

VTrans standard practice is to use 35 degrees for granular fill.

General Notes

Temporary Bridge Abutments:

1. This work shall consist of the design, construction, maintenance, and removal of temporary bridge substructures.
2. The Contractor may use any material or combination of materials that will conform to the requirements of Spec Subsection 528.02 and meet the approval of the Engineer.
3. The Engineer reserves the right to reject materials and details that are structurally unsafe for the use proposed.
4. Any welded connection performed in the absence of and without the approval of the Agency's Welding Inspector will not be approved.
5. Fill placed in or adjacent to the stream shall be clean granular or rock material meeting the requirements of Subsection 703.04 or 703.05 and protected with sufficient stone to prevent erosion to a Q 10 headwater elevation (based on the new structure).
6. Any fill placed in the stream to protect the temporary bridge and approaches shall be removed to the satisfaction of the Engineer upon completion of the project.
7. Design is based on soil characteristics;
   - γsoil exist = 110pcf
   - γsoil fill = 140pcf
   - θfill = 38°
   - sbrg = 3tsf = 6000psf
8. Design is based on superstructure per document titled "ACROW 700 XS BRIDGE FOR SHULTZ CONSTRUCTION, INC. BALLSTON SPA, NY FEBRUARY 2014" dated March 12, 2014.

STATE OF VERMONT TERRY A. WAITE LICENSED PROFESSIONAL ENGINEER

-14033-

No.	Revision/Issue	Date
1	temporary bridge relocated	140424

Firm Name and Address
TAW Associates
Waterville Valley, NH
603-236-4247 www.TAWAssociates.net

Proposed Improvement Bridge Project Bridge No. 13, 15, 16 & 19 - Rochester, VT Vtrans ER BRF 0162(19), (16), (17) & (18)

Project Name and Address

Temporary Bridge Substructure

TEMPORARY BRIDGE GENERAL PLAN

Project	Sheet
140401A	02
Date: March 31, 2014	
Scale: noted	

SCHULTZ CONSTRUCTION, INC.

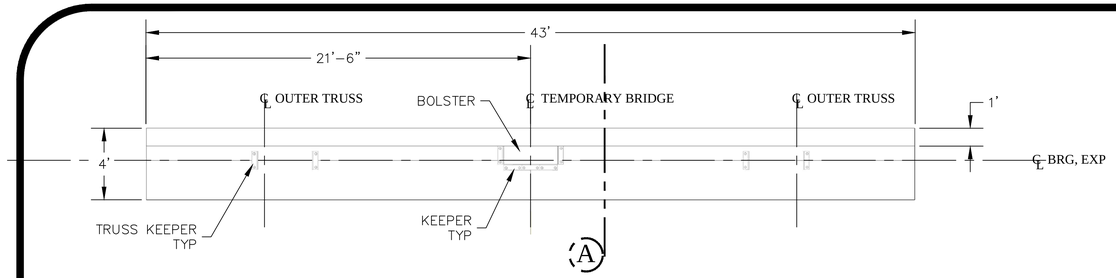

TEMPORARY BRIDGE ABUTMENT 1
PLAN VIEW
$\frac{1}{4}$" = 1'

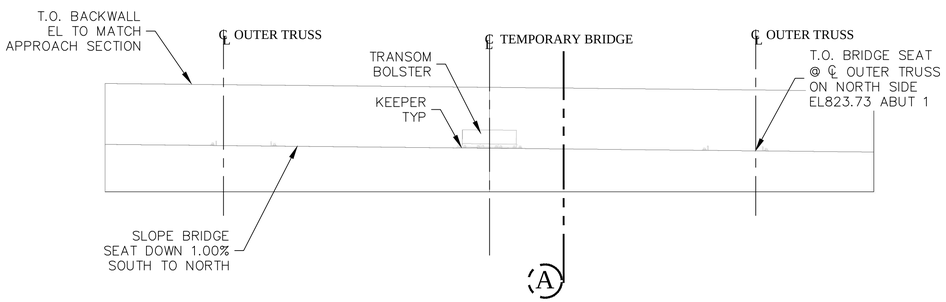

TEMPORARY BRIDGE ABUTMENT 1
ELEVATION
$\frac{1}{4}$" = 1'

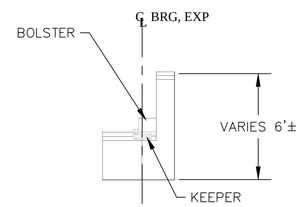

A VIEW
1/4" = 1'

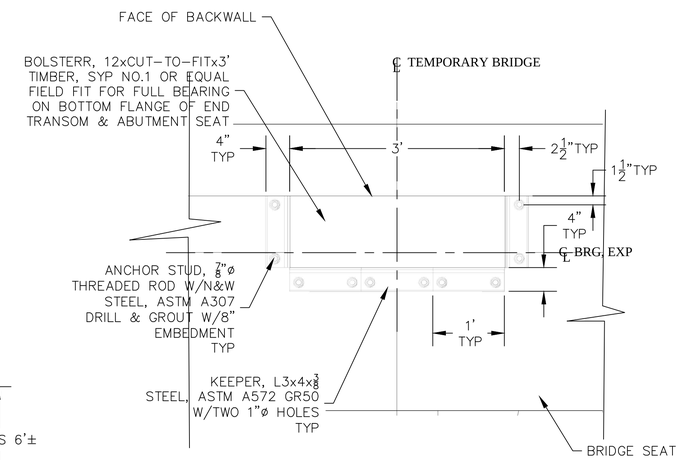

BOLSTER VIEW
1" = 1'

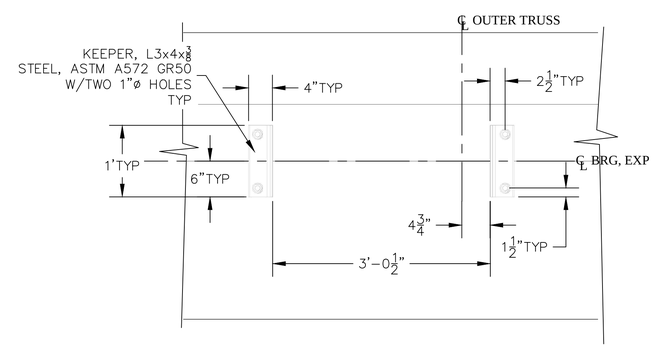

TRUSS KEEPER VIEW
(RIGHT SIDE SHOWN, LEFT SIDE MIRROR IMAGE)
1" = 1'

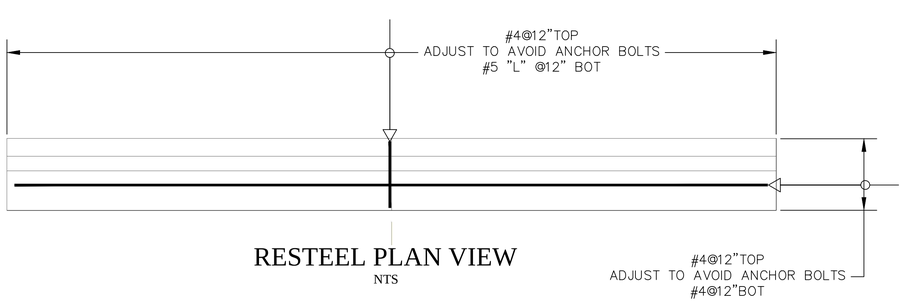

RESTEEL PLAN VIEW
NTS

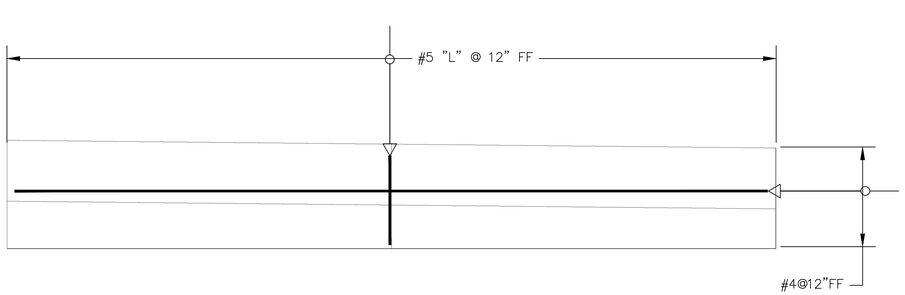

RESTEEL FRONT VIEW
NTS

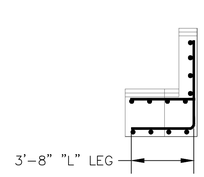

RESTEEL END VIEW
NTS

General Notes

Concrete:

1. Portland Cement for concrete shall be in accordance with ASTM C 150, Type I or Type II.
2. Cement used for all concrete shall be of the same type.
3. Aggregates for concrete shall conform to ASTM C33.
4. Concrete shall conform to American Concrete Institute ACI Standard 318.
5. Concrete shall be fc' = 3,000 psi unless otherwise indicated.

Reinforcing Steel:

1. Reinforcing steel shall be in accordance with ASTM A615 Grade 60 or better unless otherwise noted.
2. Fabrication shall be in accordance with American Concrete Institute Standard ACI 318-08.
3. There shall be no welding of reinforcing steel.
4. Placement of reinforcing steel shall be in accordance with the American Concrete Institute Standard ACI 318-08.
5. Splicing of reinforcing steel shall be in accordance with the American Concrete Institute Standard ACI 318-08.
6. Cover on reinforcing steel shall be in accordance with the American Concrete Institute Standard ACI 318-08.
7. Reinforcing Steel is to be bent cold.
8. Reinforcing Steel is to be bent to bend radii no less than 6 bar diameters for #3 through #8 bars, 8 bar diameters for #9 through #11 bars, and 10 bar diameters for #14 and #18 bars.
9. Provide 3" cover for reinforcing steel where cast against the ground, 2" cover against a form, and 2" cover against top unformed surface.

-140331-

No.	Revision/Issue	Date
1	temporary bridge relocated	140424

Firm Name and Address
TAW Associates
Waterville Valley, NH
603-236-4247 www.TAWAssociates.net

Proposed Improvement Bridge Project Bridge No. 13, 15, 16 & 19 - Rochester, VT Vtrans ER BRF 0162(19), (16), (17) & (18)

Project Name and Address
Temporary Bridge Substructure

TEMPORARY BRIDGE ABUTMENT 1

Project 140401A
Date March 31, 2014
Scale noted
Sheet 03

SCHULTZ CONSTRUCTION, INC.

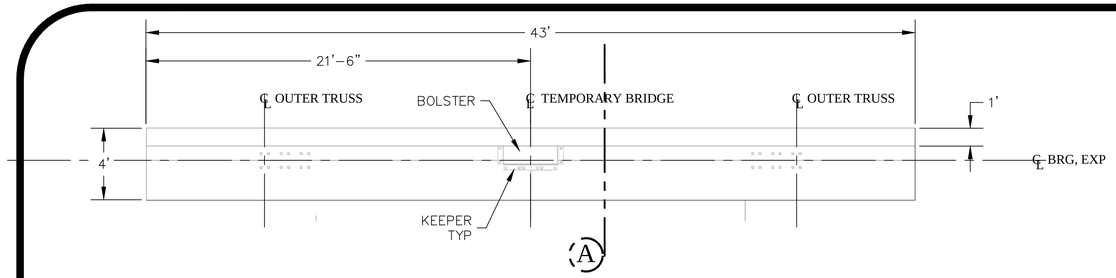

TEMPORARY BRIDGE ABUTMENT 2
PLAN VIEW

$\frac{1}{4}$" = 1'

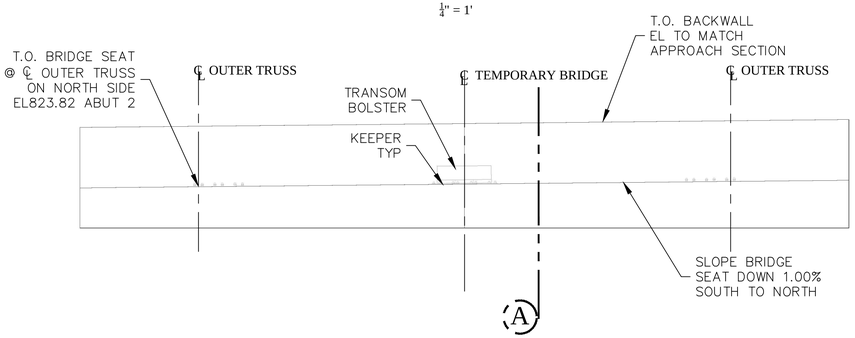

TEMPORARY BRIDGE ABUTMENT 2
ELEVATION

$\frac{1}{4}$" = 1'

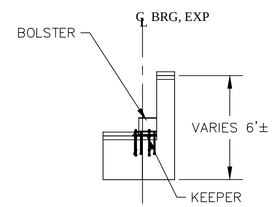

A VIEW

1/4" = 1'

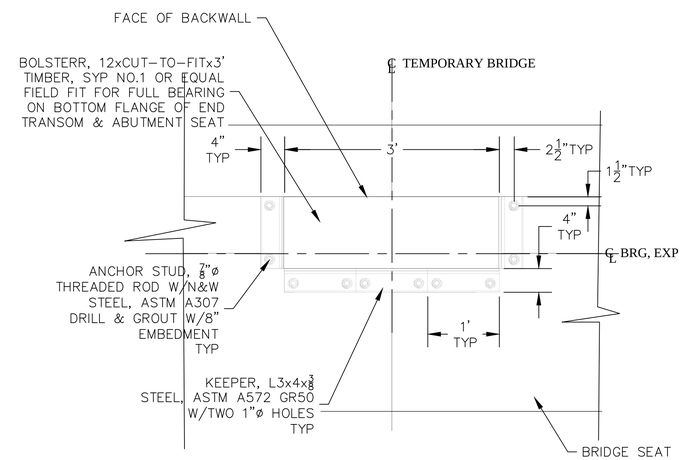

BOLSTER VIEW

1" = 1'

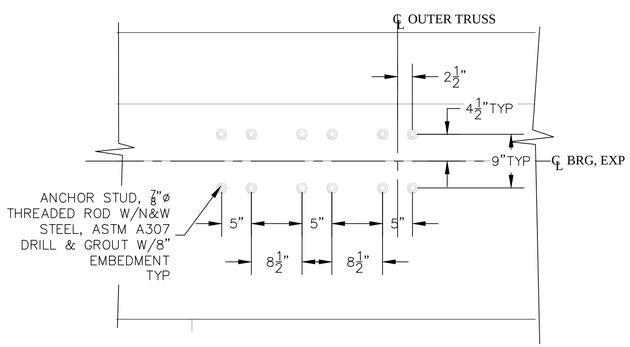

BRIDGE SHOE ANCHOR VIEW
(RIGHT SIDE SHOWN, LEFT SIDE MIRROR IMAGE)

1" = 1'

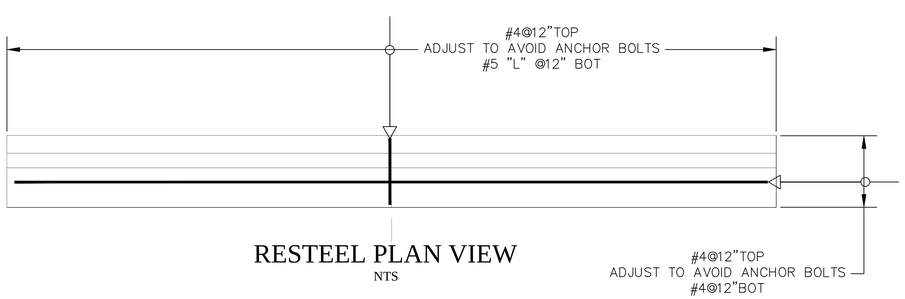

RESTEEL PLAN VIEW

NTS

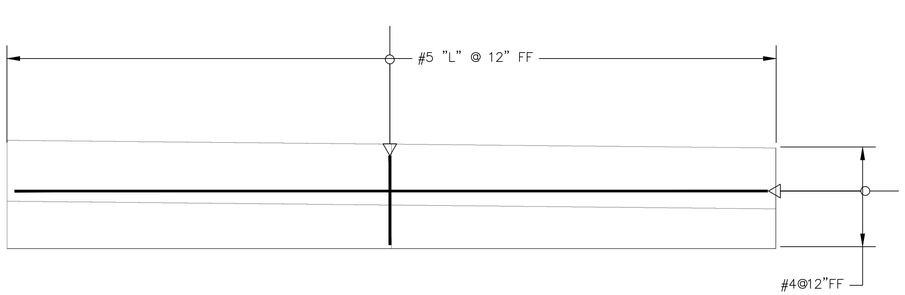

RESTEEL FRONT VIEW

NTS

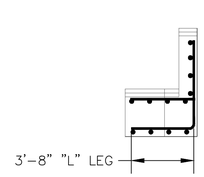

RESTEEL END VIEW

NTS

General Notes

Concrete:

1. Portland Cement for concrete shall be in accordance with ASTM C 150, Type I or Type II.
2. Cement used for all concrete shall be of the same type.
3. Aggregates for concrete shall conform to ASTM C33.
4. Concrete shall conform to American Concrete Institute ACI Standard 318.
5. Concrete shall be fc' = 3,000 psi unless otherwise indicated.

Reinforcing Steel:

1. Reinforcing steel shall be in accordance with ASTM A615 Grade 60 or better unless otherwise noted.
2. Fabrication shall be in accordance with American Concrete Institute Standard ACI 318-08.
3. There shall be no welding of reinforcing steel.
4. Placement of reinforcing steel shall be in accordance with the American Concrete Institute Standard ACI 318-08.
5. Splicing of reinforcing steel shall be in accordance with the American Concrete Institute Standard ACI 318-08.
6. Cover on reinforcing steel shall be in accordance with the American Concrete Institute Standard ACI 318-08.
7. Reinforcing Steel is to be bent cold.
8. Reinforcing Steel is to be bent to bend radii no less than 6 bar diameters for #3 through #8 bars, 8 bar diameters for #9 through #11 bars, and 10 bar diameters for #14 and #18 bars.
9. Provide 3" cover for reinforcing steel where cast against the ground, 2" cover against a form, and 2" cover against top unformed surface.

-140331-

No.	Revision/Issue	Date
1	temporary bridge relocated	140424

Firm Name and Address

TAW Associates
Waterville Valley, NH
603-236-4247 www.TAWAssociates.net

Proposed Improvement Bridge Project Bridge No. 13, 15, 16 & 19 - Rochester, VT Vtrans ER BRF 0162(19), (16), (17) & (18)

Project Name and Address

Temporary Bridge Substructure

TEMPORARY BRIDGE ABUTMENT 2

Project 140401A
Date March 31, 2014
Scale noted
Sheet 04

SCHULTZ CONSTRUCTION, INC.

DOCUMENT: 140401A REV01

Engineering Computations

Temporary Bridge Abutments

-

For The Project:

Proposed Improvement Bridge Project Bridge No. 13, 15, 16 & 19 – Rochester, VT

Vtrans ER BRF 0162(19), (16), (17) & (18)

-

for

SCHULTZ CONSTRUCTION, INC.

by

TAW ASSOCIATES

April 24, 2014

Table of Contents

SCOPE ***3***

GENERAL: ***3***

General: **3**

Temporary Bridge Abutment Design: **3**

Temporary Bridge Abutments: **4**

EXISTING CONDITIONS ***5***

LOADING: ***8***

Temporary Bridge Superstructure Reaction Loads: **8**

WEST ABUTMENT: ***10***

B-102: West End **11**

Abutment 1 Design: **14**

EAST ABUTMENT: ***17***

B-103: East End **18**

B-104: East End **19**

Abutment 2 Design: **20**

Anchors: 22

Transom Bolster: 22

Addressed Reviewer Comments dated April 7, 2014: ***25***

SCOPE

Design the abutments for the Temporary Bridge for the referenced Project.

GENERAL:

General:

1. Existing conditions are taken from Contract Drawings.
2. All dimensions relative to existing elements are to be field checked prior to fabrication and installation of proposed elements.
3. Control datums are those from the Contract Documents.
4. Design is based on conditions shown in the Contract Documents. Should conditions encountered in the field vary from those indicated conditions, the design may be invalid and revisions should be investigated.

Temporary Bridge Abutment Design:

1. This work shall consist of the design, construction, maintenance, and removal of temporary bridge substructures.
2. The Contractor may use any material or combination of materials that will conform to the requirements of Spec Subsection 528.02 and meet the approval of the Engineer.
3. The Engineer reserves the right to reject materials and details that are structurally unsafe for the use proposed.
4. Any welded connection performed in the absence of and without the approval of the Agency's Welding Inspector will not be approved.
5. Any welding must be detailed on the Working Drawings and performed in conformance with Section 506.
6. Working Drawings shall be prepared by the Contractor for the proposed work under this item in accordance with Section 105.
7. Plan, elevation, and section views shall include size and spacing of all members or components for Abutments:
8. The design and structural details of the temporary bridge substructures shall be signed, stamped, and dated by a Professional Engineer (Structural or Civil).
9. When temporary bridge requirements are not shown on the Plans, the opening area shall be at least equal to 40 percent of the waterway provided for the 100-year event (Q 100) for the new structure, with a clear height equal to a ten-year event (Q 10) headwater; this waterway to be adequate for safely conveying a mean annual flood (Q 2.33) at a headwater no greater than what would be created by the existing structure during a ten-year event.
10. Fill placed in or adjacent to the stream shall be clean granular or rock material meeting the requirements of Subsection 703.04 or 703.05 and protected with sufficient stone to prevent erosion to a Q 10 headwater elevation (based on the new structure).
11. Any fill placed in the stream to protect the temporary bridge and approaches shall be removed to the satisfaction of the Engineer upon completion of the project.
12. Questions regarding hydraulic information not furnished shall be addressed to the Engineer.

13. Unless otherwise specified, all temporary bridge structures shall be designed for an MS-18 (HS-20) or HL-93 live load, and for all other applicable forces, in accordance with the AASHTO Standard Specifications for Highway Bridges or LRFD Bridge Design Specifications.
14. Submittal of the computations indicating magnitude of stresses in the segments is not required.

Temporary Bridge Abutments:

1. This work shall consist of the design, construction, maintenance, and removal of temporary bridge substructures.
2. The Contractor may use any material or combination of materials that will conform to the requirements of Spec Subsection 528.02 and meet the approval of the Engineer.
3. The Engineer reserves the right to reject materials and details that are structurally unsafe for the use proposed.
4. Any welded connection performed in the absence of and without the approval of the Agency's Welding Inspector will not be approved.
5. Fill placed in or adjacent to the stream shall be clean granular or rock material meeting the requirements of Subsection 703.04 or 703.05 and protected with sufficient stone to prevent erosion to a Q 10 headwater elevation (based on the new structure).
6. Any fill placed in the stream to protect the temporary bridge and approaches shall be removed to the satisfaction of the Engineer upon completion of the project.
7. Design is based on soil characteristics;

   $\gamma_{soil\ exist}$ = 110pcf
   $\gamma_{soil\ fill}$ = 140pcf
   θ_{fill} = 38°
   s_{brg} = 3tsf = 6000psf
8. Design is based on superstructure per document titled "ACROW 700 XS BRIDGE FOR SHULTZ CONSTRUCTION, INC. BALLSTON SPA, NY FEBRUARY 2014" dated March 12, 2014.

EXISTING CONDITIONS

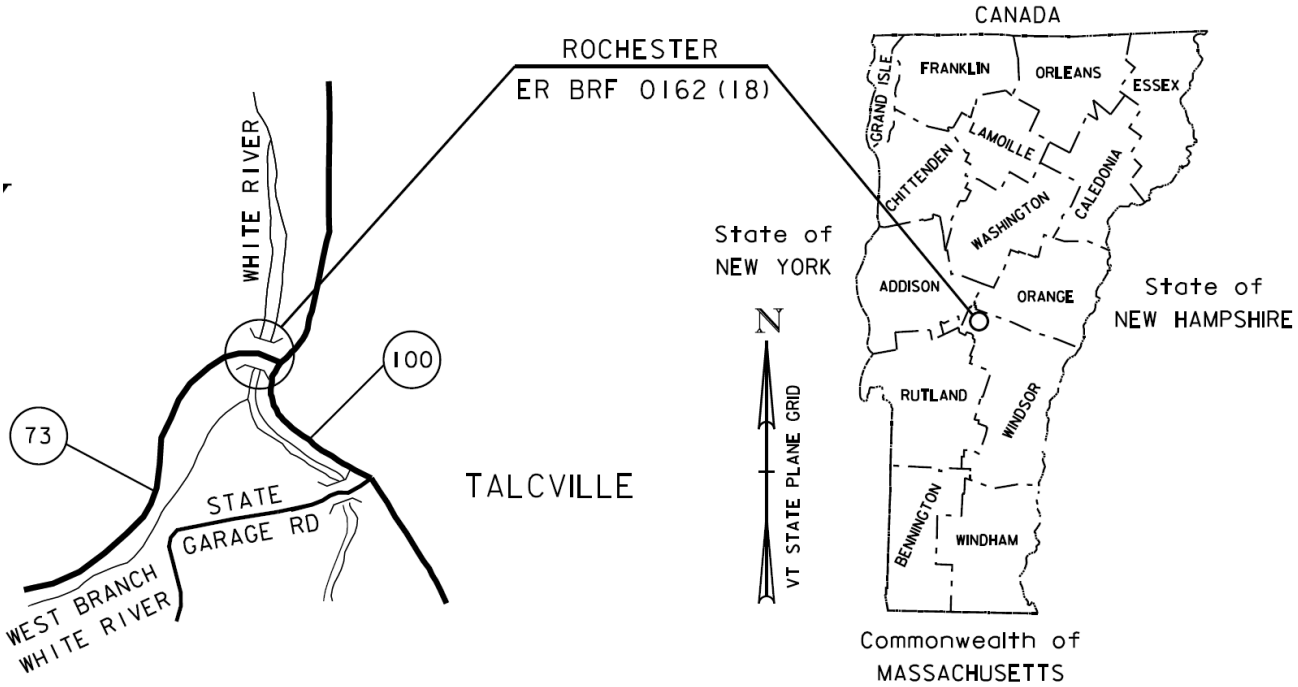

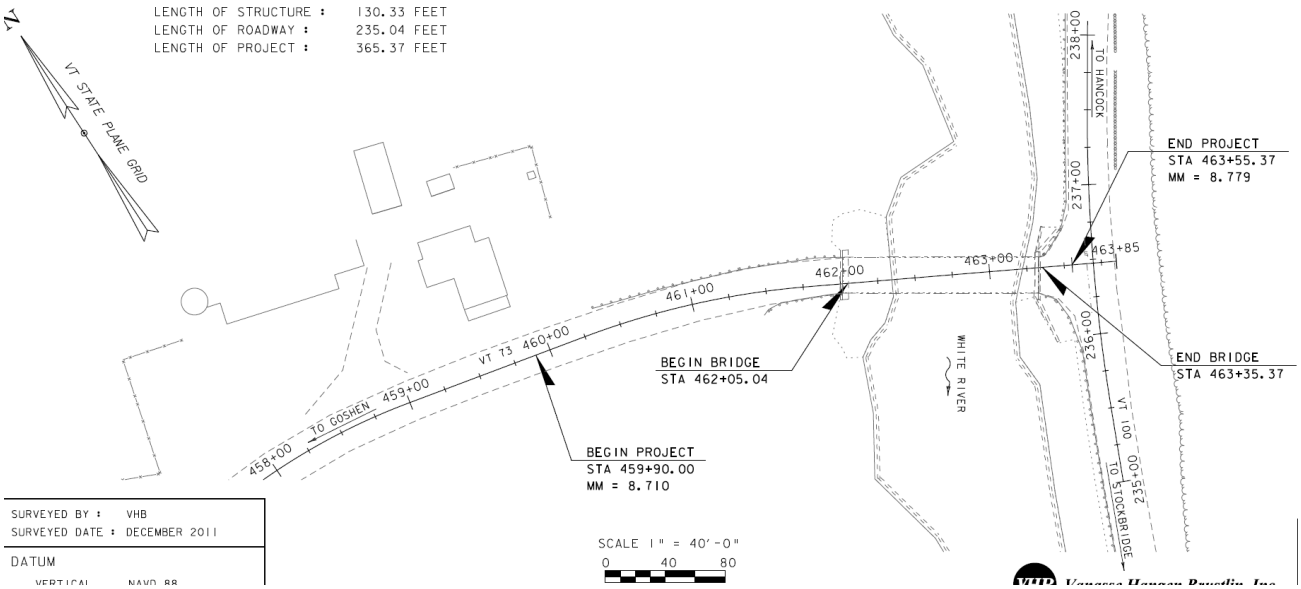

73
Brandon Mountain Rd
73
100
100

LOADING:

Temporary Bridge Superstructure Reaction Loads:

The Temporary Bridge superstructure is a prefabricated steel truss structure by others designed to the following specifications:

The reactions for the Temporary Bridge from the supplier are:

ACROW PANEL BRIDGE REACTIONS
PER CORNER OF BRIDGE

130 ft. x TSR3 — Design Truck : HS 20-44
24 ft. Roadway — Bridge Coating: 2" Asphalt Overlay

REACTION (KIPS):

Bridge Dead Load :	53
Bridge Coating :	20
HS 20-44 (w/ Ecc.) :	73
TOTAL (KIPS)	146
TRANSVERSE (WIND)	30

130ft * (0.45 klf) ÷ 2 SIDES = 29.25 kips

NOTE:
- MAX. REACTIONS GIVEN PER **CORNER** OF SPAN
- LOADS ARE **NOT** FACTORED FOR IMPACT
- ECCENTRICITY INCLUDED
- WIND BASED ON AASHTO MIN .450 KLF

$\mathbf{DL_{superstructure}}$ = 53k + 53k = **106k** per abutment

$\mathbf{DL_{coating}}$ = 20k + 20k = **40k** per abutment

LL = 73k + 73k = **146k** per abutment

The WL reactions are:

$\mathbf{WL_{bridge}}$ = 30k + 30k = 60k

And overturning from wind, the WL_{OT} reactions are:

$\mathbf{WL_{OT}}$ = (WL_{bridge} * Height/2) / Width = 60k distributed @ **10.2k** to the 2 leeward corners
Where:
Height = 8.17'
Width = 24.0'

Total bearing load of abutment is

$\mathbf{P_{abutment}}$ = $DL_{superstructure}$ + $DL_{coating}$ + LL + WL_{OT} = **302.2k** per abutment

WEST ABUTMENT:

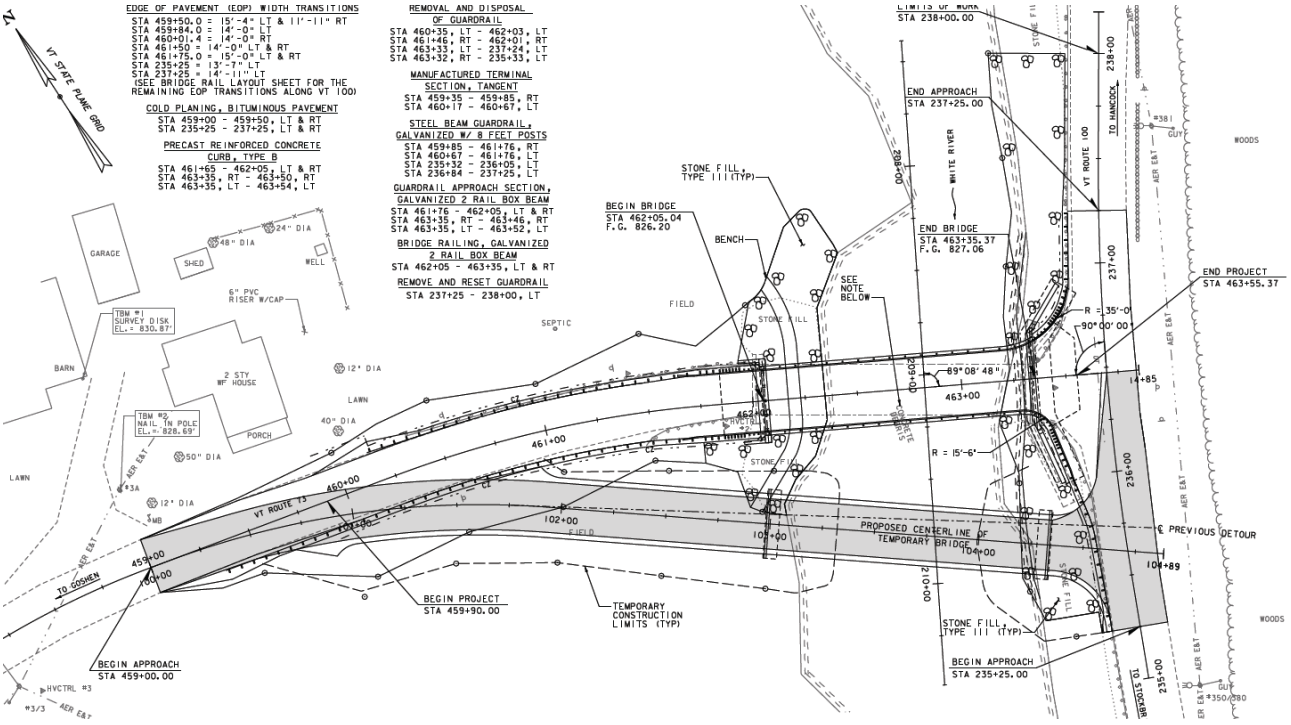

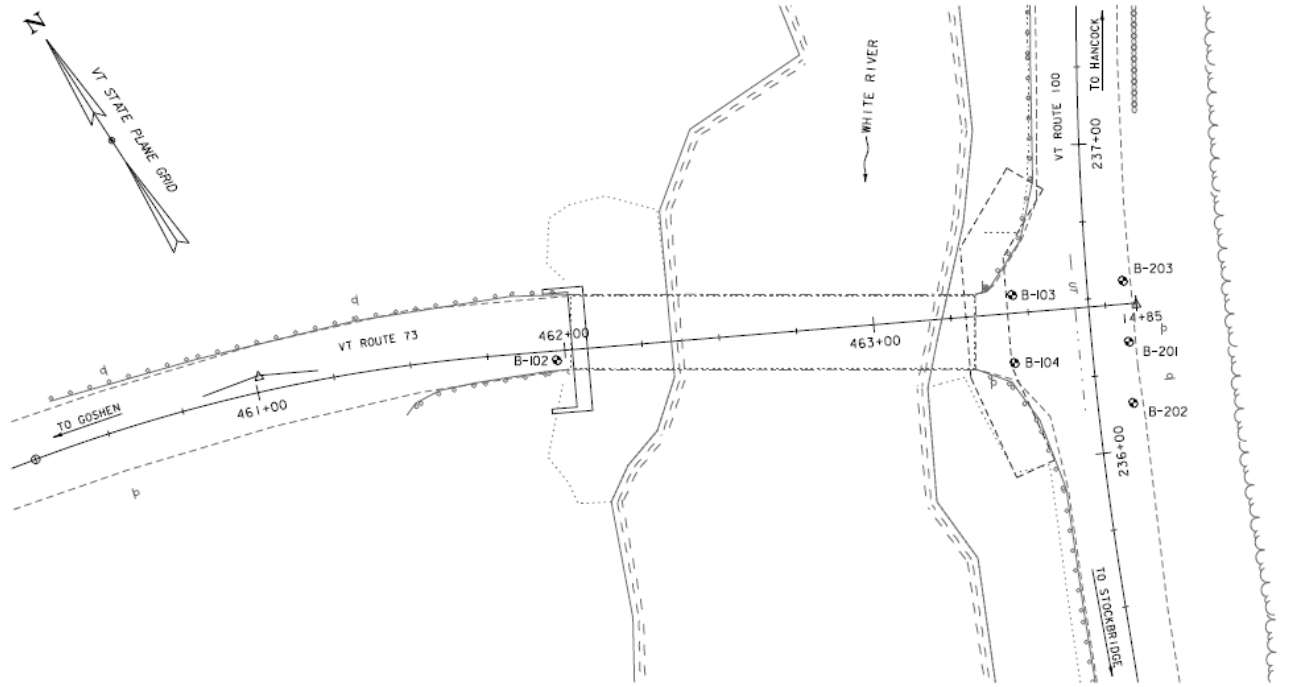

BORING CHART

BORING LAYOUT

The soil conditions are represented in the boring log for B-102

B-102: West End

STATE OF VERMONT
AGENCY OF TRANSPORTATION
MATERIALS & RESEARCH SECTION
SUBSURFACE INFORMATION

BORING LOG

ROCHESTER
ER-BRF 0162(18)
VT-73 BR-19

Boring No.: B-102
Page No.: 1 of 2
Pin No.: 11C332
Checked By: CEE

Boring Crew: SALISBURY, GARROW
Date Started: 3/27/12 Date Finished: 3/29/12
VTSPG NAD83: N 497119.90 ft E 1558458.40 ft
Station: 461+97.2 Offset: 2.99
Ground Elevation: 824.8 ft

	Casing	Sampler
Type:	WB	SS
I.D.:	4 in	1.5 in
Hammer Wt:	N.A.	140 lb.
Hammer Fall:	N.A.	30 in.
Hammer/Rod Type:	Auto/AWJ	
Rig:	CME 45C TRACK	C = 1.34

Groundwater Observations

Date	Depth (ft)	Notes
03/28/12	8.0	AM

EXISTING GRADE
EL 824.8

APPROXIMATE
ABUTMENT NO 1
BOTTOM PILE CAP
EL 814.0

BOE
EL 808.0

Depth (ft)	Strata (1)	CLASSIFICATION OF MATERIALS (Description)	Run (Dip deg.)	Core Rec. % (RQD %)	Drill Rate (min/ft)	Blows/6" (N Value)	Moisture Content %	Gravel %	Sand %	Fines %
		Asphalt Pavement, 0.0 ft - 0.5 ft								
		A-1-b, SaGr, brn, Moist, Rec. = 1.0 ft, NXDC				6-12-8-10 (20)	8.1	44.9	38.7	16.4
		A-1-a, SaGr, brn, Moist, Rec. = 1.0 ft, NXDC				5-13-13-12 (26)	7.4	54.9	32.4	12.7
5		A-1-b, SaGr, gm-brn, Moist, Rec. = 0.8 ft, NXDC				20-15-18-25 (33)	6.8	52.6	32.8	14.6
		Field Note:, No Recovery, Rock in sampler.				R@5.0"				
		Field Note:, NXDC, Cobbles								
10		A-1-a, SaGr, brn, Moist, Rec. = 1.3 ft, NXDC				12-22-23-18 (45)	9.8	52.4	35.1	12.5
		A-1-b, GrSa, brn, Moist, Rec. = 1.1 ft, NXDC				3-3-6-4 (14)	13.9	43.1	44.5	12.4
		A-1-b, GrSa, brn, Moist, Rec. = 1.1 ft, NXDC, Lost water return at 13.0 ft.				4-3-2-5 (5)	15.3	34.8	51.7	13.5
15		A-4, SlSa Varved, brn, Moist, Rec. = 1.3 ft, NXDC				3-2-2-4 (4)	33.2	[illegible]	[illegible]	[illegible]
		A-2-4, GrSa Varved, brn, Moist, Rec. = 1.0 ft, NXDC				3-2-2-4 (4)	27.9	43.0	45.9	11.1
20		A-1-b, SaGr, brn, Moist, Rec. = 1.0 ft, NXDC				7-8-5-4 (13)	12.8	48.5	42.6	8.9
		Field Note:, No Recovery, NXDC, Gravel				3-4-4-1 (8)				
		Field Note:, No Recovery, Rock in sampler.				5-5-5-5 (10)				
25		A-1-a, SaGr, brn, Moist, Rec. = 1.2 ft, NXDC				6-7-8-8 (15)	12.4	52.3	38.3	9.4
		A-2-4, GrSa, brn, Moist, Rec. = 1.1 ft, NXDC				6-4-5-8 (9)	17.2	26.8	54.7	18.5
30		A-1-b, GrSa, brn, Moist, Rec. = 0.8 ft, NXDC				6-6-4-5 (10)	15.1	32.8	57.4	9.8
		A-1-a, SaGr, brn, Moist, Rec. = 0.8 ft, NXDC				3-3-4-9 (7)	15.0	64.7	26.3	9.0
35										
		Field Note:, NXDC, Gravel								
		A-4, SlSa, brn, Moist, Rec. = 1.0 ft				6-5-6-7 (11)	25.4	0.2	63.4	36.4
40										
		A-2-4, Sa, brn, Moist, Rec. = 1.0 ft				3-4-4-5 (8)	26.3	7.4	75.7	16.9

DG 2 ROCHESTER ER-BRF 0162(18).GPJ VERMONT AOT.GDT 4/24/13

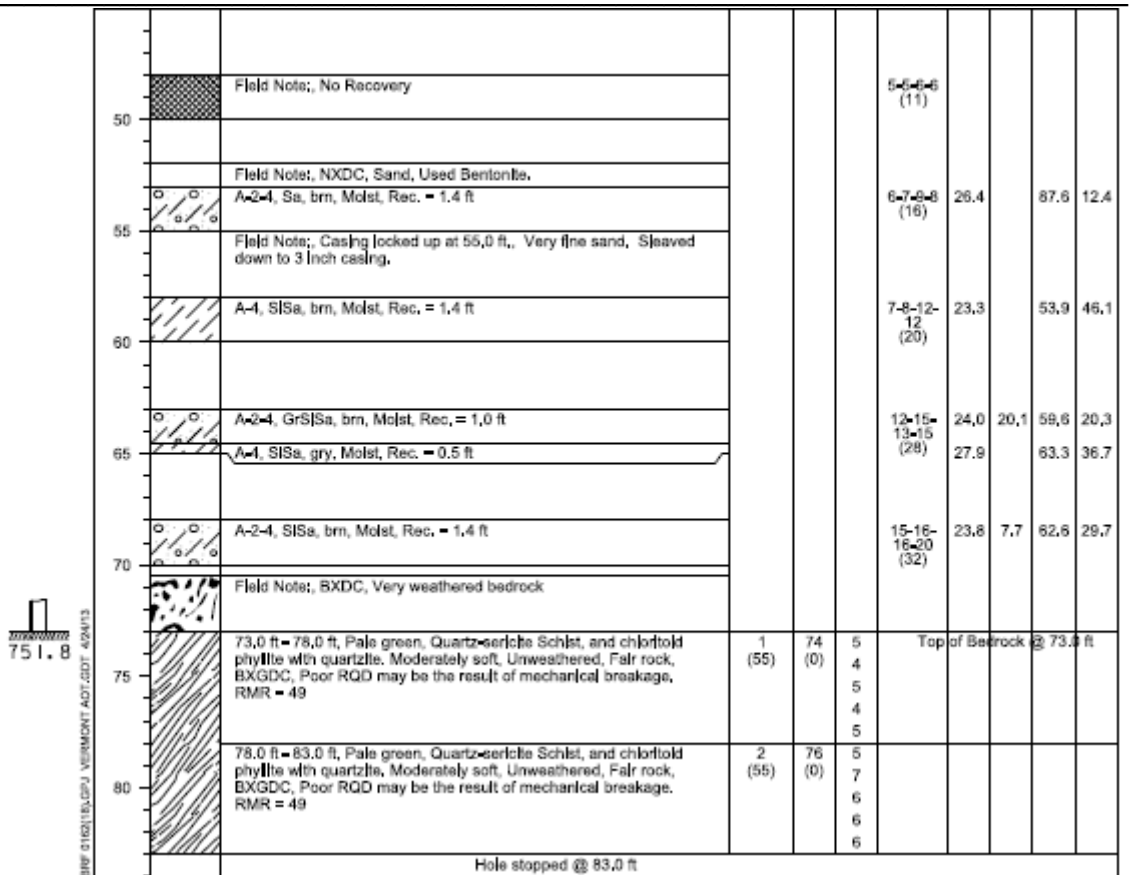

Elev.	Description								
50	Field Note:, No Recovery				5-6-6-6 (11)				
	Field Note:, NXDC, Sand, Used Bentonite.								
55	A-2-4, Sa, brn, Moist, Rec. = 1.4 ft				6-7-8-8 (16)	26.4		87.6	12.4
	Field Note:, Casing locked up at 55.0 ft,. Very fine sand, Sleaved down to 3 inch casing.								
60	A-4, SISa, brn, Moist, Rec. = 1.4 ft				7-8-12-12 (20)	23.3		53.9	46.1
65	A-2-4, GrSISa, brn, Moist, Rec. = 1.0 ft				12-15-13-15 (28)	24.0	20.1	59.6	20.3
	A-4, SISa, gry, Moist, Rec. = 0.5 ft					27.9		63.3	36.7
70	A-2-4, SISa, brn, Moist, Rec. = 1.4 ft				15-16-16-20 (32)	23.8	7.7	62.6	29.7
	Field Note:, BXDC, Very weathered bedrock								
75	73.0 ft - 78.0 ft, Pale green, Quartz-sericite Schist, and chloritoid phyllite with quartzite. Moderately soft, Unweathered, Fair rock, BXGDC, Poor RQD may be the result of mechanical breakage. RMR = 49	1 (55)	74 (0)	5 4 5 4 5	Top of Bedrock @ 73.0 ft				
80	78.0 ft - 83.0 ft, Pale green, Quartz-sericite Schist, and chloritoid phyllite with quartzite. Moderately soft, Unweathered, Fair rock, BXGDC, Poor RQD may be the result of mechanical breakage. RMR = 49	2 (55)	76 (0)	5 7 6 6 6					
	Hole stopped @ 83.0 ft								

Assume

$\gamma_{soil\ exist}$ = 110pcf
$\gamma_{soil\ fill}$ = 140pcf
θ_{fill} = 38°
s_{brg} = 3tsf = 6000psf

Fill:

1. Granular Fill shall consist of stones, rock fragments, and fine, hard durable particles resulting from the natural disintegration of rock.
2. The material shall be free from injurious amounts of organic matter.
3. Not more than 15% of the material passing the No. 4 sieve shall pass the No. 200 sieve and the material shall conform to the following gradations unless otherwise noted:

Sieve Size	% by Weight
3 inch	100
No. 4	70 - 100

4. Structural Fill shall consist of crushed gravel and shall meet fhr following specifications unless otherwise noted:

Sieve Size	% by Weight
3 inch	100
2 inch	95 - 100

1 inch	55 - 85
No. 4	27 - 52
No. 200	0 - 12 (based on the % passing the No.4)

Abutment 1 Design:

Criteria

Retained Height	=	3.25 ft
Wall height above soil	=	0.00 ft
Slope Behind Wall	=	0.00 : 1
Height of Soil over Toe	=	0.00 in
Water height over heel	=	0.0 ft

Soil Data

Allow Soil Bearing	=	6,000.0	psf
Rankine Soil Presure calculation			
Soil Friction Angle	=	38.0	deg
Active Pressure:Ka*Gamma	=	33.3	psf/ft
Passive Pressure:Kp*Gan	=	588.5	psf/ft
Soil Density, Heel	=	140.00	pcf
Soil Density, Toe	=	110.00	pcf
Footing||Soil Friction	=	0.400	
Soil height to ignore for passive pressure	=	12.00	in

Surcharge Loads

Surcharge Over Heel	=	300.0 psf
Used To Resist Sliding & Overturning		
Surcharge Over Toe	=	0.0 psf
Used for Sliding & Overturning		

Lateral Load Applied to Stem

Lateral Load	=	0.0 #/ft
...Height to Top	=	0.00 ft
...Height to Bottom	=	0.00 ft
The above lateral load has been increased by a factor of		1.00
Wind on Exposed Stem	=	0.0 psf

Adjacent Footing Load

Adjacent Footing Load	=	0.0 lbs
Footing Width	=	0.00 ft
Eccentricity	=	0.00 in
Wall to Ftg CL Dist	=	0.00 ft
Footing Type		Line Load
Base Above/Below Soil at Back of Wall	=	0.0 ft
Poisson's Ratio	=	0.300

Axial Load Applied to Stem

Axial Dead Load	=	3,395.0 lbs
Axial Live Load	=	3,395.0 lbs
Axial Load Eccentricity	=	11.0 in

Design Summary

Wall Stability Ratios

Overturning	=	6.54	OK
Sliding	=	3.72	OK
Total Bearing Load	=	8,749 lbs	
...resultant ecc.	=	1.60 in	
Soil Pressure @ Toe	=	2,624 psf	OK
Soil Pressure @ Heel	=	1,750 psf	OK
Allowable	=	6,000 psf	
Soil Pressure Less Than Allowable			
ACI Factored @ Toe	=	3,535 psf	
ACI Factored @ Heel	=	2,358 psf	
Footing Shear @ Toe	=	8.4 psi	OK
Footing Shear @ Heel	=	0.0 psi	OK
Allowable	=	82.2 psi	

Sliding Calcs (Vertical Component Used)

Lateral Sliding Force	=	896.2 lbs
less 100% Passive Force	= -	1,195.4 lbs
less 100% Friction Force	= -	2,141.8 lbs
Added Force Req'd	=	0.0 lbs OK
....for 1.5 : 1 Stability	=	0.0 lbs OK

Load Factors

Building Code	AASHTO LRFD
Dead Load	1.250
Live Load	1.500
Earth, H	1.750
Wind, W	1.400
Seismic, E	1.000

Stem Construction

Top Stem

		Stem OK
Design Height Above Ftg	ft =	0.00
Wall Material Above "Ht"	=	Concrete
Thickness	=	15.00
Rebar Size	=	# 5
Rebar Spacing	=	12.00
Rebar Placed at	=	Edge

Design Data

fb/FB + fa/Fa	=	**0.531**
Total Force @ Section	lbs =	713.7
Moment....Actual	ft-# =	9,551.2
Moment.....Allowable	=	17,971.3
Shear.....Actual	psi =	4.5
Shear.....Allowable	psi =	82.2
Wall Weight	=	187.5
Rebar Depth 'd'	in =	13.19
LAP SPLICE IF ABOVE	in =	21.36
LAP SPLICE IF BELOW	in =	
HOOK EMBED INTO FTG	in =	9.59

Masonry Data

f'm	psi =	
Fs	psi =	
Solid Grouting	=	
Use Half Stresses	=	
Modular Ratio 'n'	=	
Short Term Factor	=	
Equiv. Solid Thick.	=	
Masonry Block Type	=	Medium Weight
Masonry Design Method	=	ASD

Concrete Data

f'c	psi =	3,000.0
Fy	psi =	60,000.0

Footing Dimensions & Strengths

Toe Width	=	2.75 ft
Heel Width	=	1.25
Total Footing Width	=	4.00
Footing Thickness	=	27.00 in
Key Width	=	0.00 in
Key Depth	=	0.00 in
Key Distance from Toe	=	2.75 ft

f'c = 3,000 psi Fy = 60,000 psi
Footing Concrete Density = 150.00 pcf
Min. As % = 0.0018
Cover @ Top 2.00 @ Btm.= 3.00 in

Footing Design Results

		Toe	Heel	
Factored Pressure	=	3,535	2,358	psf
Mu' : Upward	=	12,346	0	ft-#
Mu' : Downward	=	1,595	0	ft-#
Mu: Design	=	10,751	0	ft-#
Actual 1-Way Shear	=	8.41	0.00	psi
Allow 1-Way Shear	=	82.16	0.00	psi
Toe Reinforcing	=	# 4 @ 18.00 in		
Heel Reinforcing	=	# 4 @ 18.00 in		
Key Reinforcing	=	# 7 @ 14.00 in		

Other Acceptable Sizes & Spacings

Toe: Not req'd, Mu < S * Fr
Heel: Not req'd, Mu < S * Fr
Key: No key defined

Summary of Overturning & Resisting Forces & Moments

Item		.....OVERTURNING..... Force lbs	Distance ft	Moment ft-#
Heel Active Pressure	=	503.7	1.83	923.5
Surcharge over Heel	=	392.5	2.75	1,079.4
Surcharge Over Toe	=			
Adjacent Footing Load	=			
Added Lateral Load	=			
Load @ Stem Above Soil	=			
	=			
Total		896.2	**O.T.M.**	2,002.9
	=		=	

Resisting/Overturning Ratio = **6.54**
Vertical Loads used for Soil Pressure = 8,749.4 lbs

		.....RESISTING..... Force lbs	Distance ft	Moment ft-#
Soil Over Heel	=		4.00	
Sloped Soil Over Heel	=			
Surcharge Over Heel	=		4.00	
Adjacent Footing Load	=			
Axial Dead Load on Stem	=	3,395.0	2.46	8,346.0
* Axial Live Load on Stem	=	3,395.0	2.46	8,346.0
Soil Over Toe	=			
Surcharge Over Toe	=			
Stem Weight(s)	=	609.4	3.38	2,056.6
Earth @ Stem Transitions	=			
Footing Weight	=	1,350.0	2.00	2,700.0
Key Weight	=		2.75	
Vert. Component	=			
	Total =	5,354.4 lbs	**R.M.=**	13,102.7

* Axial live load NOT included in total displayed, or used for overturning resistance, but is included for soil pressure calculation.

Footings:

1. Bottom of footing elevations given are minimum depths, and are not to be construed as limiting the excavation required to reach good bearing soil.
2. Footing and slab subgrades shall not be allowed to freeze. In the event that frost penetration does occur, all frozen soils shall be removed and replaced with compacted structural fill.

Concrete:

1. Portland Cement for concrete shall be in accordance with ASTM C 150, Type I or Type II.
2. Cement used for all concrete shall be of the same type.
3. Aggregates for concrete shall conform to ASTM C33.
4. Concrete shall conform to American Concrete Institute ACI Standard 318.
5. Concrete shall be fc' = 3,000 psi unless otherwise indicated.

Reinforcing Steel:

1. Reinforcing steel shall be in accordance with ASTM A615 Grade 60 or better unless otherwise noted.
2. Fabrication shall be in accordance with American Concrete Institute Standard ACI 318-08.
3. There shall be no welding of reinforcing steel.

4. Placement of reinforcing steel shall be in accordance with the American Concrete Institute Standard ACI 318-08.
5. Splicing of reinforcing steel shall be in accordance with the American Concrete Institute Standard ACI 318-08.
6. Cover on reinforcing steel shall be in accordance with the American Concrete Institute Standard ACI 318-08.
7. Reinforcing Steel is to be bent cold.
8. Reinforcing Steel is to be bent to bend radii no less than 6 bar diameters for #3 through #8 bars, 8 bar diameters for #9 through #11 bars, and 10 bar diameters for #14 and #18 bars.
9. Provide 3" cover for reinforcing steel where cast against the ground, 2" cover against a form, and 2" cover against top unformed surface.

EAST ABUTMENT:

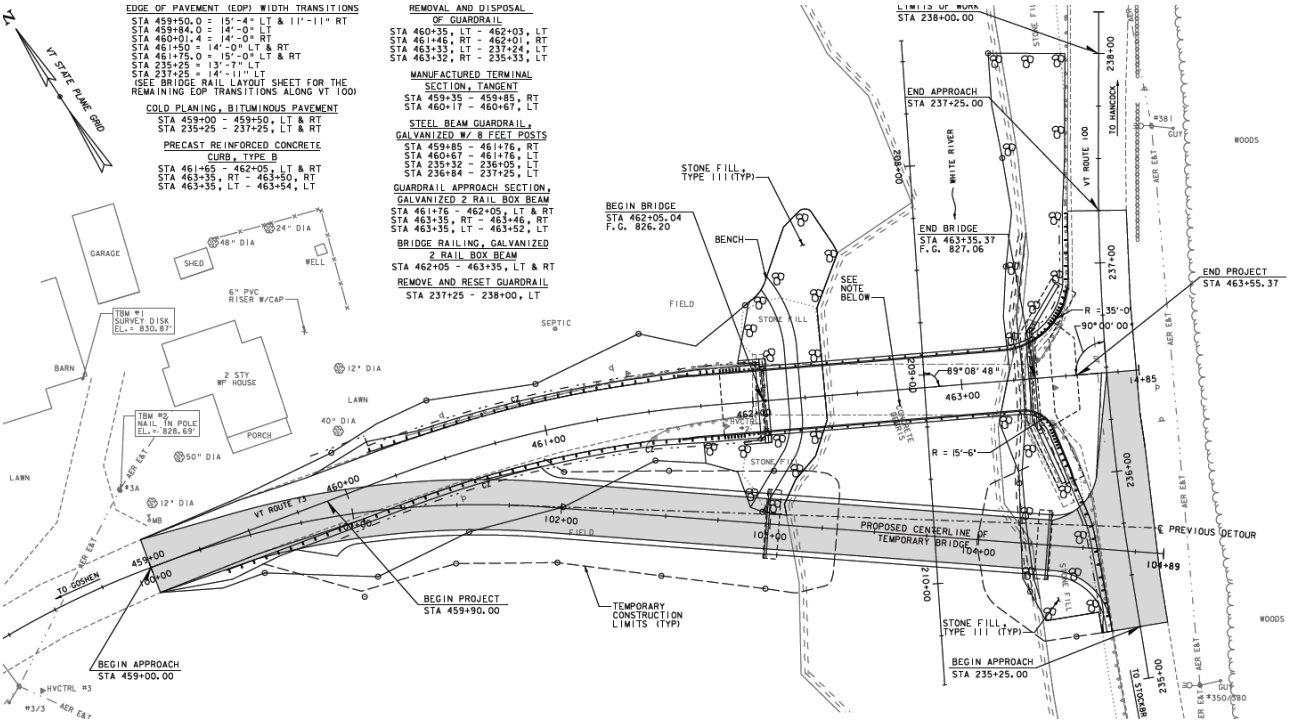

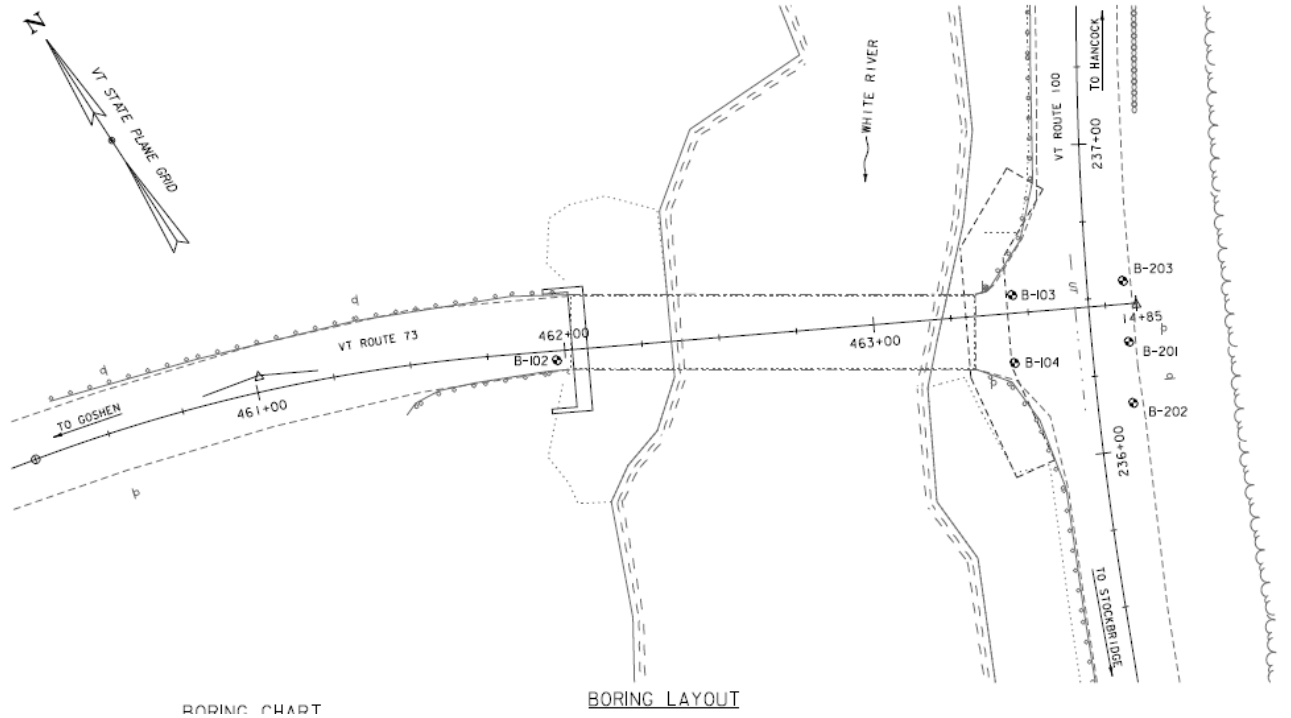

BORING CHART

BORING LAYOUT

The soil conditions are represented in the boring log for B-103 & B-104.

B-103: East End

STATE OF VERMONT
AGENCY OF TRANSPORTATION
MATERIALS & RESEARCH SECTION
SUBSURFACE INFORMATION

BORING LOG
ROCHESTER
ER-BRF 0162(18)
VT-73 BR-19

Boring No.: B-103
Page No.: 1 of 1
Pin No.: 11C332
Checked By: CEE

Boring Crew: SALISBURY, GARROW
Date Started: 3/27/12 Date Finished: 3/28/12
VTSPG NAD83: N 497057.50 ft E 1558593.00 ft
Station: 463+45.3 Offset: -5.86
Ground Elevation: 826.6 ft

	Casing	Sampler
Type:	WB	SS
I.D.:	4 in	1.5 in
Hammer Wt:	N.A.	140 lb.
Hammer Fall:	N.A.	30 in.
Hammer/Rod Type:	Auto/AWJ	
Rig:	CME 45C TRACK	C_n = 1.34

Groundwater Observations

Date	Depth (ft)	Notes
03/27/12	7.4	AM

EXISTING GRADE
EL 826.6

APPROXIMATE
ABUTMENT NO 2
TOP OF FOOTING
EL 806.0

BOE
EL 804.0

L EL 804±

Depth (ft)	Strata (1)	CLASSIFICATION OF MATERIALS (Description)	Run (Dip deg.)	Core Rec. % (RQD %)	Drill Rate minutes/ft	Blows/6" (N Value)	Moisture Content %	Gravel %	Sand %	Fines %
		Asphalt Pavement, 0.0 ft - 1.3 ft								
		A-1-b, SaGr, brn, Moist, Rec. = 1.0 ft				5-5-6-10 (11)	10.7	44.3	41.3	14.4
5		A-1-b, SaGr, brn, Moist, Rec. = 0.7 ft				2-4-4-3 (8)	15.7	54.7	27.0	18.3
		A-2-4, SlGrSa, brn, Moist, Rec. = 1.0 ft				6-3-2-3 (5)	17.3	29.0	49.8	21.2
		A-2-4, GrSa, brn, Moist, Rec. = 0.7 ft				3-3-3-3 (6)	12.4	31.8	50.7	17.5
10		A-2-4, GrSa, brn, Moist, Rec. = 0.7 ft				3-2-3-2 (5)	12.6	29.2	56.9	13.9
		A-1-b, GrSa, brn, Moist, Rec. = 0.3 ft, Broken Rock was within sample. Advanced casing.				R@3.5"	14.1	29.3	56.4	14.3
		Field Note:, NXMDC, Boulders								
15		Field Note:, Possible Void								
		Field Note:, NXMDC, Boulders								
20		Field Note:, Possible Void								
		A-1-b, Weathered Rock with Sandy Gravel, brn, Moist, Rec. = 0.8 ft				4-5-R@6.0"	11.4	49.0	34.4	16.6
25		24.0 ft - 29.0 ft, Gray, Grading to pale green quartz-sericite Schist, with quartzite. Medium hard, Unweathered, Fair rock, NXMDC, RMR = 59	1 (55)	86 (54)	8 5 6 5 5	Top of Bedrock @ 24.0 ft				
30		29.0 ft - 34.0 ft, Pale green, Quartz-sericite Schist, with quartzite. Moderately hard, Unweathered, Good rock, NXMDC, RMR = 63	2 (55)	94 (86)	5 7 7 7 8					
35		Hole stopped @ 34.0 ft								

T.AOT.GDT 4/24/13

B-104: East End

STATE OF VERMONT
AGENCY OF TRANSPORTATION
MATERIALS & RESEARCH SECTION
SUBSURFACE INFORMATION

BORING LOG
ROCHESTER
ER-BRF 0162(18)
VT-73 BR-19

Boring No.: B-104
Page No.: 1 of 1
Pin No.: 11C332
Checked By: CEE

Boring Crew: SALISBURY, GARROW
Date Started: 3/27/12 Date Finished: 3/27/12
VTSPG NAD83: N 497038.70 ft E 1558581.80 ft
Station: 463+44.4 Offset: 16.00
Ground Elevation: 826.7 ft

	Casing	Sampler
Type:	WB	SS
I.D.:	4 in	1.5 in
Hammer Wt:	N.A.	140 lb.
Hammer Fall:	N.A.	30 in.
Hammer/Rod Type:	Auto/AWJ	
Rig:	CME 45C TRACK	C. = 1.34

Groundwater Observations		
Date	Depth (ft)	Notes
		None Taken.

EXISTING GRADE
EL 826.7

APPROXIMATE
ABUTMENT NO 2
TOP OF FOOTING
EL 806.0

BOE
EL 804.0

L EL 803±

Depth (ft)	Strata (1)	CLASSIFICATION OF MATERIALS (Description)	Run (Dip deg.)	Core Rec. % (RQD %)	Drill Rate minutes/ft	Blows/6" (N Value)	Moisture Content %	Gravel %	Sand %	Fines %
		Asphalt Pavement, 0.0 ft - 1.1 ft								
		Field Note:, NXDC, Gravel A-1-b, GrSa, brn, Moist, Rec. = 0.8 ft				5-5-4-4 (9)	10.3	34.7	50.9	14.4
5										
		Field Note:, NXDC, Gr Sa Sl A-2-4, GrSa, brn, Moist, Rec. = 0.8 ft				3-2-3-3 (5)	12.9	20.3	61.2	18.5
10										
		Field Note:, NXDC, Gravel A-1-b, SaGr, brn, Moist, Rec. = 1.0 ft, Broken Rock was within sample.				3-4-14-12 (18)	9.1	57.7	31.8	10.5
15										
		Field Note:, Possible Void Field Note:, NXDC, Possible Silt Visual Description, Large chunks of Wood with sand & gravel, brn, Moist, Rec. = 0.5 ft				8-3-5-8 (8)				
20										
		Field Note:, NXDC A-1-a, Weathered Rock with Sand & Gravel, brn, Moist, Rec. = 1.1 ft				10-8-7-17 (15)	8.8	58.5	28.2	13.3
25		25.5 ft - 30.5 ft, Pale green, Quartz-sericite Schist, and chloritoid phyllite with quartzite. Moderately soft to moderately hard, Unweathered, Fair rock, NXMDC, RMR = 54	1 (55)	100 (40)	5 6 8 6 6	Top of Bedrock @ 25.5 ft				
30		30.5 ft - 35.5 ft, Pale green, Quartz-sericite Schist, with quartzite. Moderately hard, Unweathered, Fair rock, NXMDC, Severely weathered vug at 32.7 feet. RMR = 59	2 (55)	100 (64)	5 6 4 5 6					
35		Hole stopped @ 35.5 ft								

MONT AOT_GDT 4/24/13

Assume

$\gamma_{soil\ exist} = 110pcf$

$\gamma_{soil\ fill} = 140pcf$

$\theta_{fill} = 38°$

$s_{brg} = 3tsf = 6000psf$

Abutment 2 Design:

Criteria

Retained Height	=	3.25 ft
Wall height above soil	=	0.00 ft
Slope Behind Wall	=	0.00 : 1
Height of Soil over Toe	=	0.00 in
Water height over heel	=	0.0 ft

Soil Data

Allow Soil Bearing	=	6,000.0	psf
Rankine Soil Presure calculation			
Soil Friction Angle	=	38.0	deg
Active Pressure:Ka*Gamma	=	33.3	psf/ft
Passive Pressure:Kp*Gan	=	588.5	psf/ft
Soil Density, Heel	=	140.00	pcf
Soil Density, Toe	=	110.00	pcf
Footing||Soil Friction	=	0.400	
Soil height to ignore for passive pressure	=	12.00	in

Surcharge Loads

Surcharge Over Heel	=	300.0 psf
Used To Resist Sliding & Overturning		
Surcharge Over Toe	=	0.0 psf
Used for Sliding & Overturning		

Lateral Load Applied to Stem

Lateral Load	=	0.0 #/ft
...Height to Top	=	0.00 ft
...Height to Bottom	=	0.00 ft
The above lateral load has been increased by a factor of		1.00
Wind on Exposed Stem	=	0.0 psf

Adjacent Footing Load

Adjacent Footing Load	=	0.0 lbs
Footing Width	=	0.00 ft
Eccentricity	=	0.00 in
Wall to Ftg CL Dist	=	0.00 ft
Footing Type		Line Load
Base Above/Below Soil at Back of Wall	=	0.0 ft
Poisson's Ratio	=	0.300

Axial Load Applied to Stem

Axial Dead Load	=	3,395.0 lbs
Axial Live Load	=	3,395.0 lbs
Axial Load Eccentricity	=	11.0 in

Design Summary

Wall Stability Ratios

Overturning	=	6.54	OK
Sliding	=	3.72	OK
Total Bearing Load	=	8,749 lbs	
...resultant ecc.	=	1.60 in	
Soil Pressure @ Toe	=	2,624 psf	OK
Soil Pressure @ Heel	=	1,750 psf	OK
Allowable	=	6,000 psf	
Soil Pressure Less Than Allowable			
ACI Factored @ Toe	=	3,535 psf	
ACI Factored @ Heel	=	2,358 psf	
Footing Shear @ Toe	=	8.4 psi	OK
Footing Shear @ Heel	=	0.0 psi	OK
Allowable	=	82.2 psi	

Sliding Calcs (Vertical Component Used)

Lateral Sliding Force	=	896.2 lbs
less 100% Passive Force	= -	1,195.4 lbs
less 100% Friction Force	= -	2,141.8 lbs
Added Force Req'd	=	0.0 lbs OK
....for 1.5 : 1 Stability	=	0.0 lbs OK

Load Factors

Building Code	AASHTO LRFD
Dead Load	1.250
Live Load	1.500
Earth, H	1.750
Wind, W	1.400
Seismic, E	1.000

Stem Construction

Top Stem

		Stem OK
Design Height Above Ftg	ft =	0.00
Wall Material Above "Ht"	=	Concrete
Thickness	=	15.00
Rebar Size	=	# 5
Rebar Spacing	=	12.00
Rebar Placed at	=	Edge

Design Data

fb/FB + fa/Fa	=	**0.531**
Total Force @ Section	lbs =	713.7
Moment....Actual	ft-# =	9,551.2
Moment.....Allowable	=	17,971.3
Shear.....Actual	psi =	4.5
Shear.....Allowable	psi =	82.2
Wall Weight	=	187.5
Rebar Depth 'd'	in =	13.19
LAP SPLICE IF ABOVE	in =	21.36
LAP SPLICE IF BELOW	in =	
HOOK EMBED INTO FTG	in =	9.59

Masonry Data

f'm	psi =	
Fs	psi =	
Solid Grouting	=	
Use Half Stresses	=	
Modular Ratio 'n'	=	
Short Term Factor	=	
Equiv. Solid Thick.	=	
Masonry Block Type	=	Medium Weight
Masonry Design Method	=	ASD

Concrete Data

f'c	psi =	3,000.0
Fy	psi =	60,000.0

Footing Dimensions & Strengths

Toe Width	=	2.75 ft
Heel Width	=	1.25
Total Footing Width	=	4.00
Footing Thickness	=	27.00 in
Key Width	=	0.00 in
Key Depth	=	0.00 in
Key Distance from Toe	=	2.75 ft

f'c = 3,000 psi Fy = 60,000 psi
Footing Concrete Density = 150.00 pcf
Min. As % = 0.0018
Cover @ Top 2.00 @ Btm.= 3.00 in

Footing Design Results

		Toe	Heel	
Factored Pressure	=	3,535	2,358	psf
Mu' : Upward	=	12,346	0	ft-#
Mu' : Downward	=	1,595	0	ft-#
Mu: Design	=	10,751	0	ft-#
Actual 1-Way Shear	=	8.41	0.00	psi
Allow 1-Way Shear	=	82.16	0.00	psi

Toe Reinforcing = # 4 @ 18.00 in
Heel Reinforcing = # 4 @ 18.00 in
Key Reinforcing = # 7 @ 14.00 in

Other Acceptable Sizes & Spacings

Toe: Not req'd, Mu < S * Fr
Heel: Not req'd, Mu < S * Fr
Key: No key defined

Summary of Overturning & Resisting Forces & Moments

Item		.....OVERTURNING..... Force lbs	Distance ft	Moment ft-#
Heel Active Pressure	=	503.7	1.83	923.5
Surcharge over Heel	=	392.5	2.75	1,079.4
Surcharge Over Toe	=			
Adjacent Footing Load	=			
Added Lateral Load	=			
Load @ Stem Above Soil	=			
	=			
Total		896.2	**O.T.M.**	2,002.9
	=		=	

Resisting/Overturning Ratio = **6.54**
Vertical Loads used for Soil Pressure = 8,749.4 lbs

		.....RESISTING..... Force lbs	Distance ft	Moment ft-#
Soil Over Heel	=		4.00	
Sloped Soil Over Heel	=			
Surcharge Over Heel	=		4.00	
Adjacent Footing Load	=			
Axial Dead Load on Stem	=	3,395.0	2.46	8,346.0
* Axial Live Load on Stem	=	3,395.0	2.46	8,346.0
Soil Over Toe	=			
Surcharge Over Toe	=			
Stem Weight(s)	=	609.4	3.38	2,056.6
Earth @ Stem Transitions	=			
Footing Weight	=	1,350.0	2.00	2,700.0
Key Weight	=		2.75	
Vert. Component	=			
Total	=	5,354.4 lbs	**R.M.=**	13,102.7

* Axial live load NOT included in total displayed, or used for overturning resistance, but is included for soil pressure calculation.

Anchors:

Bridge shoes are to be held in place with anchors into the concrete bridge abutments. From the superstructure reactions provided by the mfr,

V = 30k per corner

Anchor Studs, Four 7/8"dia Threaded Studs per shoe, Steel, ASTM A307;

F_y = 36ksi
F_v = 11.0ksi [AASHTO Table 10.32.3A]
A_{bolt} = 0.845in²
N = 4 bolts/shoe * 3 shoes/corner = 12 bolts/corner

f_v = V/NA = 2.96ksi < 11.0ksi OK

Transom Bolster:

The superstructure design calls for a transom bolster to support the end transoms at their midspans against deflection at the backwalls. This will be accomplished by fixing a timber block bearing on the abutment bridge seat and bottom flange of the end transoms at midspan.

Bolster, 12 x Cut-To-Fit x 3' long Bearing Block, Timber, SYP No.1 Or Equal;

Assume the full load of two wheels of the HS20 loading will be resisted by the bolster.

C = 2 * 16k = 32k
$b_{transom\ flange}$ = W24x76 = 8.99"
L_{block} = 3.0' = 36"
A_{brg} = Lb = 324in²

Based on NDS and subject to adjustment factors,

F_b =	1,350	psi		[ASD Table4D]
F_t =	900	psi		
F_v =	165	psi		
F_{cperp} =	375	psi		
F_{cpara} =	800	psi		
E =	1,300,000	psi		
E_{min} =	470,000	psi		
C_D = Duration =	impact	instant	2.00	[ASD Table 2.3.2]

C_M =Wet Service >19% ("wet"/"dry")		wet		[ASD Table 4A]
for F_b =			1.00	
for F_bC_F =	999	psi		
for F_t =	``		1.00	
for F_v =			0.97	
for F_{cperp} =			0.67	
for F_{cpara} =			0.80	
for F_cC_F =	800	psi		
for E =			0.90	
C_t =Temperature Factor =			1.00	[ASD Table 2.3.3]
C_L =Beam Stability Factor =			1.00	[ASD 3.3.3]
where				
b =		12.00	in	
d =		12.00	in	
ℓ_u =		3.00	ft	
ℓ_e =		3.33	ft	
E_{min}' =		474,901	psi	[ASD Appx D.4]
for COV_E =		0.25		[ASD Appx F.4]
F_b^* =		2,700	psi	
$R_B = (\ell_e d/b^2)^{1/2}$ =		0.5268		
$F_{bE} = 1.20E_{min}'/R_B^2$ =		2,053,627	psi	
$F_b' = F_b^*C_L = F_b^*\{(1+F_{bE}/F_b^*)/1.9 - [((1+F_{bE}/F_b^*)/1.9)^2-F_{bE}/F_b^*/0.95]^{1/2}\}$ =				
=		2,700	psi	
C_F = Size Factor				[ASD 4.3.6]
for F_b =			0.74	
for F_t =			1.00	
for F_{cpara} =			1.00	
C_{fu} = Flat Use = 1.05			1.15	[ASD Table 4A]
C_i = Incising ("yes"/"no")		no		[ASD Table 4.3.8]

for F_b =		1.00	
for F_t =		1.00	
for F_v =		1.00	
for F_{cperp} =		1.00	
for F_{cpara} =		1.00	
for E =		1.00	
C_r = Repetitive Member ("yes"/"no")	no	1.00	[ASD 4.3.9]
C_b = Bearing Area Factor =		1.00	[ASD Table 3.10.4]
$C_{Fb} = C_D * C_M * C_t * C_L * C_F * C_{fu} * C_i * C_r$ =		1.702	
$C_{Ft} = C_D * C_M * C_t * C_F * C_i$ =		2.000	
$C_{Fv} = C_D * C_M * C_t * C_i$ =		1.940	
$C_{Fcperp} = C_M * C_t * C_i * C_b$ =		0.670	
$C_{Fcpara} = C_D * C_M * C_t * C_F * C_i * C_p$ =		1.600	
$E = C_M * C_t * C_i$ =		0.900	
$E_{min} = C_M * C_t * C_i * C_T$ =		0.900	

Applying the above factors as and the condition and construction factors,

Condition Factor =	1.00	assumed
Construction Factor =	1.00	non-specified

F_{cperp}'
= 251 psi = **0.251 ksi**

$f_{c\ perep}$ = C/A = 0.0987ksi < 0.251ksi OK

Addressed Reviewer Comments dated April 7, 2014:

COMMENT:
1. Verify location of temporary abutments. From plan view, abutments look to have shifted to the east (towards VT 100). This may have adverse effect on the turning radius at VT 73 and VT 100.

The temporary bridge location shown is correct as proposed by the GC.

COMMENT:
2. On Bridge Elevation, label the vertical clearance above streambed and waterway area of full opening (waterway opening shall comply with requirements as shown on the Preliminary Information Sheet (sheet 175) in the Contract Plans).

From the Contract Plans sheet 175,

TEMPORARY BRIDGE REQUIREMENTS

STRUCTURE TYPE:	Acrow Thru Truss	
CLEAR SPAN (NORMAL TO STREAM):	124'-0"	
VERTICAL CLEARANCE ABOVE STREAMBED:		17.67 ft
WATERWAY AREA OF FULL OPENING:	1815 sf	

The vertical clearance above streambed is a function of the temporary bridge superstructure span, slope, bearing elevations, cross section, deflection and sag and should, therefore, be determined established in the temporary bridge superstructure design. This substructure design document incorporates the bridge seat elevations dictated in the by the superstructure design document.

The clear span and waterway full opening have been added to the plan.

COMMENT:
3. Under "Temporary Bridge Abutments" notes, verify existing soil weight and angle under #7 (shoring submittal by GSI dated 2/23/2014 lists soil angle to be 34 º).

The soil angle θ_{fill} = 38° is that of the granular fill backfill material for the abutments. This is not an uncommon assumption for compacted granular fill specified. The assumptions relative to the existing material are $\gamma_{soil\ exist}$ = 110pcf and s_{brg} = 6000psf. The boring logs indicate medium density sandy gravel and gravelly sand materials. A reasonable assumption for sand material of medium density would be a soil angle of 34°, which is compatable with the assumptions in the shoring submittal as referenced. A soil weight of 110pcf and bearing capacity of 4tsf are reasonable assumptions. A factor of 75% is applied as a reduction for sloped conditions, 75%*4tsf = 3tsf = 6000psf. The design assumptions are for no backfill over toe.

COMMENTS:
4. For temporary Bridge Abutment 2, verify that revised Abutment and Wingwall configuration allows for proper turning radius. A turning analysis was performed on the

revised temporary bridge layout as provided on March 7, 2014. The results of that analysis show that the turning movements worked marginally with the bridge configuration. The proposed abutment locations from this submittal are closer to VT 100. Please demonstrate that the turning movements work for the proposed abutment and wingwall configuration.

Further investigation by the GC and reviewing authority established a recommended temporary bridge configuration. The temporary bridge abutments have been relocated to accommodate the recommended configuration. The documents and drawings have been revised to reflect this change.

COMMENT:
5. Sheet 13 in the PDF states “The reactions for the Pedestrian Bridge from the supplier are”. Verify reactions are correct (this is not a pedestrian bridge).

The reactions are correct. The erroneous word “Pedestrian” has been changed to “Temporary”.