Drawing Sheet : 19-AB-R01						BAR LIST												
Bar Mark	Qty	Size	Total Length	Type	'A'	'B'	'C'	'D'	'E'	'F'	'G'	'H'	'J'	'K'	'O'	'R'
5A01	60	#5	8'-10"	17		3'-2"	2'-6"	3'-2"								
5A04	287	#5	4'-4"	17		10"	2'-8"	10"								
5A06	16	#5	11'-4 $\frac{1}{2}$"	3			1'-6"	8'-4 $\frac{1}{2}$"	1'-6"			1'-1 $\frac{1}{2}$"		1'-4"	10'-5 $\frac{1}{2}$"	
5A07	16	#5	4'-4"	17		2'-2"	2'-2"									
5A02	60	#5	8'-10"	17		3'-2"	2'-6"	3'-2"								
5A03	164	#5	4'-4"	17		10"	2'-8"	10"								
5A05	24	#5	4'-4"	17		2'-2"	2'-2"									
6A08	30	#6	7'-2"	17		2'-6"	4'-8"									
6A09	30	#6	6'-4"	1	8"	5'-0"					8"		6"			
6A10	30	#6	7'-1 $\frac{1}{2}$"	3	8"	5'-0"	1'-5 $\frac{1}{2}$"					1'-1"	6"	1'-4"	6'-4"	

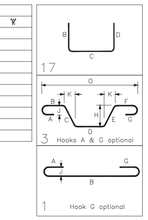

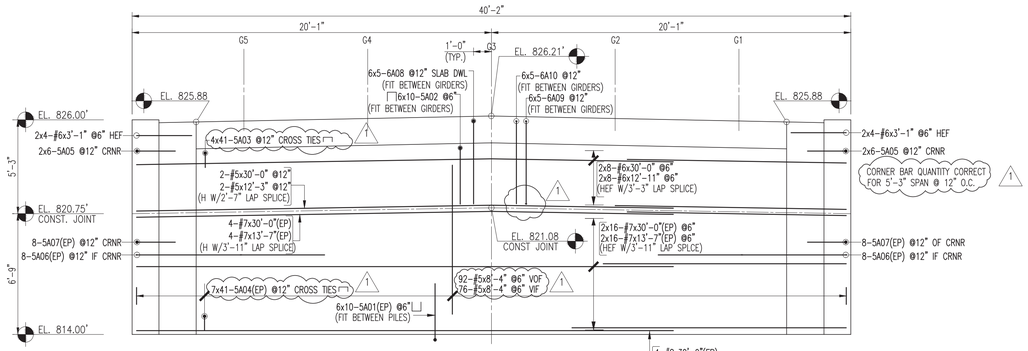

ABUTMENT 1 ELEVATION

GENERAL NOTE: 2"-2" LAP SPLICE & 3" CLEAR U.N.O.
80 LF - 3" SBU (2 ROWS BOTT)

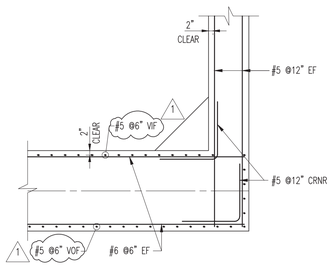

TYP CRNR DETAIL

ABOVE CONST. JOINT

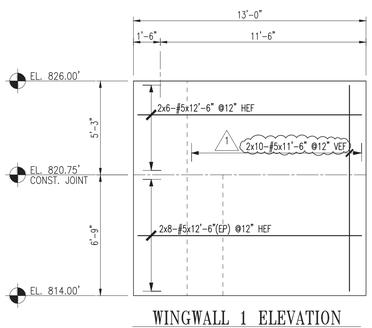

WINGWALL 1 ELEVATION

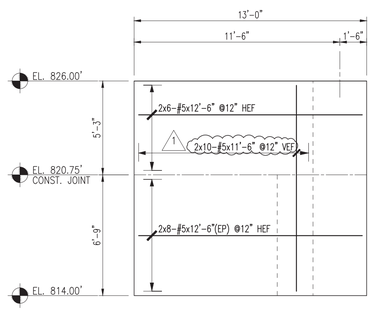

WINGWALL 2 ELEVATION

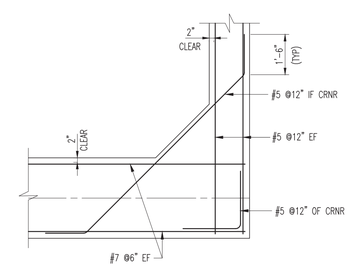

TYP CRNR DETAIL

BELOW CONST. JOINT

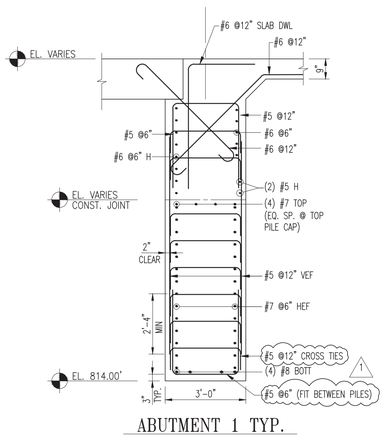

ABUTMENT 1 TYP.

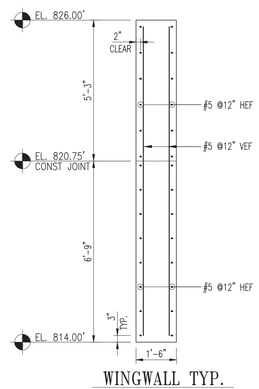

WINGWALL TYP.

Vermont Agency of Transportation

RECEIVED

ON: May 28, 2014

and Checked for

CONFORMANCE

BY: Jennifer Fitch DATE: 06/03/2014

ALL MTRL. ON THIS DWG NOTED W/ (EP) SHALL BE ASTM A775 GRADE 60 "EPOXY COATED" U.N.O.

ALL OTHER MTRL. ABOVE & LAPPING C.J. TO BE DUAL COATED REINF.

SHOP DRAWING REVIEW

☒ REVIEWED AS REQUIRED BY THE CONSTRUCTION CONTRACT DOCUMENTS AND APPROVED, BUT ONLY FOR CONFORMANCE TO THE DESIGN CONCEPT OF THE WORK, AND SUBJECT TO FURTHER LIMITATIONS AND REQUIREMENTS CONTAINED IN THE CONSTRUCTION CONTRACT DOCUMENTS.

☐ REJECTED ☐ REVISE AND RESUBMIT ☐ FURNISH AS CORRECTED

CORRECTIONS OR COMMENTS MADE ON THE SHOP DRAWINGS DURING THIS REVIEW DO NOT RELIEVE CONTRACTOR FROM COMPLIANCE WITH REQUIREMENTS OF THE DRAWINGS AND SPECIFICATIONS. THIS CHECK IS ONLY FOR REVIEW OF GENERAL CONFORMANCE WITH THE DESIGN CONCEPT OF THE PROJECT AND GENERAL COMPLIANCE WITH THE INFORMATION GIVEN IN THE CONTRACT DOCUMENTS. THE CONTRACTOR IS RESPONSIBLE FOR: CONFIRMING AND CORRELATING ALL QUANTITIES AND DIMENSIONS; SELECTING FABRICATION PROCESSES AND TECHNIQUES OF CONSTRUCTION; COORDINATING HIS WORK WITH THAT OF ALL OTHER TRADES; AND PERFORMING HIS WORK IN A SAFE AND SATISFACTORY MANNER.

VHB

Job Number: 57517

Reviewed By: B Masse

Date: 6-3-14

LAP CHART-U.N.O.

#11	100"	71"
#10	81"	58"
#9	64"	46"
#8	51"	36"
#7	39"	28"
#6	28"	20"
#5	22"	16"
#4	18"	13"
#3	13"	12"
SIZE	TOP BARS ★	OTHER BARS

★ -Top bars are horiz. bars with more than 12" of concrete cast below the bars.

No.	Description	Date	By
1	REV. PER REVISION DWGS.	05/27/2014	MAD
0	SENT FOR APPROVAL	5-7-14	MAD

Revisions and Issue Record

The full intent and purpose of this drawing is the placing of reinforcing steel bars ONLY. It is NOT to be used as a means of communication between the Architect, Engineer, Contractor or any other Sub-trades.

THIS DRAWING IS NOT TO BE SCALED.

HarrisRebar Barker Steel — National Strength. Local Service.

DETAILED AT: MILFORD MASSACHUSETTS

Project: BRF 0162 VT RTE 73 & 100 ROCHESTER, VT

Drawing: BR #19 ABUT. #1 & WINGWALL REINF

Customer: W.M. SCHULTZ CONSTRUCTION, INC.

Engineer: VANASSE HANGEN BRUSTLIN, INC.

Refer to Release:

Date	Drawn	Chkd.	JOB No.	Dwg. No.
04/29/2014	MAD	JOE	33505211	19-AB-R01

W:\Melissa Proj: Folder\33505211-W.M. Schultz Const.-Rochester Bridge\Placing Drawings\DWGs\REV1_19-AB-R01.dwg

Vermont Agency of Transportation

RECEIVED
ON: May 28, 2014
and Checked for
CONFORMANCE
BY: Jennifer Fitch DATE: 06/03/2014

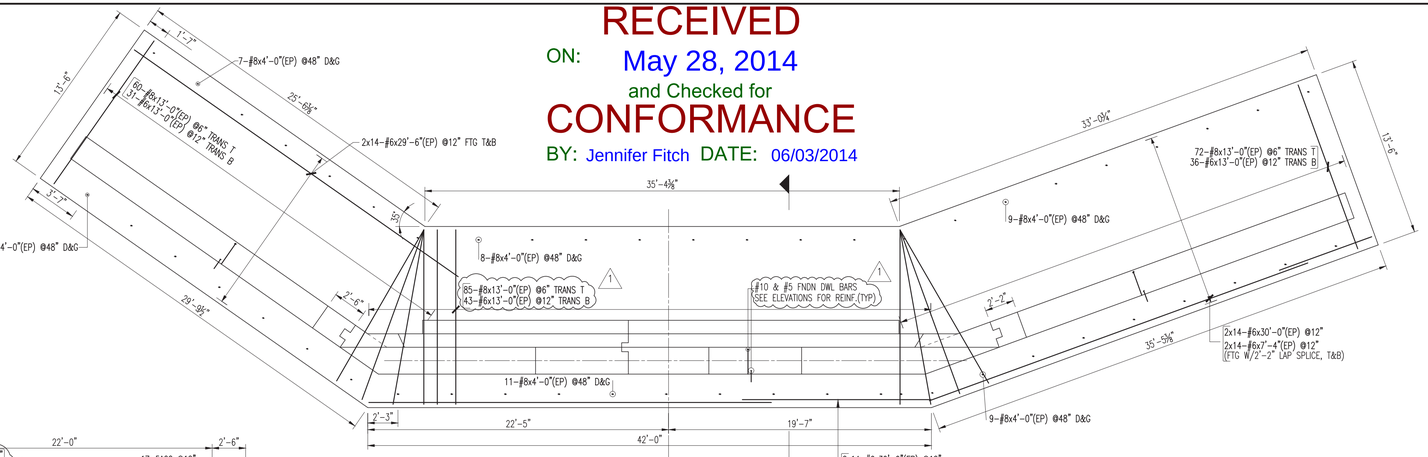

ABUTMENT 2 FNDN PLAN

GENERAL NOTE: 2'-2" LAP SPLICE & 3" CLEAR U.N.O.
410 LF – 3" SBU @48"

Drawing Sheet : 19-AB-R02																
BAR LIST																
Bar Mark	Qty	Size	Total Length	Type	'A'	'B'	'C'	'D'	'E'	'F'	'G'	'H'	'J'	'K'	'O'	'R'
A21a	3	#5	18'-0"			18'-0"										
A21b	3	#5	18'-5"			18'-5"										
A21c	3	#5	18'-9"			18'-9"										
A21d	3	#5	19'-2"			19'-2"										
A21e	3	#5	19'-6"			19'-6"										
A21f	3	#5	19'-11"			19'-11"										
A21g	3	#5	20'-4"			20'-4"										
A21h	3	#5	20'-8"			20'-8"										
A21i	1	#5	21'-1"			21'-1"										
5A02	105	#5	6'-7"	17		10"	5'-9"									
5A03	124	#5	9'-5"	25		1'-6"	2'-9 ¼"	10"	2'-9 ¼"	1'-6"			2'-8 ¼"	1'-4 ¼"		
5A04	17	#5	7'-8 ¼"	3		2'-2"	5'-6 ¼"						3'-2 ¼"	4'-6 ¼"	6'-8 ¼"	
5A05	17	#5	7'-4 ¼"	3		2'-2"	5'-2 ¼"						3'-4"	4'-3"	6'-5"	
5A06	45	#5	10'-1 ¼"	16	10"	3'-8"	1'-4"	4'-3 ¼"					3'-1 ¼"	2'-11 ¼"	4'-3 ¼"	
5A07	6	#5	8'-8"	16	10"	2'-8"	2'-3"	2'-11 ¼"					2'-1 ¼"	2'-4"	4'-3 ¼"	
5A14	17	#5	10'-1 ¼"	3		2'-2"	7'-11 ¼"						2'-9 ¼"	7'-5 ¼"	9'-7 ¼"	
5A15	17	#5	9'-10"	3		2'-2"	7'-8 ¼"						2'-8 ¼"	7'-2 ¼"	9'-4 ¼"	
10A01	98	#10	14'-8"	17		1'-10"	12'-10"									
10A20	104	#10	16'-8"	17		1'-10"	14'-10"									
A23a	7	#5	20'-0"			20'-0"										
A23b	7	#5	20'-3"			20'-3"										
A23c	7	#5	20'-6"			20'-6"										
A23d	7	#5	20'-9"			20'-9"										
5A08	37	#5	5'-11"	55	10"	8"	4'-5"									
5A09	37	#5	5'-6"	17		1'-8"	3'-10"									
5A10	25	#5	1'-10"	3		1'-0"	10"						7 ¼"	6 ¼"	1'-6 ¼"	
5A11	4	#5	6'-0"	8	2'-2"	1'-8"					2'-2"					
5A12	2	#5	4'-4"	3		2'-2"	2'-2"						1'-3 ¼"	1'-9"	3'-11"	
5A13	2	#5	7'-8 ¼"	3		4'-3 ¼"	3'-4 ¼"						1'-11 ¼"	2'-9"	7'-4"	
5A16	2	#5	4'-4"	3		2'-2"	2'-2"						9 ¼"	2'-4"	4'-2 ¼"	
5A17	2	#5	9'-1 ¼"	3		4'-6 ¼"	4'-6 ¼"						1'-7 ¼"	4'-3 ¼"	8'-10"	
5A22	45	#5	7'-0"	17		2'-8"	1'-8"	2'-8"								
5A24	8	#5	9'-6"	17		4'-5"	8"	4'-5"								
5A25	2	#5	9'-8"	17		4'-5"	10"	4'-5"								
5A26	1	#5	10'-0"	17		4'-5"	1'-2"	4'-5"								
5A27	2	#5	10'-4"	17		4'-5"	1'-6"	4'-5"								
5A28	1	#5	6'-8 ¼"	17		2'-6 ¼"	1'-8"	2'-6 ¼"								
5A29	1	#5	6'-5"	17		2'-4 ¼"	1'-8"	2'-4 ¼"								
5A30	1	#5	6'-2"	17		2'-3"	1'-8"	2'-3"								
5A31	1	#5	5'-10 ¼"	17		2'-1 ¼"	1'-8"	2'-1 ¼"								
5A32	1	#5	5'-7"	17		1'-11 ¼"	1'-8"	1'-11 ¼"								
5A33	1	#5	5'-3 ¼"	17		1'-9 ¼"	1'-8"	1'-9 ¼"								
5A34	1	#5	5'-0 ¼"	17		1'-8 ¼"	1'-8"	1'-8 ¼"								
5A35	1	#5	4'-10 ¼"	17		1'-7 ¼"	1'-8"	1'-7 ¼"								

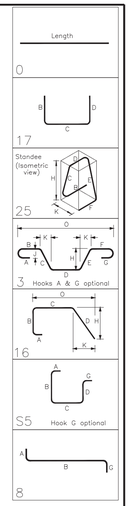

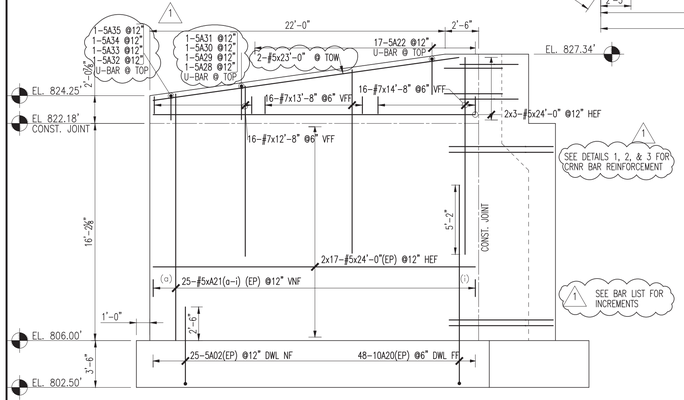

WINGWALL 3 ELEVATION

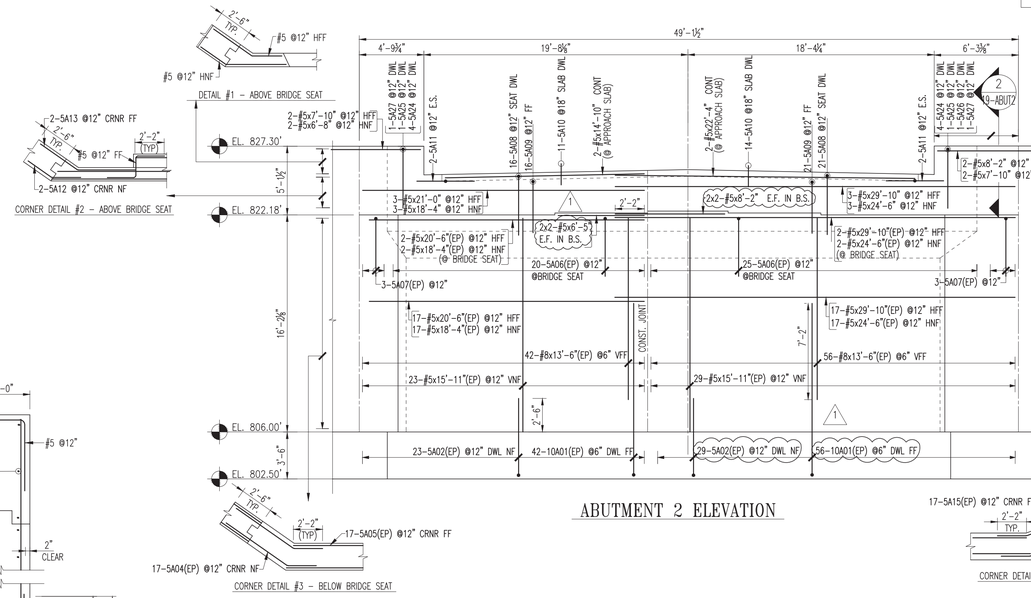

ABUTMENT 2 ELEVATION

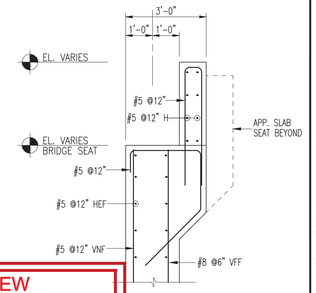

2 SECTION
19-ABUT2 SCALE: N.T.S.

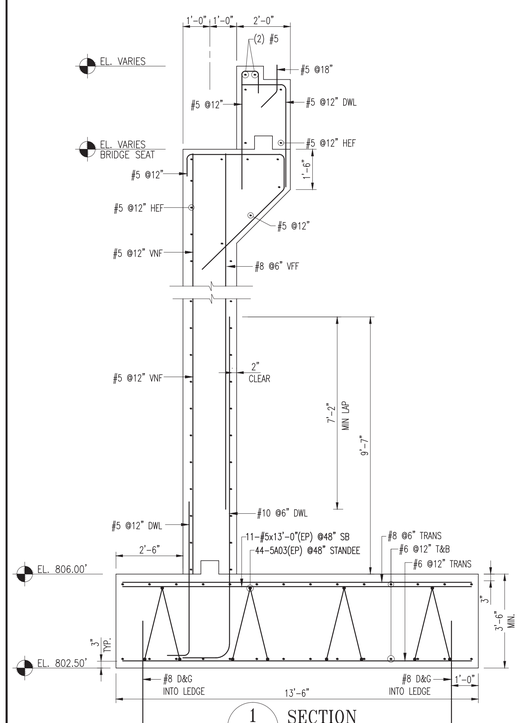

1 SECTION
19-ABUT2 SCALE: N.T.S.

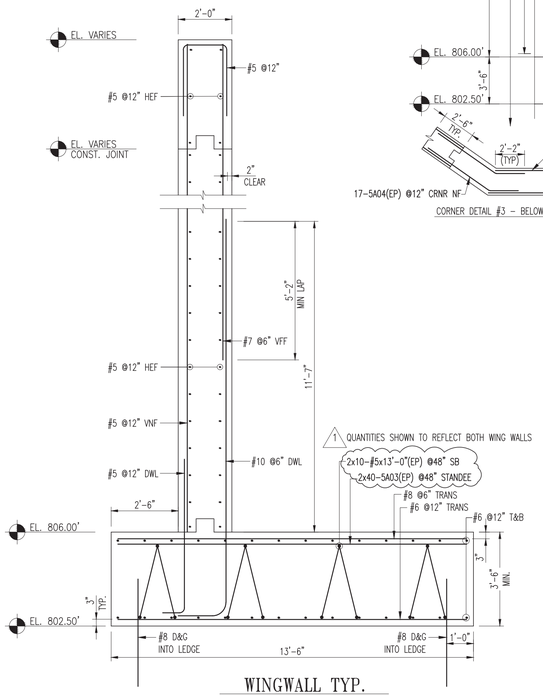

WINGWALL TYP.

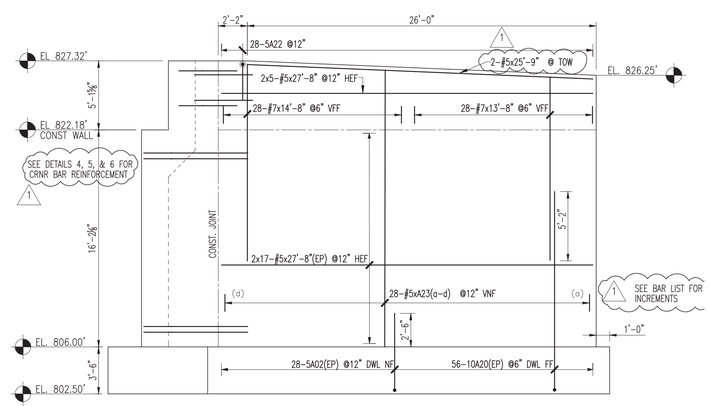

WINGWALL 4 ELEVATION

SHOP DRAWING REVIEW

☒ REVIEWED AS REQUIRED BY THE CONSTRUCTION CONTRACT DOCUMENTS AND APPROVED, BUT ONLY FOR CONFORMANCE TO THE DESIGN CONCEPT OF THE WORK, AND SUBJECT TO FURTHER LIMITATIONS AND REQUIREMENTS CONTAINED IN THE CONSTRUCTION CONTRACT DOCUMENTS.

☐ REJECTED ☐ REVISE AND RESUBMIT ☐ FURNISH AS CORRECTED

CORRECTIONS OR COMMENTS MADE ON THE SHOP DRAWINGS DURING THIS REVIEW DO NOT RELIEVE CONTRACTOR FROM COMPLIANCE WITH REQUIREMENTS OF THE DRAWINGS AND SPECIFICATIONS. THIS CHECK IS ONLY FOR REVIEW OF GENERAL CONFORMANCE WITH THE DESIGN CONCEPT OF THE PROJECT AND GENERAL COMPLIANCE WITH THE INFORMATION GIVEN IN THE CONTRACT DOCUMENTS. THE CONTRACTOR IS RESPONSIBLE FOR: CONFIRMING AND CORRELATING ALL QUANTITIES AND DIMENSIONS; SELECTING FABRICATION PROCESSES AND TECHNIQUES OF CONSTRUCTION; COORDINATING HIS WORK WITH THAT OF ALL OTHER TRADES; AND PERFORMING HIS WORK IN A SAFE AND SATISFACTORY MANNER.

VHB

Job Number: 57517
Reviewed By: B Masse
Date: 6-3-14

ALL MTRL. ON THIS DWG NOTED W/ (EP) SHALL BE ASTM A775 GRADE 60 "EPOXY COATED" U.N.O.

ALL OTHER MTRL. ABOVE & LAPPING C.J. TO BE DUAL COATED REINF.

LAP CHART-U.N.O.

SIZE	TOP BARS ★	OTHER BARS
#11	100"	71"
#10	81"	58"
#9	64"	46"
#8	51"	36"
#7	39"	28"
#6	28"	20"
#5	22"	16"
#4	18"	13"
#3	13"	12"

★ -Top bars are horiz. bars with more than 12" of concrete cast below the bars.

No.	Description	Date	By
1	REV. PER REVISION DWGS.	05/27/2014	MAD
0	SENT FOR APPROVAL	5-7-14	MAD

Revisions and Issue Record

The full intent and purpose of this drawing is the placing of reinforcing steel bars ONLY. It is NOT to be used as a means of communication between the Architect, Engineer, Contractor or any other Sub-trades.

THIS DRAWING IS NOT TO BE SCALED.

HarrisRebar Rarber Steel — National Strength. Local Service.

DETAILED AT: MILFORD MASSACHUSETTS

Project: BRF 0162 VT Rte, 73 & 100 ROCHESTER, VT

Drawing: BR 19 ABUT #2 & WINGWALL REINF, & SECTIONS

Customer: W.M. SCHULTZ CONSTRUCTION INC

Engineer: VANASSE HANGEN BRUSTLIN, INC.

Refer to Release:

Date	Drawn	Chkd.	JOB No.	Dwg. No.
04/24/2014	MAD	JOE	33505211	19-AB-R02

W:\Melissa Proj. Folder\33505211-W.M. Schultz Const.-Rochester Bridge\Placing Drawings\DWGS\REV#1 - 19-AB-R02.dwg

Drawing Sheet : 19-DECK					BAR LIST											
Bar Mark	Qty	Size	Total Length	Type	'A'	'B'	'C'	'D'	'E'	'F'	'G'	'H'	'J'	'K'	'O'	'R'
6A01	478	#6	6'-3"	1	8"	5'-7"							6"			
5A02	372	#5	5'-2"	H68		10"	10"	1'-8"	1'-0"	10"					2'-5 X"	
5A03	1	#5	10'-1 X"	32		2'-3"	7'-10 X"					2'-3 X"	7"	7'-9 X"	9'-8 X"	13'-3"
5A04	1	#5	10'-1 X"	32		2'-3"	7'-10 X"					2'-4 X"	7 X"	7'-9"	9'-7 X"	12'-6"
5A05	1	#5	10'-4"	32		2'-3"	7'-9 X"					2'-4 X"	7 X"	7'-8 X"	9'-7 X"	12'-8"
9A06	78	#9	20'-9"	1	1'-3"	19'-6"							11 X"			
6A07	16	#6	8'-9"	1	8"	8'-1"							6"			
6A08	30	#6	9'-9"	1	8"	9'-1"							6"			

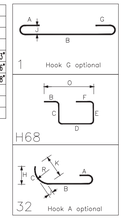

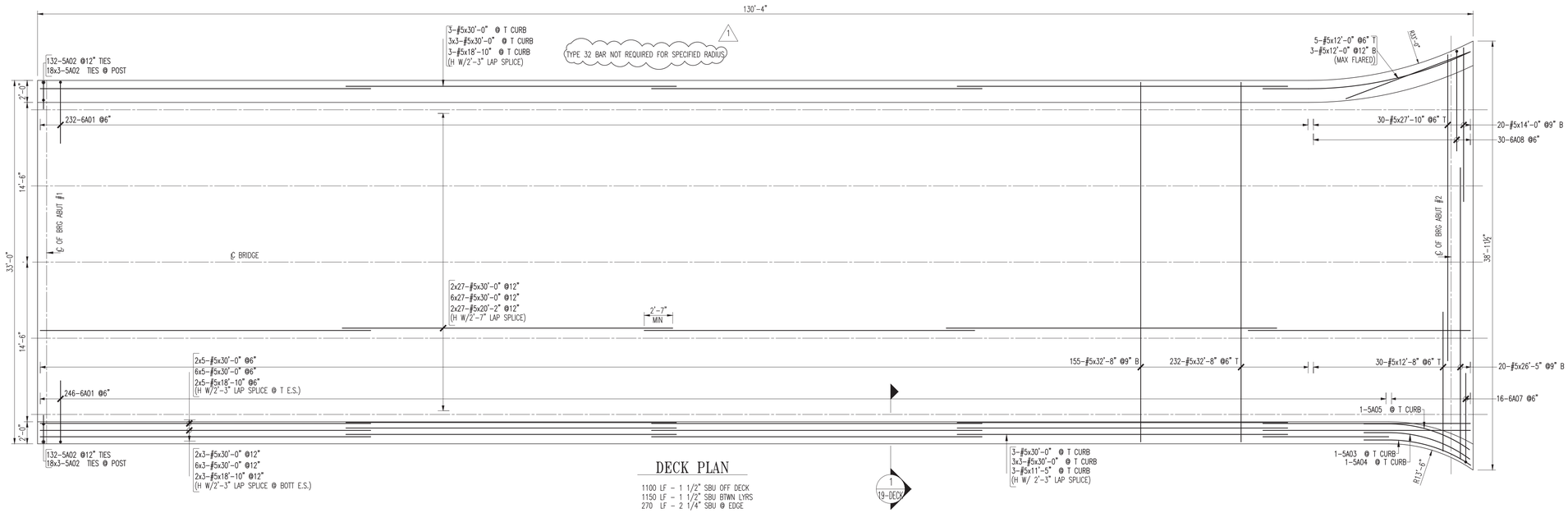

DECK PLAN

1100 LF - 1 1/2" SBU OFF DECK
1150 LF - 1 1/2" SBU BTWN LYRS
270 LF - 2 1/4" SBU @ EDGE

Vermont Agency of Transportation

RECEIVED

ON: May 28, 2014

and Checked for

CONFORMANCE

BY: Jennifer Fitch DATE: 06/03/2014

SHOP DRAWING REVIEW

☒ REVIEWED AS REQUIRED BY THE CONSTRUCTION CONTRACT DOCUMENTS AND APPROVED, BUT ONLY FOR CONFORMANCE TO THE DESIGN CONCEPT OF THE WORK, AND SUBJECT TO FURTHER LIMITATIONS AND REQUIREMENTS CONTAINED IN THE CONSTRUCTION CONTRACT DOCUMENTS.

☐ REJECTED ☐ REVISE AND RESUBMIT ☐ FURNISH AS CORRECTED

CORRECTIONS OR COMMENTS MADE ON THE SHOP DRAWINGS DURING THIS REVIEW DO NOT RELIEVE CONTRACTOR FROM COMPLIANCE WITH REQUIREMENTS OF THE DRAWINGS AND SPECIFICATIONS. THIS CHECK IS ONLY FOR REVIEW OF GENERAL CONFORMANCE WITH THE DESIGN CONCEPT OF THE PROJECT AND GENERAL COMPLIANCE WITH THE INFORMATION GIVEN IN THE CONTRACT DOCUMENTS. THE CONTRACTOR IS RESPONSIBLE FOR: CONFIRMING AND CORRELATING ALL QUANTITIES AND DIMENSIONS; SELECTING FABRICATION PROCESSES AND TECHNIQUES OF CONSTRUCTION; COORDINATING HIS WORK WITH THAT OF ALL OTHER TRADES; AND PERFORMING HIS WORK IN A SAFE AND SATISFACTORY MANNER.

VHB

Job Number: 57517
Reviewed By: B Masse
Date: 6-3-14

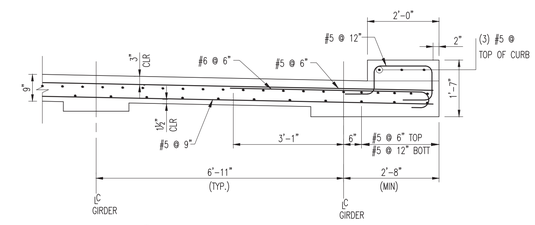

1 / 19-DECK TYP. OVERHANG DETAIL
SCALE: N.T.S.

ALL MATERIAL ON MAIN DECK TO BE DUAL COATED REINF.

OTHER MTRL. ON THIS DWG NOTED W/ (EP) SHALL BE ASTM A775 GRADE 60 "EPOXY COATED" U.N.O.

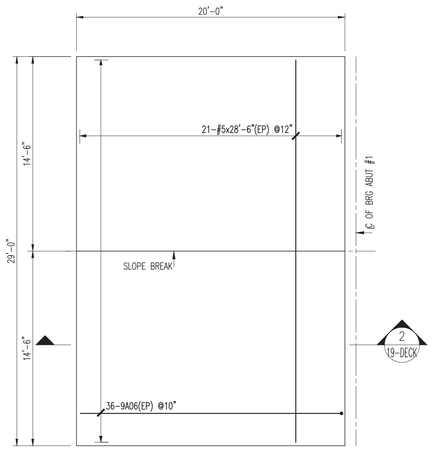

APPROACH SLAB #1

150 LF 3" SBU @ 48" OFF GRADE

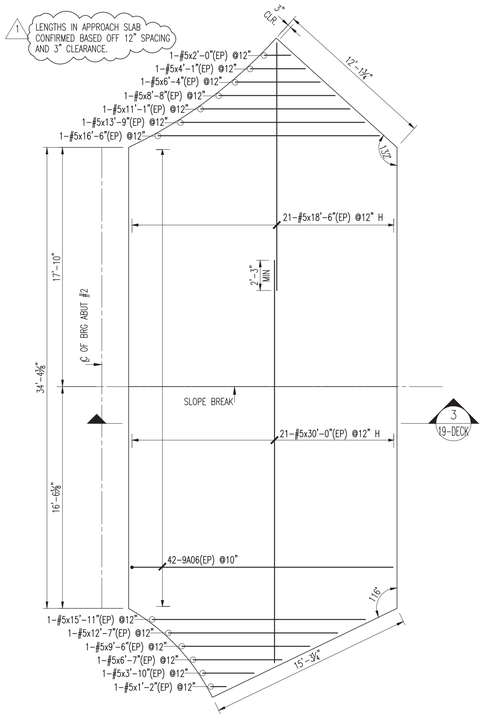

APPROACH SLAB #2

240 LF 3" SBU 48" OFF GRADE

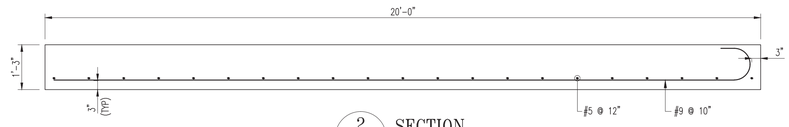

2 / 19-DECK SECTION
SCALE: N.T.S.

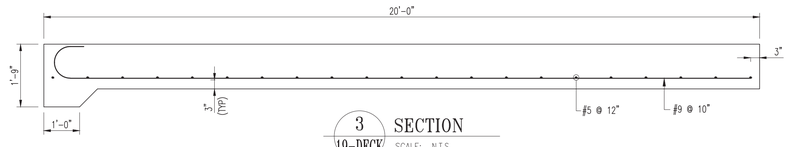

3 / 19-DECK SECTION
SCALE: N.T.S.

LAP CHART-U.N.O.

SIZE	TOP BARS ★	OTHER BARS
#11	100"	71"
#10	81"	58"
#9	64"	46"
#8	51"	36"
#7	39"	28"
#6	28"	20"
#5	22"	16"
#4	18"	13"
#3	13"	12"

★ -Top bars are horiz. bars with more than 12" of concrete cast below the bars.

No.	Description	Date	By
1	REV. PER REVISION DWGS.	05/27/2014	MAD
0	SENT FOR APPROVAL	5-7-14	MAD

Revisions and Issue Record

The full intent and purpose of this drawing is the placing of reinforcing steel bars ONLY. It is NOT to be used as a means of communication between the Architect, Engineer, Contractor or any other Sub-trades.

THIS DRAWING IS NOT TO BE SCALED.

HarrisRebar Harter Steel — National Strength. Local Service.

DETAILED AT: MILFORD MASSACHUSETTS

Project: BRF 0162 VT RTE 73 & 100 ROCHESTER, VT

Drawing: BR #19 DECK & APP. SLAB REINF PLAN & SECTIONS

Customer: W.M. SCHULTZ CONSTRUCTION, INC

Engineer: VANASSE HANGEN BRUSTLIN, INC.

Refer to Release:

Date	Drawn	Chkd.	JOB No.	Dwg. No.
05/02/2014	MAD	JOE	33505211	19-DECK

W:\Melissa Proj. Folder\33505211-W.M. Schultz Const.-Rochester Bridge\Placing Drawings\DWGS\REV#1_19-DECK.dwg