WELDING PROCEDURE SPECIFICATION

Material Specification	A572 GRD. 50 /A992-06a
Welding Process	FCAW
Manual or Machine	SEMAUTOMATIC
Position of Welding	FLAT
Filler Metal Specification	A5.20
Filler Metal Classification	E70 LINCOLN OUTERSHEILD
Flux	N/A
Shielding Gas	CO 2 Dew Point -40DEG F Flow Rate 50 CFM (45 TO 63 CFM)
Single or Multiple Pass	SINGLE
Single or Multiple Arc	N/A
Welding Current	DC
Polarity	DCEP
Welding Progression	STRINGER
Root Treatment	CLEAN AS PER SECTION 603 OF THE NYSSCM
Preheat and Interpass Temperature	PREHEAT AS PER TABLEL 708 OF THE NYSSCM
Postheat Temperature	NONE
Heat Input	Min _____ Max _____

WELDING PROCEDURE

Pass no.	Electrode size	Welding Current Amperes	Welding Current Volts	Travel speed	Joint detail
1	3/32	390	27	12	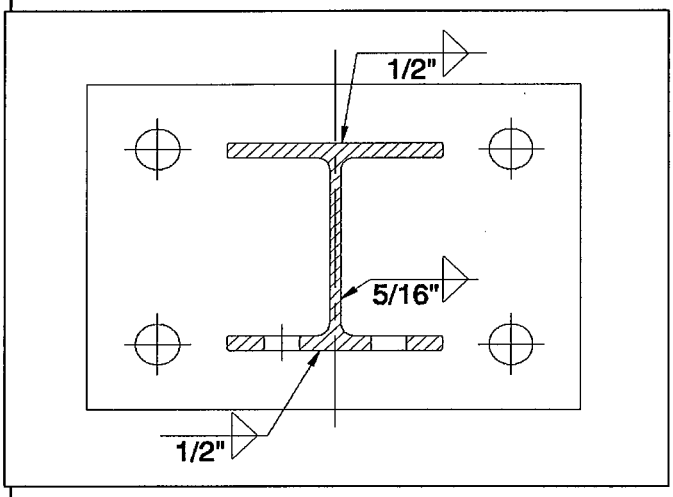
Variable	LIMITS	351 TO 429	25 TO 29	11 TO 13	

Vermont Agency of Transportation
RECEIVED
ON: May 7, 2013
and Checked for
CONFORMANCE
BY: Rob Young DATE: 06/07/2013

This procedure may vary due to fabrication sequence, fit-up, pass size, etc., within the limitation of variables given in Section 5.

Procedure No.	3008	Contractor	Elderlee, Inc.
Revision No.		Authorized By	RANDY SCOTT
		Date	10/18/2011