PITTSFIELD ER BRF 022-1(23)
CONTRACTOR FABRICATED PRE-CAST

SHEET1:ABUTMENT #1 PLAN
SHEET2:ABUTMENT #2 PLAN
SHEET2A:CASTING PLAN
SHEET3:WING WALL PLAN
SHEET4:TYPICAL KEY WAY DETAILS
SHEET5:GENERAL NOTES
SHEET6:QC PROCEDURES/PLAN
SHEET6A:QC PROCEDURES/PLAN
SHEET7:POST TENSIONING DETAILS
SHEET8:POST TENSIONING DETAILS
SHEET8A:POST TENSIONING DETAILS
SHEET9:CONCRETE MIX DESIGN
SHEET10-16 LIFTING POINTS
SHEET17:REINFORCING STEEL WINGWALLS
SHEET18:REINFORCING STEEL ABUTMENTS
ATTACHMENT#1 LIFTING DESIGN

REVISED 5/2/14

COLD RIVER BRIDGES, LLC
10 LANBRO LANE
TEL 603-756-9300 WALPOLE, NH FAX 603-756-9303

PITTSFIELD ER BRF 022-1(23)

COVER SHEET/INDEX

SHEET NUMBER: COVER

DATE: 10-31-13 scale:

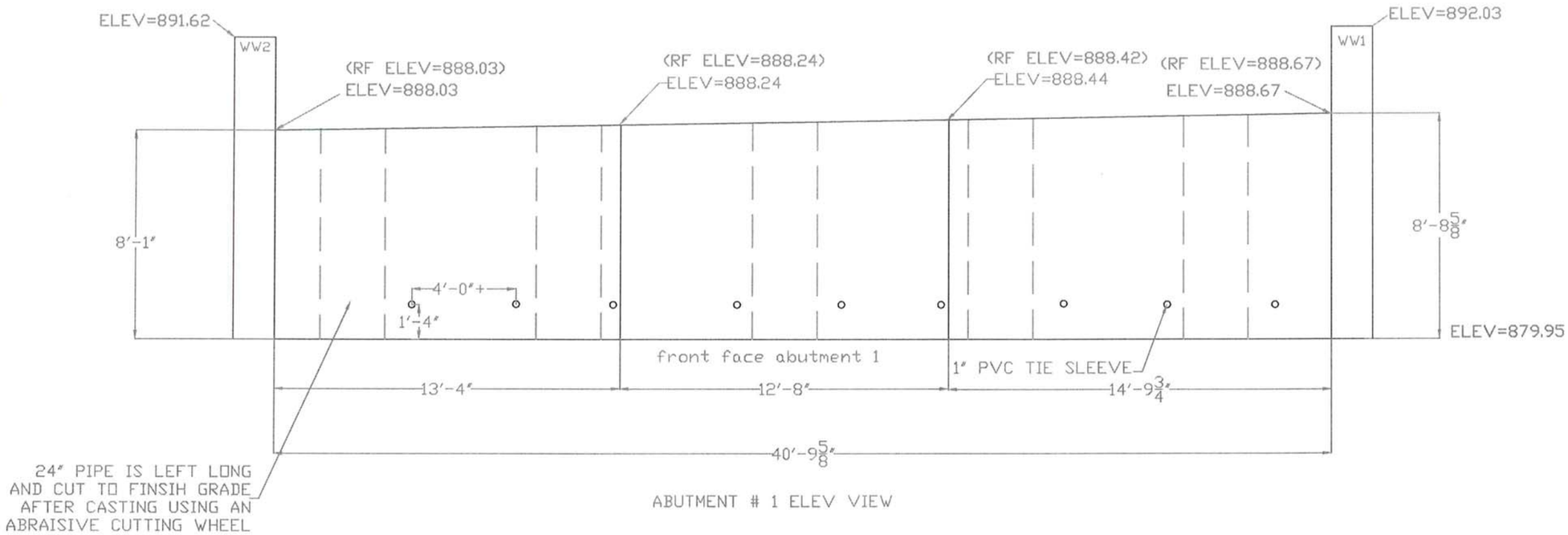

ABUTMENT # 1 ELEV VIEW

***NOTE:

1.PLEASE SEE SHEETS 14,15,16 FOR LIFTING POINT LOCATION

2.IF WEEP PIPES ARE NOT DESIRED 1" PVC CAN BE USED AS A TIE SLEEVE.

ABUTMENT A		
LOCATION	***ELEV***	***HGT***
A	888.03	8'-1"
B	888.03	8'-1"
C	888.24	8'-3 1/2"
D	888.22	8'-3 1/4"
E	888.44	8'-5 7/8"
F	888.42	8'-5 5/8"
G	888.67	8'-8 5/8"
H	888.67	8'-8 5/8"

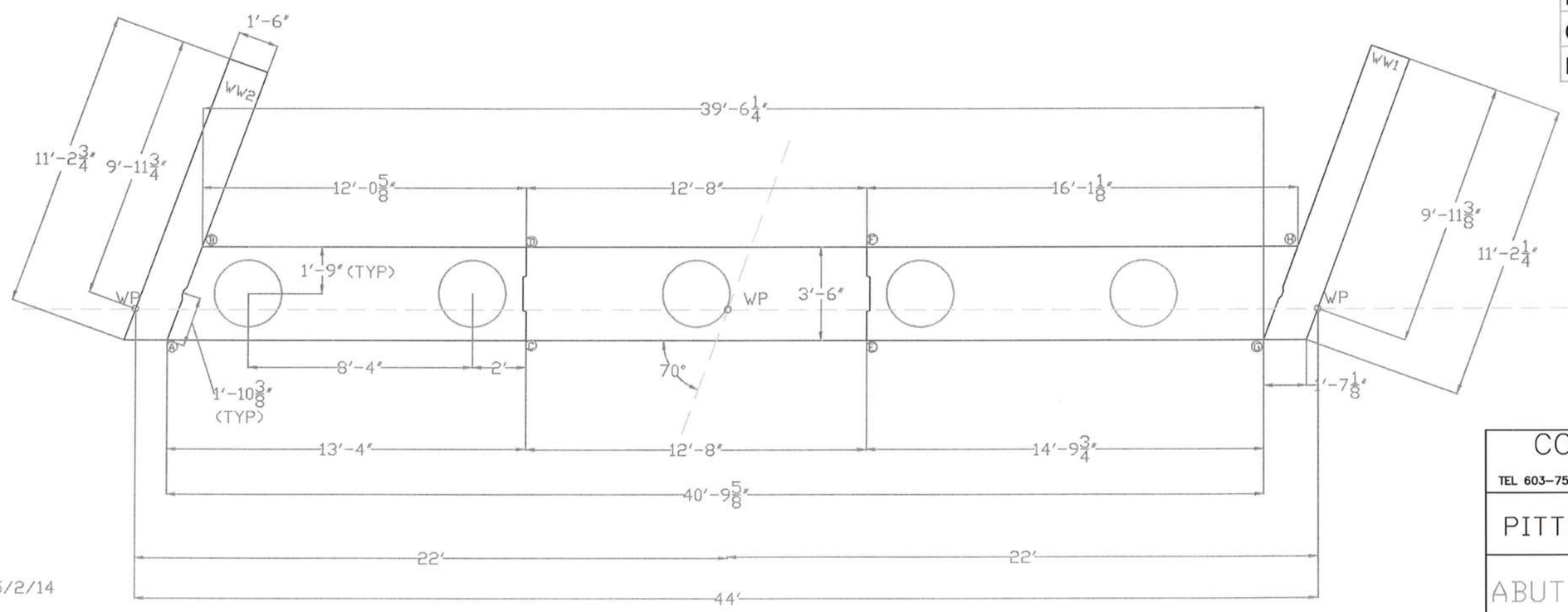

ABUTMENT # 1 PLAN VIEW

REVISED 5/2/14

Vermont Agency of Transportation
RECEIVED
Attached E350/F032-1(23) Abut Approved Annotated 5-7-2014.pdf

CK'D BY JG/JW OK'D BY JS

May 5, 2014

RESUBMIT NO Approved

BY KH DATE 5-7-2014

COLD RIVER BRIDGES, LLC
10 LANBRO LANE
TEL 603-756-9300 WALPOLE, NH FAX 603-756-9303

PITTSFIELD ER BRF 022-1(23)

ABUT 1 PLAN/ELEV

SHEET NUMBER 1

DATE: 1-17-14 scale: 1/4"=1'

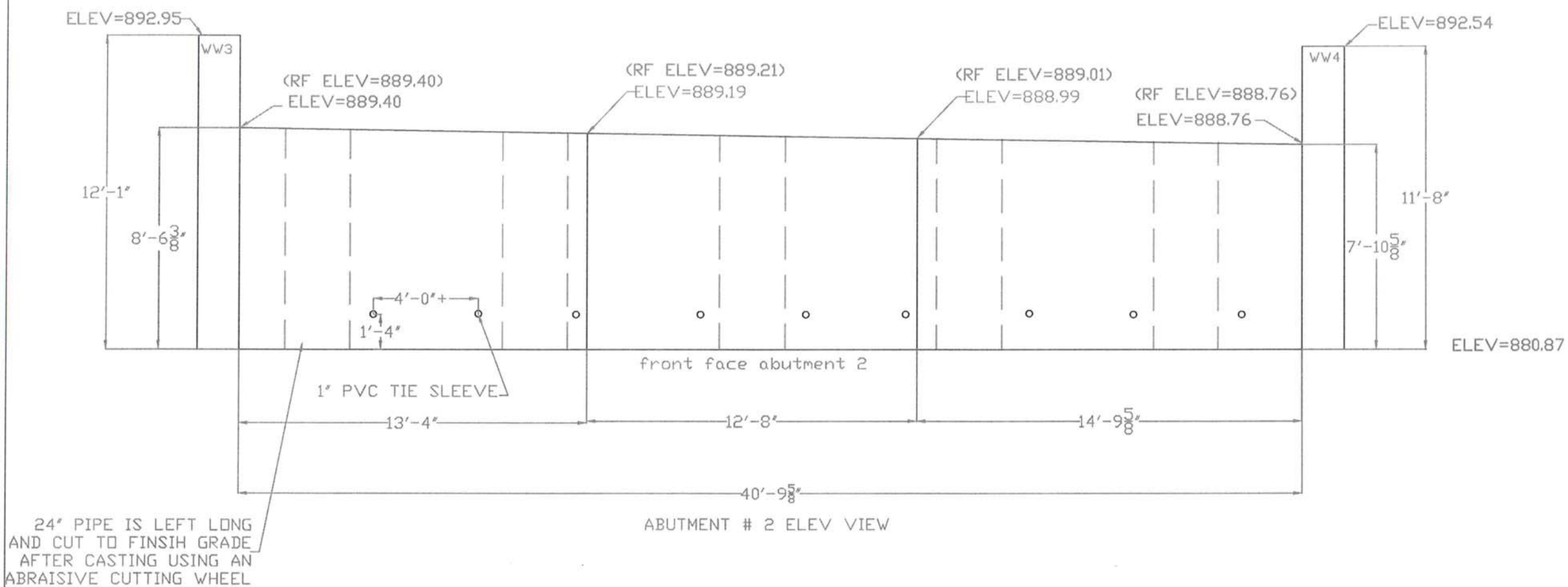

ABUTMENT # 2 ELEV VIEW

1.PLEASE SEE SHEETS 14,15,16 FOR LIFTING POINT LOCATION

***NOTE:

1.PLEASE SEE SHEETS 14,15,16 FOR LIFTING POINT LOCATION

2.IF WEEP PIPES ARE NOT DESIRED 1" PVC CAN BE USED AS A TIE SLEEVE.

ABUTMENT B		
LOCATION	***ELEV***	***HGT***
A	889.4	8'-6 3/8"
B	889.4	8'-6 3/8"
C	889.19	8'-3 7/8"
D	889.21	8'-4 1/8"
E	888.99	8'-1 1/2"
F	889.01	8'-1 3/4"
G	888.76	7'-10 5/8"
H	888.76	7'-10 5/8"

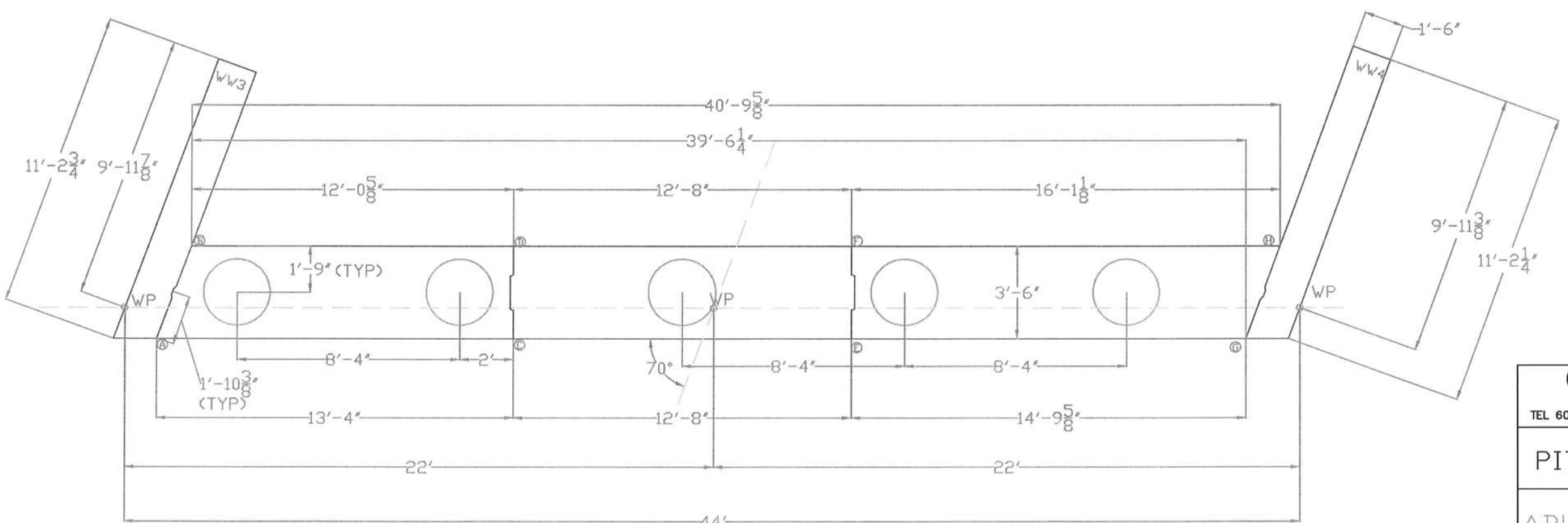

ABUTMENT # 2 PLAN VIEW

REVISED 5/2/14

Vermont Agency of Transportation

RECEIVED

Pittsfield ER BRF022-1(23) Abut Approved Assisted 5-7-2014.pdf

CK'D BY JG/JW OK'D BY JS

May 5, 2014

RESUBMIT NO Approved

BY KH DATE 5-7-2014

COLD RIVER BRIDGES, LL

10 LANBRO LANE

TEL 603-756-9300 WALPOLE, NH FAX 603-756-9

PITTSFIELD ER BRF 022-1(2

ABUT 2 PLAN/ELEV

SHEET NUMB

2

DATE: 1-17-14 scale: 1/4"=1'

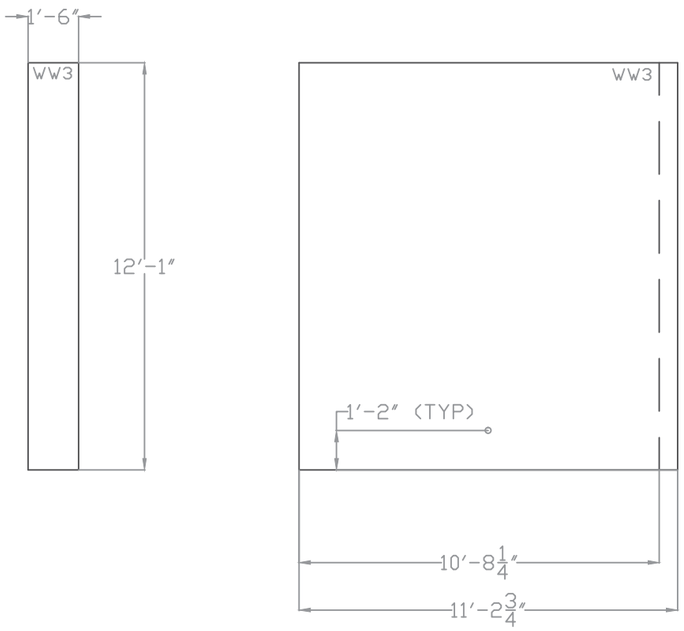

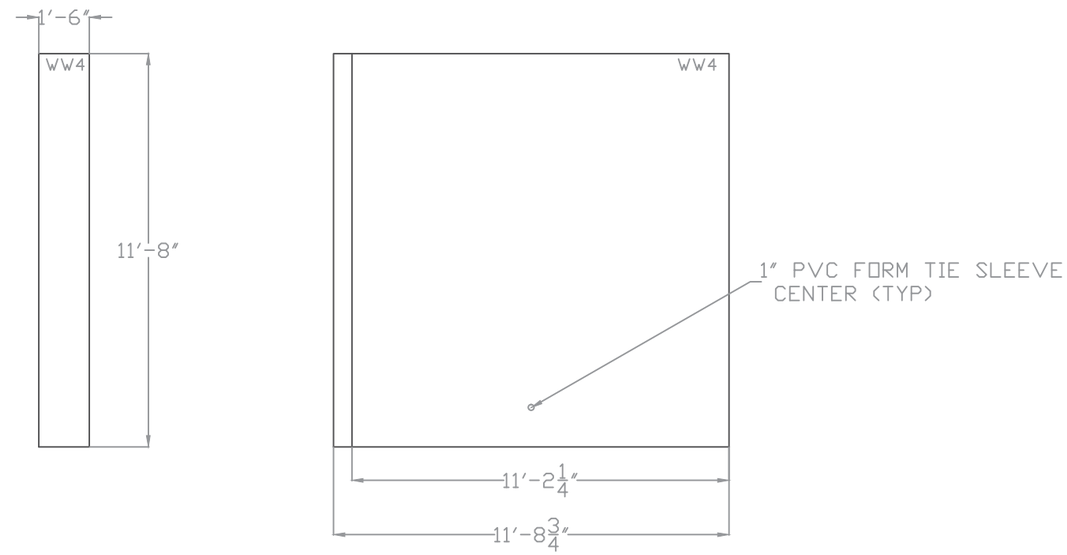

***NOTES
1. PLEASE SEE SHEETS 10,11,12,13
FOR LIFTING POINT LOCATION

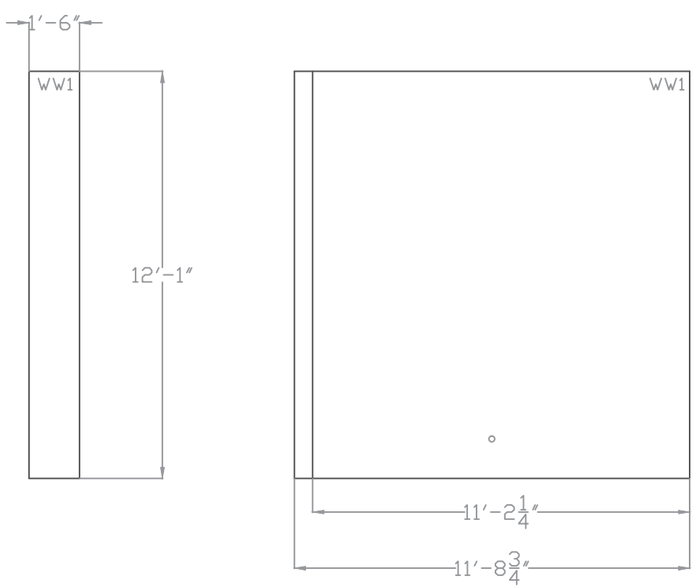

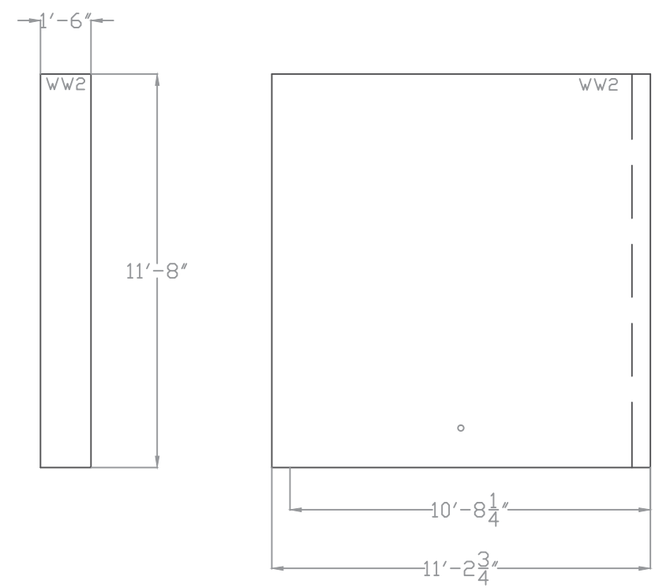

Vermont Agency of Transportation
RECEIVED
Pittsfield ERBRF 022-1(23) Abutment Submittal 4-7-2014.pdf
CK'D BY JW/SL/JR/JG OK'D BY WL
April 7, 2014
RESUBMIT NO Approved
BY KH DATE 4-8-2014

COLD RIVER BRIDGES, LL
10 LANBRO LANE
TEL 603-756-9300 WALPOLE, NH FAX 603-756-9

PITTSFIELD ER BRF 022-1(23

WW PLAN

SHEET NUMB
3

DATE: 1-17-14 scale: 1/4"=1'

REVISED 4/7/14

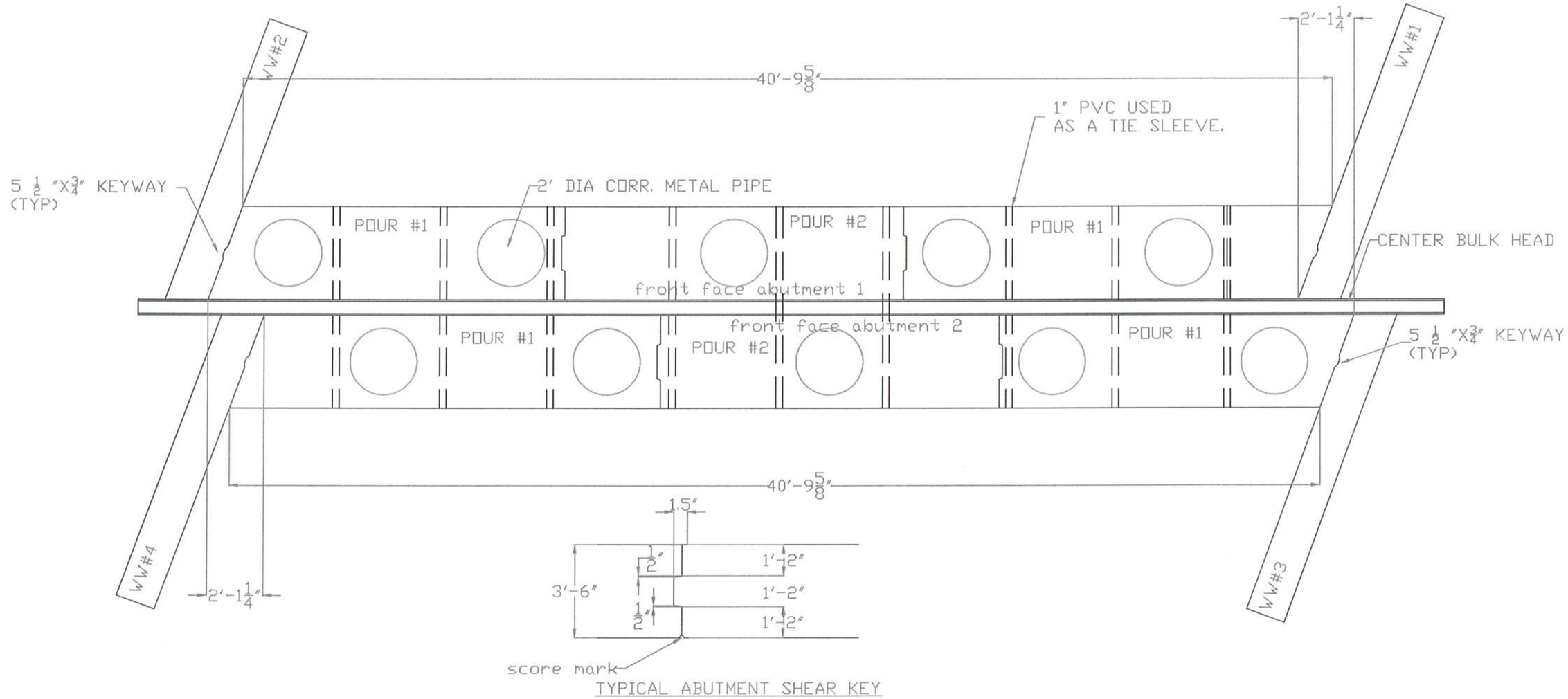

ABUTMENT CASTING PLAN

Vermont Agency of Transportation
RECEIVED
Pittsfield ER BRF022-1(23) Abut Approved Aproved 5-7-2014.pdf

CK'D BY JG/JW OK'D BY JS

May 5, 2014

RESUBMIT NO Approved

BY KH DATE 5-7-2014

COLD RIVER BRIDGES, LLC
10 LANBRO LANE
TEL 603-756-9300 WALPOLE, NH FAX 603-756-9303

PITTSFIELD ER BRF 022-1(23)

CASTING PLAN

SHEET NUMBER 4A

DATE: 2-19-14 scale: 1/4"=1'

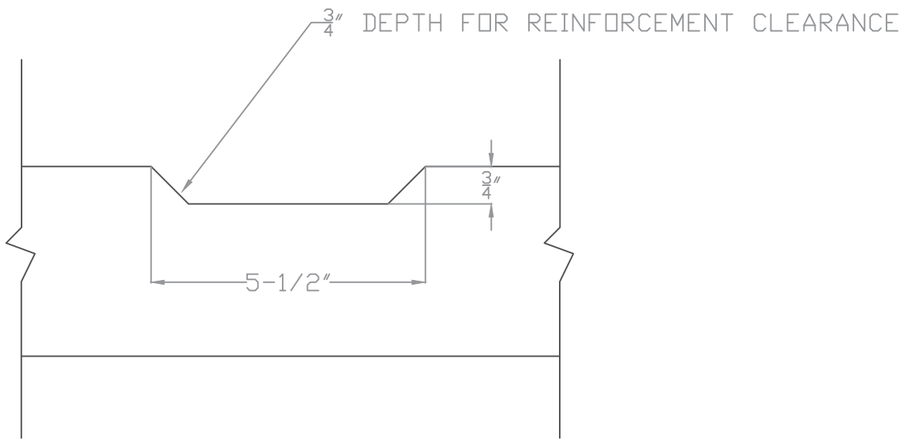

TYPICAL WINGWALL SHEAR KEY

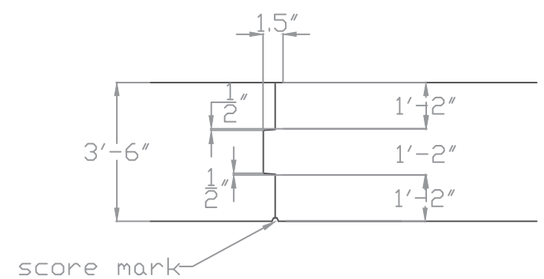

TYPICAL ABUTMENT SHEAR KEY

Vermont Agency of Transportation
RECEIVED
Pittsfield ERBRF 022-1(23) Abutment Submittal 4-7-2014.pdf

CK'D BY JW/SL/JR/JG OK'D BY WL

April 7, 2014

RESUBMIT NO Approved

BY KH DATE 4-8-2014

KEYWAY DETAILS

REVISED 4/7/14

COLD RIVER BRIDGES, LLC 10 LANBRO LANE TEL 603-756-9300 WALPOLE, NH FAX 603-756-9303	
PITTSFIELD ER BRF 022-1(23)	
KEYWAY DETAILS	SHEET NUMBER 4
DATE: 2-19-14 scale: 1/4"=1'	

CONCRETE NOTES:

1.CAST IN PLACE APPROACH SLABS- CONCRETE CLASS HPC A 4000 PSI

2.WINGWALL CONCRETE=5000 PSI

3.ABUTMENT CONCRETE= 5000PSI

4.ALL CONCRETE FOR PRE-CAST OPERATION SHALL BE SUPPLIED BY CARROLL CONCRETE INC.

5.ALL PRE-CAST CONCRETE MIX DESIGNS HAVE OR WILL BE SUBMITTED BY CARROLL CONCRETE INC.

6. CAST IN PLACE APPROACH SLABS WILL HAVE A BROOM FINISH..

7. WINGWALLS TOPS WILL HAVE A FORM FINISH, ABUTMENT TOPS WILL HAVE A ¼" AMPLITUDE RAKE FINISH EXCEPT UNDER BEARING PADS WILL RECEIVE A FLAT FINISH.

8. ABUTMENT INTERNAL BULKHEAD FORMS CAN BE REMOVED AFTER 48 HOURS CURE SHALL CONTINUE WITH THE USE OF DAYTON SUPERIOR J-9A WHITE WAX CURE.ALL RESIDUAL CURING COMPOUND WILL BE REMOVED BY SANDBLASTING.

9.ALL EXPOSED CONCRETE EDGES SHALL BE CHAMFERED 3./4"

10.ALL PRE-CAST FORM WORK EXCLUDING INTERNAL BULKHEADS WILL BE REMOVED WHEN THE CONCRETE HAS REACHED 85% OF DESIGN STRENGTH

11.WATER REPELLENT SILANE SHALL BE FURNISHED AND APPLIED IN ACCORDANCE WITH SECTION 514 TO ALL EXPOSED CONCRETE ON THE BRIDGE SUB-STRUCTURE

CONSTRUCTION SEQUENCE:

1.CAST WINGWALLS 1,2,3,4 (CAST FLAT, FINISH FACE DOWN)

2.STAND UP 'WINGWALLS 1,2,3,4.

3.MATCH CAST ABUTMENTS SECTIONS AS SHOWN IN CASTING SEQUENCE(POUR #1)

4.MATCH CAST REMAINING ABUTMENT SECTIONS (POUR #2)

5.APPLY EPOXY BONDING COMPOUND TO MATCH CAST JOINTS,SET ABUTMENT 1 SECTIONS ON PROPERLY GRADED SUB-GRADE, SET WINGWALLS 1&2, INSTALL STRANDS AND POST TENSION TO 3 KIPS.

6.REPEAT STEP 5 FOR ABUTMENT # 2 AND WW 3&4.

7.FILL PILE CAVITY VOIDS WITH HPC RAPID SET

8.AFTER HPC RAPID SET REACHES 3500 PSI PERFORM FINAL POST TENSION

LIFTING,HANDLING

1.LIFTING DESIGN AND HANDLING STRESSES ARE PART OF ATTACHED CALCULATION PACKAGE.

REVISED 5/2/14

Vermont Agency of Transportation
RECEIVED
Pittsfield ER BRF022-1(23) Abut Approved Revised 5-7-2014.pdf

CK'D BY JG/JW OK'D BY JS

May 5, 2014

RESUBMIT NO Approved

BY KH DATE 5-7-2014

COLD RIVER BRIDGES, LLC
10 LANBRO LANE
TEL 603-756-9300 WALPOLE, NH FAX 603-756-9303

PITTSFIELD ER BRF 022-1(23)

GENERAL NOTES

SHEET NUMBER 5

DATE: 2-19-14 SCALE:

QUALITY CONTROL PROCEDURES.

1.CARROLL CONCRETE WILL BE RESPONSIBLE FOR THE CONTRACTOR./SUPPLIOR QC TESTING DURING CONCERT PLACEMENT .CARROLL CONCRETE WILL SUPPLY AN ON SITE TECHNICIAN TO MONITOR AND DOCUMENT AIR CONTENT, WATER CEMENT RATIONS AND SLUMP OF EACH TRUCK.CARROLL CONCRETE WILL ALSO PRODUCE CONCRETE TEST CYLINDERS FOR 7,14,28 DAY STRENGTHS.CARROLL CONCRETES QC TECH WILL BE RESPONSIBLE FOR ANY ADJUSTMENTS TO THE CONCRETE AT THE PLANT AND OR IN THE FIELD TO MEET THE REQUIRED SPECIFICATIONS. THE QC TECH WILL BE RESPONSIBLE FOR TESTING AND CERTIFYING COMPLIANCE OF ALL COMPONENTS OF THE MIX. THE QC TECH WILL NOTIFY THE CONTRACTOR AND THE PROJECT ENGINEER BEFORE EACH PLACEMENT IF THE MATERIALS DO NOT MEET THE SPECIFICATIONS, AND THOSE MATERIALS WILL NOT BE USED. THE QC TECH WILL INSPECT ALL BATCHING AND MIXING EQUIPMENT FOR PROPER OPERATION BEFORE EACH PLACEMENT. THE QC TECH WILL RECORD ANY CORRECTIVE ACTIONS THAT WAS NECESSARY QC TECH SHALL OVERSEE ALL BATCHING OPERATIONS, MAKE ANY NECESSARY ADJUSTMENTS TO THE MIX AS NEEDED,COMPLETE THE TRANSIT DELIVERY SLIP FOR EACH TRUCK LOAD. THE QC TECH WILL CONTACT BOTH THE RESIDENT ENGINEER AND THE CONTRACTOR OF CHANGES THAT MUST BE MADE DURING THE BATCHING PROCESS.

2. PRE-PRODUCTION MEETING SHALL BE HELD BETWEEN THE CONTRACTOR AND RESIDENT ENGINEER BEFORE CONCRETE PLACEMENT.

3. VTRANS WILL RETAIN THEIR RESPONSIBILITIES FOR QUALITY ACCEPTANCE TESTING.

4. VTRANS WILL MAKE FOUR EXTRA CYLINDER SETS PER CONCRETE PLACEMENT SHALL BE TAKEN FOR EARLY STRENGTH BREAKS.

5. ALL INSIDE FORM DIMENSION AND R-BAR SPACING AND CLEARANCES SHALL BE REVIEWED AND DOCUMENTED ON THE PRE-POUR INSPECTION SHEET BY THE CONTRACTOR AND THE RESIDENT ENGINEER BEFORE CASTING IS COMMENCED..

6. BEFORE FORMS ARE ERECTED THE CONTRACTOR WILL INSPECT ALL FORM-WORK FOR DAMAGE OR RESIDUAL CONCRETE. ANY DEFICIENCY IN THE FORM WORK SHALL BE CORRECTED BEFORE FORM WORK CONTINUES.

7. FORMS SHALL HAVE A GENEROUS COATING OF FORM OIL APPLIED. . CAUTION WILL BE TAKEN NOT TO HAVE PONDING OF FORM OIL IN THE BASE OF THE FORM OR ON ANY R-BAR.

8. ALL PRE-CAST WILL BE INSPECTED BY BOTH THE CONTRACTOR AND THE RESIDENT ENGINEER AND DOCUMENTED ON THE POST POUR INSPECTION SHEET. ANY MINOR REPAIRS DEFINED PER THE VTRANS CONTRACTOR-FABRICATED PRECAST CONCRETE STRUCTURES SPEC ARE AS FOLLOWS:HOLES,HONEYCOMBING OR SPALLS WHICH ARE 6" IN DIA OR LESS AND DO NOT PENETRATE MORE THAN 1". THESE REPAIRS SHALL BE MADE WITH A VERTICAL AND OVERHEAD PATCH FROM THE APPROVED PRODUCTS LIST. SURFACE VOIDS AND BUG HOLES THAT ARE LESS THAN 6" DIA AND ¼" DEEP ARE NOT REQUIRED TO BE REPAIRED

9. CONCRETE TOLERANCES LENGTH ¼", WIDTH ¼", SQUARENESS ½"

10. REINFORCING TOLERANCES +- ¼"-REINFORCING PLACEMENT +-1/4" COVER AND CLEARANCE 1" BAR SPACING .

11. EACH PIECE OF PRE-CAST SHALL BE MARKED WITH ITS UNIT NUMBER AND DATE OF CASTING

12. CURE METHODS WILL MEET THE REQUIREMENTS OF SECTION 501.17A(5). IF THE CONCRETE TEMPERATURE DROPS BELOW 50 DEGREE OR A WET CONDITION IS NOT MAINTAINED THE CURE WILL BE EXTENDED PER SECTION 501.17 (a)

13. MATCH CAST SURFACES WILL BE COATED WITH DAYTON SUPERIOR J9A WHITE WAX CURE AT A MIN. RATE OF 200 SF PER GALLON. THIS COATING WILL ACT AS A BOND BREAKER DURING MATCH CASTING.

14. PRE-CAST KEYWAYS/ AND SURFACES TO BE BONDED WILL BE SANDBLASTED TO REMOVE ANY RESIDUAL BOND BREAKER.

15. KEYWAYS SHALL BE AIR BLASTED BEFORE ERECTION TO REMOVE ALL SAND BALST MEDIA AND DIRT AMD TO PREP SURFACE FOR THE APPLICATION OF THE EPOXY BONDING COMPOUND.

16. EPOXY BONDING COMPOUND SHALL BE SIKADUR HI-MOD 32 OR = FROM THE VTRANS APPROVED PRODUCTS LIST.

17. ABUTMENTS SECTIONS AND WINGWALLS WILL BE CAST AND STORED AT OUR STAGING AREA LOCATED ON RT 131 ADJACENT TO THE CAVENDISH ER BRF 0146(13) PROJECT. PRE-CAST SECTIONS WILL BE LOADED ON LOW BED TRAILERS AND TRUCKED TO THE PITTSFIELD PROJECT ON THE DAY OF ERECTION. ALL LIFTING AND HANDLING WILL FOLLOW THE SUBMITTED LIFTING DESIGN.

REVISED 5/2/14

Vermont Agency of Transportation
RECEIVED
Pittsfield ERBRF022-1(23) Abut Approved Aended 5-7-2014.pdf
CK'D BY JG/JW OK'D BY JS
May 5, 2014
RESUBMIT NO Approved
BY KH DATE 5-7-2014

COLD RIVER BRIDGES, LLC
10 LANBRO LANE
TEL 603-756-9300 WALPOLE, NH FAX 603-756-9303

PITTSFIELD ER BRF 022-1(23)

QC PROCEDURES/PLAN

SHEET NUMBER 6

DATE: 10-30-13 SCALE:

LEVEL II REBAR REPAIR PROCEDURE:

1. EXTERIOR COATING ON LEVEL II REBAR WILL BE REPAIRED USING VALSPAR YELLOW TOUCHUP COMPONENT A AND B. THIS MATERIAL IS SUPPLIED BY THE MANUFACTURER AND IS INCLUDED WITH EACH LEVEL II REINFORCING DELIVER.

2. SURFACE SHALL BE CLEAN AND DRY AND FREE FROM RUST,DIRT,GREASE OR OTHER CONTAMINANTS.IF REINFORCING HAS BEEN EXPOSED TO SUNLIGHT FOR MORE THAN THREE WEEKS,ROUGHEN SURFACE WITH A HAND WIRE BRUSH BEFORE COATING.

3.STIR BOTH COMPONENTS A AND B

4. MIX EQUAL AMOUNTS OF COMPONENT A AND B, STIR WHILE MIXING.

5. LET MATERIAL STAND FOR 30 MINUTES PRIOR TO APPLICATIONS.

6. APPLY WITH BRUSH TO DAMAGED AREA

WINTER WORK PROVISIONS:

1.Cold River Bridges will be constructing the abutments and wingwalls inside of a heated enclosure constructed that was used to complete the pre-casting on the Cavendish ER BRF 0146 (13) project.(LOCATED ON RT 131,CAVENDISH VT)

2.Concrete will meet the temperature requirements of section 501.07.

3.Form work and r-bar will be pre-heated inside of the casting enclosure to 50 degrees with the use of radiant heat and supplemental 'salamander heaters'.This will produce a redundant source of heat.

4.After the placement of concrete a combination of radiant heat and salamanders will be used for the full length of the cure. Maintaining cast concrete temperatures above 50 degrees for cure period.

5. Digital temperature data loggers will be used to monitor cure. 1 data logger will be supplied per unit.

6. Cure water shall be heated to 50 degrees by the use of radiant, propane or electric heat source before the water is applied to the concrete.

Vermont Agency of Transportation
RECEIVED
Product ENBHW022-3(23) Abut Approved Aerated 5-7-2014.pdf

CK'D BY JG/JW OK'D BY JS

May 5, 2014

RESUBMIT NO Approved
BY KH DATE 5-7-2014

COLD RIVER BRIDGES, LLC
10 LANBRO LANE
TEL 603-756-9300 WALPOLE, NH FAX 603-756-9303

PITTSFIELD ER BRF 022-1(23)

QC PROCEDURES/PLAN

SHEET NUMBER 6A

DATE: 10-30-13 SCALE:

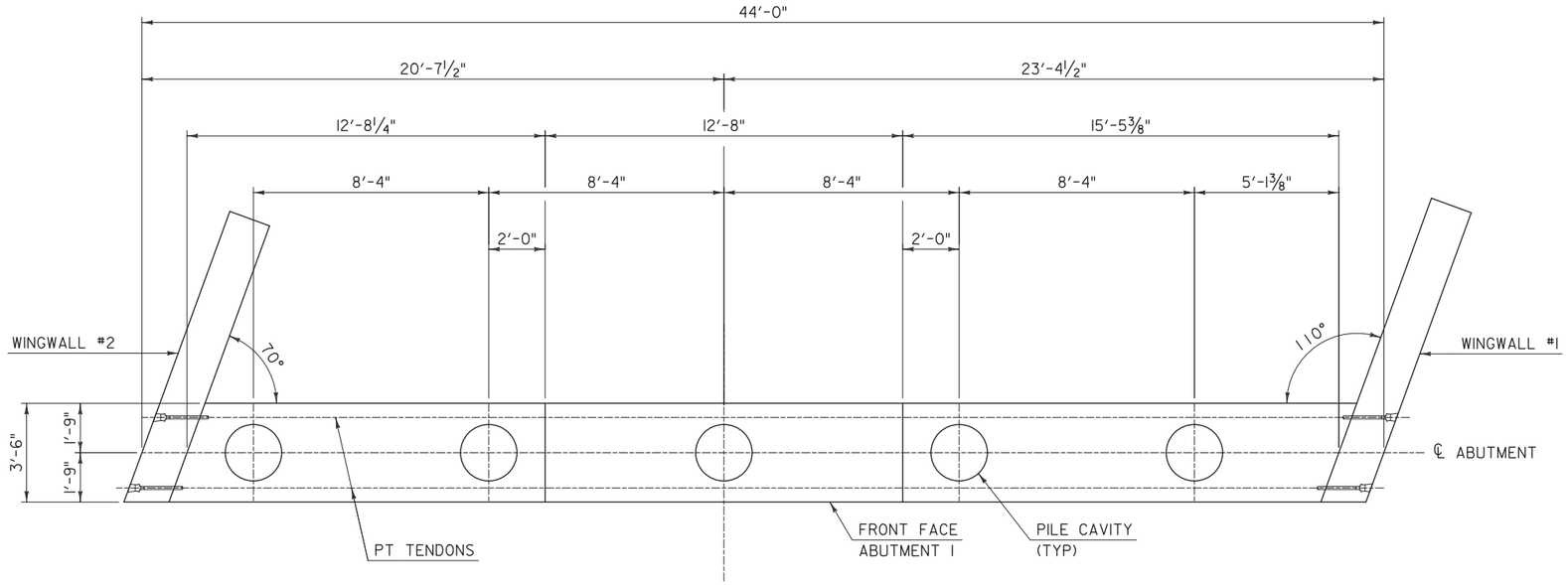

ABUTMENT #1 - PLAN

SCALE: ⅜" = 1'-0"

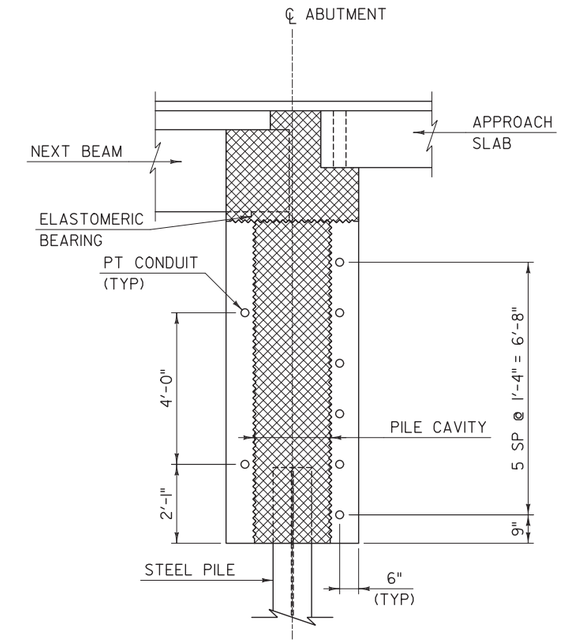

ABUTMENT TYPICAL

SCALE: ½" = 1'-0"

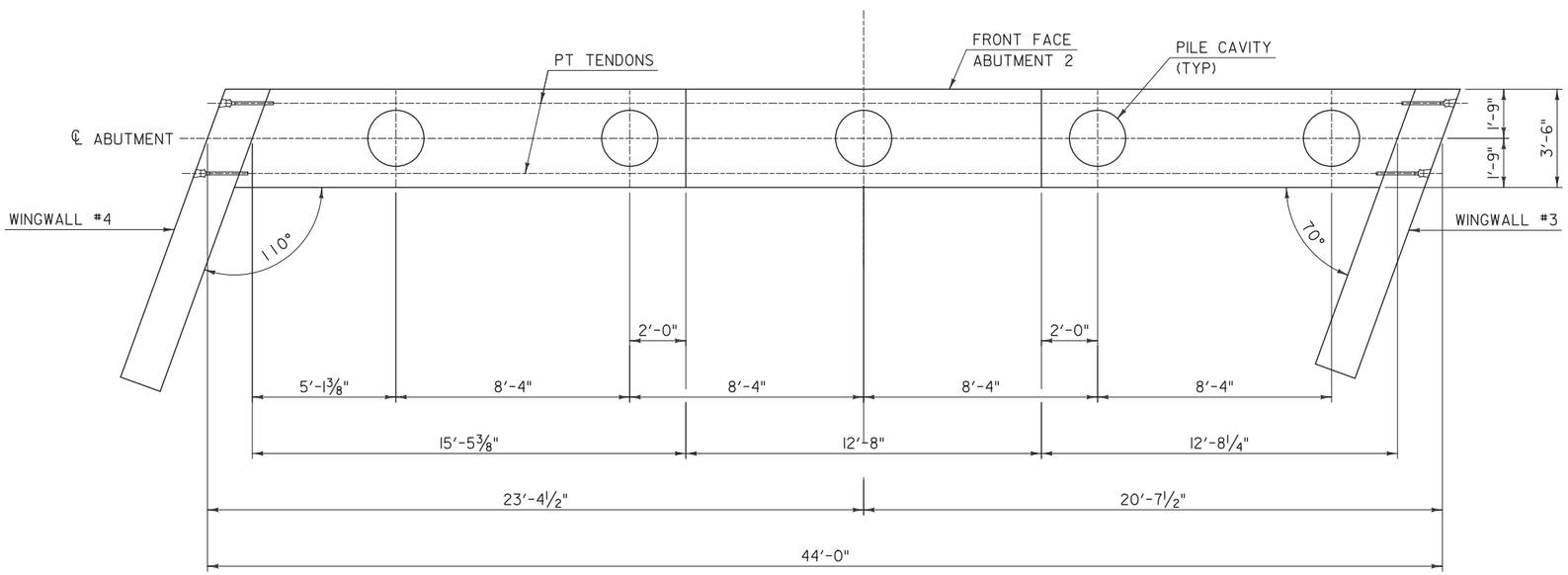

ABUTMENT #2 - PLAN

SCALE: ⅜" = 1'-0"

NOTES:

1. GEOMETRY SHOWN HEREIN IS AN UNDERSTANDING OF THE CONTRACTOR'S INTENDED PRECAST ABUTMENT CONSTRUCTION AND IS PROVIDED TO QUALIFY THE POST-TENSIONING DESIGN. DETAILS SHOWN HEREIN ARE INTENDED TO CONVEY TRANSVERSE POST-TENSIONING DESIGN ONLY. ALL GEOMETRY, MILD STEEL REINFORCEMENT, PROJECT NOTES, AND DETAILS NOT SHOWN HEREIN SHALL BE IN ACCORDANCE WITH THE ORIGINAL BRIDGE REPLACEMENT PLAN SET PREPARED BY VTRANS.

2. THERE SHALL BE A SINGLE POST-TENSIONING TENDON PER DUCT. POST-TENSIONING DESIGN VALUES ARE AS FOLLOWS:
   - TENDONS SHALL BE 0.6 INCH DIAMETER, AASHTO M 203 LOW RELAXATION 7-WIRE STRANDS.
   - JACKING FORCE PER TENDON = 42 KIPS.
   - ANCHOR SET SHALL BE ¼ INCH OR LESS.
   - APPARENT MODULUS OF ELASTICITY (TENDONS) = 28,500 KSI.

3. TENDON STRESSING SEQUENCE SHALL BEGIN NEAR THE CENTER OF THE ABUTMENT AND PROGRESS OUTWARD.

4. PILE CAVITIES SHALL BE FILLED PRIOR TO FULLY STRESSING THE TENDONS. TENDONS MAY BE JACKED TO 3 KIPS EACH PRIOR TO FILLING PILE CAVITIES.

Vermont Agency of Transportation
RECEIVED
CK'D BY JG/JW OK'D BY JS
May 5, 2014
RESUBMIT NO Approved
BY KH DATE 5-7-2014

STATE OF VERMONT
JOSHUA K. OLUND
NO. 72818
Structural Part II
LICENSED
PROFESSIONAL ENGINEER
5/5/14

sheet 7

PROJECT NAME: PITTSFIELD	
PROJECT NUMBER: ER BRF 022-1(23)	
T·Y·LIN INTERNATIONAL	
FILE NAME: z86e060bdrabut1.dgn	PLOT DATE: 3/3/2014
PROJECT LEADER: J. OLUND	DRAWN BY: S. MORGAN
DESIGNED BY: J. OLUND	CHECKED BY: D. MYERS
ABUTMENT 1 & 2 PLAN & SECTION	SHEET 1 OF 2

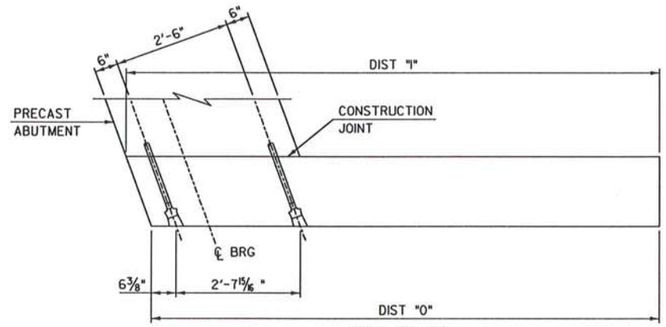

WWI PLAN

SCALE: ¾" = 1'-0"

(REINFORCING STEEL NOT SHOWN FOR CLARITY)

WINGWALL DIMENSIONS				
	WINGWALL 1	WINGWALL 2	WINGWALL 3	WINGWALL 4
DIST "I"	11'-8¾"	10'-8¼"	10'-8¼"	11'-8¾"
DIST "O"	11'-2¼"	11'-2¾"	11'-2¾"	11'-2¼"

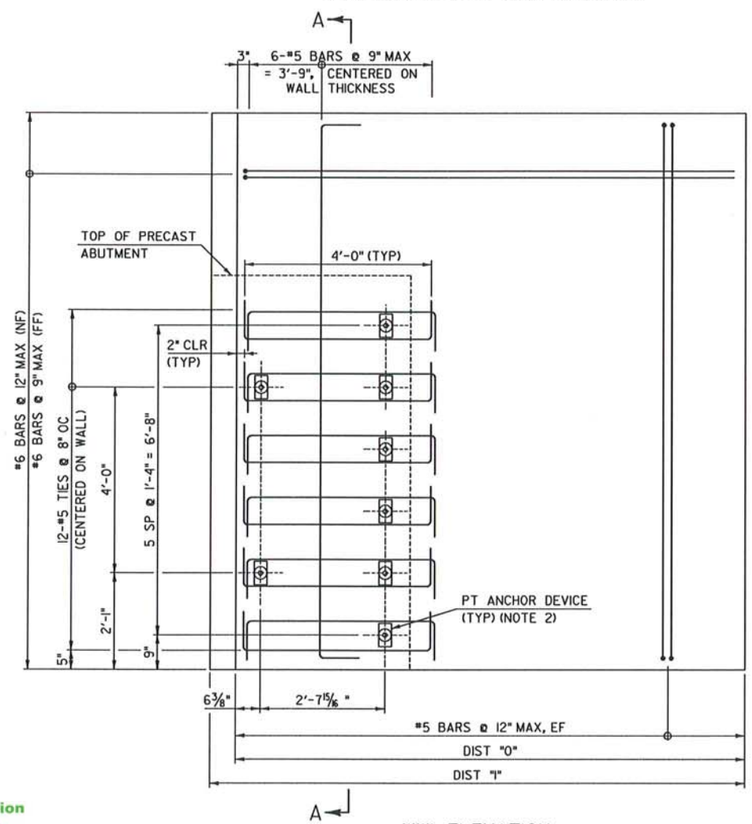

WWI ELEVATION

SCALE: ¾" = 1'-0"

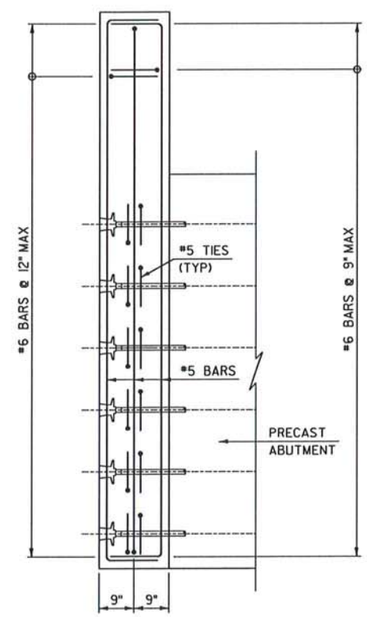

SECTION A-A WWI TYPICAL

SCALE: ¾" = 1'-0"

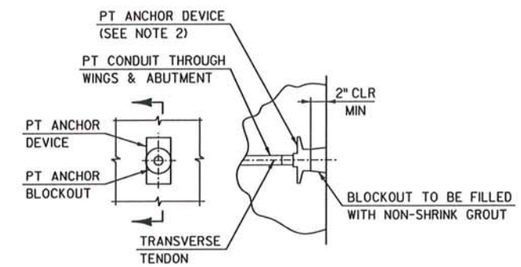

TRANSVERSE TENDON ANCHORAGE DETAIL

NOT TO SCALE

NOTES:

1. WWI SHOWN, OTHERS SHALL BE SIMILAR.
2. POST-TENSIONING ANCHOR DEVICE SHALL BE DYWIDAG ANCHOR CASTING GTI SI-06 OR SIMILAR.
3. PRECAST WINGWALL MILD STEEL REINFORCEMENT SHOWN SHALL BE USED IN PLACE OF REINFORCEMENT DETAILED IN THE ORIGINAL PLAN SET.
4. DIMENSIONS AND ELEVATIONS NOT SHOWN SHALL BE CONSISTENT WITH THE ORIGINAL PLAN SET.

STATE OF VERMONT JOSHUA K. OLUND NO. 72618 Structural Part II LICENSED PROFESSIONAL ENGINEER 3/3/14

SHEET # 8

PROJECT NAME: PITTSFIELD
PROJECT NUMBER: ER BRF 022-1(23)

T·Y·LIN INTERNATIONAL

FILE NAME: z86e060bdrabutdet.dgn
PROJECT LEADER: J. OLUND
DESIGNED BY: T. POULIN
WINGWALL DETAILS

PLOT DATE: 3/3/2014
DRAWN BY: S. MORGAN
CHECKED BY: J. OLUND
SHEET 2 OF 2

Vermont Agency of Transportation
RECEIVED
CK'D BY JW/SL/JR/JG OK'D BY WL
April 7, 2014
RESUBMIT NO Approved
BY KH DATE 4-8-2014

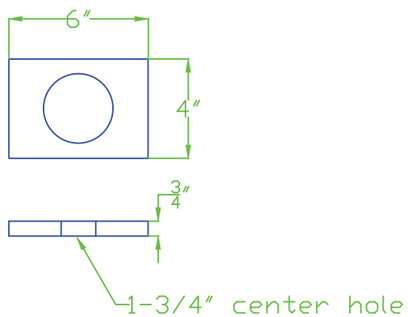

BEARING PLATE DETAIL
NTS

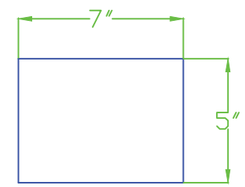

TYPICAL PT BLOCK OUT
NTS

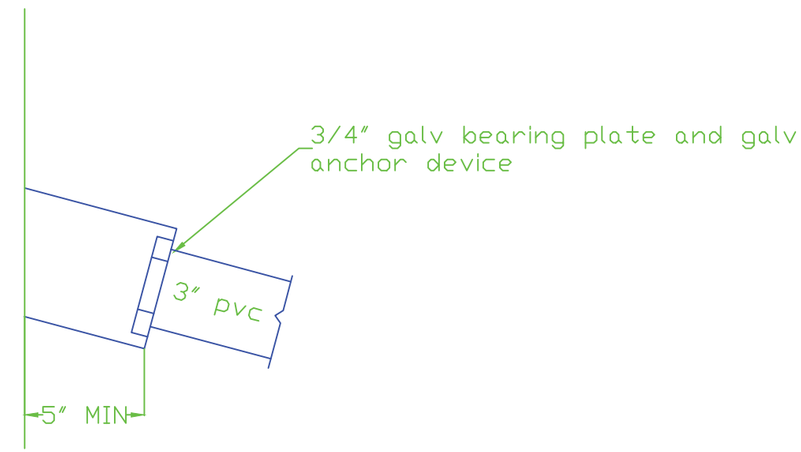

TYPICAL PT BLOCK OUT
NTS

NOTES:
1. ALL PT HARDWARE SHALL BE GALVANIZED.
2. ALL PT DUCTS ARE 3" SCH 40 PVC
3. PT DUCTS ARE NOT GROUTED, THE PT BLOCK-OUTS WILL BE GROUTED AFTER FINAL POST TENSIONING. BLOCK-OUTS WILL BE GROUTED WITH A PRODUCT FROM THE VTRANS APPROVED PRODUCTS LIST.
4. ALL POST TENSIONING TO BE COMPLETED BY CONSTRUCTIVE SERVICES, INC
5. PT DETAIL DOES NOT UTILIZE FORM ALIGNER AS SHOWN ON TY-LYN DRAWINGS. SYSTEM IS EQUAL AND HAS BEEN APPROVED BY TY-LYN

REVISED 5/2/14

Vermont Agency of Transportation
RECEIVED
CK'D BY JG/JW OK'D BY JS
May 5, 2014
RESUBMIT NO Approved
BY KH DATE 5-7-2014

COLD RIVER BRIDGES, LLC
10 LANBRO LANE
TEL 603-756-9300 WALPOLE, NH FAX 603-756-9303

PITTSFIELD ER BRF 022-1(23)

POST-TENSION DETAILS

SHEET NUMBER
8A

DATE: 4-2-14 scale:

STATE OF VERMONT
AGENCY OF TRANSPORTATION
MATERIAL AND RESEARCH SECTION - STRUCTURAL CONCRETE UNIT

STRUCTURAL CONCRETE MIX DESIGN SUBMISSION

Agency Use Only	
Mix ID	PP14-060
Mix Design #	060
Approved by	jwild
Approved Date	4/5/2014
Spec Book Year	2011

Concrete class: Precast Prestressed
Additional Description
Ready Mix Supplier: CARROLL CONCRETE - CHARLESTOWN, NH
Designed By Scott Jordan
Design strength 5000 PSI
Design by dry weight or saturated surface dry: SSD

Mix designs are valid for a 12 month period from date of approval or unless there is a change in material, material property or design parameter.

Cement: 701.02	Source:			Specific Gravity			lb/cy	0.00 cf
	Brand Name:							
Cement Type III: 701.04	Source:			Specific Gravity			lb/cy	0.00 cf
	Brand Name:							
Blended Cement: 701.06	Source:	LAFARGE - TERCEM - MONTREAL, EAST PLANT		Specific Gravity	3.020	705	lb/cy	3.74 cf
	Brand Name:							
Cement with Slag: 701.07	Source:			Specific Gravity			lb/cy	0.00 cf
	Brand Name:							
Pozzolan: 725.03(a)	Source:			Specific Gravity			lb/cy	0.00 cf
	Brand Name:							
Fly Ash: 725.03(a)	Source:			Specific Gravity			lb/cy	0.00 cf
	Brand Name:							
Silica Fume: 725.03(b)	Source:			Specific Gravity			lb/cy	0.00 cf
	Brand Name:							
Slag: 725.03(c)	Source:			Specific Gravity			lb/cy	0.00 cf
	Brand Name:							
Water					32 gals	267	lb/cy	4.28 cf
Air Content Target					7.0 %			1.89 cf
Coarse Aggregate 3/8" 704.02A	Source:		Absorption	Specific Gravity			lb/cy	0.00 cf
Coarse Aggregate 3/4" 704.02B	Source:	COLD RIVER MATERIALS PIT - N WALPOLE, NH	Absorption 0.80	Specific Gravity	2.880	1688	lb/cy	9.39 cf
Coarse Aggregate 1 1/2" 704.02C	Source:		Absorption	Specific Gravity			lb/cy	0.00 cf
Fine Aggregate: 704.01	Source:	NEWPORT SAND & GRAVEL - NEWPORT, NH	Absorption 0.90	Specific Gravity	2.670	1283	lb/cy	7.70 cf
				Fineness Modulus	2.83			
Air Entrainment Admixture 725.02(b)	Source:	MASTER BUILDERS INC - MESQUITE, TX		Specific Gravity		1.5	oz/cy	
	Brand Name:	MasterAir AE 200 / Micro Air						
Retarder Admixture: 725.02(c)	Source:	MASTER BUILDERS INC - MESQUITE, TX		Specific Gravity		1	oz/cwt	
	Brand Name:	MasterSet R100 / Pozzolith 100XR						
High Range Water Reducer Admixture: 725.02(h)	Source:	MASTER BUILDERS INC - MESQUITE, TX		Specific Gravity		3	oz/cwt	
	Brand Name:	MasterGlenium 7500						
Other Admixtures:	Source:			Specific Gravity		2	oz/cwt	0.00 cf
	Brand Name:	BASF, MasterSure Z60						
	Source:			Specific Gravity				0.00 cf
	Brand Name:							
	Source:			Specific Gravity				0.00 cf
	Brand Name:							
				TOTAL	47.570	3943	lb	27.00 cf

Approved by Jason Wild, VAOT Composite Materials Engineer 4/5/14. For Contractor Self Performing Precast. The supplied strength data does have a couple recent samples and shows adequate strength is achievable based on proper curing conditions

Maximum Water/Cementitious Ratio 0.44
Maximum Water (gal/cy) 37.2
Slump Min/Max (inch) 4.0 min 7.0 max
Air Content Min/Max (%) 5.0 min 9.0 max
Design Unit Wt. (lb/cf) 146.04

Notes:

2014 Construction season 2011 specification 5000-psi precast 2-10-14

NON STR. THK.	STRUCT. THK.	WEIGHT	WIDTH	HEIGHT	NO. REQ'D.	PANEL NUMBER OR TYPE
	18 1/8"	31.4 kips	11'-8 3/4"	12'-1"	1	WW1

Vermont Agency of Transportation
RECEIVED
CK'D BY JW/SL/JR/JG OK'D BY WL
April 7, 2014
RESUBMIT NO Approved
BY KH DATE 4-8-2014

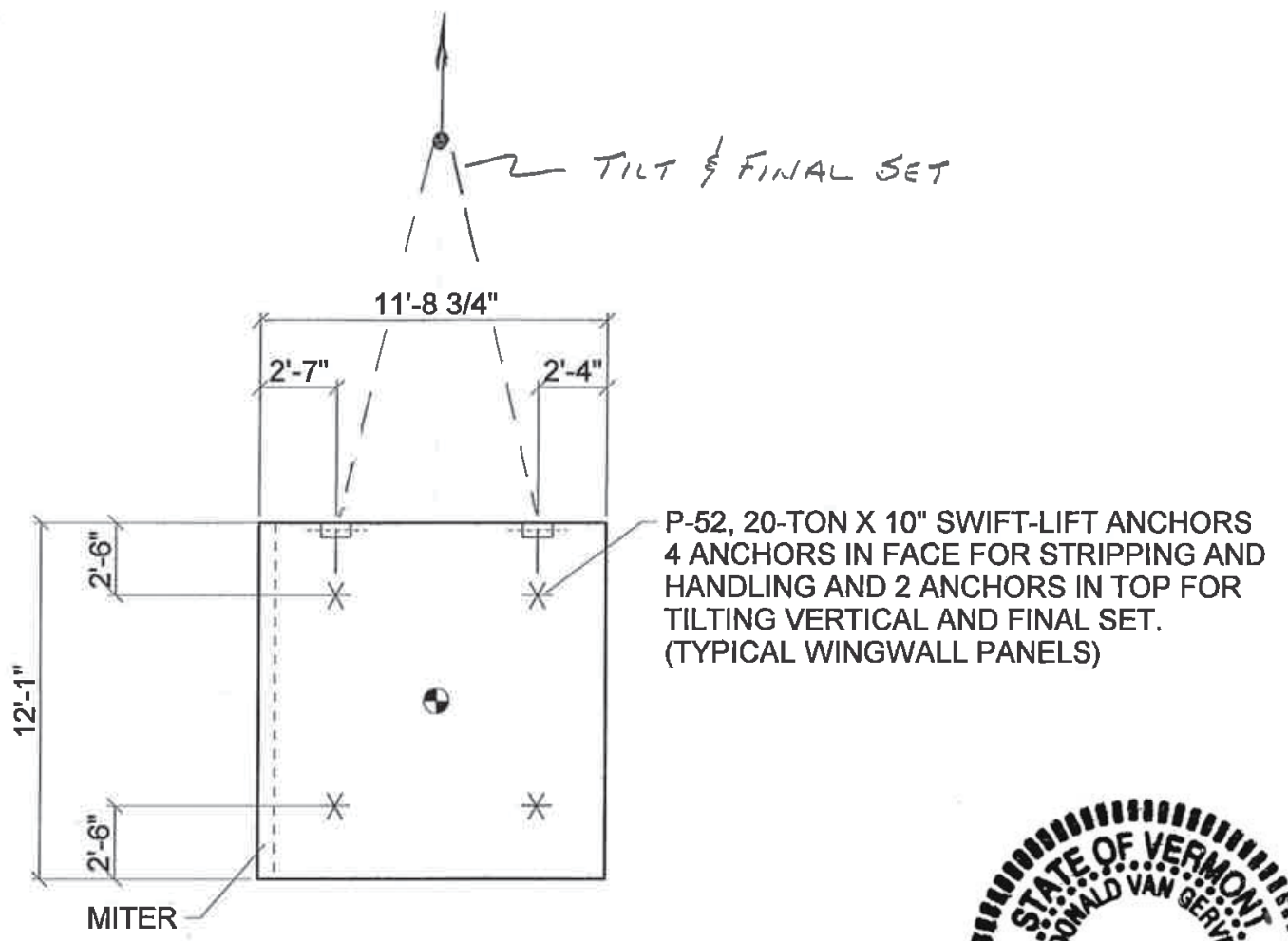

STATE OF VERMONT
DONALD VAN GERVE
NO. 8012
STRUCTURAL
LICENSED
PROFESSIONAL ENGINEER
3/14/14

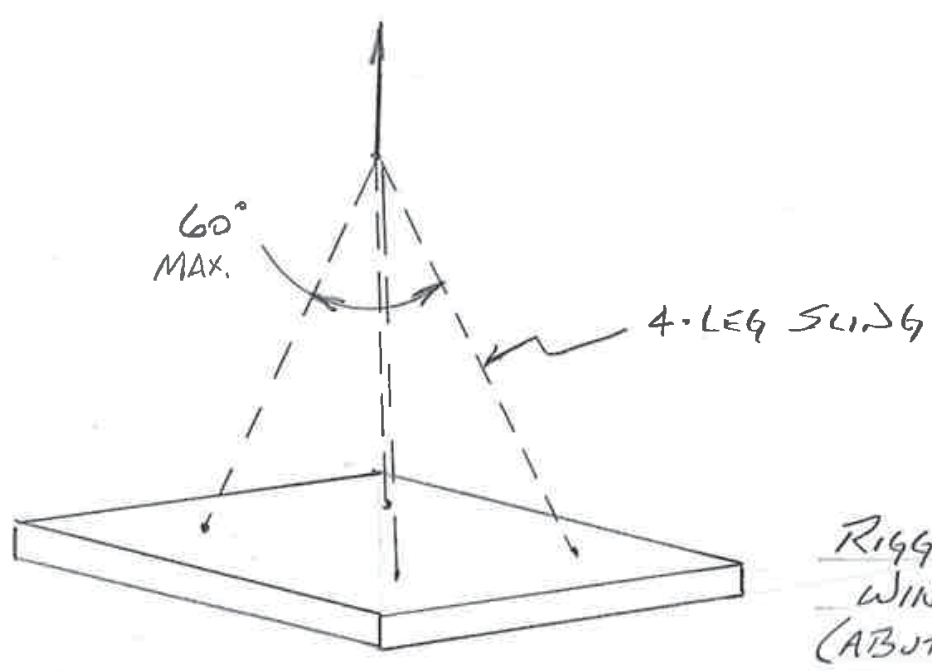

RIGGING DETAIL
WING-WALL PANELS
(ABUTMENTS SIMILAR)

W B F

VERIFY ALL DIMENSIONS PRIOR TO POURING PANEL

MINIMUM COMPRESSIVE STRENGTH REQ'D.= 4,000 PSI

Construction Period Design Wind Speed	84 mph	TOTAL BRACE LOAD =	B=	W=	F=	BRACE REQ'D.:

GROUND RELEASE II TILT-UP SYSTEM

This drawing is furnished solely for the purpose of clarifying the proper use, installation and application of products supplied by Dayton Superior. Dayton Superior does not assume any responsibility for the correctness of structural designs or dimensions furnished by others. These drawings are intended merely to supplement the architectural and structural drawings and are to be used only in conjunction with them. In no way are these drawings to be interpreted as shop drawings for panel fabrication.

X̄ 5'-11 15/16"	ΔX .13 >	CY= 7.7	SCALE:	RIGGING DETAILS
Ȳ 6'-0 1/2"	2ΔX .26	GROSS AREA 141.7	1/8"	F32
PANEL VIEWED FROM:	CHECKED BY	NET AREA 141.7	JOB NO.	SHEET
INSIDE	LAYOUT BY BP	DATE 3/14/14	14120	1 OF 20

NOTE: INSERT AND BRACING DESIGN SHOWN IS BASED ON THE USE OF DAYTON SUPERIOR PRODUCTS ONLY!

NON STR. THK.	STRUCT. THK.	WEIGHT	WIDTH	HEIGHT	NO. REQ'D.	PANEL NUMBER OR TYPE
	18"	28.8 kips	11'-2 3/4"	11'-8 1/8"	1	WW2

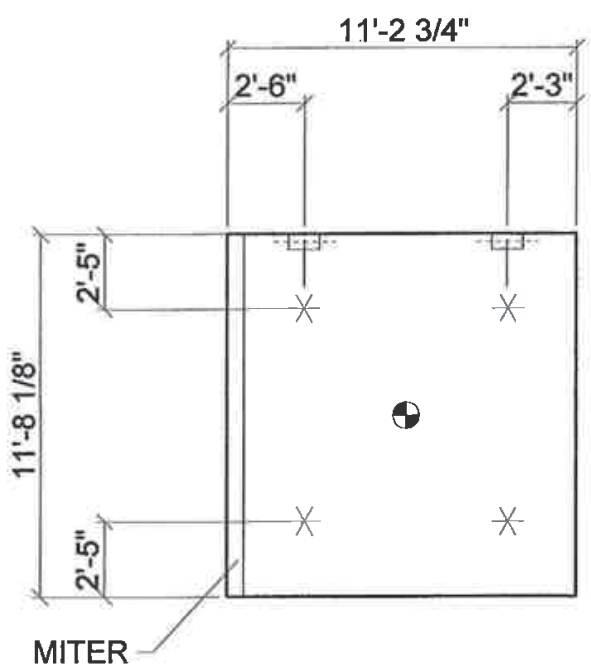

Vermont Agency of Transportation
RECEIVED
CK'D BY JW/SL/JR/JG OK'D BY WL
April 7, 2014
RESUBMIT NO Approved
BY KH DATE 4-8-2014

STATE OF VERMONT
DONALD VAN GERVE
NO. 8012
STRUCTURAL
LICENSED
PROFESSIONAL ENGINEER
3/14/14

W B F

VERIFY ALL DIMENSIONS PRIOR TO POURING PANEL

MINIMUM COMPRESSIVE STRENGTH REQ'D.= 4,000 PSI

Construction Period Design Wind Speed 84 mph	TOTAL BRACE LOAD =	B=	W=	F=	BRACE REQ'D.:

GROUND RELEASE II TILT-UP SYSTEM

This drawing is furnished solely for the purpose of clarifying the proper use, installation and application of products supplied by Dayton Superior. Dayton Superior does not assume any responsibility for the correctness of structural designs or dimensions furnished by others. These drawings are intended merely to supplement the architectural and structural drawings and are to be used only in conjunction with them. In no way are these drawings to be interpreted as shop drawings for panel fabrication.

$\bar{X}$ 5'-8 15/16"	ΔX .13 >	CY= 7.1	SCALE:	RIGGING DETAILS
$\bar{Y}$ 5'-10 1/16"	$2\Delta X$ .26	GROSS AREA 131.1	1/8"	F32
PANEL VIEWED FROM:	CHECKED BY	NET AREA 131.1	JOB NO.	SHEET
INSIDE	LAYOUT BY BP	DATE 3/14/14	14120	2 OF 20

NOTE: INSERT AND BRACING DESIGN SHOWN IS BASED ON THE USE OF DAYTON SUPERIOR PRODUCTS ONLY!

NON STR. THK.	STRUCT. THK.	WEIGHT	WIDTH	HEIGHT	NO. REQ'D.	PANEL NUMBER OR TYPE
	18"	29.8 kips	11'-2 3/4"	12'-1"	1	WW3

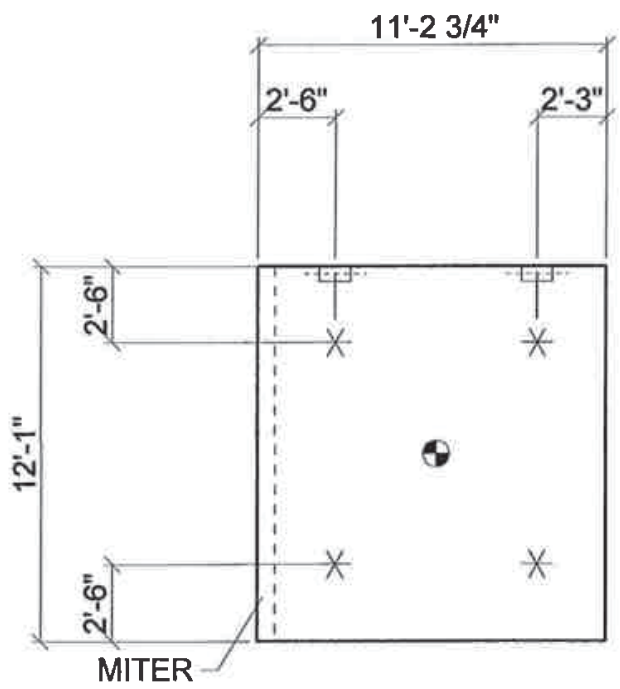

Vermont Agency of Transportation
RECEIVED
CK'D BY JW/SL/JR/JG OK'D BY WL
April 7, 2014
RESUBMIT NO Approved
BY KH DATE 4-8-2014

STATE OF VERMONT
DONALD VAN GERVE
NO. 8012
STRUCTURAL
LICENSED
PROFESSIONAL ENGINEER
3/14/14

W B F VERIFY ALL DIMENSIONS PRIOR TO POURING PANEL

MINIMUM COMPRESSIVE STRENGTH REQ'D.= 4,000 PSI

Construction Period Design Wind Speed 84 mph	TOTAL BRACE LOAD =	B=	W=	F=	BRACE REQ'D.:	
GROUND RELEASE II TILT-UP SYSTEM This drawing is furnished solely for the purpose of clarifying the proper use, installation and application of products supplied by Dayton Superior. Dayton Superior does not assume any responsibility for the correctness of structural designs or dimensions furnished by others. These drawings are intended merely to supplement the architectural and structural drawings and are to be used only in conjunction with them. In no way are these drawings to be interpreted as shop drawings for panel fabrication.	$\bar{X}$ 5'-8 15/16"	ΔX .13 >	CY= 7.4	SCALE: 1/8"	RIGGING DETAILS F32	
	$\bar{Y}$ 6'-0 1/2"	$2\Delta X$ .26	GROSS AREA 135.7			
	PANEL VIEWED FROM: INSIDE	CHECKED BY	NET AREA 135.7	JOB NO. 14120	SHEET 3 OF 20	
		LAYOUT BY BP	DATE 3/14/14			

NOTE: INSERT AND BRACING DESIGN SHOWN IS BASED ON THE USE OF DAYTON SUPERIOR PRODUCTS ONLY!

NON STR. THK.	STRUCT. THK.	WEIGHT	WIDTH	HEIGHT	NO. REQ'D.	PANEL NUMBER OR TYPE
	18"	30.1 kips	11'-8 3/4"	11'-8"	1	WW4

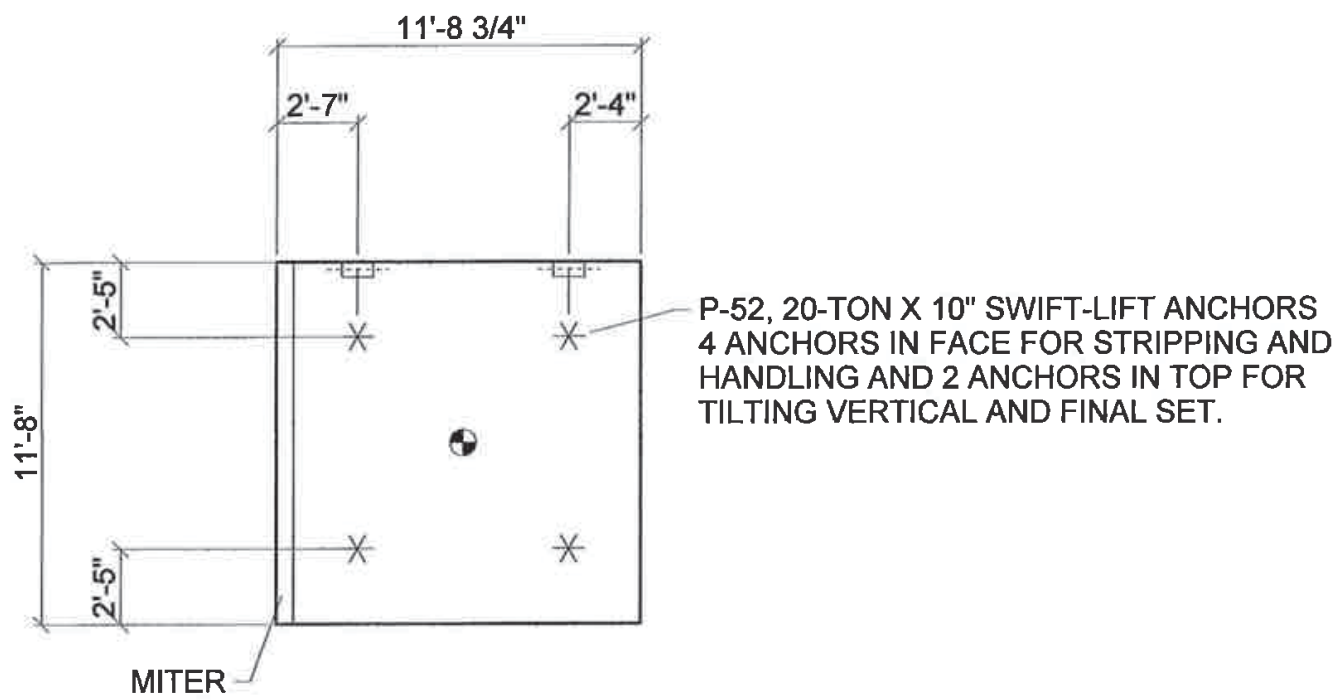

Vermont Agency of Transportation
RECEIVED
CK'D BY JW/SL/JR/JG OK'D BY WL
April 7, 2014
RESUBMIT NO Approved
BY KH DATE 4-8-2014

STATE OF VERMONT
DONALD VAN GERVE
NO. 8012
STRUCTURAL
LICENSED
PROFESSIONAL ENGINEER
3/14/14

W B F

VERIFY ALL DIMENSIONS PRIOR TO POURING PANEL

MINIMUM COMPRESSIVE STRENGTH REQ'D.= 4,000 PSI

Construction Period Design Wind Speed 84 mph	TOTAL BRACE LOAD =	B=	W=	F=	BRACE REQ'D.:

GROUND RELEASE II TILT-UP SYSTEM

This drawing is furnished solely for the purpose of clarifying the proper use, installation and application of products supplied by Dayton Superior. Dayton Superior does not assume any responsibility for the correctness of structural designs or dimensions furnished by others. These drawings are intended merely to supplement the architectural and structural drawings and are to be used only in conjunction with them. In no way are these drawings to be interpreted as shop drawings for panel fabrication.

$\bar{X}$ 5'-11 15/16"	ΔX .13 >	CY= 7.4	SCALE: 1/8"	RIGGING DETAILS F32
$\bar{Y}$ 5'-10"	$2\Delta X$ .26	GROSS AREA 136.8		
PANEL VIEWED FROM: INSIDE	CHECKED BY	NET AREA 136.8	JOB NO. 14120	SHEET 4 OF 20
	LAYOUT BY BP	DATE 3/14/14		

NOTE: INSERT AND BRACING DESIGN SHOWN IS BASED ON THE USE OF DAYTON SUPERIOR PRODUCTS ONLY!

NON STR. THK.	STRUCT. THK.	WEIGHT	WIDTH	HEIGHT	NO. REQ'D.	PANEL NUMBER OR TYPE
	98 3/8"	46.9 kips	13'-4"	3'-6"	1	13.33ft. ABUTMENT SECTION

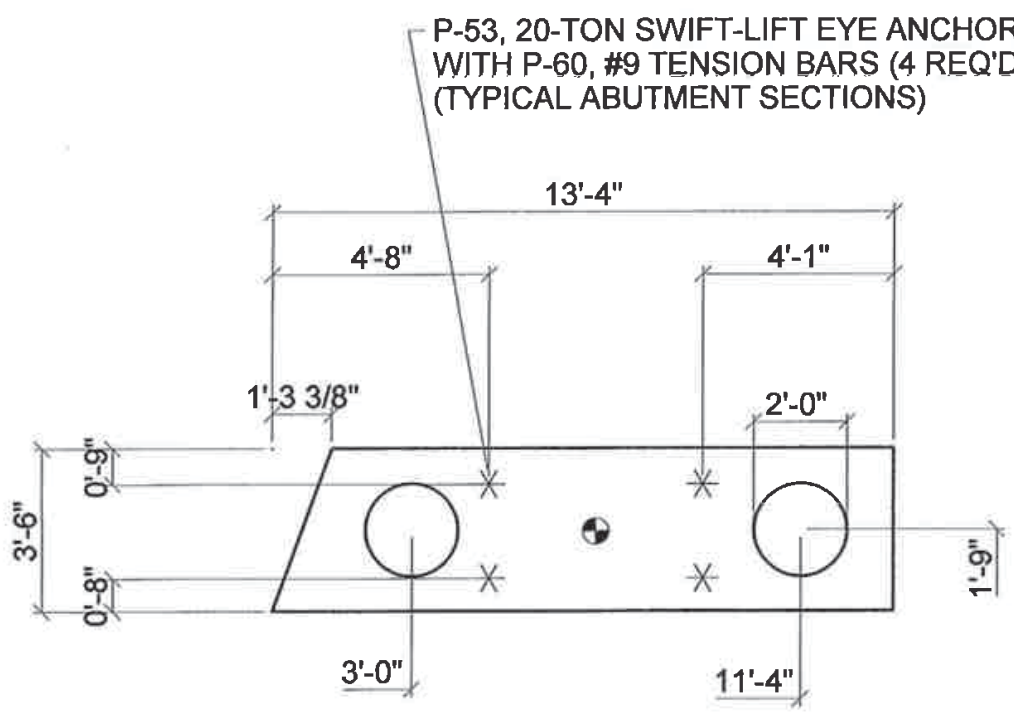

Vermont Agency of Transportation
RECEIVED
CK'D BY JW/SL/JR/JG OK'D BY WL
April 7, 2014
RESUBMIT NO Approved
BY KH DATE 4-8-2014

STATE OF VERMONT
DONALD VAN GERVE
NO. 8012
STRUCTURAL
LICENSED
PROFESSIONAL ENGINEER
3/14/14

W B F

VERIFY ALL DIMENSIONS PRIOR TO POURING PANEL

MINIMUM COMPRESSIVE STRENGTH REQ'D.= 4,000 PSI

Construction Period Design Wind Speed 84 mph	TOTAL BRACE LOAD =	B=	W=	F=	BRACE REQ'D.:

GROUND RELEASE II TILT-UP SYSTEM

This drawing is furnished solely for the purpose of clarifying the proper use, installation and application of products supplied by Dayton Superior. Dayton Superior does not assume any responsibility for the correctness of structural designs or dimensions furnished by others. These drawings are intended merely to supplement the architectural and structural drawings and are to be used only in conjunction with them. In no way are these drawings to be interpreted as shop drawings for panel fabrication.

$\bar{X}$ 6'-11 7/16"	ΔX .28 >	CY= 11.6	SCALE:	RIGGING DETAILS
$\bar{Y}$ 1'-8 9/16"	$2\Delta X$ .57	GROSS AREA 46.7	3/16"	F22
PANEL VIEWED FROM: INSIDE	CHECKED BY	NET AREA 38.1	JOB NO.	SHEET
	LAYOUT BY BP	DATE 3/14/14	14120	5 OF 20

NOTE: INSERT AND BRACING DESIGN SHOWN IS BASED ON THE USE OF DAYTON SUPERIOR PRODUCTS ONLY!

NON STR. THK.	STRUCT. THK.	WEIGHT	WIDTH	HEIGHT	NO. REQ'D.	PANEL NUMBER OR TYPE
	100 1/2"	51.8 kips	12'-8"	3'-6"	2	12.67ft. ABUTMENT SECTION

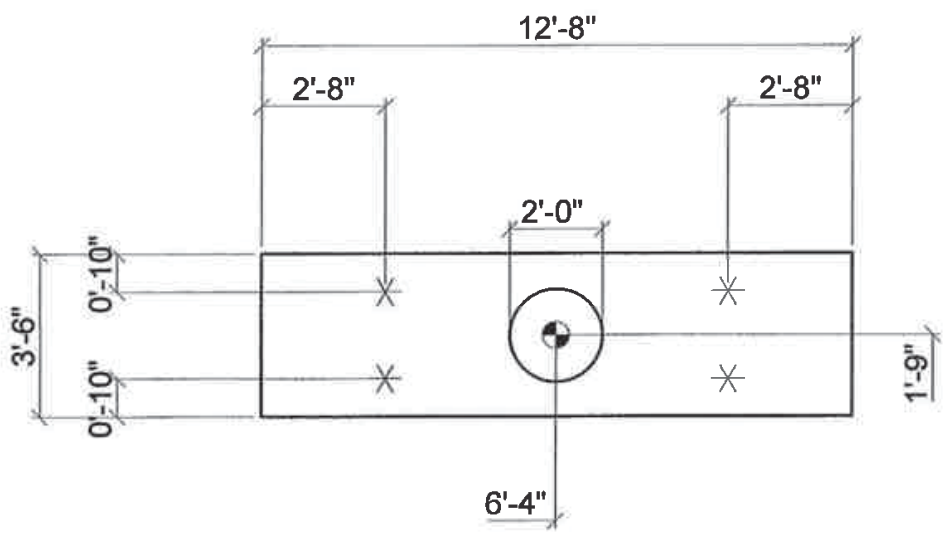

Vermont Agency of Transportation
RECEIVED
CK'D BY JW/SL/JR/JG OK'D BY WL
April 7, 2014
RESUBMIT NO Approved
BY KH DATE 4-8-2014

STATE OF VERMONT
DONALD VAN GERVE
NO. 8012
STRUCTURAL
LICENSED
PROFESSIONAL ENGINEER
3/14/14

W B F VERIFY ALL DIMENSIONS PRIOR TO POURING PANEL

MINIMUM COMPRESSIVE STRENGTH REQ'D.= 4,000 PSI

Construction Period Design Wind Speed 84 mph	TOTAL BRACE LOAD =	B=	W=	F=	BRACE REQ'D.:

GROUND RELEASE II TILT-UP SYSTEM

This drawing is furnished solely for the purpose of clarifying the proper use, installation and application of products supplied by Dayton Superior. Dayton Superior does not assume any responsibility for the correctness of structural designs or dimensions furnished by others. These drawings are intended merely to supplement the architectural and structural drawings and are to be used only in conjunction with them. In no way are these drawings to be interpreted as shop drawings for panel fabrication.

$\bar{X}$ 6'-4"	ΔX .0 <	CY= 12.8	SCALE: 3/16"	RIGGING DETAILS F22	
$\bar{Y}$ 1'-9"	$2\Delta X$ .0	GROSS AREA 44.3			
PANEL VIEWED FROM: INSIDE	CHECKED BY	NET AREA 41.2	JOB NO. 14120	SHEET 6 OF 20	
	LAYOUT BY BP	DATE 3/14/14			

NOTE: INSERT AND BRACING DESIGN SHOWN IS BASED ON THE USE OF DAYTON SUPERIOR PRODUCTS ONLY!

NON STR. THK.	STRUCT. THK.	WEIGHT	WIDTH	HEIGHT	NO. REQ'D.	PANEL NUMBER OR TYPE
	103"	61.5 kips	16'-1 1/8"	3'-6"	1	16.09ft. ABUTMENT SECTION

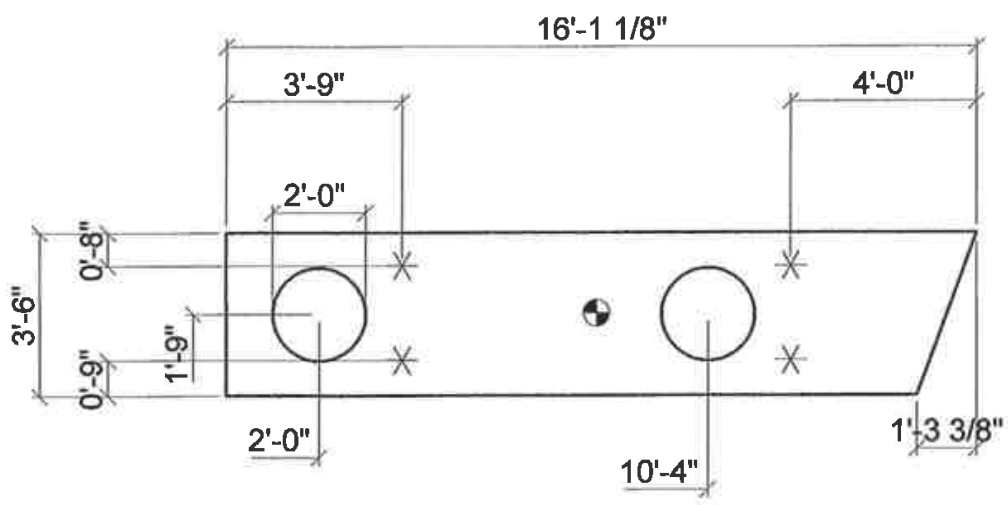

Vermont Agency of Transportation
RECEIVED
Filedved ERBRF 002-1(23) Abutment Submittal 4-7-2014.pdf
CK'D BY JW/SL/JR/JG OK'D BY WL
April 7, 2014
RESUBMIT NO Approved
BY KH DATE 4-8-2014

STATE OF VERMONT
DONALD VAN GERVE
NO.8012
STRUCTURAL
LICENSED
PROFESSIONAL ENGINEER
3/14/14

W B F

VERIFY ALL DIMENSIONS PRIOR TO POURING PANEL

MINIMUM COMPRESSIVE STRENGTH REQ'D.= 4,000 PSI

Construction Period Design Wind Speed	84 mph	TOTAL BRACE LOAD =	B=	W=	F=	BRACE REQ'D.:

GROUND RELEASE II TILT-UP SYSTEM

This drawing is furnished solely for the purpose of clarifying the proper use, installation and application of products supplied by Dayton Superior. Dayton Superior does not assume any responsibility for the correctness of structural designs or dimensions furnished by others. These drawings are intended merely to supplement the architectural and structural drawings and are to be used only in conjunction with them. In no way are these drawings to be interpreted as shop drawings for panel fabrication.

X̄ 7'-11 1/4"	△X -.11 <	CY= 15.2	SCALE: 3/16"	RIGGING DETAILS F22	
Ȳ 1'-9 5/16"	2△X -.22	GROSS AREA 56.3			
PANEL VIEWED FROM: INSIDE	CHECKED BY	NET AREA 47.8	JOB NO. 14120	SHEET 7 OF 20	
	LAYOUT BY BP	DATE 3/14/14			

NOTE: INSERT AND BRACING DESIGN SHOWN IS BASED ON THE USE OF DAYTON SUPERIOR PRODUCTS ONLY!

Drawing Sheet : R01A							BAR LIST												
Bar Mark	Qty	Size	Total Length	Type	'A'	'B'	'C'	'D'	'E'	'F'	'G'	'H'	'J'	'K'	'O'	'R'
5A03	48	#5	6'-4"	17		1'-2"	4'-0"	1'-2"								
5A04	12	#5	13'-11"	17		1'-2"	11'-7"	1'-2"								
5A06	12	#5	12'-10"	2	10"	11'-2"					10"					
5A07	50	#5	13'-7"	17		1'-2"	11'-3"	1'-2"								
5A31	50	#5	14'-0"	17		1'-2"	11'-8"	1'-2"								
5A32	96	#5	3'-4"	17		1'-2"	1'-0"	1'-2"								
6A27	13	#6	12'-4"	3		10'-10 1/4"	1'-1 1/4"					1'-1 1/4"		4"	11'-2 1/4"	
6A28	17	#6	12'-3"	H91		1'-4"	11'-2 1/4"					1'-1"		3 1/4"		
6A29	25	#6	11'-9 1/4"	H91		1'-4"	10'-9"					1'-1"		3 1/4"		
6A30	16	#6	11'-5 1/4"	3		10'-4"	1'-1 1/4"					1'-1 1/4"		4"	10'-8"	
6A33	17	#6	11'-4 1/4"	3		10'-3"	1'-1 1/4"					1'-1 1/4"		4"	10'-7"	
6A35	16	#6	12'-3 1/4"	H91		1'-4"	11'-3"					1'-1"		3 1/4"		
6A36	12	#6	11'-11 1/4"	3		10'-10"	1'-1 1/4"					1'-1 1/4"		4"	11'-2"	
9A01	79	#9	20'-11"	1	1'-3"	19'-8"							11 1/4"			

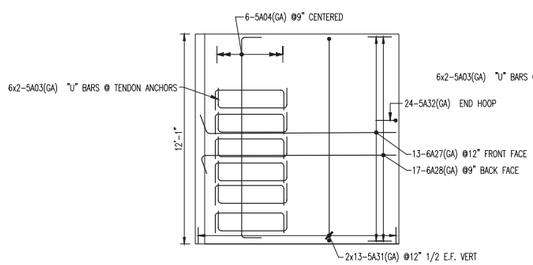

WINGWALL ELEVATION #1 REINF

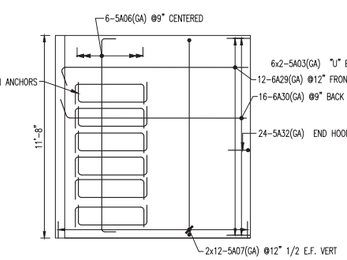

WINGWALL ELEVATION #2 REINF

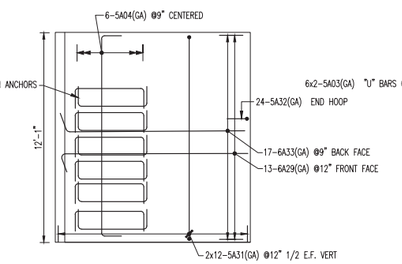

WINGWALL ELEVATION #3 REINF

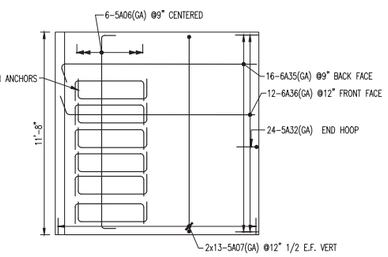

WINGWALL ELEVATION #4 REINF

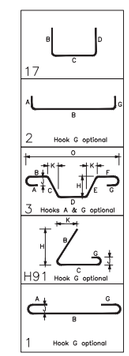

(GA) IS FOR DUAL COATED REINF

Vermont Agency of Transportation
RECEIVED
CK'D BY JW/SL/JR/JG OK'D BY WL
April 7, 2014
RESUBMIT NO Approved
BY KH DATE 4-8-2014

LAP CHART-U.N.O.		
#11		
#10		
#9		
#8		
#7		
#6		
#5		
#4		
#3		
SIZE	TOP BARS ★	OTHER BARS

★ -Top bars are horiz. bars with more than 12" of concrete cast below the bars.

No.	Description	Date	By
1	CORRECTION/APPROVAL	4-2-14	TRH
0	APPROVAL	3-14-14	TRH

Revisions and Issue Record

The full intent and purpose of this drawing is the placing of reinforcing steel bars ONLY. It is NOT to be used as a means of communication between the Architect, Engineer, Contractor or any other Sub-trades.

THIS DRAWING IS NOT TO BE SCALED.

Harris Rebar Barker Steel — National Strength. Local Service.

DETAILED AT:
CANAAN
NEW HAMPSHIRE

Project: PITTSFIELD ER BRF 022
PITTSFIELD, VT

Drawing: WINGWALLS & APPROACH SLABS

Customer: COLD RIVER BRIDGES

Engineer:

Refer to Release:

Date	Drawn	Chkd.	JOB No.	Dwg. No.
3-7-14	TRH		33505152	R01A

W:\hill\Projects\33505152\Placing Drawings\DWGs\R01.dwg

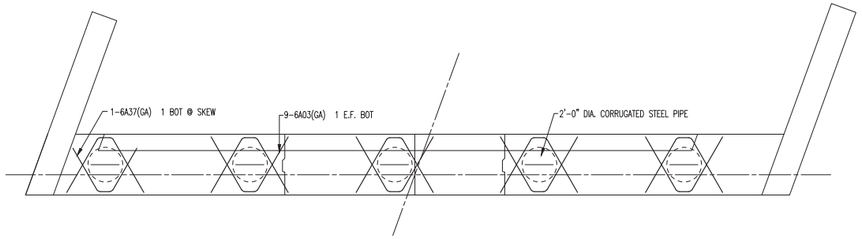

POST TENSION DUCTS NOT SHOWN FOR CLARITY

ABUTMENT #1 PLAN VIEW

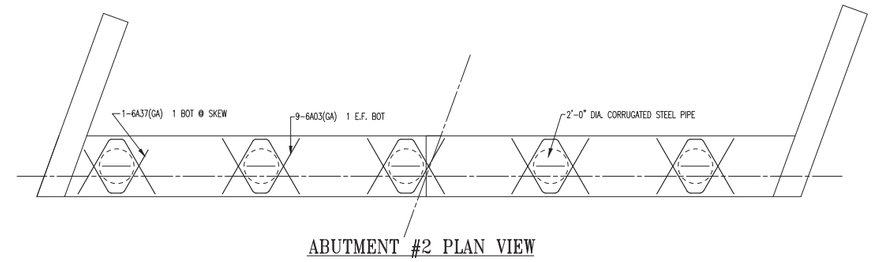

ABUTMENT #2 PLAN VIEW

✱ = 1 TEST BAR INCLUDED IN QUANTITY

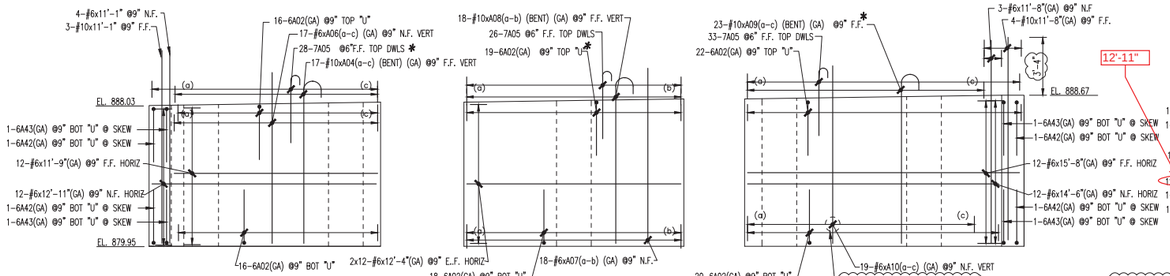

ABUTMENT 1 ELEVATION

12'-11"

NEAR FACE VERTICALS TO BE FIELD ADJUSTED FOR NEXT BEAM LAYOUT

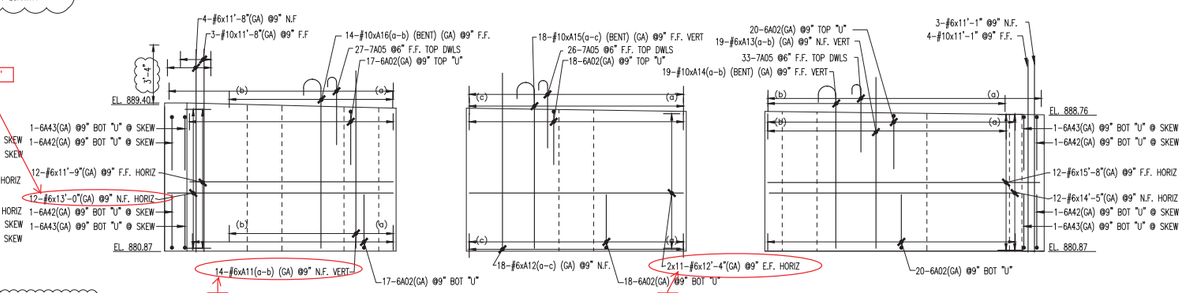

ABUTMENT 2 ELEVATION

(GA) IS FOR DUAL COATED REINF

DUAL COATED MEETS ASTM A 1055-10
STEEL IS ASTM A 615 OR A 706 GRADE 60

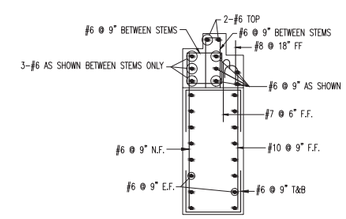

REINFORCING TYPICAL

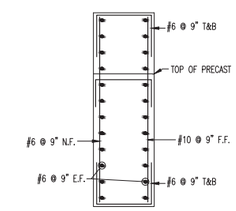

REINFORCING TYPICAL CHEEK WALL

Drawing Sheet : R01 — BAR LIST

Bar Mark	Qty	Size	Total Length	Type	'A'	'B'	'C'	'D'	'E'	'F'	'G'	'H'	'J'	'K'	'O'	'W'
A07a	17	#6	10'-0"			10'-0"										
A07b	1	#6	10'-2"			10'-2"										
First and Last Bar in Vary Group Shown Only																
A11a	8	#6	10'-5"			10'-0"										
A11b	6	#6	10'-1"			10'-1"										
First and Last Bar in Vary Group Shown Only																
A13a	10	#6	9'-7"			9'-7"										
A13b	9	#6	9'-8"			9'-8"										
First and Last Bar in Vary Group Shown Only																
6A02	221	#6	9'-3"	17		3'-1"	3'-1"	3'-1"								
6A03	18	#6	8'-1 X"	3			3'-7 X"	10"	3'-7 X"				3'-2 X"		1'-9 X"	4'-4 X"
A08a	17	#10	10'-10 X"	1	1'-5"	9'-5 X"								1'-1 X"		
A08b	1	#10	11'-4"	1	1'-5"	9'-7 X"								1'-1 X"		
First and Last Bar in Vary Group Shown Only																
A14a	10	#10	10'-6"	1	1'-5"	9'-1"								1'-1 X"		
A14b	9	#10	10'-7"	1	1'-5"	9'-2"								1'-1 X"		
First and Last Bar in Vary Group Shown Only																
A16a	8	#10	10'-11"	1	1'-5"	9'-6"								1'-1 X"		
A16b	6	#10	11'-0"	1	1'-5"	9'-7 X"								1'-1 X"		
First and Last Bar in Vary Group Shown Only																
7A05	173	#7	4'-9"	1	10"	3'-11"								7"		
6A37	2	#6	6'-7 X"	3			2'-10 X"	10"	2'-10 X"				2'-6 X"		1'-4 X"	3'-7 X"
A12a	7	#6	9'-9"			9'-9"										
A12c	4	#6	9'-11"			9'-11"										
First and Last Bar in Vary Group Shown Only																
A15a	7	#10	10'-8"	1	1'-5"	9'-3"								1'-1 X"		
A15c	4	#10	10'-10 X"	1	1'-5"	9'-5 X"								1'-1 X"		
First and Last Bar in Vary Group Shown Only																
A06a	8	#6	9'-9"			9'-9"										
A06c	1	#6	10'-0"			10'-0"										
First and Last Bar in Vary Group Shown Only																
A04a	8	#10	10'-8"	1	1'-5"	9'-3 X"								1'-1 X"		
A04c	1	#10	10'-10 X"	1	1'-5"	9'-5 X"								1'-1 X"		
First and Last Bar in Vary Group Shown Only																
A09a	9	#10	11'-6"	1	1'-5"	9'-7 X"								1'-1 X"		
A09c	5	#10	11'-3"	1	1'-5"	9'-10"								1'-1 X"		
First and Last Bar in Vary Group Shown Only																

Drawing Sheet : R01 — BAR LIST

Bar Mark	Qty	Size	Total Length	Type	'A'	'B'	'C'	'D'	'E'	'F'	'G'	'H'	'J'	'K'	'O'	'W'
A10a	9	#6	10'-2"			10'-2"										
A10c	1	#6	10'-4"			10'-4"										
First and Last Bar in Vary Group Shown Only																
6A42	8	#6	9'-5"	17		3'-1"	3'-3"	3'-1"								
6A43	8	#6	9'-3 X"	17		3'-1"	3'-1 X"	3'-1"								

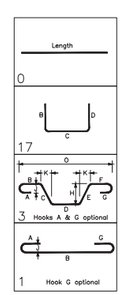

Vermont Agency of Transportation
RECEIVED
Process 0000001025 Kyle Alan Approved Accepted 5-7-2014 pdf
CK'D BY JG/JW OK'D BY JS
May 5, 2014
RESUBMIT NO Approved AsNoted
BY KH DATE 5-7-2014

LAP CHART-U.N.O.		
#11		
#10		
#9		
#8		
#7		
#6		
#5		
#4		
#3		
SIZE	TOP BARS ✱	OTHER BARS

✱ -Top bars are horiz. bars with more than 12" of concrete cast below the bars.

No.	Description	Date	By
3	CORRECTIONS/APPROVAL	5-7-14	TRH
2	CORRECTIONS/ APPROVAL	4-30-14	TRH
1	CORRECTIONS/ APPROVAL	4-8-14	TRH
0	APPROVAL	3-14-14	TRH

Revisions and Issue Record

The full intent and purpose of this drawing is the placing of reinforcing steel bars ONLY. It is NOT to be used as a means of communication between the Architect, Engineer, Contractor or any other Sub-trades.

THIS DRAWING IS NOT TO BE SCALED.

HarrisRebar Barker Steel — National Strength. Local Service.

DETAILED AT:
CANAAN
NEW HAMPSHIRE

Project: PITTSFIELD ER BRF 022
PITTSFIELD, VT

Drawing: ABUTMENT REINF

Customer: COLD RIVER BRIDGES

Engineer:

Refer to Release:

Date	Drawn	Chkd.	JOB No.	Dwg. No.
3-7-14	TRH		33505152	R01

W:\thill\Projects\33505152\Placing Drawings\DWGs\R01.dwg

ATTACHMENT 1

Summary - P-52 Swift Lift Anchor Safe Working Load Calculations
DAYTON SUPERIOR CORPORATION

Precaster: Cold River Bridges

Project: Pittsfield ER BRF 022-1 (23) P-52, 20-ton x 10" Swift-Lift Anchors IN FACE

Location: New Hampshire

Dealer: Harris Rebar
Harris Rebar.2014-0120A.3.14.14

****

Recommended P-52 Swift Lift (SL) Anchor	=	20.00	tons
Recommended length of SL Anchor	=	10.000	in. long
SL Anchor set back from face of concrete	=	0.563	inches
SL Anchor embedment depth (Le)	=	9.938	inches
SL Anchor foot diameter (Dh)	=	2.813	inches
Concrete compressive strength	=	4,000	psi at initial lift
Concrete unit weight	=	150.00	lbs. per cubic foot
SL Anchor front edge distance (T1)	=	24.000	inches
SL Anchor back edge distance (T2)	=	24.000	inches
SL Anchor left edge distance (T3)	=	24.000	inches
SL Anchor right edge distance (T4)	=	24.000	inches
Concrete ultimate pull out capacity	=	118,531	lbs. per anchor
SL Anchor ultimate mechanical capacity	=	160,000	lbs. per anchor
Recommended factor of safety	=	4.00	to 1 (Ult. to SWL)
SL Anchor tension safe working load	=	29,625	lbs. per anchor

By: Brad Phillips Date: 03/14/2014

ATTACHMENT 1

Summary - P-52 Swift Lift Anchor Safe Working Load Calculations
DAYTON SUPERIOR CORPORATION

Precaster: Cold River Bridges

Project: Pittsfield ER BRF 022-1 (23) P-52, 20-ton x 10" Swift-Lift Anchors IN EDGE

Location: New Hampshire

Dealer: Harris Rebar
Harris Rebar.2014-0120A.3.14.14

****

Recommended P-52 Swift Lift (SL) Anchor	=	20.00	tons
Recommended length of SL Anchor	=	10.000	in. long
SL Anchor set back from face of concrete	=	1.063	inches
SL Anchor embedment depth (Le)	=	10.438	inches
SL Anchor foot diameter (Dh)	=	2.813	inches
Concrete compressive strength	=	4,000	psi at initial lift
Concrete unit weight	=	150.00	lbs. per cubic foot
SL Anchor front edge distance (T1)	=	9.000	inches
SL Anchor back edge distance (T2)	=	9.000	inches
SL Anchor left edge distance (T3)	=	30.000	inches
SL Anchor right edge distance (T4)	=	39.000	inches
Concrete ultimate pull out capacity	=	62,689	lbs. per anchor
SL Anchor ultimate mechanical capacity	=	160,000	lbs. per anchor
Recommended factor of safety	=	4.00	to 1 (Ult. to SWL)
SL Anchor tension safe working load	=	15,675	lbs. per anchor

By: Brad Phillips Date: 03/14/2014

********** GROUND RELEASE II Tilt-up Analysis **********

Operator : BP
Job no.: 14120
Panel no.: WW1-TILT
Date : 3/14/2014

ATTACHMENT 1

HORIZONTAL ANALYSIS

Uniform loads

Segment Number	Length (Feet)	Load (PPF)
01	00.54	00689.14
02	02.05	01368.85
03	06.80	01368.85
04	02.33	01368.85

Section Properties

N	D(N) (Ft.)	Area (In.^2)	Mom. of In. (In^4)	Neut. Axis (In.)	+Sec. Mod. (In.^3)	-Sec. Mod. (In.^3)	Eff. Thk. (In.)
01	000.54	00661.58	000004590	004.56	00001006	00001006	009.12
02	002.05	01314.10	000035975	009.06	00003970	00003970	018.13
03	006.80	01314.10	000035975	009.06	00003970	00003970	018.13
04	002.33	01314.10	000035975	009.06	00003970	00003970	018.13

First point of zero shear = 06.04 ft.

Additional reinforcing

Angle Deg.	Loc. Feet	Flexure Stress PSI	Bending Moment Ft-Lbs	Allow. Moment Ft-Lbs	Tens. Steel Sq. In.	Comp. Steel Sq. In.	Strongbacks Sec. Mod. Wood In^3	Strongbacks Sec. Mod. Steel In^3

Maximum positive stress (Bottom)= 14 psi @ 6.0 ft. and 0°
Maximum negative stress (Top)= 11 psi @ 2.59 ft. and 0°

Balancing moment = 0.00 ft.-lbs./ft. over 0.00 ft.W-Shift 0.00
Strongback req'ments (Applicable only if printout shows add'l steel req'd.)
Wood: 0 single 2X12's or equivalent.
0 single 4X12's or equivalent.
Steel: 0 double C6X8.2 or equivalent.
0 double C8x11.5 or equivalent.

********** GROUND RELEASE II Tilt-up Analysis **********

ATTACHMENT 1

Operator : BP
Job no.: 14120
Panel no.: WW1-TILT
Date : 3/14/2014

VERTICAL ANALYSIS

Uniform loads

Segment Number	Length (Feet)	Load (PPF)
01	012.08	02596.45

Section Properties

N	D(N) (Ft.)	Area (In.^2)	Mom. of In. (In^4)	Neut. Axis (In.)	+Sec. Mod. (In.^3)	-Sec. Mod. (In.^3)	Eff. Thk. (In.)
01	012.08	02492.59	000068198	008.96	00007528	00007442	018.12

Additional reinforcing

Angle Deg.	Loc. Feet	Flexure Stress PSI	Bending Moment Ft-Lbs	Allow. Moment Ft-Lbs	Tens. Steel Sq. In.	Comp. Steel Sq. In.	Strongbacks Sec. Mod. Wood In^3	Strongbacks Sec. Mod. Steel In^3

Insert loads

Maximum tension load = 15686.91 lbs per insert.
Maximum shear load = 7843.46 lbs per insert.
Maximum ground reaction = 15686.92 lbs
Maximum positive stress (Bottom)= 76 psi @ 6.04 ft. and 0°
Maximum negative stress (Top)= 0 psi @ 0.0 ft. and 0°

Strongback req'ments (Applicable only if printout shows add'l steel req'd.)

Wood: 0 single 2X12's or equivalent.
0 single 4X12's or equivalent.
Steel: 0 double C6X8.2 or equivalent.
0 double C8x11.5 or equivalent.

ATTACHMENT 1

Insert locations - decimal

ROW	Column 1	Column 2
0	02.59,12.08	09.40,12.08

One row cable length = 20'-0"

********** GROUND RELEASE II Tilt-up Analysis **********

ATTACHMENT 1

Operator : BP
Job no.: 14120
Panel no.: WW1-TILT
Date : 3/14/2014

Insert type: Other
Safe working load = 20000 lbs.
Concrete compressive strength = 4000 psi.
Allowable bending strength = 379.4733 psi.
Steel grade = 60
Concrete unit Weight = 150 pcf.

Panel geometry

Feature number - 0 (Panel perimeter)
X(0) =00.00 Y(0) = 00.00 Width(0) =11.7292 Height(0) = 12.0833
X(1) =00.00 Y(1) = 12.0833
X(2) =11.7292 Y(2) = 12.0833
X(3) =11.7292 Y(3) = 00.00

Feature number - 1 (Arch. feature -- up Face, incremental thk. = -9 in.)
X(0) =00.00 Y(0) = 00.00 Width(1) =00.5417 Height(1) = 12.0833
X(1) =00.00 Y(1) = 12.0833
X(2) =00.5417 Y(2) = 12.0833
X(3) =00.5417 Y(3) = 00.00

Weight and C. G.

Structural thickness = 18.125 in.
Overall thickness = 18.125 in.
Projected area = 142 sq. ft.
Effective area = 138 sq. ft.
X-bar = 6.00 ft.
Y-bar = 6.04 ft.
Z-bar = 9.1696 inches
Bottom Concrete Cover for reinforcing = .75 in.
Top Concrete Cover for reinforcing = .75 in.
Weight = 31373.83 lbs.
Minimum number of inserts required by Weight = 2

P52 Swift Lift® Anchor

The P52 Swift Lift Anchor is hot forged from carbon steel. The formed head provides spherical seating that the Lifting Eye engages, while a disc-shaped foot is embedded in the concrete.

Due to its being a forged part, the Swift Lift Anchor does not depend on welds or thread engagement to develop its safe working load. Forging provides maximum safety with its advantageous material structure. This allows the anchor to easily meet the OSHA requirement of a 4 to 1 factor of safety.

In addition to the carbon steel anchors, Type 304 or 316 Stainless Steel Swift Lift Anchors are available on special order. Use stainless steel anchors when maximum protection against corrosion is required.

For safety, refer to the P52 Swift Lift Anchor Selection Chart to determine the actual safe working load of an individual anchor. The MAXIMUM safe working load is clearly visible on the head of the anchor for easy recognition of the appropriate hardware and accessories for-use with each Swift Lift Anchor.

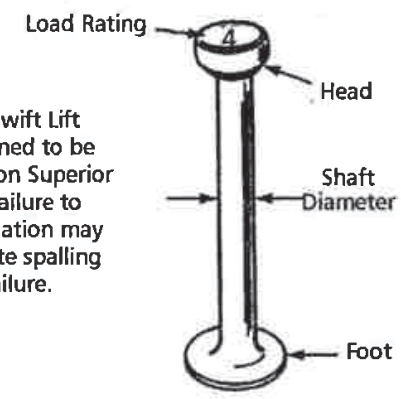

Caution: The Swift Lift Anchor is designed to be used with Dayton Superior components. Failure to use this combination may result in concrete spalling or premature failure.

To Order:
Specify: (1) quantity, (2) name, (3) system size, (4) length

Example:
200, P52 Swift Lift Anchors, 4 ton, 9-1/2" long

P52 Swift Lift Anchor and Recess Plug Dimensions

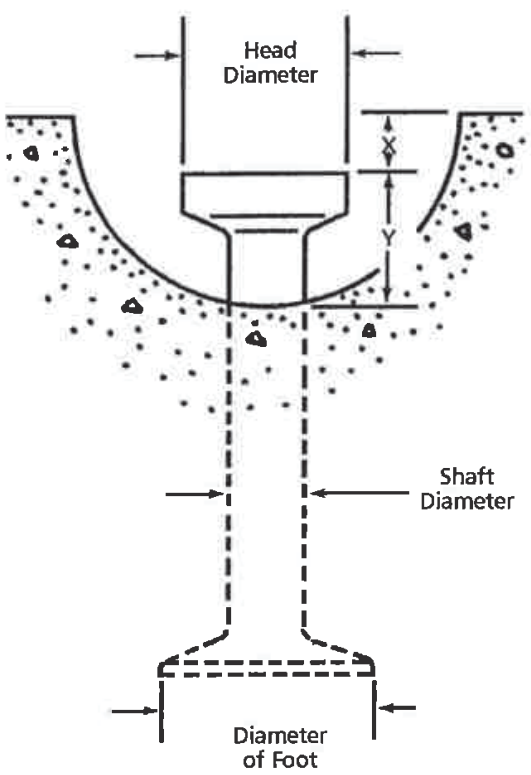

P52 Swift Lift Anchor

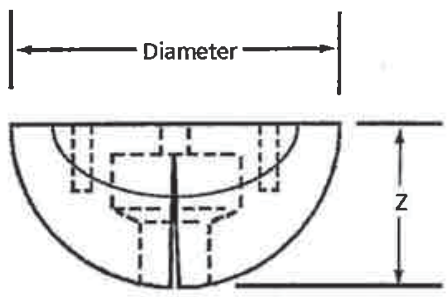

Swift Lift Round Recess Plug

Swift Lift Round Recess Plug Dimensions		
Swift Lift Anchor	Diameter of Recess Plug	Dimension Z
1	2-7/16"	1-3/16"
2	3-5/16"	1-7/16"
4	4"	1-13/16"
8	5"	2-5/16"
20 Tons	6-3/8"	3-1/8"

Note: The diameter of the narrow recess plug is the same as the diameter of the round recess plug.

P52 Swift Lift Anchor Dimensions					
Swift Lift Anchor	Dimension X	Dimension Y	Shaft Diameter	Foot Diameter	Head Diameter
1	5/16"	7/8"	3/8"	1"	11/16"
2	7/16"	1-1/16"	9/16"	1-3/8"	1-1/32"
4	9/16"	1-5/16"	3/4"	1-7/8"	1-11/32"
8	9/16"	1-5/8"	1-3/32"	2-5/8"	1-7/8"
20 Tons	9/16"	2-5/8"	1-1/2"	3-3/4"	2-3/4"

P53 Swift Lift® Eye Anchor

The Dayton Superior Swift LIft Eye Anchor (P53) is similar to the P52 anchor but has an eye at the foot to accept P60 Tension Bars. The P53 anchor is used primarily in thin sections, thin panels of lightweight concrete or shapes that must be handled at concrete compressive strengths below 2,000 psi. P53 anchors are available in 1, 2, 4, 8 and 20-ton capacities and each has its load rating embossed on the head.

To Order:
Specify: (1) quantity, (2) name, (3) system size, (4) length.

Example:
200, P53 Swift Lift Eye Anchors, 4 ton, 9-1/2" long.

P53 Swift Lift
Eye Anchor

P53 Swift Lift® Eye Anchor for Lifting and Handling

The P53 Swift Lift Eye Anchor is designed for use with the P60 Tension Bar placed through the eye of the anchor. This combination of Swift Lift Eye Anchor and P60 Tension Bar allows the anchor's full rated tensile load to be developed in thin, narrow wall applications. The anchor should be located at the center line of the wall. When two or more anchors are required, the minimum spacing between anchors must be equal to the minimum panel width.

The combination of P53 Swift Lift Eye Anchor and P60 Tension Bar is an excellent system to use for lifting, handling and setting precast columns.

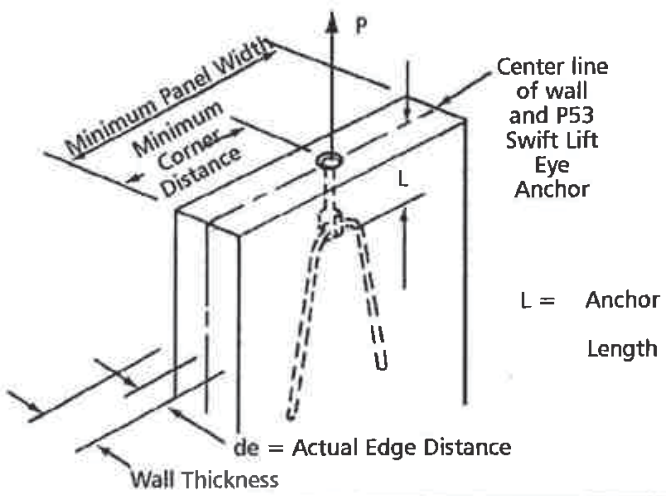

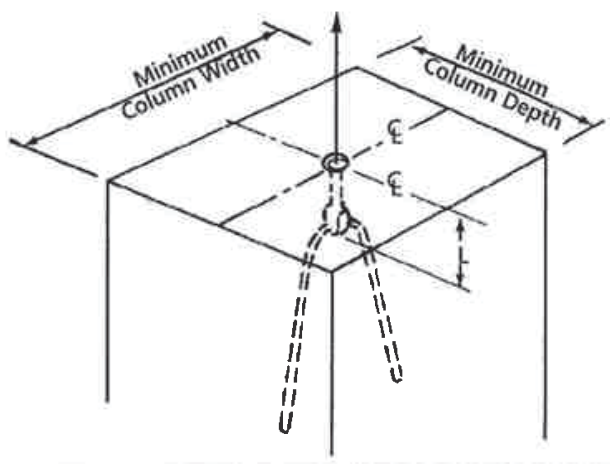

P53 Swift Lift® Eye Anchor Selection Chart

Anchor Rated Load (tons)	Anchor Length L	Minimum Thickness or Depth de	Actual Edge Distance de	Minimum Corner Distance	Minimum Panel Width	Tensile Safe Working Load per Anchor* (lbs.)
1	2-1/2"	3"	1-1/2"	8"	16"	2,000
2	3-1/2"	3"	1-1/2"	4"	8"	4,000
4	4-3/4"	3-3/4"	1-7/8"	5"	10"	8,000
8	7-1/16"	4-3/4"	2-3/8"	7"	14"	16,000
20	9-7/8"	6-3/8"	3-3/16"	8-1/2"	17"	40,000

* Safe Working Load provides a factor of safety of approximately 4 to 1 in 2,000 psi normal weight concrete. The P53 Eye Anchor must be used in conjunction with the P60 Tension Bar in order to develop its published rated working loads.

Note: Contact Dayton Superior Technical Service Department for safe working loads when the P53 Eye Anchor is used with straight lengths of rebar.

P60 Swift Lift® Tension Bar

The Dayton Superior Swift Lift Tension Bar (P60) is designed to be used with the P53 Eye Anchor in order for the eye anchor to develop its published rated working loads. See P60 sizes and dimensions below.

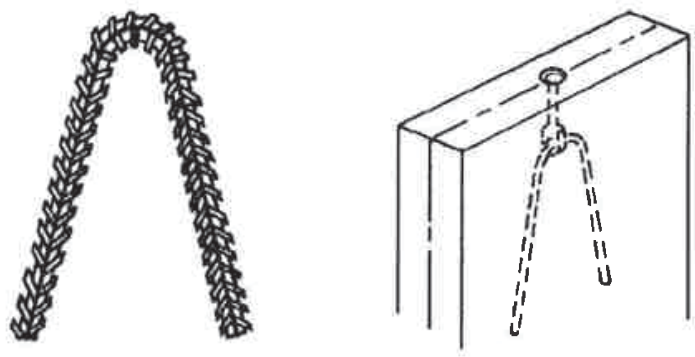

P60 Swift Lift Tension Bar

To Order:
Specify: (1) quantity, (2) name, (3) anchor size.

Example:
200, P60 Swift Lift Tension Bar, 10-ton anchor.

P60 Swift Lift Tension Bar Dimensions					
Anchor Rated Load (Tons)	Grade 60 Rebar Size	Rebar Overall Length	A		R
			Standard	Maximum	
1	.306" Wire	40"	1 4 "	—	3/4"
2	#3	24"	5 "	7 -1 /2 "	1-1/8"
4	#5	24"	6 -1 /4 "	1 0 "	1-7/8"
8	#6	48"	9 -1 /2 "	1 5 "	2-1/4"
20	#9	156"	1 2 -1 /2 "	2 0 "	3"

Note: Wire style is for use with 1 ton P53 Eye Anchors only.

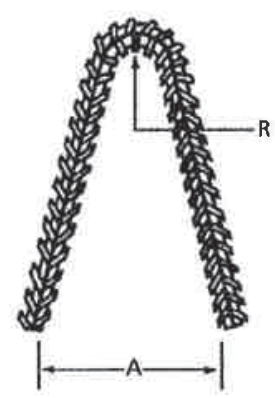

P60 Rebar Style

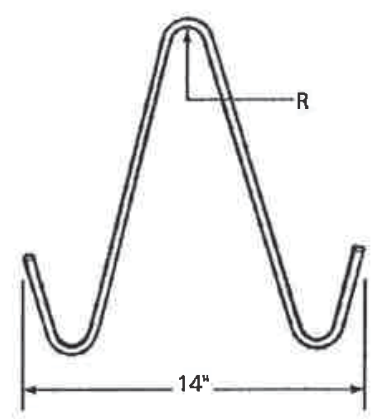

P60 Wire Style

P60 Swift Lift® Tension Bar Installation

The proper installation of a tension bar is as follows:

1. Place the tension bar through the eye of the anchor in such a manner that the tension bar contacts the bottom of the eye.
2. Make certain the legs of the tension bar are equal on either side of the anchor.
3. Wire the tension bar into position so that the tension bar stays in contact with the bottom of the eye. (See sketch below.)

DO NOT attempt to use field-bent bars as a replacement for the Dayton Superior P60 Tension Bar. Field bending may result in an improperly shaped tension bar, an incorrect radius and/or a cracked bar. A problem such as this can cause the field-bent tension bar to fail prematurely.

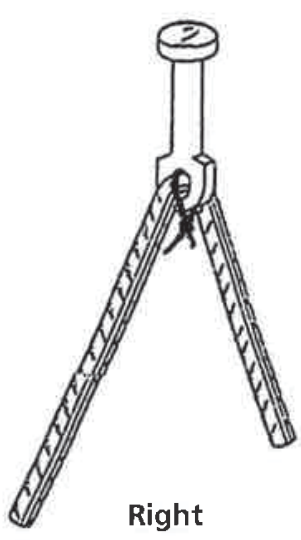

Right

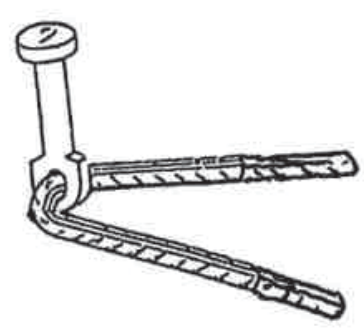

Wrong

How to Install P56 and P56PL Recess Plugs on P52 Anchors

Grasp the recess plug firmly across the top diameter of the plug. Application of pressure by the thumb and fingers on the outer edge of the plug will cause the plug to open up to allow insertion of the anchor.

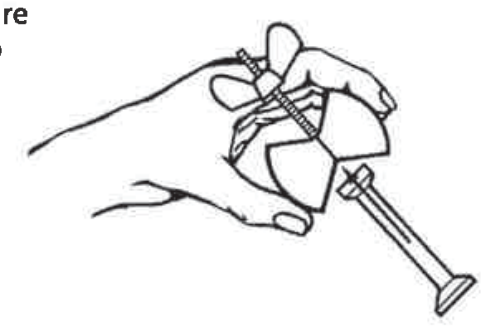

"Wet Setting" P52 Swift Lift Face Lift Anchors

When a Swift Lift anchor is to be positioned in the top surface of a flat precast section, wet setting the anchor is best done immediately after the concrete has been placed.

The anchor/recess plug assembly is attached to a small template board and pressed into the fresh concrete until the template board lies flush on the surface of the concrete.

Light vibration of the fresh concrete will assure proper embedment and anchorage.

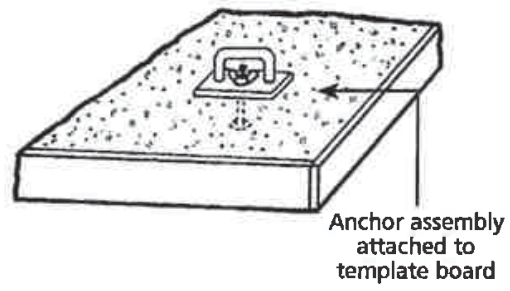

Recess Plug Removal

Swift Lift recess plugs provide two holes in the top surface that are used in the removal process. Insert two screw drivers or steel rods into the holes and simply lever the two across the plug for easy removal.

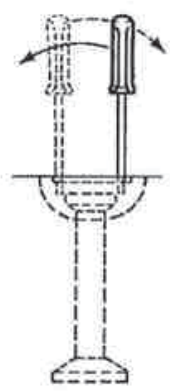

Selecting the Proper Swift Lift Anchor

Determination of the required rated load and length of a P52 Swift Lift Anchor is based on the actual maximum load that is transferred to the anchor. In most cases, a flat slab can be handled with the anchors properly located in the face of the flat slab. The anchors should normally be the maximum length that can be accommodated in the slab's structural thickness, allowing at least 1/2" clearance between the anchor and the casting bed. Dimension tables and safe working load charts, contained herein, will aid in the selection of the proper anchor. Keep in mind that the safe working load of an anchor is a function of several factors:

1. The effective concrete thickness
2. Actual edge distance
3. Concrete compressive strength at time of lift
4. Anchor length
5. In some applications, the use of a shear bar

DAYTON® SUPERIOR

P61 Swift Lift® Setting Plate, P62 Countersunk Screw

The Dayton Superior P61 Swift Lift Setting Plate and P62 Countersunk Screw combination provide an easy method of placing a Swift Lift Anchor into the surface of a flat panel without obstructing the screeding process. The P61 setting plate is available in two sizes, a 4" unit for use with 4-ton anchors and a 5" unit for use with 8-ton anchors. The P62 screw is available in two sizes to match the setting plates. The 4-ton setup uses a 3/4" long, 5/16" – 18 NC thread screw and the 8-ton setup uses a 3/4" long, 7/16" – 14 NC thread screw.

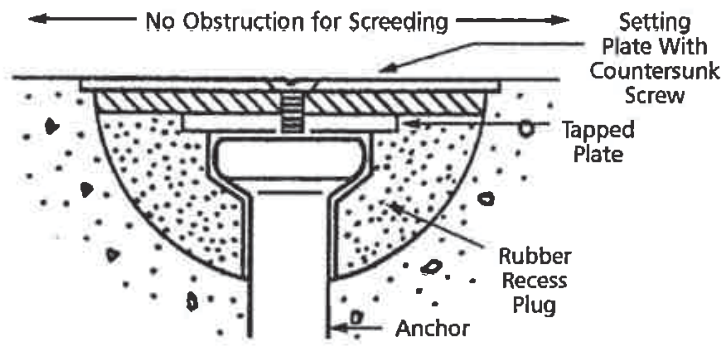

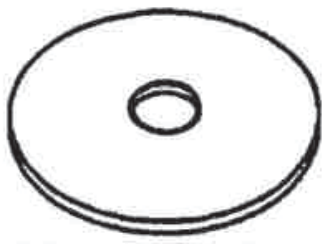

P61 Swift Lift Setting Plate

P62 Swift Lift Countersunk Screw

To Order:
Specify: (1) quantity, (2) name, (3) anchor size.

Example:
200, P61 Swift Lift Setting Plates and 200, P62 Countersunk Screws for 4-ton anchors.

P63 Swift Lift® Stud, P64 Swift Lift Wing Nut

The Dayton Superior P63 Swift Lift Stud and P64 Wing Nut combination is used to set P56 Narrow Recess Plugs. Available in two sizes, 5/16" – 18 NC threads for use with the 1-ton anchor and 7/16" – 14 NC threads for use with 2, 4, 8 and 20-ton P56 anchors.

P63 Swift Lift Stud

Note: The P63 Stud and P64 Wing Nut are not interchangeable with the P56PL Recess Plug accessories.

P64 Swift Lift Wing Nut

To Order:
Specify: (1) quantity, (2) name, (3) size.

Example:
200, P63 Swift Lift Studs and 200 P64 Swift Lift Wing Nuts, 7/16" dia.

P63PL Swift Lift® Plus Holding Stud, P64PL Swift Lift Plus Wing Nut

The Dayton Superior P63PL Swift Lift Plus Holding Stud is a 3/8" diameter, coil threaded stud with a fixed wing nut and a free-running wing nut used with the P66PL threaded plate to quickly attach the P56PL recess plug to the formwork. The holding stud is inserted through the form and threaded into the threaded plate. Complete the anchor installation by screwing the free-running wing nut tightly against the form.

The P64PL Wing Nut has 3/8" diameter coil thread and is available as a replacement nut for the P63PL Holding Stud.

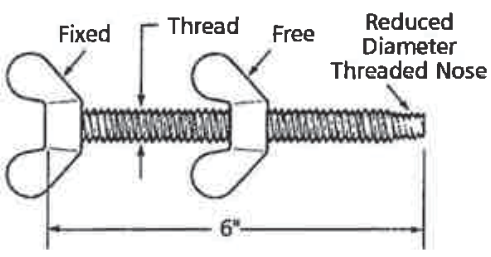

P63PL Swift Lift Plus Holding Stud

P64PL Swift Lift Plus Wing Nut

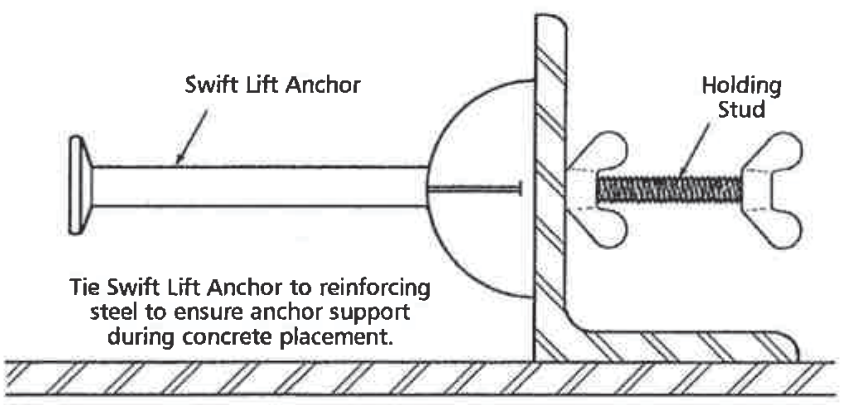

To Order:
Specify: (1) quantity, (2) name.

Example:
200, P63PL Swift Lift Plus Holding Studs.

Swift Lift® System

The Swift Lift System is a quick connect-disconnect system that allows precast concrete elements to be handled repeatedly, with speed, safety and economy. It is a non-welded system and void of threaded connections. The quality, reusable Swift Lift Lifting Eye's heavy duty construction will provide years of good service.

The Swift Lift System is available with safe load ratings of 1, 2, 4, 8 and 20 tons. Each component is clearly marked with its maximum safe working load. The System is extremely versatile and can be utilized for vertical and diagonal pulls. It can be used to lift concrete elements from a horizontal to a vertical position without the aid of a tilting table.

P50 Swift Lift® Universal Lifting Eye

The Swift Lift Universal Lifting Eye (P50) consists of a flat-sided, spherical lifting body and a high strength bail. The lifting body has a T-shaped slot that permits rapid attachment and release of the head on Swift Lift Anchors.

The design of the P50 Universal Lifting Eye permits the bail to freely rotate 180°, while the complete lifting eye may rotate through a 360° arc. This design feature allows precast concrete elements to be turned, tilted and/or rotated under load.

Dayton Superior does not recommend the use of this lifting eye for edge lifting of thin precast concrete panels.

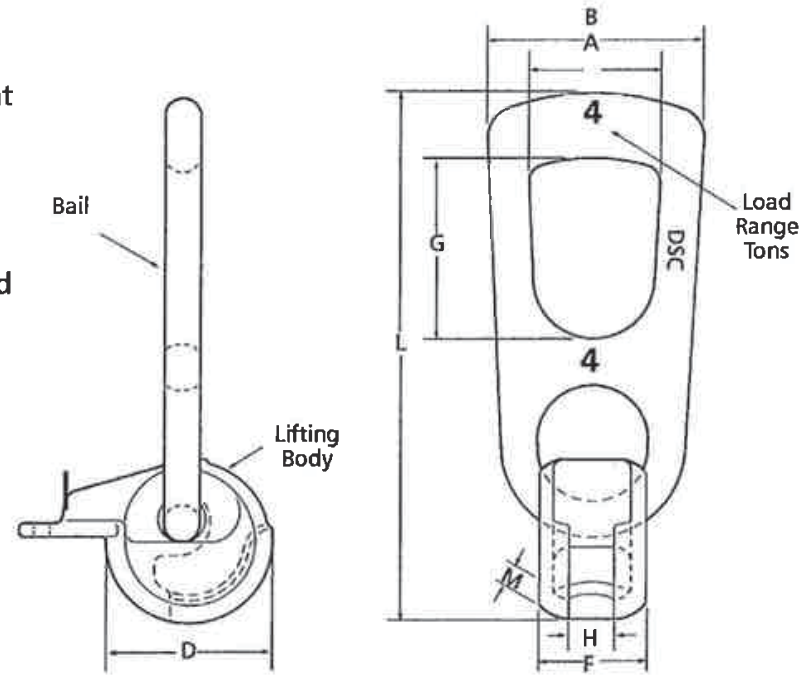

P50 Swift Lift Universal Lifting Eye Dimensions						
Rated Load Tons	A	B	D	F	G	L
1	1.87"	2.95"	2.20"	1.26"	2.80"	7.40"
2	2.34"	3.58"	2.68"	1.61"	3.41"	9.06"
4	2.76"	4.65"	3.46"	2.22"	3.46"	11.14"
8	3.47"	6.30"	4.41"	2.83"	4.52"	15.79"
20	4.18"	7.09"	6.00"	4.29"	5.31"	20.00"

The rated load provides a factor of safety of approximately 5 to 1 (ultimate to rated load).

P50 Inspection and Maintenance

The P50 Universal Lifting Eye may be subjected to wear, misuse, overloading and other factors that can affect the lifting eye's rated load. Therefore, it is imperative that the lifting eye be user-inspected at least once a month to determine its general condition and degree of wear.

During the user's monthly inspection, the lifting eye should be checked for evidence of heat application. If evidence of heat application is found, the unit must be scrapped. Check for a bent or twisted bail and discard all units found to have these flaws. Also, check to make certain that the bail rotates freely in all directions.

Limiting Dimensions on P-50 Swift Lift Universal Lifting Eye		
Rated Load (Tons)	H Maximum Width	M Minimum Thickness
1	0.512"	0.217"
2	0.709"	0.236"
4	0.984"	0.315"
8	1.260"	0.472"
20	1.811"	0.709"

At least once every three months, dimensions "H" and "M" on each unit should be checked. The upper limits are shown in the chart. If either of these limits is exceeded, the P50 Universal Lifting Eye must be removed from service and destroyed.

The proper method for scrapping a lifting eye is to cut through the bail with a cutting torch to render the unit useless as a lifting device.

No repairs or welding to the P50 Swift Lift Universal Lifting Eye are permitted.

How to Use the P50 Swift Lift Universal Lifting Eye

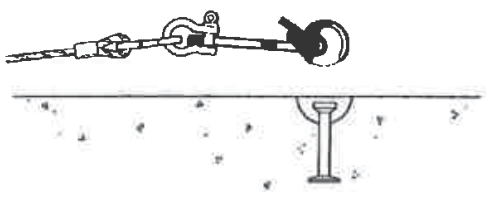

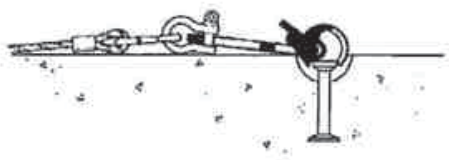

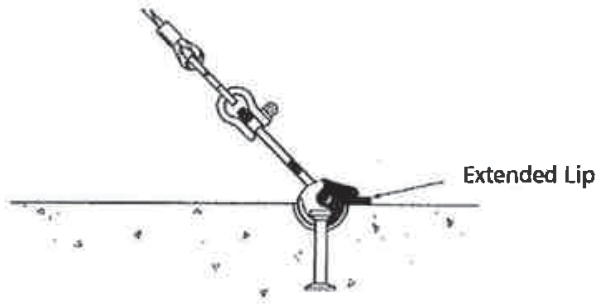

1. To install the P50 lifting eye, hold the unit upside down with the T-shaped slot directly over the head of the Swift Lift anchor.
2. Lower the lifting eye down onto the anchor until the Tslot engages the head of the anchor.
3. Rotate the lifting eye until the extended lip of the body touches the horizontal surface of the concrete.

Note: Prior to lifting a precast element, apply an initial cable tension to make sure that the bail and body of the lifting eye are aligned in the direction of the cable pull.

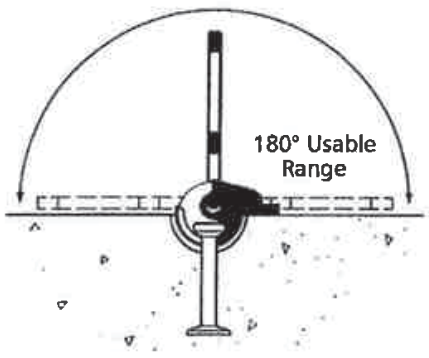

The bail of the P50 lifting eye can move through a 180° usable range.

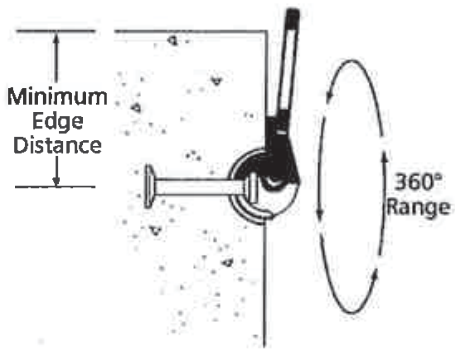

The main body of the lifting eye has a 360° rotational range.

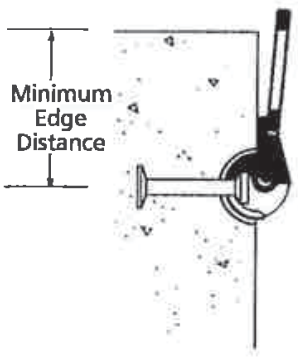

The P50 lifting is used with the T-shaped slot facing toward the direction of the applied load.

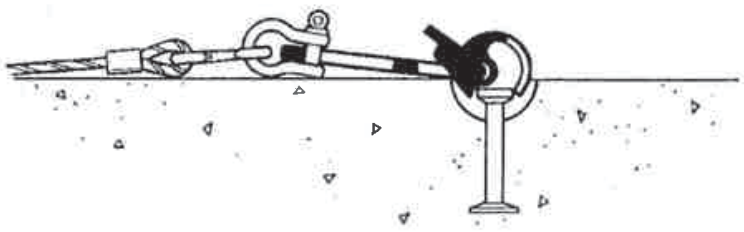

To disengage the lifting eye, the crane hook is lowered and the body removed by rotating the extended lip upward.

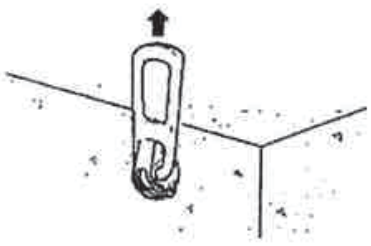

Right

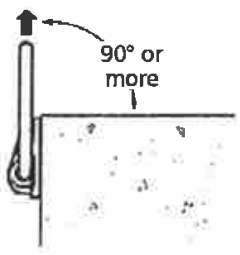

Right

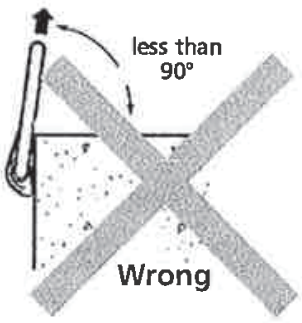

Wrong

Dos and Don'ts of the P50 Swift Lift Universal Lifting Eye

Prior to lifting a precast element, apply an initial cable tension to make certain that the bail and body of the lifting eye are aligned in the direction of the cable pull.

When applying the initial cable tension on edge lift applications, make sure that the cables are at a 90° angle (or larger) to the surface of the precast element.

Warning: Do not allow the crane lines to form an angle less than 90° during an edge lift application. This condition can bend the lifting eye bail and could lead to a premature failure.

Warning: The crane line and bail of the lifting hardware must be turned in the direction of the cable forces before the lifting operation begins. The crane line must not be allowed to apply a sideward force on the bail. This condition is dangerous and could lead to premature failure of the hardware or insert.

Warning: Do not modify, weld or alter in any way the Swift Lift Universal Lifting Eye.