STATE OF VERMONT
AGENCY OF TRANSPORTATION

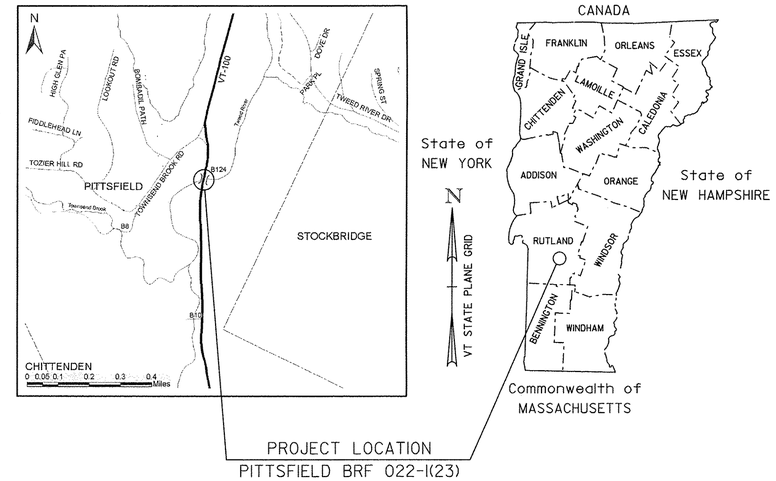

PROPOSED IMPROVEMENT
BRIDGE PROJECT

TOWN OF PITTSFIELD, RUTLAND COUNTY

VT ROUTE 100, (MINOR ARTERIAL), BRIDGE 124

PROJECT LOCATION : BRIDGE IS LOCATED 3.5 MILES SOUTH OF JUNCTION VT 107 AND VT 100.

PROJECT DESCRIPTION : REPLACEMENT OF BRIDGE 124 WITH A NEW CONCRETE STRUCTURE ON NEW ABUTMENTS, INCLUDING RELATED APPROACH AND CHANNEL WORK.

LENGTH OF STRUCTURE :	80.84 FEET
LENGTH OF ROADWAY :	269.16 FEET
LENGTH OF PROJECT :	350.00 FEET

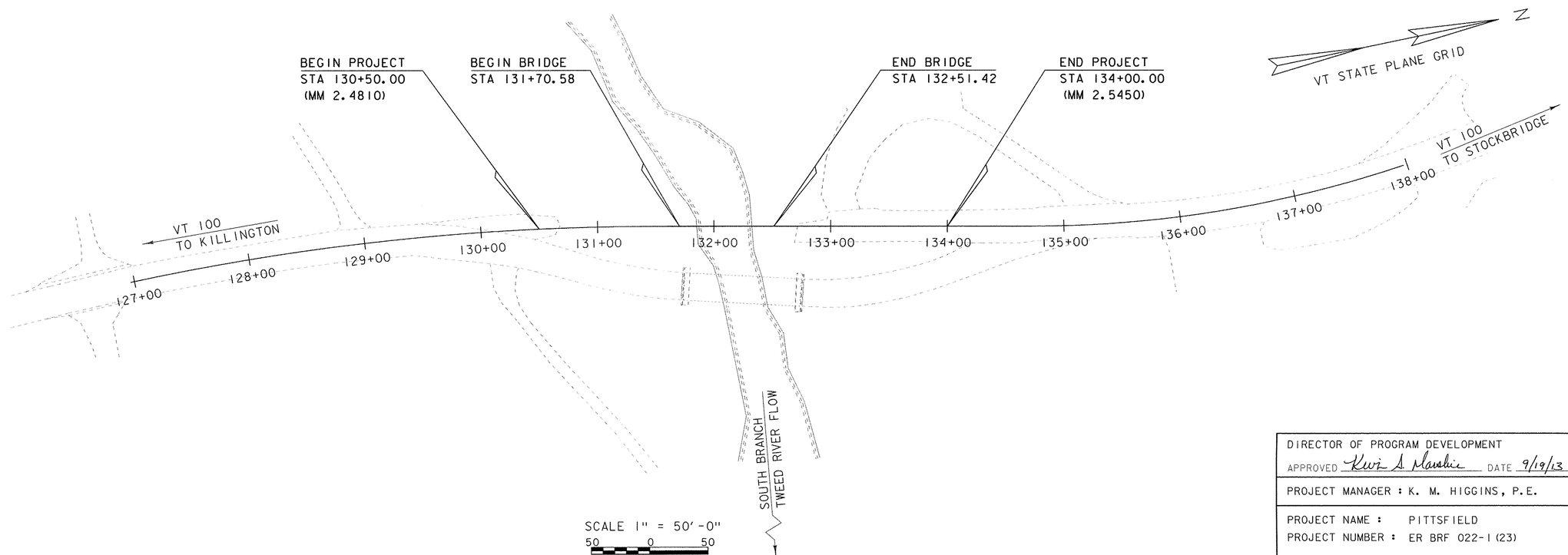

THESE PLANS ARE SUBJECT TO SUCH ENGINEERING CHANGES AS MAY BE REQUIRED BY THE FEDERAL HIGHWAY ADMINISTRATION OR THE DIRECTOR OF PROGRAM DEVELOPMENT.

CONSTRUCTION IS TO BE CARRIED ON IN ACCORDANCE WITH THESE PLANS AND THE STANDARD SPECIFICATIONS FOR CONSTRUCTION DATED 2011, AS APPROVED BY THE FEDERAL HIGHWAY ADMINISTRATION ON JULY 20, 2011 FOR USE ON THIS PROJECT, INCLUDING ALL SUBSEQUENT REVISIONS AND SUCH REVISED SPECIFICATIONS AND SPECIAL PROVISIONS AS ARE INCORPORATED IN THESE PLANS.

QUALITY ASSURANCE PROGRAM : LEVEL 2

SURVEYED BY : VTRANS
SURVEYED DATE : 5/2012

DATUM
VERTICAL NAVD 88
HORIZONTAL NAD 83 (07)

DIRECTOR OF PROGRAM DEVELOPMENT
APPROVED Kevin S. Marshia DATE 9/19/13

PROJECT MANAGER : K. M. HIGGINS, P.E.

PROJECT NAME : PITTSFIELD
PROJECT NUMBER : ER BRF 022-1 (23)

SHEET 1 OF 67 SHEETS

STATE OF VERMONT
AGENCY OF TRANSPORTATION

PRELIMINARY INFORMATION SHEET (BRIDGE)

Version 11.06.15

LRFD

INDEX OF SHEETS

PLAN SHEETS

1	TITLE SHEET
2	PRELIMINARY INFORMATION SHEET
3	GENERAL NOTES
4 - 5	QUANTITY SHEETS
6 - 7	TYPICAL SECTIONS
8	LEGEND SHEET
9	TIE SHEET
10 - 12	LAYOUT SHEETS
13 - 14	MAINLINE PROFILE 1-2
15	UTILITY RELOCATION PLAN
16 - 18	SIGN & LINE STRIPING SHEETS
19	RAIL LAYOUT
20	BORING LAYOUT SHEET
21 - 23	BORING LOGS
24	DECK PLAN
25 - 26	NEXT BEAM DETAILS
27	BEARING DETAILS
28	APPROACH SLAB DETAILS
29	ABUTMENT TYPICALS
30	ABUTMENT 1
31	ABUTMENT 1 REINFORCING
32	ABUTMENT 2
33	WING WALL DETAILS
34	DECK CLOSURE POUR
35	EPSC PLAN NARRATIVE
36 - 38	EPSC- EXISTING CONDITION SHEETS
39 - 41	EPSC- DURING CONSTRUCTION SHEETS
42 - 44	EPSC- FINAL CONDITIONS SHEETS
45	EPSC DETAILS
46 - 47	BANKING / MATERIAL TRANSITION SHEETS
48 - 59	MAINLINE CROSS SECTIONS
60 - 63	CHANNEL CROSS SECTIONS
64	ROW DETAIL SHEET
65 - 67	ROW LAYOUT SHEETS

STANDARDS LIST

E-134	BRIDGE NUMBER PLAQUE	08-08-1995
E-193	PAVEMENT MARKING DETAILS	08-18-1995
G-1B	BOX BEAM GUARD RAIL	06-01-1994
G-4	PLANK RAIL, GUIDE POSTS, MARKER POSTS	06-01-1994
S-364A	BRIDGE RAILING, GALVANIZED 3 RAIL BOX BEAM	04-23-2012
S-364B	GUARDRAIL APPROACH SECTION, GALVANIZED 3 RAIL BOX BEAM	04-23-2012
S-364C	GUARDRAIL APPROACH SECTION, GALVANIZED 3 RAIL BOX BEAM	04-23-2012
S-364D	GUARDRAIL APPROACH SECTION, GALVANIZED 3 RAIL BOX BEAM	04-23-2012
T-1	TRAFFIC CONTROL GENERAL NOTES	08-06-2012
T-10	CONVENTIONAL ROADS CONSTRUCTION APPROACH SIGNING	08-06-2012
T-28	CONSTRUCTION SIGN DETAILS	08-06-2012
T-35	CONSTRUCTION ZONE LONGITUDNAL DROP-OFFS	08-06-2012
T-45	SQUARE TUBE SIGN POST AND ANCHOR	01-02-2013

STRUCTURES DETAILS

SD-501.00	CONCRETE DETAILS AND NOTES	04-07-2010
SD-502.00	CONCRETE DETAILS AND NOTES	05-04-2010
SD-516.10	BRIDGE JOINT ASPHALTIC PLUG	04-07-2010

AS BUILT "REBAR" DETAIL

LEVEL I	LEVEL II	LEVEL III
TYPE:	TYPE:	TYPE:
GRADE:	GRADE:	GRADE:

TRAFFIC DATA

YEAR	ADT	DHV	% D	% T	ADTT
2015	3700	420	57	8.7	420
2035	4100	460	57	12.6	680

20 year ESAL for flexible pavement from 2015 to 2035 : 3165000
40 year ESAL for flexible pavement from 2015 to 2055 : 7286000
Design Speed : 50 mph

FINAL HYDRAULIC REPORT

HYDROLOGIC DATA

Date: July 2013

DRAINAGE AREA : 20.2 sq. mi.
CHARACTER OF TERRAIN : Hilly to mountainous, mostly forested
STREAM CHARACTERISTICS : Sinuous, alluvial
NATURE OF STREAMBED : Gravel ,cobbles and boulders

PEAK FLOW DATA

Q 2.33 =	1,500 cfs	Q 50 =	5,800 cfs
Q 10 =	3,550 cfs	Q 100 =	6,900 cfs
Q 25 =	4,800 cfs	Q 500 =	10,150 cfs

DATE OF FLOOD OF RECORD: Unknown
ESTIMATED DISCHARGE: Unknown
WATER SURFACE ELEV.: Unknown
NATURAL STREAM VELOCITY : @ Q50 = 10.6 fps
ICE CONDITIONS : Moderate
DEBRIS: Moderate
DOES THE STREAM REACH MAXIMUM HIGHWATER ELEV. RAPIDLY? No
IS ORDINARY RISE RAPID? Yes
IS STAGE AFFECTED BY UPSTREAM OR DOWNSTREAM CONDITIONS? No
IF YES, DESCRIBE:

WATERSHED STORAGE: < 1%
HEADWATERS:
UNIFORM: X
IMMEDIATELY ABOVE SITE:

EXISTING STRUCTURE INFORMATION

STRUCTURE TYPE: Single span T-beam and I-beam bridge
YEAR BUILT: Built in 1929, widened in 1963
CLEAR SPAN(NORMAL TO STREAM): 47'
VERTICAL CLEARANCE ABOVE STREAMBED: 9'
WATERWAY OF FULL OPENING: 420 sq. ft.
DISPOSITION OF STRUCTURE: Damaged in 2011 flood and has been removed
TYPE OF MATERIAL UNDER SUBSTRUCTURE: See boring logs

WATER SURFACE ELEVATIONS AT:

Q2.33 =	885.4'	VELOCITY =	6.2 fps
Q10 =	890.0'	"	10.3 fps
Q25 =	891.9'	"	11.0 fps
Q50 =	892.7'	"	10.8 fps
Q100 =	892.9'	"	12.2 fps

LONG TERM STREAMBED CHANGES: Some local scour along the downstream end of the northern abutment.

IS THE ROADWAY OVERTOPPED BELOW Q100: Yes
FREQUENCY: Slightly below Q25
RELIEF ELEVATION: 891.3'
DISCHARGE OVER ROAD @Q100: 1,160 cfs

UPSTREAM STRUCTURE

TOWN: Pittsfield
DISTANCE: 3,000'
HIGHWAY # : TH 20
STRUCTURE #: 10
CLEAR SPAN: 25'
CLEAR HEIGHT: 7'
YEAR BUILT: 1996
FULL WATERWAY:
STRUCTURE TYPE: Steal beam bridge

DOWNSTREAM STRUCTURE

TOWN: Pittsfield
DISTANCE: 4,000'
HIGHWAY # : TH 15
STRUCTURE #: 11
CLEAR SPAN: 51'
CLEAR HEIGHT: 10'
YEAR BUILT: 1974
FULL WATERWAY: 370 sq. ft.
STRUCTURE TYPE: Steal beam bridge

LRFR LOAD RATING FACTORS

LOADING LEVELS	TRUCK						
	H-20	HL-93	3S2	6 AXLE	3A STR.	4A STR.	5A SEMI
TONNAGE	20	36	36	66	30	34.5	38
INVENTORY	2.12	1.03					
POSTING							
OPERATING	2.85	1.39	2.23	1.48	2	1.79	1.91
COMMENTS:							

PILE DRIVING AND TESTING REQUIREMENTS

1. NOMINAL PILE DRIVING CAPACITY — Rndr: 385.00 KIP
2. PILE TEST RESISTANCE FACTOR — ϕ: 0.65
3. MAXIMUM PILE TIP ELEVATION — SEE GEN NOTES
4. 0

PROPOSED STRUCTURE

STRUCTURE TYPE: Single span precast concrete NEXT Beam bridge

CLEAR SPAN(NORMAL TO STREAM): 64'
VERTICAL CLEARANCE ABOVE STREAMBED: 9'
WATERWAY OF FULL OPENING: 520 sq. ft.

WATER SURFACE ELEVATIONS AT:

Q2.33 =	885.2'	VELOCITY=	5.4 fps
Q10 =	888.2'	"	8.7 fps
Q25 =	890.8'	"	10.1 fps
Q50 =	892.0'	"	10.9 fps
Q100 =	892.8'	"	10.9 fps

IS THE ROADWAY OVERTOPPED BELOW Q100: Yes
FREQUENCY: Just above Q25
RELIEF ELEVATION: 891.3'
DISCHARGE OVER ROAD @Q100: 960 cfs

AVERAGE LOW ELEVATION OF SUPERSTRUCTURE: 888.5'
VERTICAL CLEARANCE: @ Q50 = -3.5' (Water is onto the beams at about Q10)

SCOUR: Long term degradation and contraction scour = 3' up to Q100 and Q500.

REQUIRED CHANNEL PROTECTION: Stone Fill, Type IV

PERMIT INFORMATION

AVERAGE DAILY FLOW:	40 cfs	DEPTH OR ELEVATION:
ORDINARY LOW WATER:	20 cfs	Elev. 879.0' through bridge area
ORDINARY HIGH WATER:	650 cfs	Elev. 882.5' through bridge area

TEMPORARY BRIDGE REQUIREMENTS

STRUCTURE TYPE: Temporary bridge is already in place
CLEAR SPAN (NORMAL TO STREAM):
VERTICAL CLEARANCE ABOVE STREAMBED:
WATERWAY AREA OF FULL OPENING:

ADDITIONAL INFORMATION

The existing bridge was damaged in the 2011 flood and has been removed. There is presently a temporary bridge in place.

TRAFFIC MAINTENANCE NOTES

1. MAINTAIN TWO-WAY TRAFFIC ON A TEMPORARY BRIDGE.
2. TRAFFIC SIGNALS ARE NOT NECESSARY.
3. SIDEWALKS ARE NOT NECESSARY
4. THE APPROACHES FOR THE TEMPORARY BRIDGE SHALL NOT BE PAVED.

DESIGN VALUES

1. DESIGN LIVE LOAD		HL-93
2. FUTURE PAVEMENT	d_p:	0.0 INCH
3. DESIGN SPAN	L:	78.00 FT
4. MIN. MID-SPAN POS. CAMBER @ RELEASE (PRESTRESSED UNITS)	Δ:	2.00 INCH
5. PRESTRESSING STRAND (0.60 INCH DIAMETER - LOW RELAX)	f_y:	270 KSI
6. PRESTRESSED CONCRETE STRENGTH	f'_c:	10.0 KSI
7. PRESTRESSED CONCRETE RELEASE STRENGTH	f'_{ci}:	8.0 KSI
8. CONCRETE, HIGH PERFORMANCE CLASS AA	f'_c:	- - -
9. CONCRETE, HIGH PERFORMANCE CLASS A	f'_c:	- - -
10. CONCRETE, HIGH PERFORMANCE CLASS B	f'_c:	- - -
11. CONCRETE, CLASS C	f'_c:	- - -
12. REINFORCING STEEL	f_y:	60 KSI
13. STRUCTURAL STEEL AASHTO M270	f_y:	- - -
14. SOIL UNIT WEIGHT	γ:	0.140 KCF
15. NOMINAL BEARING RESISTANCE OF SOIL	q_n:	4.0 KSF
16. SOIL BEARING RESISTANCE FACTOR (REFER TO AASHTO LRFD)	ϕ:	- - -
17. NOMINAL BEARING RESISTANCE OF ROCK	q_n:	10.0 KSF
18. ROCK BEARING RESISTANCE FACTOR (REFER TO AASHTO LRFD)	ϕ:	- - -
19. NOMINAL AXIAL PILE RESISTANCE	q_p:	385.0 KIPS
20. PILE YIELD STRENGTH ASTM A572	f_y:	50 KSI
21. PILE SIZE		HP 12X 84
22. EST. PILE LENGTH	L_p:	87 FT
23. PILE RESISTANCE FACTOR	ϕ:	0.65
24. LATERAL PILE DEFLECTION	Δ:	- - -
25. BASIC WIND SPEED	V_{3s}:	- - -
26. MINIMUM GROUND SNOW LOAD	p_g:	- - -
27. SEISMIC DATA — PGA : - - -	S_s:	- - -
	S_1:	- - -

PROJECT NAME: **PITTSFIELD**
PROJECT NUMBER: **ER BRF 022-1(23)**

FILE NAME:	s86e060excel.dgn	PLOT DATE:	9/18/2013
PROJECT LEADER:	K. HIGGINS	DRAWN BY:	J. GRIGAS
DESIGNED BY:	J. GRIGAS	CHECKED BY:	J. SALVATORI
PRELIMINARY INFORMATION SHEET		SHEET	2 OF 67

GENERAL

1. ALL MATERIALS AND CONSTRUCTION SHALL CONFORM TO THE VERMONT AGENCY OF TRANSPORTATION 2011 STANDARD SPECIFICATIONS FOR CONSTRUCTION, THE 2012 AASHTO LRFD BRIDGE DESIGN SPECIFICATIONS, AND THEIR LATEST REVISIONS.

2. ALL PRECAST CONCRETE ELEMENTS TO BE FABRICATED TO THE SPECIFIED DIMENSIONS WITHIN THE TOLERANCES DICTATED IN THE PRECAST/PRESTRESSED CONCRETE INSTITUTE TOLERANCE MANUAL FOR PRECAST AND PRESTRESSED CONCRETE CONSTRUCTION, MNL 135-00, AND ITS LATEST REVISIONS.

3. ALL DIMENSIONS ARE HORIZONTAL OR VERTICAL, AND ARE GIVEN AT 68 DEGREES FAHRENHEIT, UNLESS NOTED OTHERWISE.

4. NO ADJUSTMENTS TO THE BITUMINOUS WEARING SURFACE ON THE BRIDGE SHALL BE MADE TO ACCOUNT FOR THE DIFFERENCE BETWEEN BEAM CAMBER AND THE THEORETICAL ROADWAY PROFILE. THE WEARING SURFACE SHALL BE SHIMMED TRANSVERSELY AS NECESSARY TO ACCOUNT FOR POTENTIAL DIFFERENTIAL CAMBER OF THE ADJACENT BEAMS.

5. THE "STONE FILL, TYPE IV" UNDER THE BRIDGE AS SHOWN IN THE PLANS SHALL BE PLACED BEFORE THE NEW BEAMS ARE SET.

TRAFFIC CONTROL

6. THE CONTRACTOR SHALL BE RESPONSIBLE FOR THE DESIGN AND IMPLEMENTATION OF A SITE SPECIFIC TRAFFIC CONTROL PLAN FOR ALL STAGES OF CONSTRUCTION. THE PLAN SHALL CLEARLY DETAIL HOW TRAFFIC WILL BE MAINTAINED. THE PLAN SHALL SPECIFY ALL CONSTRUCTION ACTIVITES REQUIRING ALTERNATING ONE WAY TRAFFIC RELATE THOSE ACTIVITIES TO THE CONSTRUCTION SCHEDULE AND SHOW APPROPRIATE TEMPORARY TRAFFIC CONTROL. THE CONTRACTOR SHALL SUBMIT DETAILED TRAFFIC CONTROL PLANS TO THE ENGINEER FOR APPROVAL PER SUBSECTION 105.03. ALL COSTS SHALL BE INCLUDED IN ITEM 900.645 SPECIAL PROVISION (TRAFFIC CONTROL, ALL-INCLUSIVE). SEE SPECIAL PROVISIONS.

7. INSTALLATION OF TEMPRORARY TRAFFIC CONTROL SIGNS SHALL NOT BLOCK ANY EXISTING TRAFFIC CONTROL SIGN ASSEMBLIES. THE CONTRATOR SHALL TRY TO MAINTAIN AT LEAST 200 FEET BETWEEN SIGN ASSEMBLIES.

CONCRETE

8. WATER REPELLENT, SILANE SHALL BE FURNISHED IN ACCORDANCE WITH SECTION 514. SILANE SHALL BE SHOP APPLIED TO ALL EXPOSED CONCRETE ON THE BRIDGE SUPERSTRUCTURE AND SUBSTRUCTURE, WITH THE EXCEPTION OF THE BOTTOM OF THE PRECAST NEXT BEAMS BETWEEN THE DRIP NOTCHES. PAYMENT FOR SILANE WILL BE INCLUDED IN THE UNIT PRICE BID FOR THE APPROPRIATE PRECAST ITEM.

9. ALL CONCRETE PLACED INTEGRALLY WITH THE SUPERSTRUCTURE SHALL BE ITEM 900.608, "SPECIAL PROVISION (HIGH PERFORMANCE CONCRETE, RAPID SET)".

10. ALL PRECAST SUBSTRUCTURE AND APPROACH SLAB CONCRETE SHALL MEET THE REQUIREMENTS OF SECTION 540 – PRECAST CONCRETE.

11. ALL REINFORCING STEEL SHALL BE DETAILED AND FABRICATED USING PROCEDURES AND TOLERANCES IN ACCORDANCE WITH APPLICABLE PUBLICATIONS OF THE "CONCRETE REINFORCING STEEL INSTITUTE".

12. THE ADDITIONAL #7 BAR AND THREADED COUPLER AS DETAILED ON THE NEXT BEAM DETAILS 1 SHEET SHALL MEET THE REQUIREMENTS OF SECTION 507 FOR "REINFORCING STEEL, LEVEL I (EPOXY COATED)".

13. PAYMENT FOR THE ADDITIONAL #7 BAR AND THREADED COUPLER WILL BE INCLUDED IN THE UNIT BID PRICE FOR SPECIAL PROVISION (PRESTRESSED CONCRETE NEXT D BEAMS) (NEXT 32 D).

14. ALL REMAINING REINFORCING STEEL SHALL MEET THE REQUIREMENTS OF SECTION 507 FOR "REINFORCING STEEL, LEVEL II".

15. MINIMUM CLEAR COVER FOR REINFORCING STEEL SHALL BE AS FOLLOWS:

ALONG BACK FACES OF WALLS AGAINST EARTH	2 INCH
ALONG TOP SURFACE OF DECK SLAB:	2 INCH
ALONG BOTTOM SURFACE OF DECK SLAB:	1¾ INCH
ELSEWHERE UNLESS OTHERWISE INDICATED:	3 INCH

PRECAST ABUTMENTS AND POST-TENSIONING

16. IF A VERTICAL CONSTRUCTION JOINT IS REQUIRED BY THE CONTRACTOR FOR SHIPMENT OF THE ABUTMENTS, THE SECTIONS SHALL BE KEYED AND MATCH CAST. A JOINT DETAIL SHALL BE SHOWN ON THE FABRICATION DRAWINGS. NO LESS THAN TWO PILES SHALL SUPPORT EACH PRECAST ABUTMENT SECTION.

17. POST-TENSIONING AND ASSOCIATED ITEMS ARE ONLY REQUIRED IF THE PILE CAP IS CONSTRUCTED OF MORE THAN ONE UNIT. ANY POST-TENSIONING STRANDS AND CONDUIT SHALL ADHERE TO THE REQUIREMENTS OF SECTION 510 – PRESTRESSED CONCRETE. GALVANIZED ANCHOR ASSEMBLIES, CONDUIT, AND POST-TENSIONING STRANDS SHALL BE INCLUDED UNDER ITEM 540.10, "PRECAST CONCRETE STRUCTURE (ABUTMENT #1) AND/OR "PRECAST CONCRETE STRUCTURE (ABUTMENT #2)" AS APPROPRIATE. POST-TENSIONING STRANDS SHALL BE COVERED WITH SEAMLESS POLYPROPYLENE SHEATH (WITH CORROSION INHIBITOR GREASE BETWEEN SHEATH AND STRAND) FOR THE LENGTH OF THE STRAND, EXCEPT AT ANCHORAGE LOCATIONS.

18. GALVANIZE ANCHOR ASSEMBLIES AFTER FABRICATION ACCORDING TO AASHTO M232M/M 232.

19. DESIGN VALUES
    a. CONCRETE COMPRESSIVE STRENGTH: f'c = 5000 PSI.
    b. POST-TENSIONING STRANDS: 0.5 INCH DIAMETER, 270 KSI, LOW RELAXATION 7-WIRE STRANDS.
    c. ASSUMED MODULUS OF ELASTICITY IS 28,500 KSI.
    d. THERE SHALL BE 2 STRANDS PER CONDUIT.
    e. THE JACKING FORCE PER STRAND = 32 KIPS

20. THE CORRUGATED STEEL PIPE SHALL MEET THE REQUIREMENTS OF SUBSECTION 711.01. ALL COSTS ASSOCIATED WITH PLACING THE CORRUGATED STEEL PIPE, SHALL BE INCLUDED IN THE BID PRICE FOR ITEM 540.10, "PRECAST CONCRETE STRUCTURE (ABUTMENT #1)" AND ITEM 540.10, "PRECAST CONCRETE STRUCTURE (ABUTMENT #2)".

21. THE CONCRETE FOR THE ABUTMENT #1 AND ABUTMENT #2 PILE CAVITIES SHALL MEET THE REQUIREMENTS OF SPECIAL PROVISION (HIGH PERFORMANCE CONCRETE, RAPID SET).

22. PROPOSED SEQUENCE OF CONSTRUCTION:
    a. PREPARE AND GRADE FOUNDATION TO REQUIRED ELEVATION.
    b. DRIVE PILES.
    c. PLACE PRECAST ABUTMENTS AND INSTALL TRANSVERSE STRANDS (IF MORE THAN ONE UNIT).
    d. APPLY EPOXY TO MATCH CAST FACES OF VERTICAL CONSTRUCTION JOINT.
    e. USE A CALIBRATED JACK TO TENSION TO 3 KIPS TO REMOVE SAG IN STRANDS.
    f. CHECK ALIGNMENT OF PILE CAP ELEMENTS.
    g. STRESS POST-TENSIONING STRANDS USING A CALIBRATED JACK OPERATED BY QUALIFIED PERSONNEL WHO HAVE PREVIOUS EXPERIENCE IN POST-TENSIONING.
    h. FILL PILE CAVITIES WITH ITEM 900.608, "SPECIAL PROVISION (HIGH PERFORMANCE CONCRETE, RAPID SET)".
    i. PLACE PRECAST WINGWALLS AND GROUT SPLICE CONNECTORS.
    j. BACKFILL MAY BE COMPLETED AFTER SPLICE CONNECTOR GROUT HAS REACHED 85% OF 5,000 PSI. BACKFILL SHALL NOT EXCEED BRIDGE SEAT ELEVATIONS UNTIL NEXT BEAMS ARE SET AND THE CLOSURE POUR IS CAST.

23. ALTERNATE SEQUENCE OF CONSTRUCTION MAY BE SUBMITTED TO THE PROJECT MANAGER FOR APPROVAL.

NEXT D BEAMS

24. NEXT D BEAMS ARE A NON-PROPRIETARY SHAPE DEVELOPED BY PCI NORTHEAST (PCINE). STANDARDIZED SECTION PROPERTIES AND DETAILS MAY BE FOUND AT http://www.pcine.org.

25. DESIGN VALUES
    a. CONCRETE COMPRESSIVE STRENGTH: f'c = 10,000 PSI.
    b. CONCRETE COMPRESSIVE STRENGTH AT RELEASE: f'ci = 8,000 PSI
    c. PRESTRESSING STRANDS: 0.6 INCH DIAMETER, 270 KSI, LOW-RELAXATION 7-WIRE STRANDS
    d. ASSUMED MODULUS OF ELASTICITY = 28,500 KSI.
    e. PRESTRESSING STRANDS SHALL EACH BE PULLED TO HAVE A NET TENSION OF 44.0 KIPS AFTER ACCOUNTING FOR CHUCK SLIPPAGE.
    f. SERVICE LOADS

MEMBER MOMENT	1,191 K-FT
SUPERIMPOSED DEAD LOAD MOMENT	411 K-FT
LIVE LOAD AND IMPACT MOMENT	1,639 K-FT
DEAD LOAD REACTION	84 KIPS
LIVE LOAD AND IMPACT REACTION	97 KIPS
TOTAL REACTION	181 KIPS
CAMBER AT RELEASE	2 INCHES
FINAL CAMBER	2 3/4 INCHES

26. FORMING FOR ENDS OF FLANGES ALONG LONGITUDINAL CLOSURE POURS SHALL BE TREATED WITH CONCRETE SURFACE RETARDER, OR SIMILAR, TO PROVIDE A ROUGHENED SURFACE; AND SHALL BE POWER WASHED WITH WATER PRIOR TO ERECTION OF THE BEAMS.

27. FILL FLANGE CLOSURE POURS WITH HPC RAPID SET CONCRETE IN ACCORDANCE WITH ITEM 900.608 "SPECIAL PROVISION (HIGH PERFORMANCE CONCRETE, RAPID SET)".

28. METHOD OF FORMING FLANGE CONNECTION SHALL BE DETERMINED BY THE CONTRACTOR. THE FORMS SHALL BE REMOVABLE AND ABLE TO ACCOMMODATE DIFFERENTIAL CAMBER. FORM SUPPORTS SHALL NOT BE ATTACHED TO ANY PREFABRICATED SUPERSTRUCTURE ELEMENT BY DRILLING OR SIMILAR MEANS.

29. THE FABRICATOR MAY ALTER THE DESIGN AS DETAILED IN THESE PLANS TO ACCOMMODATE THEIR SPECIFIC OPERATION. THIS ALTERATION SHALL BE DESIGNED BY A PROFESSIONAL ENGINEER LICENSED IN STATE OF VERMONT TO MEET SPECIFIED CRITERIA AND SHALL BE APPROVED BY THE PROJECT MANAGER.

30. PROPOSED SEQUENCE OF CONSTRUCTION
    a. LAY OUT WORKING LINES THE ENTIRE WIDTH OF THE BRIDGE ALONG CENTERLINE OF BEARING, MEASURED FROM A SINGLE WORKING POINT. THE WORKING LINES SHALL BE BASED ON THE NOMINAL BEAM WIDTHS.
    b. VERIFY THE BEAM SEAT ELEVATIONS AND TAKE CORRECTIVE ACTION IF NECESSARY.
    c. INSTALL BEARINGS
    d. ERECT THE BEAMS TO FIT WITHIN THE WORKING LINES.
    e. ADJUST FASCIA BEAM TO FIT SNUG AGAINST ½" CORK ON INTERIOR OF CHEEK WALL.
    f. CONSTRUCT FORMS FOR THE FLANGE AND CURTAIN WALL CONNECTION POURS.
    g. GROUT CONNECTIONS BETWEEN BEAM FLANGES AND CURE.
    h. BACKFILL AND PREPARE GRADE FOR APPROACH SLABS.
    i. COMPLETE BEAM-END CLOSURE POUR TO BOTTOM OF DECK ALLOWING FOR APPROACH SLAB BRACKET.
    j. COMPLETE PLACEMENT OF BACKFILL AND PLACE APPROACH SLAB.
    k. GROUT REBAR DOWELS IN APPROACH SLAB.
    l. COMPLETE LONGITUDINAL CLOSURE POURS OF APPROACH SLAB.
    m. COMPLETE BEAM-END CLOSURE POUR TO TOP OF DECK AND APPROACH SLABS.

31. ALTERNATE SEQUENCE OF CONSTRUCTION MAY BE SUBMITTED TO THE PROJECT MANAGER FOR APPROVAL.

H-PILES

32. THE PILES SHALL BE HP 12X84

33. TO PREVENT DAMAGE TO THE PILES, PILE SHOES ARE REQUIRED FOR DRIVEN PILES AND SHALL CONFORM TO SUBSECTION 505.04 (f).

34. THE PILES SHALL BE DRIVEN TO A NOMINAL PILE DRIVING RESISTANCE (R_{NDR}) OF 385 KIPS, PROVIDED A MINIMUM PENETRATION OF 23 FEET BELOW THE BOTTOM OF PILE CAP HAS BEEN ACHIEVED.

35. A MINIMUM OF ONE DYNAMIC PILE TESTS SHALL BE CONDUCTED AT EACH ABUTMENT. PAYMENT WILL BE MADE UNDER ITEM 505.45, "DYNAMIC PILE LOADING TEST".

36. THE TOPS OF THE PILES AFTER DRIVING SHALL NOT VARY FROM THE POSITION SHOWN ON THE PLANS BY MORE THAN 3 INCHES. THE PILE ORIENTATION SHALL NOT VARY BY MORE THAN 5 DEGREES. THE CONTRACTOR SHALL DEMONSTRATE HOW THE TOLERANCES WILL BE MET TO THE SATISFACTION OF THE ENGINEER. THESE MEASURES SHALL BE DEMONSTRATED IN A SUBMITTAL TO BE ACCEPTED BEFORE PILE DRIVING COMMENCES.

37. FOR ESTIMATING PURPOSES, THE PILE TIP ELEVATIONS WERE ASSUMED AS SHOWN ON THE BORING LOGS. THE ACTUAL IN PLACE LENGTHS MAY VARY.

ABUTMENT CLOSURE/END DIAPHRAGM

38. THE ABUTMENT CLOSURE POUR SHALL BE MADE WITH HPC RAPID SET CONCRETE IN ACCORDANCE WITH ITEM 900.608, "SPECIAL PROVISION (HIGH PERFORMANCE CONCRETE, RAPID SET)".

APPROACH SLABS

39. PRECAST CONCRETE COMPRESSIVE STRENGTH: f'c = 5000 PSI.

40. SLAB EDGES IN CONTACT WITH HPC RAPID SET CONCRETE SHALL BE TREATED WITH CONCRETE SURFACE RETARDER, OR SIMILAR, TO PROVIDE A ROUGHENED SURFACE; AND SHALL BE POWER WASHED WITH WATER PRIOR TO INSTALLATION.

41. FILL CLOSURE POURS WITH HPC RAPID SET CONCRETE IN ACCORDANCE WITH ITEM 900.608, "SPECIAL PROVISON (HIGH PERFORMANCE CONCRETE, RAPID SET)".

42. THE APPROACH SLABS ARE TO BE SET AT THE GIVEN ELEVATIONS IN ORDER TO ACCOMMODATE THE ROADWAY GEOMETRY. THE PAVEMENT OVER THE APPROACH SLAB WILL VARY TO ACCOUNT FOR THE DIFFERENCE BETWEEN THE TOP OF SLAB ELEVATIONS AND THE FINISH GRADE. A MINIMUM OF 3" OF PAVEMENT SHALL BE MAINTAINED OVER THE APPROACH SLABS.

MISCELLANEOUS

43. A TEMPORARY BRIDGE WAS PLACED DOWNSTREAM OF THE EXISTING, FAILED STRUCTURE. REMOVAL OF THIS TEMPORARY BRIDGE INCLUDING APPROACH GUARDRAIL SHALL BE PAID FOR UNDER ITEM 900.645 "SPECIAL PROVISION (REMOVAL OF TEMPORARY BRIDGE)". APPROACHES TO THE TEMPORARY BRIDGE WILL BE REMOVED UNDER THE APPROPRIATE EXCAVATION ITEM(S) IN THE CONTRACT. THE TEMPORARY BRIDGE IS THE PROPERTY OF VTRANS AND SHALL BE RETURNED TO THE VTRANS MAINTENANCE FACILITY IN SPRINGFIELD, VT. CONTACT HOBERT GATES AT (802) 524-5926 TO MAKE NECESSARY ARRANGEMENTS AS PER THE SPECIAL PROVISIONS.

44. CONTRACTOR TO REMOVE ANY REMAINING SECTIONS OF THE OLD ABUTMENTS NEEDED FOR INSTALLATION OF THE PILES AND NEW ABUTMENTS. PAYMENT FOR REMOVAL SHALL BE MADE UNDER ITEM 529.20, PARTIAL REMOVAL OF STRUCTURE (ABUTMENT #1) OR PARTIAL REMOVAL OF STRUCTURE (ABUTMENT #2).

STATE OF VERMONT
AGENCY OF TRANSPORTATION

QUANTITY SHEET 1

SUMMARY OF ESTIMATED QUANTITIES				TOTALS		DESCRIPTIONS			
ROADWAY	EROSION CONTROLS	BRIDGE	FULL CE ITEMS	GRAND TOTAL	FINAL	UNIT	ITEMS	ITEM NUMBER	ROUND
1				1		LS	CLEARING AND GRUBBING, INCLUDING INDIVIDUAL TREES AND STUMPS	201.10	
5875				5875		CY	COMMON EXCAVATION	203.15	
		1125		1125		CY	UNCLASSIFIED CHANNEL EXCAVATION	203.27	
450				450		CY	SAND BORROW	203.31	
200				200		CY	GRANULAR BORROW	203.32	
1				1		CY	TRENCH EXCAVATION OF EARTH, EXPLORATORY (N.A.B.I.)	204.22	
		425		425		CY	STRUCTURE EXCAVATION	204.25	
		325		325		CY	GRANULAR BACKFILL FOR STRUCTURES	204.30	
425				425		SY	COLD PLANING, BITUMINOUS PAVEMENT	210.10	
1220				1220		CY	SUBBASE OF DENSE GRADED CRUSHED STONE	301.35	
20				20		CY	AGGREGATE SURFACE COURSE	401.10	
55				55		CY	AGGREGATE SHOULDERS, IN PLACE	402.10	
12				12		CWT	EMULSIFIED ASPHALT	404.65	
1				1		LU	PRICE ADJUSTMENT, ASPHALT CEMENT (N.A.B.I.)	406.50	
		1		1		LS	FURNISHING EQUIPMENT FOR DRIVING PILING	504.10	
		870		870		LF	STEEL PILING, HP 12 X 84	505.165	
		2		2		EACH	DYNAMIC PILE LOADING TEST	505.45	
		4900		4900		LB	REINFORCING STEEL, LEVEL II	507.12	
		70		70		LF	BRIDGE EXPANSION JOINT, ASPHALTIC PLUG	516.10	
		325		325		SY	MEMBRANE WATERPROOFING, SPRAY APPLIED	520.10	
		70		70		LF	JOINT SEALER, HOT POURED	524.11	
		170		170		LF	BRIDGE RAILING, GALVANIZED 3 RAIL BOX BEAM	525.335	
		1		1		LS	MAINTENANCE OF STRUCTURES AND APPROACHES	527.10	
		1		1		EACH	PARTIAL REMOVAL OF STRUCTURE (ABUTMENT #1)	529.20	
		1		1		EACH	PARTIAL REMOVAL OF STRUCTURE (ABUTMENT #2)	529.20	
		16		16		EACH	BEARING DEVICE ASSEMBLY, STEEL REINFORCED ELASTOMERIC PAD	531.17	
		1		1		LS	PRECAST CONCRETE STRUCTURE (ABUTMENT #1)	540.10	
		1		1		LS	PRECAST CONCRETE STRUCTURE (ABUTMENT #2)	540.10	
		1		1		LS	PRECAST CONCRETE STRUCTURE (APPROACH SLAB #1)	540.10	
		1		1		LS	PRECAST CONCRETE STRUCTURE (APPROACH SLAB #2)	540.10	
	1			1		MGAL	DUST CONTROL WITH WATER	609.10	
		925		925		CY	STONE FILL, TYPE IV	613.13	
404				404		LF	BOX BEAM GUARDRAIL	621.30	
4				4		EACH	GUARDRAIL APPROACH SECTION, GALVANIZED 3 RAIL BOX BEAM	621.725	
200				200		HR	FLAGGERS	630.15	
			1	1		LS	FIELD OFFICE, ENGINEERS	631.10	
			1	1		LS	TESTING EQUIPMENT, CONCRETE	631.16	
			1	1		LS	TESTING EQUIPMENT, BITUMINOUS	631.17	
			3000	3000		DL	FIELD OFFICE TELEPHONE (N.A.B.I.)	631.26	
1				1		LS	MOBILIZATION/DEMOBILIZATION	635.11	

DETAILED SUMMARY OF QUANTITIES

QUANTITIES	UNIT	ITEMS
		EARTHWORK SUMMARY
5875	CY	COMMON EXCAVATION (5875 * 1.0)
844	CY	UNCLASSIFIED CHANNEL EXCAVATION (1125 * 0.75)
319	CY	STRUCTURE EXCAVATION (425 * 0.75)
7038	CY	CY
12	CY	ROUNDING
7050	CY	TOTAL FILL AVAILABLE
200	CY	TOTAL FILL REQUIRED (GRANULAR BORROW)
6850	CY	TOTAL WASTE
		SUPERPAVE BITUMINOUS CONCRETE PAVEMENT
365	TON	TYPE IIS
285	TON	TYPE IVS
650	TON	TOTAL SUPERPAVE

PROJECT NAME: PITTSFIELD
PROJECT NUMBER: ER BRF 022-1(23)

FILE NAME: s86e060quantitysheet.dgn
PROJECT LEADER: K. HIGGINS
DESIGNED BY: J. GRIGAS
QUANTITY SHEET 1

PLOT DATE: 18-SEP-2013
DRAWN BY: J. GRIGAS
CHECKED BY: W. LAMMER
SHEET 4 OF 67

STATE OF VERMONT
AGENCY OF TRANSPORTATION

QUANTITY SHEET 2

SUMMARY OF ESTIMATED QUANTITIES				TOTALS		DESCRIPTIONS			
ROADWAY	EROSION CONTROLS	BRIDGE	FULL CE ITEMS	GRAND TOTAL	FINAL	UNIT	ITEMS	ITEM NUMBER	ROUND
1275				1275		LF	4 INCH WHITE LINE	646.20	
1275				1275		LF	4 INCH YELLOW LINE	646.21	
		925		925		SY	GEOTEXTILE UNDER STONE FILL	649.31	
	100			100		SY	GEOTEXTILE FOR SILT FENCE	649.51	
	125			125		SY	GEOTEXTILE FOR SILT FENCE, WOVEN WIRE REINFORCED	649.515	
	150			150		SY	GEOTEXTILE FOR FILTER CURTAIN	649.61	
	35			35		LB	SEED	651.15	
	35			35		LB	SEED, WINTER RYE	651.17	
	291			291		LB	FERTILIZER	651.18	
	2			2		TON	AGRICULTURAL LIMESTONE	651.20	
	2			2		TON	HAY MULCH	651.25	
	325			325		CY	TOPSOIL	651.35	
		325		325		SY	GRUBBING MATERIAL	651.40	
	1			1		LS	EPSC PLAN	652.10	
	50			50		HR	MONITORING EPSC PLAN	652.20	
	1			1		LU	MAINTENANCE OF EPSC PLAN (N.A.B.I.)	652.30	
	775			775		SY	TEMPORARY EROSION MATTING	653.20	
	60			60		CY	VEHICLE TRACKING PAD	653.35	
	425			425		LF	BARRIER FENCE	653.50	
	700			700		LF	PROJECT DEMARCATION FENCE	653.55	
14.83				14.83		SF	TRAFFIC SIGNS, TYPE A	675.20	
80				80		LF	SQUARE TUBE SIGN POST AND ANCHOR	675.341	
1				1		LU	PRICE ADJUSTMENT, FUEL (N.A.B.I.)	690.50	
		43		43		CY	SPECIAL PROVISION (HIGH PERFORMANCE CONCRETE, RAPID SET)(FPQ)	900.608	
		317		317		LF	SPECIAL PROVISION (PRESTRESSED CONCRETE NEXT D BEAMS)(NEXT 32 D)	900.640	
1				1		LS	SPECIAL PROVISION (REMOVAL OF TEMPORARY BRIDGE)	900.645	
1				1		LS	SPECIAL PROVISION (TRAFFIC CONTROL, ALL-INCLUSIVE)	900.645	
1				1		LU	SPECIAL PROVISION (MAT DENSITY PAY ADJUSTMENT, SMALL QUANTITY)(N.A.B.I)	900.650	
1				1		LU	SPECIAL PROVISION (MIXTURE PAY ADJUSTMENT)(N.A.B.I)	900.650	
650				650		TON	SPECIAL PROVISION (BITUMINOUS CONCRETE PAVEMENT, SMALL QUANTITY)	900.680	

DETAILED SUMMARY OF QUANTITIES		
QUANTITIES	UNIT	ITEMS

PROJECT NAME: PITTSFIELD
PROJECT NUMBER: ER BRF 022-1(23)

FILE NAME: s86e060quantitysheet.dgn
PROJECT LEADER: K. HIGGINS
DESIGNED BY: J. GRIGAS
QUANTITY SHEET 2

PLOT DATE: 07-OCT-2013
DRAWN BY: J. GRIGAS
CHECKED BY: W. LAMMER
SHEET 5 OF 67

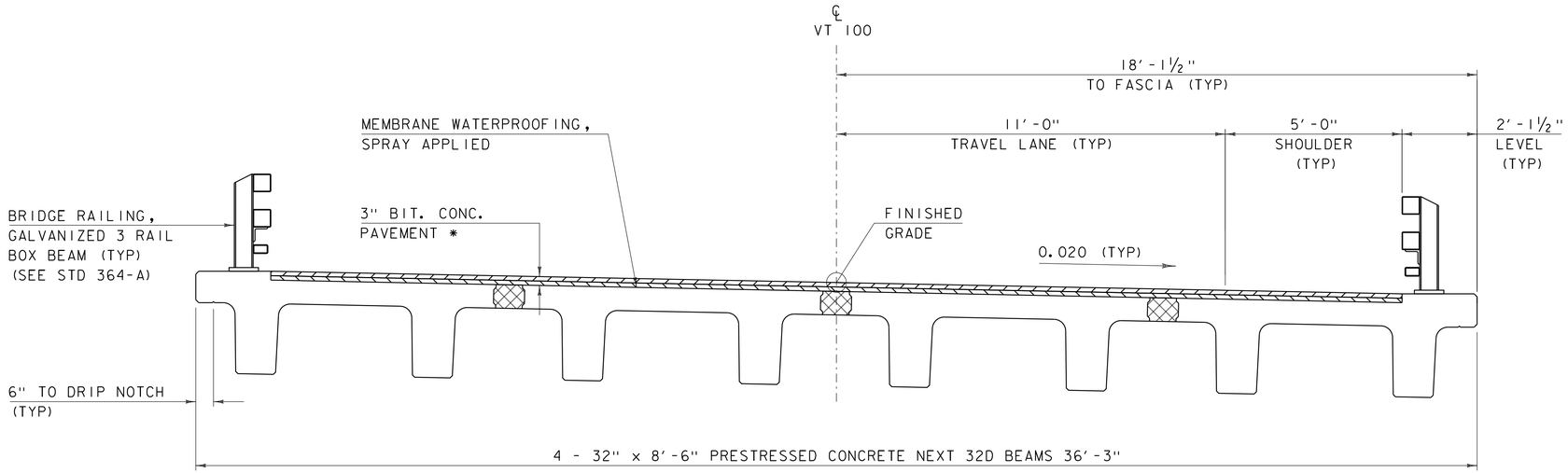

* 1 ½" SUPERPAVE BITUMINOUS CONCRETE PAVEMENT TYPE IVS
1 ½" SUPERPAVE BITUMINOUS CONCRETE PAVEMENT TYPE IVS

BRIDGE TYPICAL SECTION

SCALE ½" = 1'-0"

MATERIAL TOLERANCES

(IF USED ON PROJECT)

SURFACE	
- PAVEMENT (TOTAL THICKNESS)	+/- ¼"
- AGGREGATE SURFACE COURSE	+/- ½"
SUBBASE	+/- 1"
SAND BORROW	+/- 1"

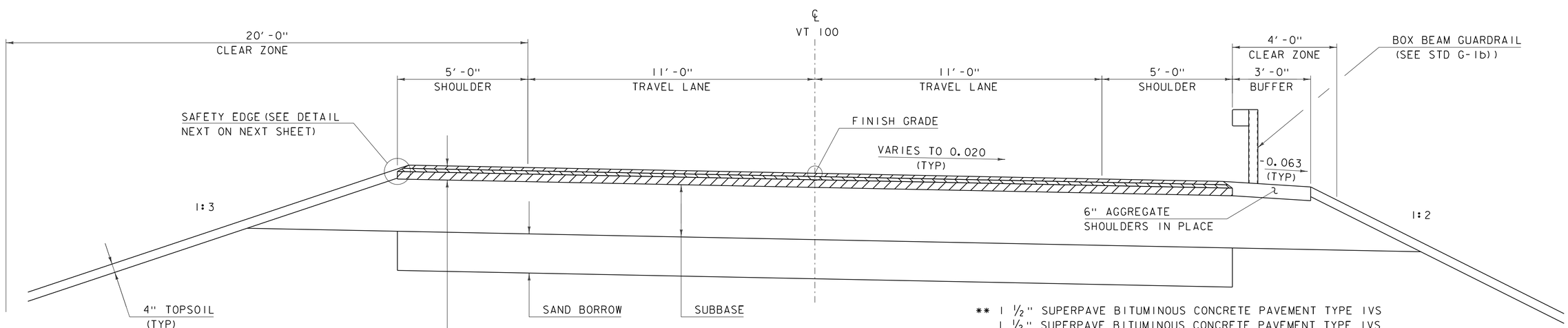

** 1 ½" SUPERPAVE BITUMINOUS CONCRETE PAVEMENT TYPE IVS
1 ½" SUPERPAVE BITUMINOUS CONCRETE PAVEMENT TYPE IVS
3 ½" SUPERPAVE BITUMINOUS CONCRETE PAVEMENT TYPE IIS

2'-0" SUBBASE OF DENSE GRADED CRUSHED STONE
1'-6" SAND BORROW

ROAD TYPICAL SECTION

SCALE ½" = 1'-0"

PROJECT NAME: PITTSFIELD	
PROJECT NUMBER: ER BRF 022-1(23)	
FILE NAME: s86e060typ.dgn	PLOT DATE: 18-SEP-2013
PROJECT LEADER: K. HIGGINS	DRAWN BY: J. GRIGAS
DESIGNED BY: J. GRIGAS	CHECKED BY: J. SALVATORI
TYPICAL SECTIONS 1	SHEET 6 OF 67

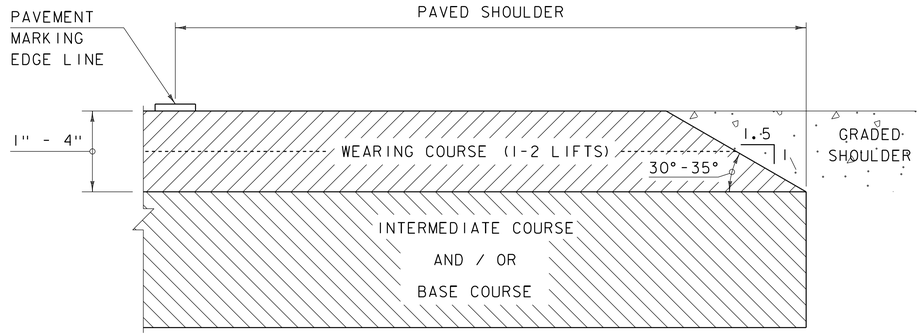

SAFETY EDGE DETAIL

NOT TO SCALE

NOTE: LEVELING COURSE MAY INCLUDE THE "SAFETY EDGE" AT THE CONTRACTOR'S CHOICE.

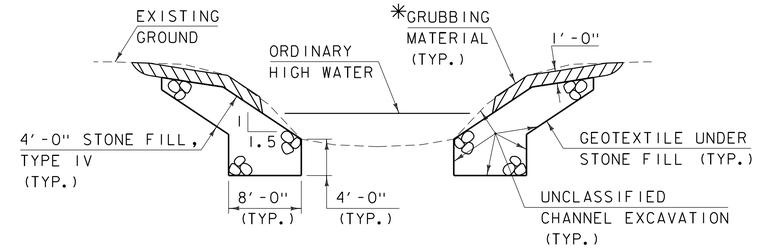

TYPICAL CHANNEL SECTION

(NOT TO SCALE)

*GRUBBING MATERIAL SHALL NOT BE PLACED ON THE STONE FILL IN THE AREA UNDER THE BRIDGE. WHENEVER CHANNEL SLOPE INTERSECTS ROADWAY SUBBASE, GRUBBING MATERIAL SHALL BEGIN AT THE BOTTOM OF SUBBASE.

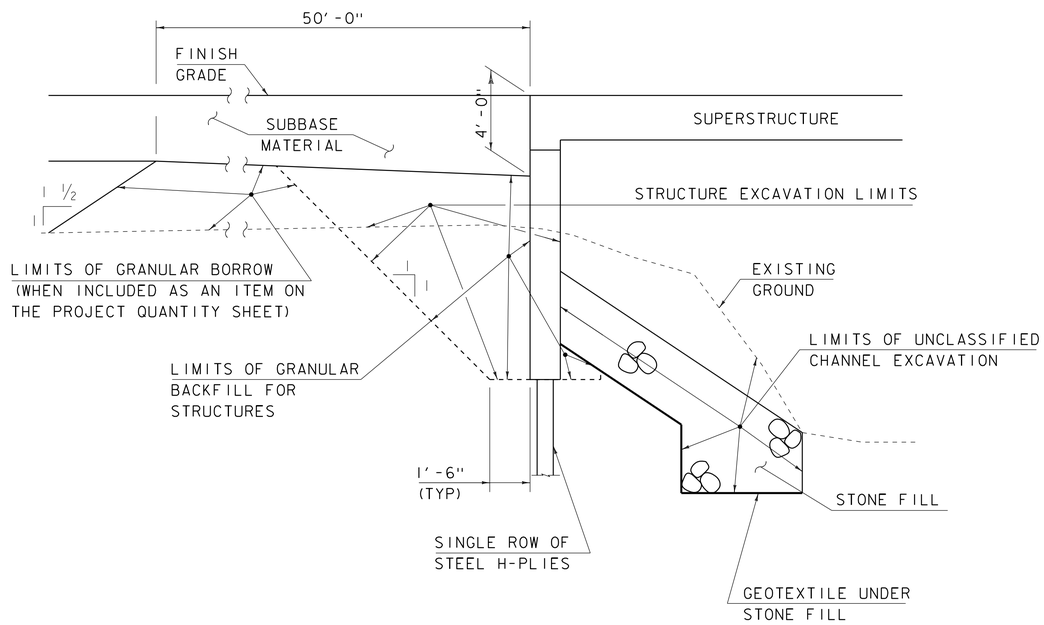

TYPICAL INTEGRAL ABUTMENT SECTION

NOT TO SCALE

ACTUAL LIMITS OF STRUCTURE EXCAVATION SHALL BE DETERMINED BY THE CONTRACTOR. HOWEVER, ONLY THE EXCAVATION BETWEEN THE LIMITS SHOWN WILL BE PAID FOR UNDER ITEM 204.25 "STRUCTURE EXCAVATION". EXCAVATION BY THE CONTRACTOR OUTSIDE OF THESE LIMITS WILL BE AT THE EXPENSE OF THE CONTRACTOR.

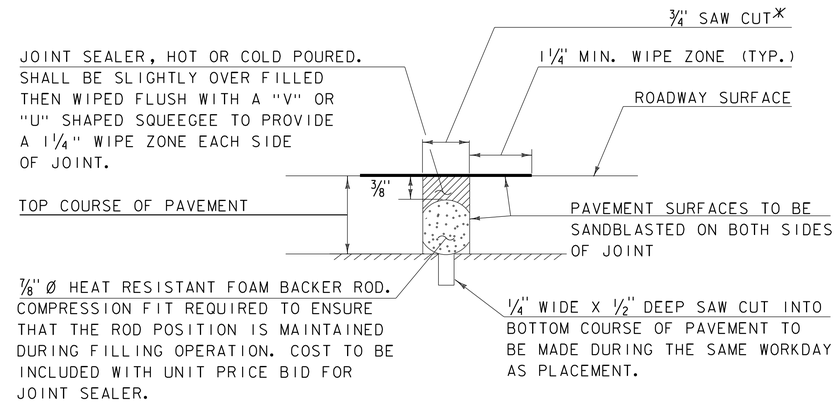

SAWED PAVEMENT JOINT DETAIL

(NOT TO SCALE)

*JOINT IS TO BE LOCATED ACCURATELY BY STRING LINING, OR OTHER MEANS, PRIOR TO PAVING, SO THAT THE SAW CUTS WILL BE MADE DIRECTLY OVER THE END OF CONCRETE DECK. JOINT SHALL BE CUT DRY IN A SINGLE PASS AND BE SEALED WITHIN 24 HOURS OR PRIOR TO EXPOSURE TO TRAFFIC. JOINT SHALL BE CLEANED PRIOR TO APPLYING THE JOINT SEALER.

PROJECT NAME: PITTSFIELD	
PROJECT NUMBER: ER BRF 022-1(23)	
FILE NAME: s86e060typ.dgn	PLOT DATE: 18-SEP-2013
PROJECT LEADER: K. HIGGINS	DRAWN BY: K. FRIEDLAND
DESIGNED BY: G. LAROCHE	CHECKED BY: J. SALVATORI
TYPICAL SECTIONS 2	SHEET 7 OF 67

GENERAL INFORMATION

SYMBOLOGY LEGEND NOTE

THE SYMBOLOGY ON THIS SHEET IS INTENDED TO COVER STANDARD CONVENTIONAL SYMBOLOGY. THE SYMBOLOGY IS USED FOR EXISTING & PROPOSED FEATURES WITH HEAVIER LINEWEIGHT, IN COMBINATION WITH PROJECT ANNOTATION, AS NOTED ON PROJECT PLAN SHEETS. THIS LEGEND SHEET COVERS THE BASICS. SYMBOLOGY ON PLANS MAY VARY, PLAN ANNOTATIONS AND NOTES SHOULD BE USED TO CLARIFY AS NEEDED.

R.O.W. ABBREVIATIONS (CODES) & SYMBOLS

POINT	CODE	DESCRIPTION
	CH	CHANNEL EASEMENT
	CONST	CONSTRUCTION EASEMENT
	CUL	CULVERT EASEMENT
	D&C	DISCONNECT & CONNECT
	DIT	DITCH EASEMENT
	DR	DRAINAGE EASEMENT
	DRIVE	DRIVEWAY EASEMENT
	EC	EROSION CONTROL
	I&M	INSTALL & MAINTAIN EASEMENT
	LAND	LANDSCAPE EASEMENT
	SR	SLOPE RIGHT
	UE	UTILITY EASEMENT
	(P)	PERMANENT EASEMENT
	(T)	TEMPORARY EASEMENT
■	BNDNS	BOUND SET
⊡	BNDNS	BOUND TO BE SET
●	IPNS	IRON PIN SET
◎	IPNS	IRON PIN TO BE SET
⊠	CALC	CALCULATED ROW POINT
[DISTANCE]		DISTANCE CARRIED ON NEXT SHEET

COMMON TOPOGRAPHIC POINT SYMBOLS

POINT	CODE	DESCRIPTION
	APL	BOUND APPARENT LOCATION
	BM	BENCH MARK
	BND	BOUND
	CB	CATCH BASIN
	COMB	COMBINATION POLE
	DITHR	DROP INLET THROATED DNC
	EL	ELECTRIC POWER POLE
	FPOLE	FLAGPOLE
	GASFIL	GAS FILLER
	GP	GUIDE POST
	GSO	GAS SHUT OFF
	GUY	GUY POLE
	GUYW	GUY WIRE
	GV	GATE VALUE
	H	TREE HARDWOOD
	HCTRL	CONTROL HORIZONTAL
	HVCTRL	CONTROL HORIZ. & VERTICAL
	HYD	HYDRANT
	IP	IRON PIN
	IPIPE	IRON PIPE
	LI	LIGHT - STREET OR YARD
	MB	MAILBOX
	MH	MANHOLE (MH)
	MM	MILE MARKER
	PM	PARKING METER
	PMK	PROJECT MARKER
	POST	POST STONE/WOOD
	RRSIG	RAILROAD SIGNAL
	RRSL	RAILROAD SWITCH LEVER
	S	TREE SOFTWOOD
	SAT	SATELLITE DISH
	SHRUB	SHRUB
	SIGN	SIGN
	STUMP	STUMP
	TEL	TELEPHONE POLE
	TIE	TIE
	TSIGN	SIGN W/DOUBLE POST
	VCTRL	CONTROL VERTICAL
	WELL	WELL
	WSO	WATER SHUT OFF

THESE ARE COMMON VAOT SURVEY POINT SYMBOLS FOR EXISTING FEATURES, ALSO USED FOR PROPOSED FEATURES WITH HEAVIER LINEWEIGHT, IN COMBINATION WITH PROPOSED ANNOTATION.

PROPOSED GEOMETRY CODES

CODE	DESCRIPTION
PC	POINT OF CURVATURE
PI	POINT OF INTERSECTION
CC	CENTER OF CURVE
PT	POINT OF TANGENCY
PCC	POINT OF COMPOUND CURVE
PRC	POINT OF REVERSE CURVE
POB	POINT OF BEGINNING
POE	POINT OF ENDING
STA	STATION PREFIX
AH	AHEAD STATION SUFFIX
BK	BACK STATION SUFFIX
D	CURVE DEGREE OF (100FT)
R	CURVE RADUIS OF
T	CURVE TANGENT LENGTH
L	CURVE LENGTH OF
E	CURVE EXTERNAL DISTANCE

UTILITY SYMBOLOGY

UNDERGROUND UTILITIES

UT	TELEPHONE
UE	ELECTRIC
UC	CABLE (TV)
UEC	ELECTRIC+CABLE
UET	ELECTRIC+TELEPHONE
UCT	CABLE+TELEPHONE
UECT	ELECTRIC+CABLE+TELEP.
G	GAS LINE
W	WATER LINE
S	SANITARY SEWER (SEPTIC)

ABOVE GROUND UTILITIES (AERIAL)

T	TELEPHONE
E	ELECTRIC
C	CABLE (TV)
EC	ELECTRIC+CABLE
ET	ELECTRIC+TELEPHONE
AER E&T	ELECTRIC+TELEPHONE
CT	CABLE+TELEPHONE
ECT	ELECTRIC+CABLE+TELEP.
	UTILITY POLE GUY WIRE

PROJECT CONSTRUCTION SYMBOLOGY

PROJECT DESIGN & LAYOUT SYMBOLOGY

CZ	CLEAR ZONE
	PLAN LAYOUT MATCHLINE

PROJECT CONSTRUCTION FEATURES

	TOP OF CUT SLOPE
	TOE OF FILL SLOPE
	STONE FILL
	BOTTOM OF DITCH ℄
	CULVERT PROPOSED
	STRUCTURE SUBSURFACE
PDF PDF	PROJECT DEMARCATION FENCE
BF BF	BARRIER FENCE
	TREE PROTECTION ZONE (TPZ)
	STRIPING LINE REMOVAL
	SHEET PILES

CONVENTIONAL BOUNDARY SYMBOLOGY

BOUNDARY LINES

TOWN LINE	TOWN BOUNDARY LINE
COUNTY LINE	COUNTY BOUNDARY LINE
STATE LINE	STATE BOUNDARY LINE
	PROPOSED STATE R.O.W. (LIMITED ACCESS)
	PROPOSED STATE R.O.W.
	STATE ROW (LIMITED ACCESS)
	STATE ROW
	TOWN ROW
	PERMANENT EASEMENT LINE (P)
	TEMPORARY EASEMENT LINE (T)
	SURVEY LINE
P/L P/L	PROPERTY LINE (P/L)
SR SR SR	SLOPE RIGHTS
6f 6f	6F PROPERTY BOUNDARY
4f 4f	4F PROPERTY BOUNDARY
HAZ HAZ	HAZARDOUS WASTE

EPSC LAYOUT PLAN SYMBOLOGY

EPSC MEASURES

	FILTER CURTAIN
	SILT FENCE
	SILT FENCE WOVEN WIRE
	CHECK DAM
	DISTURBED AREAS REQUIRING RE-VEGETATION
	EROSION MATTING

ENVIRONMENTAL RESOURCES

	WETLAND BOUNDARY
	RIPARIAN BUFFER ZONE
	WETLAND BUFFER ZONE
	SOIL TYPE BOUNDARY
T&E	THREATENED & ENDANGERED SPECIES
HAZ HAZ	HAZARDOUS WASTE AREA
AG	AGRICULTURAL LAND
HABITAT	FISH & WILDLIFE HABITAT
FLOOD PLAIN	FLOOD PLAIN
OHW	ORDINARY HIGH WATER (OHW)
	STORM WATER
	USDA FOREST SERVICE LANDS
	WILDLIFE HABITAT SUIT/CONN

ARCHEOLOGICAL & HISTORIC

ARCH	ARCHEOLOGICAL BOUNDARY
HISTORIC DIST	HISTORIC DISTRICT BOUNDARY
HISTORIC	HISTORIC AREA
H	HISTORIC STRUCTURE

CONVENTIONAL TOPOGRAPHIC SYMBOLOGY

EXISTING FEATURES

	ROAD EDGE PAVEMENT
	ROAD EDGE GRAVEL
	DRIVEWAY EDGE
	DITCH
	FOUNDATION
	FENCE (EXISTING)
	FENCE WOOD POST
	FENCE STEEL POST
	GARDEN
	ROAD GUARDRAIL
	RAILROAD TRACKS
	CULVERT (EXISTING)
	STONE WALL
	WALL
	WOOD LINE
	BRUSH LINE
	HEDGE
	BODY OF WATER EDGE
	LEDGE EXPOSED

PROJECT NAME: PITTSFIELD
PROJECT NUMBER: ER BRF 022-1(23)

FILE NAME: s86e060Legend.dgn
PROJECT LEADER: K. HIGGINS
DESIGNED BY: J. GRIGAS
LEGEND SHEET

PLOT DATE: 18-SEP-2013
DRAWN BY: K. FRIEDLAND
CHECKED BY: J. SALVATORI
SHEET 8 OF 67

GPS CONTROL POINTS

HVCTRL #1

FRENCH AZ MK

NORTH = 459237.372
EAST = 1556107.491
ELEV. = 871.130

GENERAL LOCATION, PITTSFIELD, VT. OWNERSHIP, MEL COLTON, 2903 VT ROUTE 100, PITTSFIELD, VT 05762.

TO REACH FROM THE INTERSECTION OF VT ROUTE 107 AND VT ROUTE 100 IN STOCKBRIDGE, GO WEST ALONG VT ROUTE 100 FOR 2.8 MI (4.5 KM) TO THE INTERSECTION OF UPPER MICHIGAN ROAD RIGHT. CONTINUE STRAIGHT AHEAD AND GO SOUTH ALONG VT ROUTE 100 FOR 1.0 MI (1.6 KM) TO THE SITE OF THE MARK ON THE LEFT.

THE MARK IS SET 8 CM (3 INCHES) BELOW GROUND SURFACE IN THE TOP OF A 30 CM (12 INCHES) DIAMETER CONCRETE MONUMENT.

IT IS 10.4 M (34.1 FT) EAST OF AND ABOUT 0.3 M (1.0 FT) LOWER THAN THE CENTERLINE OF VT ROUTE 100, 40.7 M (133.5 FT) NORTHEAST OF POLE NO 138/31 WITH TRANSFORMER, 28.5 M (93.5 FT) NORTH-NORTHEAST OF THE CENTERLINE OF THE MOST NORTHERLY ENTRANCE TO A CIRCULAR GRAVEL DRIVE LEADING TO A THREE-BAY GARAGE, 36.3 M (119.1 FT) NORTH OF A WOODEN MARKER POST, 30.2 M (99.1 FT) NORTH OF THE CENTER OF THE NORTHEAST (OUTLET) END OF A 25 CM (10 INCHES) DIAMETER PLASTIC CULVERT, AND 17.4 M (57.1 FT) SOUTH OF POLE NO 5/30/137 AND A FIBERGLASS WITNESS POST.

HVCTRL #2

FRENCH

NORTH = 458048.930
EAST = 1555727.568
ELEV. = 894.135

GENERAL LOCATION, PITTSFIELD, VT. OWNERSHIP, DOUG JOHNSTONE, 352 BOMBADILL PATH, PITTSFIELD, VT 05762.

TO REACH FROM THE INTERSECTION OF VT ROUTE 107 AND VT ROUTE 100 IN STOCKBRIDGE, GO WEST ALONG VT ROUTE 100 FOR 2.8 MI (4.5 KM) TO THE INTERSECTION OF UPPER MICHIGAN ROAD RIGHT. CONTINUE STRAIGHT AHEAD AND GO SOUTH ALONG VT ROUTE 100 FOR 1.3 MI (2.1 KM) TO THE SITE OF THE MARK ON THE RIGHT.

THE MARK IS SET FLUSH WITH THE GROUND SURFACE IN THE TOP OF A 30 CM (12 INCHES) DIAMETER CONCRETE MONUMENT.

IT IS 12.8 M (42.0 FT) WEST OF AND ABOUT 0.6 M (2.0 FT) LOWER THAN THE CENTERLINE OF VT ROUTE 100, 6.5 M (21.3 FT) NORTH-NORTHEAST OF THE CENTERLINE OF A GRAVEL DRIVE, 17.4 M (57.1 FT) NORTH OF POLE NO 5-1/5/39/25T/146, 17.7 M (58.1 FT) SOUTHWEST OF THE CENTER OF THE WEST (OUTLET) END OF A 40 CM (16 INCHES) DIAMETER CONCRETE CULVERT WITH STONE MASONRY HEAD WALL, 29.7 M (97.4 FT) SOUTHWEST OF POLE NO 38, 29.2 M (95.8 FT) NORTHEAST OF THE NORTHEAST CORNER OF HOUSE NO 2715, AND 2.2 M (7.2 FT) NORTH OF A WOODEN POST AND A FIBERGLASS WITNESS POST.

TRAVERSE TIES

HVCTRL #3

NORTH = 457406.282
EAST = 1555819.639
ELEV. = 907.443

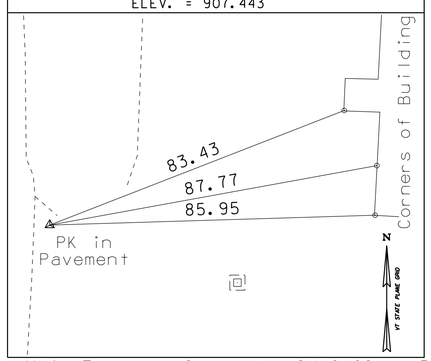

HVCTRL #4

NORTH = 456538.375
EAST = 1555647.467
ELEV. = 895.633

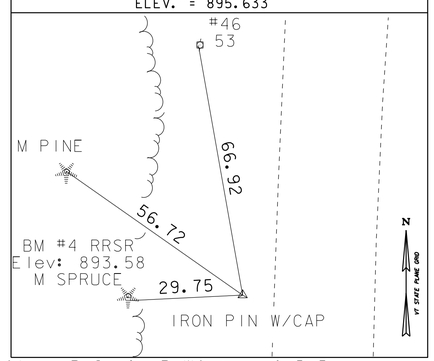

NORTH =	
EAST =	
ELEV. =	

NORTH =	
EAST =	
ELEV. =	

NORTH =	
EAST =	
ELEV. =	

* Main Traverse Completed 2/10/09 by R.Gilman P.C. & P.Winters & D.Breer

ALIGNMENT TIES

NORTH =	
EAST =	
ELEV. =	

NORTH =	
EAST =	
ELEV. =	

NORTH =	
EAST =	
ELEV. =	

NORTH =	
EAST =	
ELEV. =	

NORTH =	
EAST =	
ELEV. =	

DATUM

VERTICAL	NAVD 88
HORIZONTAL	NAD 83 (07)
ADJUSTMENT	Compass

PROJECT NAME: PITTSFIELD
PROJECT NUMBER: ER BRF 022-1(23)

FILE NAME: x86e060ti.dgn
PROJECT LEADER: K. HIGGINS
DESIGNED BY: J. SALVATORI
TIE SHEET

PLOT DATE: 19-SEP-2013
DRAWN BY: S. DONOVAN
CHECKED BY: P. BEYOR
SHEET 9 OF 67

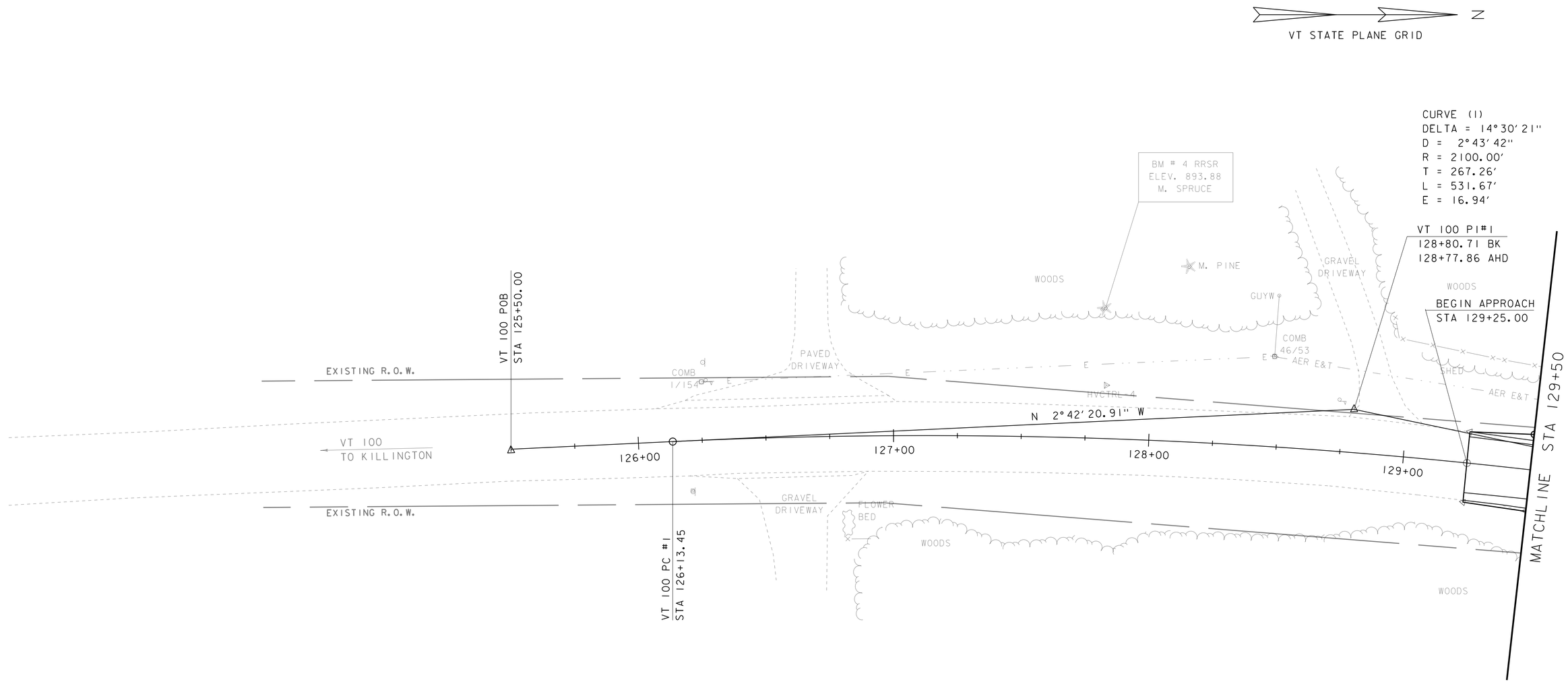

LAYOUT SHEET 1

SCALE 1" = 20'-0"

20 0 20

PROJECT NAME: PITTSFIELD	
PROJECT NUMBER: ER BRF 022-1(23)	
FILE NAME: s86e060bdr.dgn	PLOT DATE: 18-SEP-2013
PROJECT LEADER: K. HIGGINS	DRAWN BY: K. FRIEDLAND
DESIGNED BY: J. SALVATORI	CHECKED BY: J. SALVATORI
LAYOUT SHEET 1	SHEET 10 OF 67

SPECIAL PROVISION
(REMOVAL OF TEMPORARY BRIDGE AND APPROACHES)
STA 129+00.00 - 135+50.00

CONSTRUCT GRAVEL DRIVE
W/ 5'-0" PAVED APRON
STA 129+81.00 - 130+46.00 RT
STA 132+77.00 - 133+30.00 LT
STA 134+89.00 - 135+50.00 LT

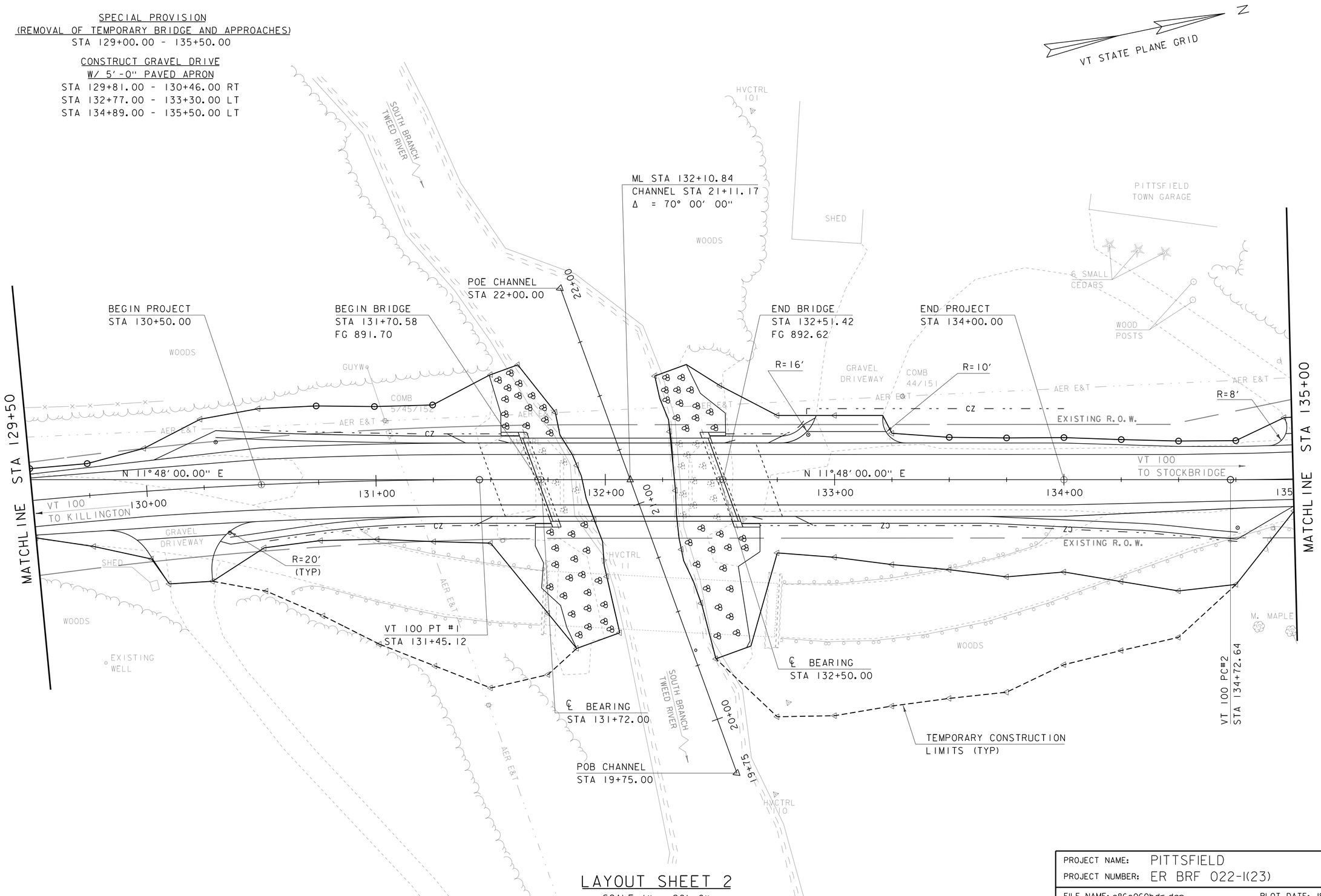

LAYOUT SHEET 2
SCALE 1" = 20'-0"
20 0 20

PROJECT NAME: PITTSFIELD	
PROJECT NUMBER: ER BRF 022-1(23)	
FILE NAME: s86e060bdr.dgn	PLOT DATE: 18-SEP-2013
PROJECT LEADER: K. HIGGINS	DRAWN BY: K. FRIEDLAND
DESIGNED BY: J. SALVATORI	CHECKED BY: J. SALVATORI
LAYOUT SHEET 2	SHEET 11 OF 67

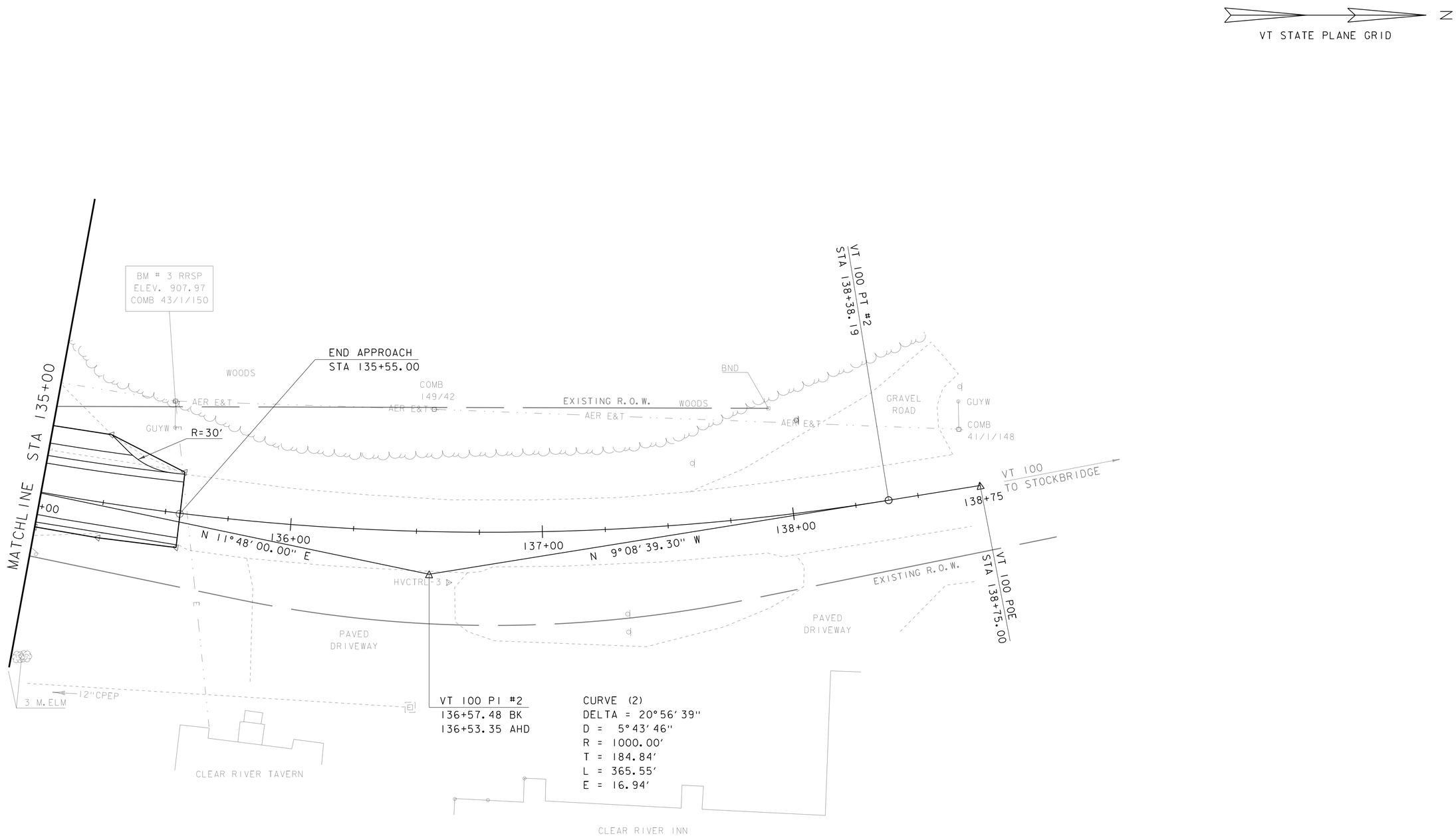

VT 100 PI #2
136+57.48 BK
136+53.35 AHD

CURVE (2)
DELTA = 20°56'39"
D = 5°43'46"
R = 1000.00'
T = 184.84'
L = 365.55'
E = 16.94'

LAYOUT SHEET 3

SCALE 1" = 20'-0"
20 0 20

PROJECT NAME: PITTSFIELD	
PROJECT NUMBER: ER BRF 022-1(23)	
FILE NAME: s86e060bdr.dgn	PLOT DATE: 18-SEP-2013
PROJECT LEADER: K. HIGGINS	DRAWN BY: K. FRIEDLAND
DESIGNED BY: J. SALVATORI	CHECKED BY: J. SALVATORI
LAYOUT SHEET 3	SHEET 12 OF 67

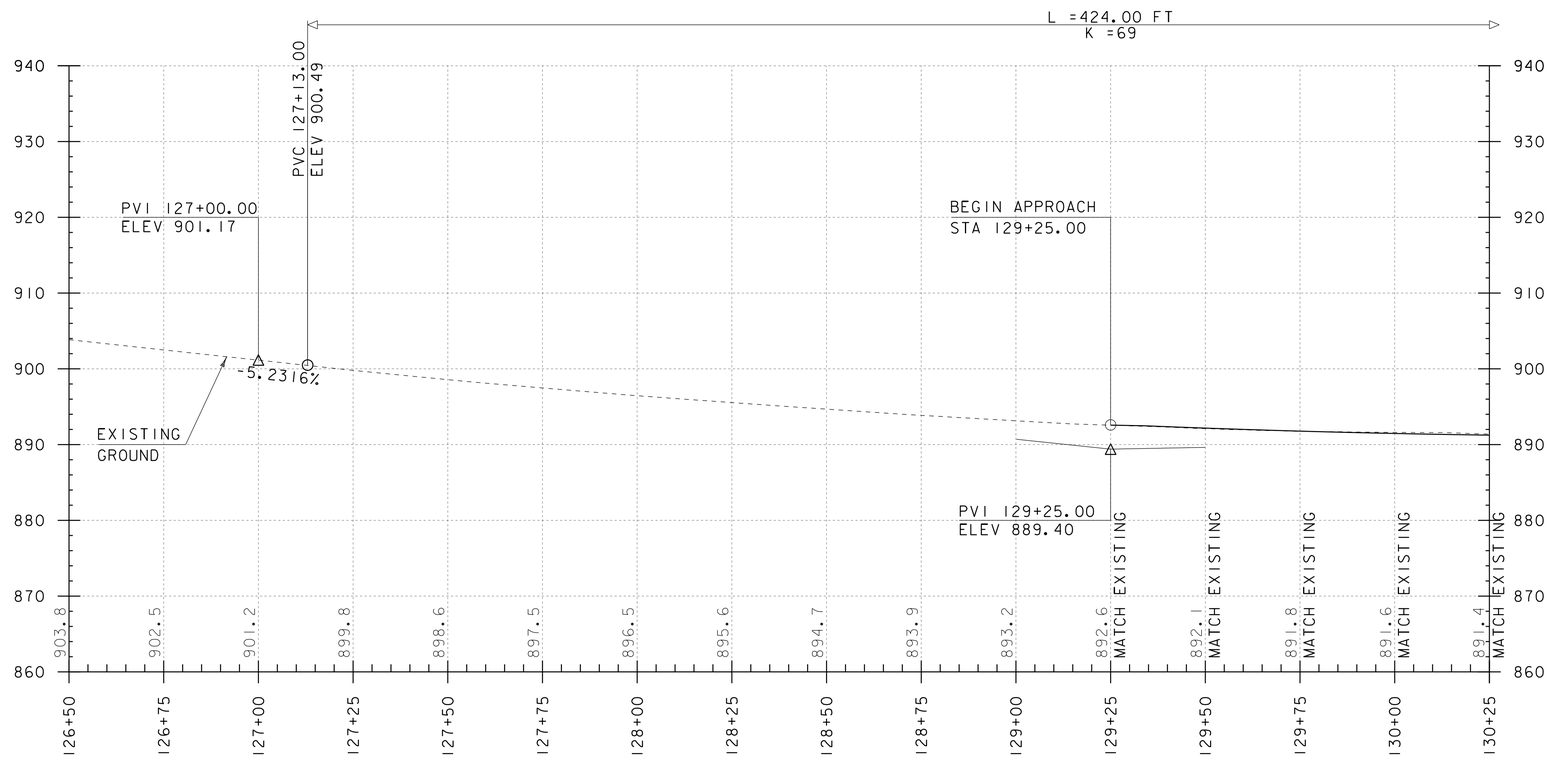

MAINLINE PROFILE - 1
STA 126+50 - 130+25

THE GRADES SHOWN TO THE NEAREST TENTH ARE THE ORIGINAL GROUND ELEVATIONS ALONG THE PROPOSED ALIGNMENT.

THE GRADES SHOWN TO THE NEAREST HUNDREDTH ARE THE FINISH GRADES ALONG THE PROPOSED ALIGNMENT.

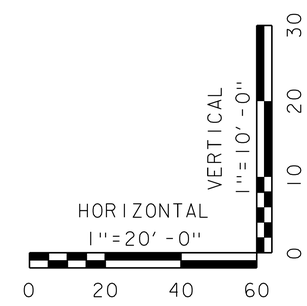

PROJECT NAME: PITTSFIELD	
PROJECT NUMBER: ER BRF 022-1(23)	
FILE NAME: s86e060pro.dgn	PLOT DATE: 18-SEP-2013
PROJECT LEADER: K. HIGGINS	DRAWN BY: J. GRIGAS
DESIGNED BY: J. SALVATORI	CHECKED BY: J. SALVATORI
MAINLINE PROFILE 1	SHEET 13 OF 67

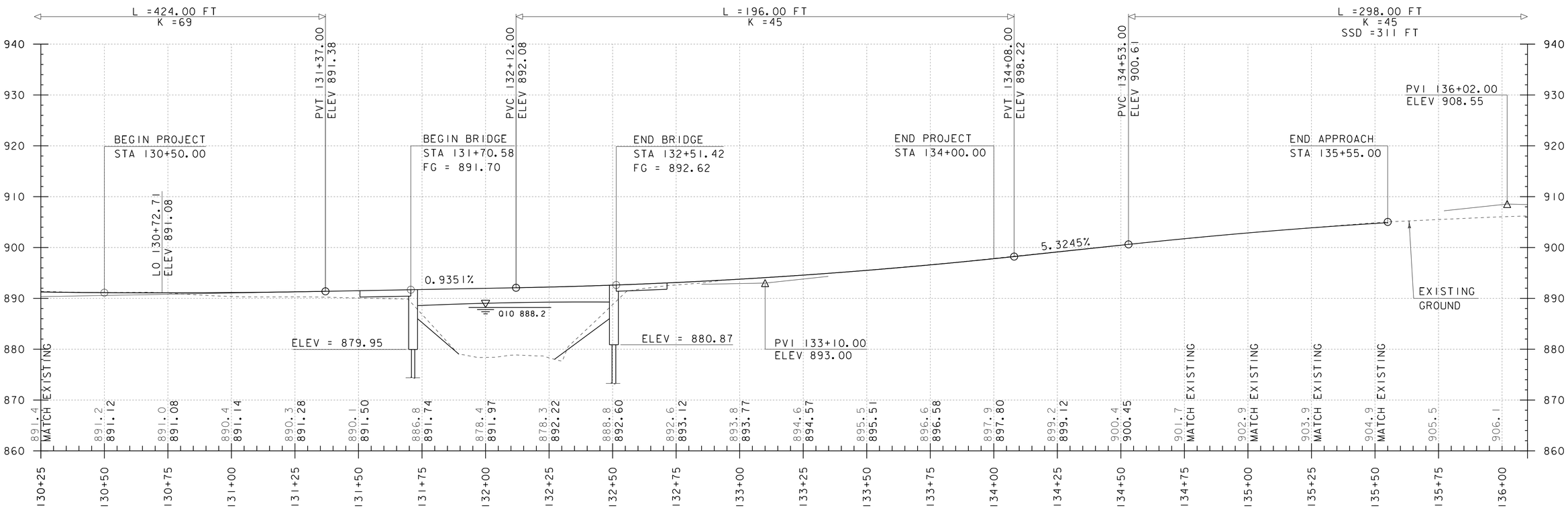

MAINLINE PROFILE - 2
STA 130+25 - 136+00

THE GRADES SHOWN TO THE NEAREST TENTH ARE THE ORIGINAL GROUND ELEVATIONS ALONG THE PROPOSED ALIGNMENT.

THE GRADES SHOWN TO THE NEAREST HUNDREDTH ARE THE FINISH GRADES ALONG THE PROPOSED ALIGNMENT.

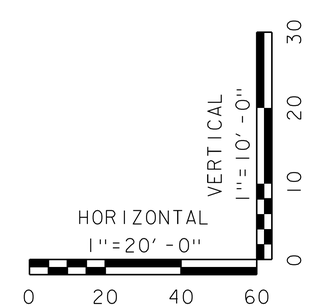

PROJECT NAME: PITTSFIELD	
PROJECT NUMBER: ER BRF 022-1(23)	
FILE NAME: s86e060pro.dgn	PLOT DATE: 18-SEP-2013
PROJECT LEADER: K. HIGGINS	DRAWN BY: J. GRIGAS
DESIGNED BY: J. SALVATORI	CHECKED BY: J. SALVATORI
MAINLINE PROFILE 2	SHEET 14 OF 67

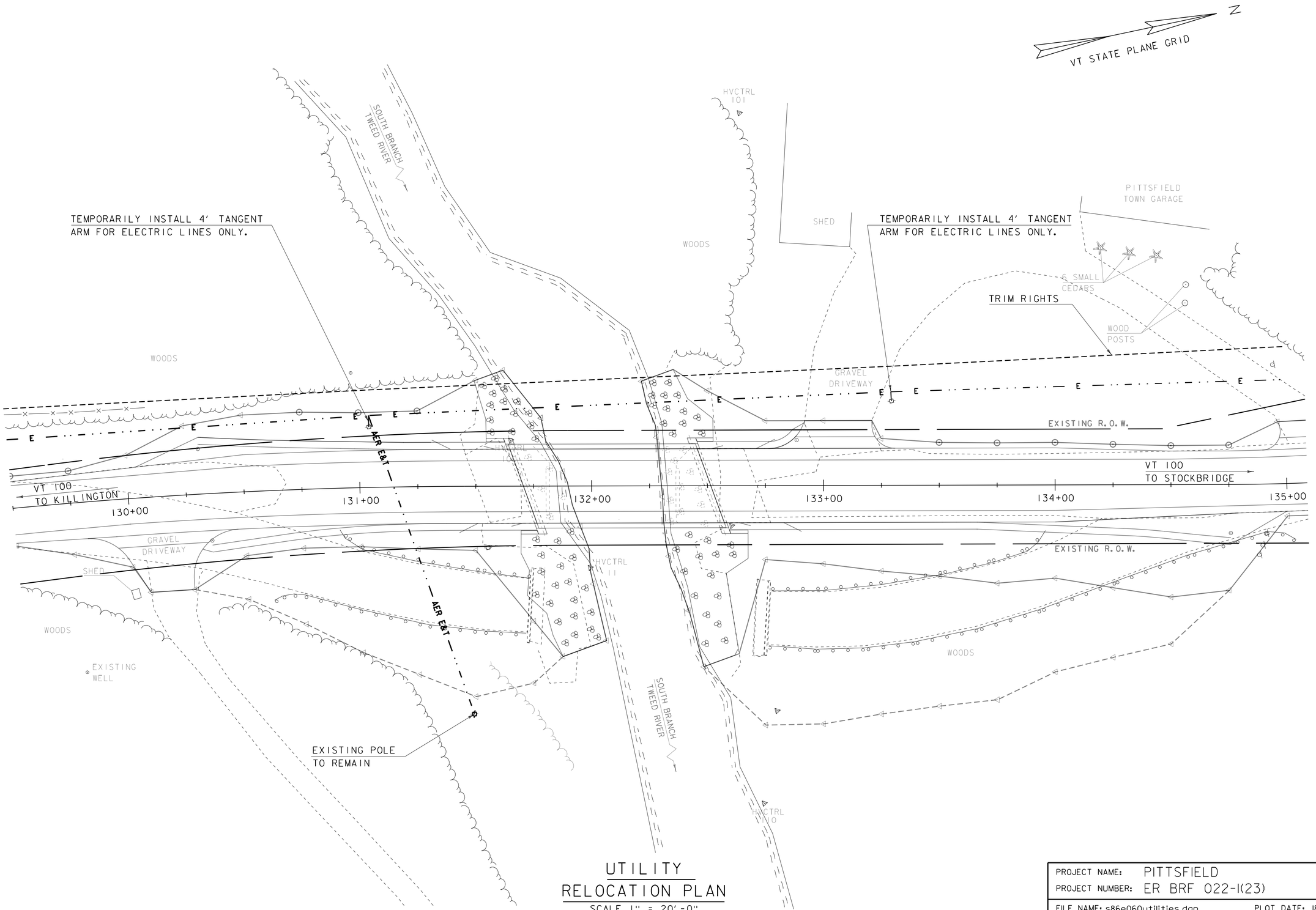

UTILITY RELOCATION PLAN

SCALE 1" = 20'-0"

20 0 20

PROJECT NAME: PITTSFIELD	
PROJECT NUMBER: ER BRF 022-1(23)	
FILE NAME: s86e060utilities.dgn	PLOT DATE: 18-SEP-2013
PROJECT LEADER: K. HIGGINS	DRAWN BY: K. FRIEDLAND
DESIGNED BY: J. SALVATORI	CHECKED BY: J. SALVATORI
UTILITY RELOCATION PLAN	SHEET 15 OF 67

4" WHITE LINE
STA 129+25.00 - STA 129+50.00 LT/RT

4" YELLOW LINE (DOUBLE)
STA 129+25.00 - STA 129+50.00 ℄

N
VT STATE PLANE GRID

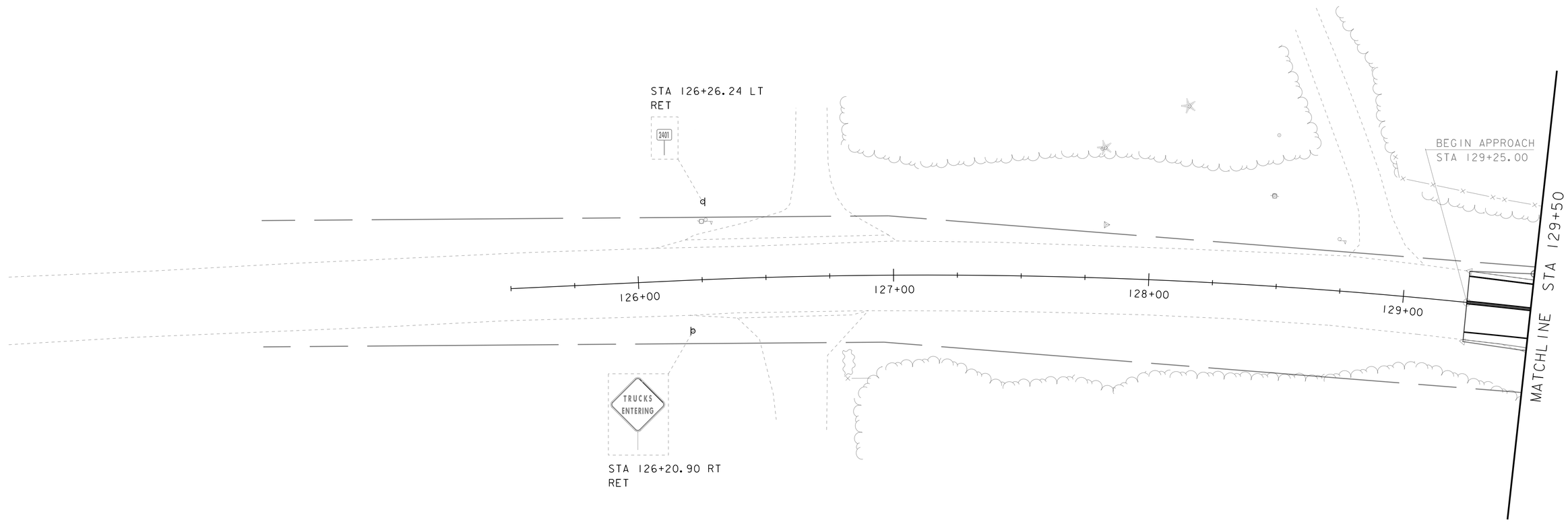

NOTE:
ADJUST NEW CENTERLINE AND EDGE LINES TO MATCH EXISTING LINES AT BEGIN/END APPROACH

SIGN & PAVEMENT MARKINGS SHEET 1

SCALE 1" = 20'-0"
20 0 20

SIGN LEGEND

N = NEW
R = REMOVE
RET = RETAIN

PROJECT NAME: PITTSFIELD
PROJECT NUMBER: ER BRF 022-1(23)

FILE NAME: s86e060sign.dgn
PROJECT LEADER: K. HIGGINS
DESIGNED BY: J. SALVATORI
SIGN & LINE STRIPING SHEET 1

PLOT DATE: 18-SEP-2013
DRAWN BY: K. FRIEDLAND
CHECKED BY: J. SALVATORI
SHEET 16 OF 67

MILEMARKER, STATION, OR SIGN NUMBER	SIGN LEGEND	SIGN DIMENSIONS WIDTH (in)	SIGN DIMENSIONS HEIGHT (in)	NEW SIGN "A"	EXIST POST RETAIN	EXIST POST SALVAGE	NEW SIGN POSTS NO. OF POSTS	SQUARE STEEL (in) 2.0 lb/ft 2.16	2.0 lb/ft 2.42	2.5 lb/ft 3.35	ANCHOR	SLEEVE	REMARKS	SHS	SIGN DETAIL DETAIL ON SHEET NUMBER	SIGN DETAIL STD. SHEET NUMBER
130+34.24 RT	River View Trail PVT	62	12	5.17			2		30		X		D3-1		SEE THIS SHEET	
131+48.00 RT.	BRIDGE 124 VT 100	6	8	0.33			1	10			X		VD-701			E-134
132+66.00 LT.	BRIDGE 124 VT 100	6	8	0.33			1	10			X		VD-701			E-134
134+90.70 RT.		36	36	9.00			2		30		X			S3-1 (FYG)		SHS
								FT 20	FT 60	FT		EA				
TOTALS				SF 14.83				FT 80								

FINAL POST LENGTHS ARE TO BE DETERMINED IN THE FIELD. POST SIZES ARE COMPUTED BASED ON INFORMATION FURNISHED ON THE STANDARD SHEETS AND THE VTRANS "SIGN POST DESIGN GUIDELINE."

SHS = STANDARD HIGHWAY SIGNS (MUTCD)

4" WHITE LINE
STA 129+50.00 - STA 135+00.00 LT/RT

4" YELLOW LINE (DOUBLE)
STA 129+50.00 - STA 135+00.00 ℄

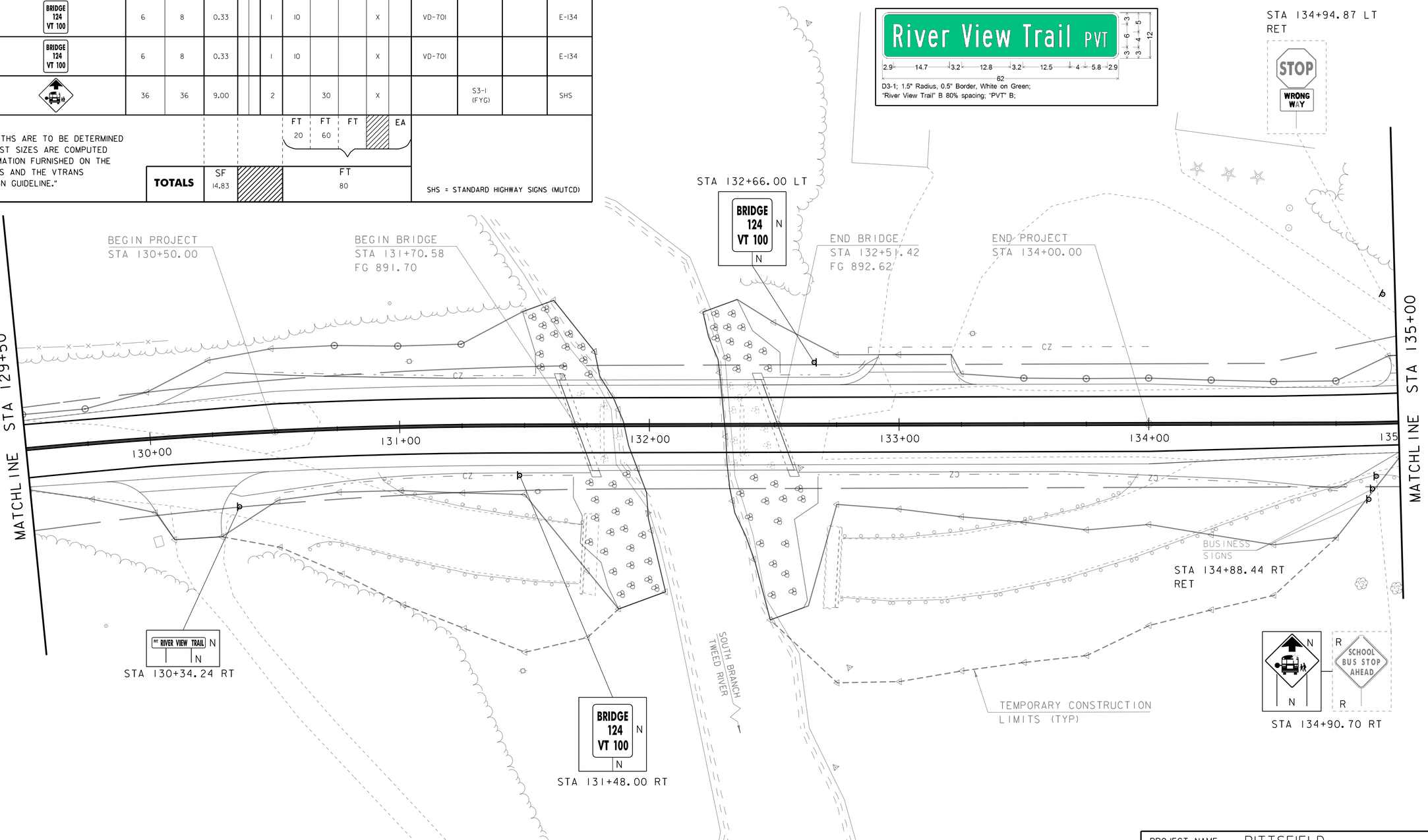

SIGN & PAVEMENT MARKINGS SHEET 2

SCALE 1" = 20'-0"
20 0 20

SIGN LEGEND

N = NEW
R = REMOVE
RET = RETAIN

PROJECT NAME: PITTSFIELD
PROJECT NUMBER: ER BRF 022-1(23)

FILE NAME: s86e060sign.dgn
PROJECT LEADER: K. HIGGINS
DESIGNED BY: J. SALVATORI
SIGN & LINE STRIPING SHEET 2

PLOT DATE: 02-OCT-2013
DRAWN BY: K. FRIEDLAND
CHECKED BY: J. SALVATORI
SHEET 17 OF 67

4" WHITE LINE
STA 135+00.00 - STA 135+55.00 LT/RT

4" YELLOW LINE (DOUBLE)
STA 135+00.00 - STA 135+55.00 ℄

VT STATE PLANE GRID

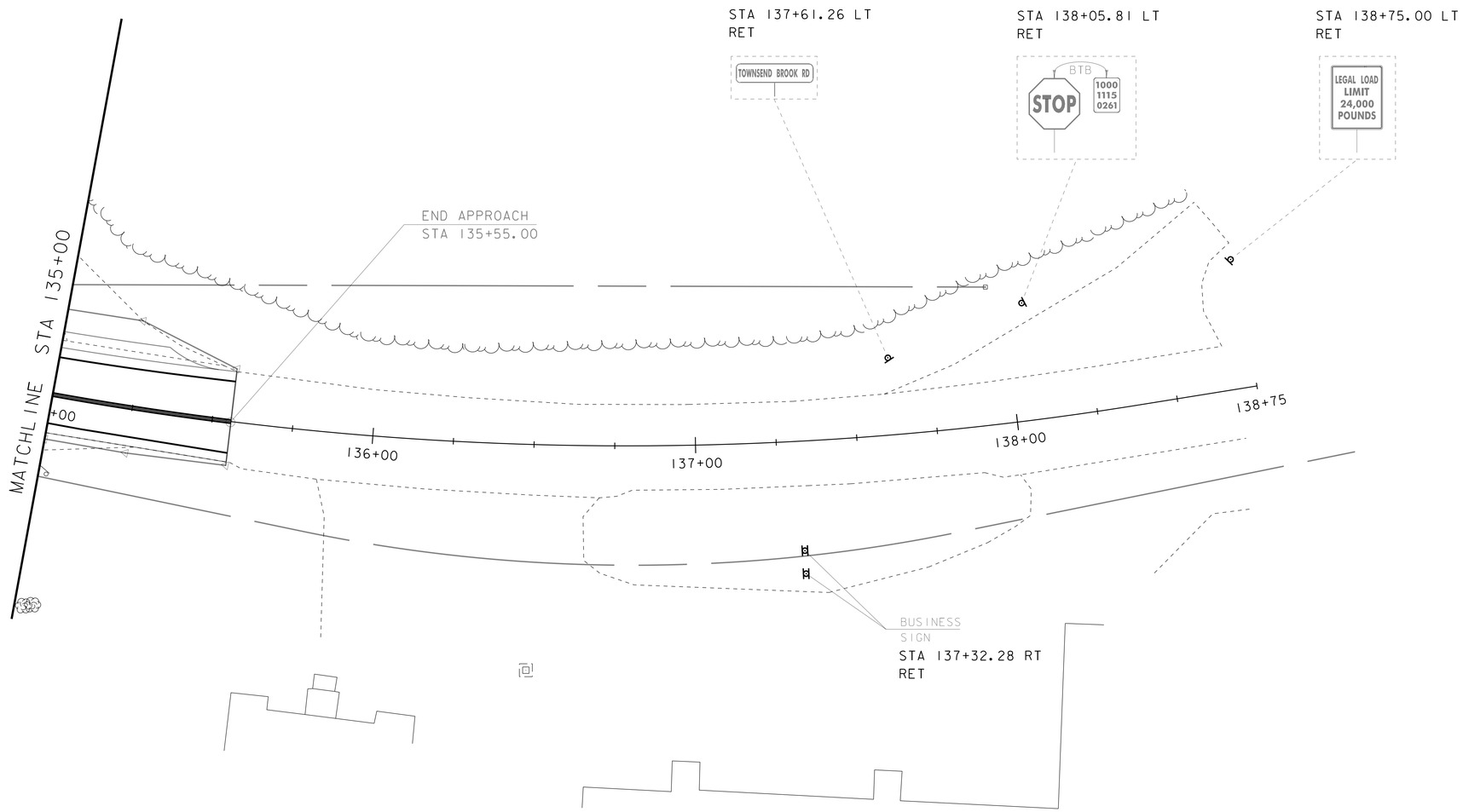

NOTE:
ADJUST NEW CENTERLINE AND EDGE LINES TO MATCH EXISTING LINES AT BEGIN/END APPROACH

SIGN & PAVEMENT MARKINGS SHEET 3

SCALE 1" = 20'-0"
20 0 20

SIGN LEGEND

N = NEW
R = REMOVE
RET = RETAIN

PROJECT NAME: PITTSFIELD
PROJECT NUMBER: ER BRF 022-1(23)

FILE NAME: s86e060sign.dgn
PROJECT LEADER: K. HIGGINS
DESIGNED BY: J. SALVATORI
SIGN & LINE STRIPING SHEET 3

PLOT DATE: 18-SEP-2013
DRAWN BY: K. FRIEDLAND
CHECKED BY: J. SALVATORI
SHEET 18 OF 67

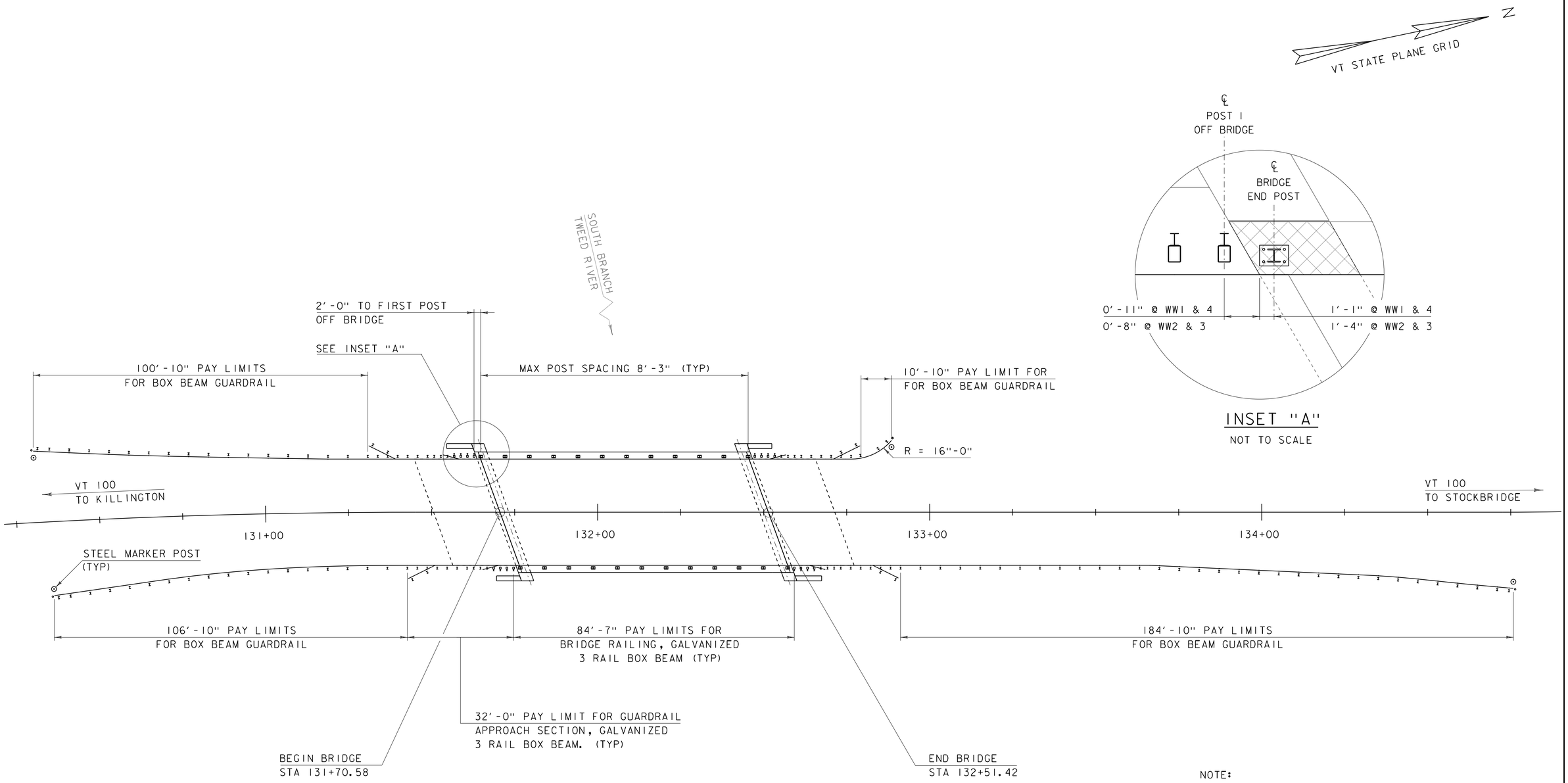

RAIL LAYOUT

NOT TO SCALE

NOTE:

1. SEE STANDARDS G-1B, G-4, S364A, S-364B, S364C AND S-364D FOR FURTHER DETAILS.
2. ANCHOR BOLT ASSEMBLY FOR BRIDGE END POST SHALL BE CAST IN CLOSURE POUR.
3. STEEL MARKER POSTS SHALL BE INCIDENTAL TO ITEM 621.30 BOX BEAM GUARD RAIL

PROJECT NAME: PITTSFIELD	
PROJECT NUMBER: ER BRF 022-1(23)	
FILE NAME: s86e060rail.dgn	PLOT DATE: 18-SEP-2013
PROJECT LEADER: K. HIGGINS	DRAWN BY: K. FRIEDLAND
DESIGNED BY: J. GRIGAS	CHECKED BY: J. SALVATORI
RAIL LAYOUT	SHEET 19 OF 67

SOIL CLASSIFICATION

AASHTO	
A1	Gravel and Sand
A3	Fine Sand
A2	Silty or Clayey Gravel and Sand
A4	Silty Soil - Low Compressibility
A5	Silty Soil - Highly Compressible
A6	Clayey Soil - Low Compressibility
A7	Clayey Soil - Highly Compressible

ROCK QUALITY DESIGNATION

R.Q.D. (%)	ROCK DESCRIPTION
<25	Very Poor
25 to 50	Poor
51 to 75	Fair
76 to 90	Good
>90	Excellent

SHEAR STRENGTH

UNDRAINED SHEAR STRENGTH IN P.S.F.	CONSISTENCY
<250	Very Soft
250-500	Soft
500-1000	Med. Stiff
1000-2000	Stiff
2000-4000	Very Stiff
>4000	Hard

CORRELATION GUIDE OF "N" TO DENSITY/CONSISTENCY

DENSITY (GRANULAR SOILS)		CONSISTENCY (COHESIVE SOILS)	
N	DESCRIPTIVE TERM	N	DESCRIPTIVE TERM
<5	Very Loose	<2	Very Soft
5-10	Loose	2-4	Soft
11-24	Med. Dense	5-8	Med. Stiff
25-50	Dense	9-15	Stiff
>50	Very Dense	16-30	Very Stiff
		31-60	Hard
		>60	Very Hard

COMMONLY USED SYMBOLS

▼	Water Elevation
⊗	Standard Penetration Boring
⊕	Auger Boring
⊙	Rod Sounding
S	Sample
N	Standard Penetration Test Blow Count Per Foot For: 2" O.D. Sampler 1 3/8" I.D. Sampler Hammer Weight Of 140 Lbs. Hammer Fall Of 30"
VS	Field Vane Shear Test
US	Undisturbed Soil Sample
B	Blast
DC	Diamond Core
MD	Mud Drill
WA	Wash Ahead
HSA	Hollow Stem Auger
AX	Core Size 1 1/8"
BX	Core Size 1 5/8"
NX	Core Size 2 1/8"
M	Double Tube Core Barrel Used
LL	Liquid Limit
PL	Plastic Limit
PI	Plasticity Index
NP	Non Plastic
w	Moisture Content (Dry Wgt. Basis)
D	Dry
M	Moist
MTW	Moist To Wet
W	Wet
Sat	Saturated
Bo	Boulder
Gr	Gravel
Sa	Sand
Si	Silt
Cl	Clay
HP	Hardpan
Le	Ledge
NLTD	No Ledge To Depth
CNPF	Can Not Penetrate Further
TLOB	Top of Ledge Or Boulder
NR	No Recovery
Rec.	Recovery
%Rec.	Percent Recovery
RQD	Rock Quality Designation
CBR	California Bearing Ratio
<	Less Than
>	Greater Than
R	Refusal (N > 100)
VTSPG	NAD83 - See Note 7

COLOR

blk	Black	pnk	Pink
bl	Blue	pu	Purple
brn	Brown	rd	Red
dk	Dark	tn	Tan
gry	Gray	wh	White
gn	Green	yel	Yellow
lt	Light	mltc	Multicolored
or	Orange		

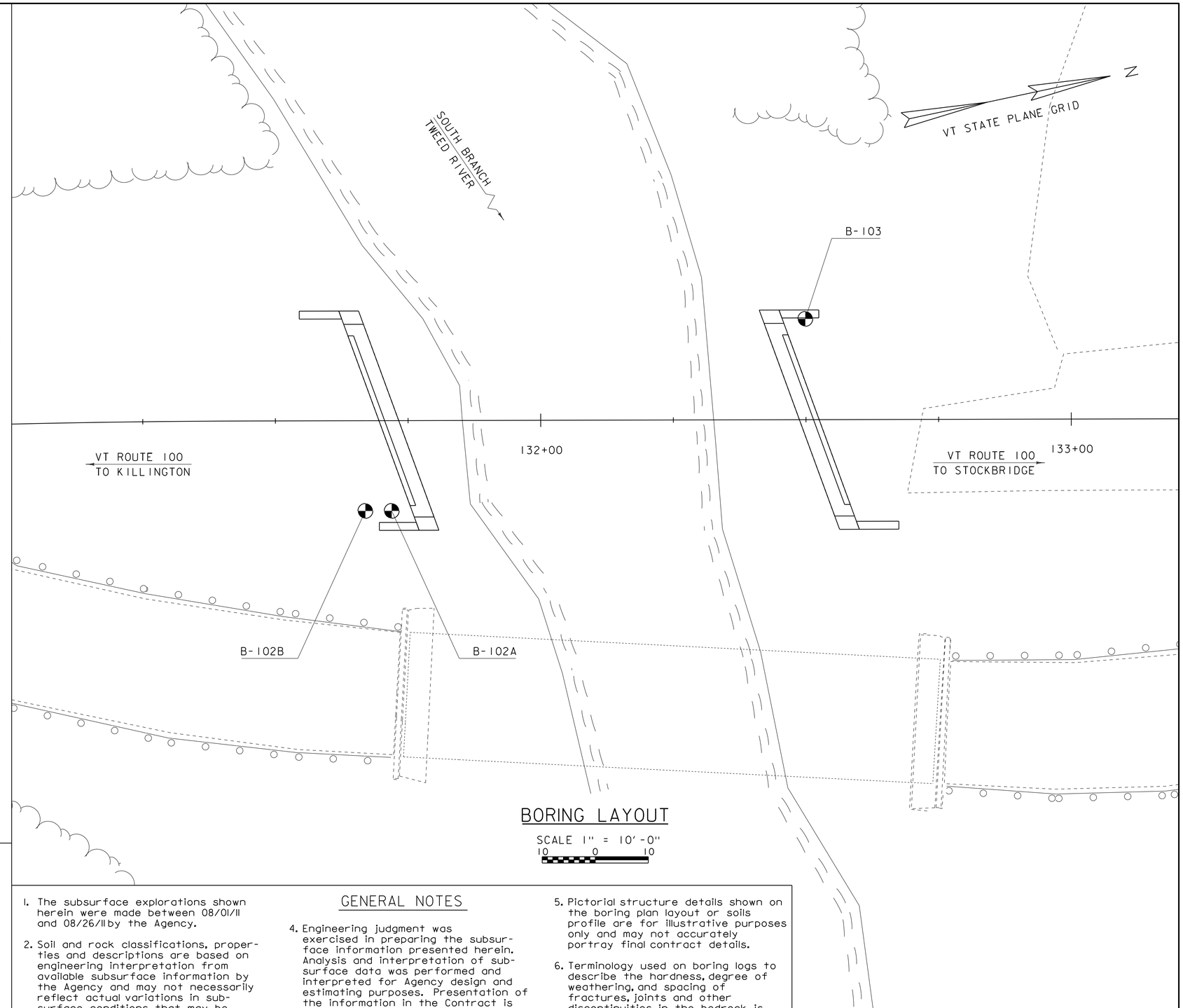

BORING LAYOUT

SCALE 1" = 10'-0"
10 0 10

DEFINITIONS (AASHTO)

BEDROCK (LEDGE) - Rock in its native location of indefinite thickness.

BOULDER - A rock fragment with an average dimension > 12 inches.

COBBLE - Rock fragments with an average dimension between 3 and 12 inches.

GRAVEL - Rounded particles of rock < 3" and > 0.0787" (#10 sieve).

SAND - Particles of rock < 0.0787" (#10 sieve) and > 0.0029" (#200 sieve).

SILT - Soil < 0.0029" (#200 sieve), non or slightly plastic and exhibits no strength when air-dried.

CLAY - Fine grained soil, exhibits plasticity when moist and considerable strength when air-dried.

VARVED - Alternate layers of silt and clay.

HARDPAN - Extremely dense soil, cemented layer, not softened when wet.

MUCK - Soft organic soil (containing > 10% organic material.

MOISTURE CONTENT - Weight of water divided by dry weight of soil.

FLOWING SAND - Granular soil so saturated (loose) that it flows into drill casing during extraction of wash rod.

STRIKE - Angle from magnetic north to line of intersection of bed with a horizontal plane.

DIP - Inclination of bed with a horizontal plane.

GENERAL NOTES

1. The subsurface explorations shown herein were made between 08/01/11 and 08/26/11 by the Agency.
2. Soil and rock classifications, properties and descriptions are based on engineering interpretation from available subsurface information by the Agency and may not necessarily reflect actual variations in subsurface conditions that may be encountered between individual boring or sample locations.
3. Observed water levels and/or conditions indicated are as recorded at the time of exploration and may vary according to the prevailing rainfall, methods of exploration and other factors.
4. Engineering judgment was exercised in preparing the subsurface information presented herein. Analysis and interpretation of subsurface data was performed and interpreted for Agency design and estimating purposes. Presentation of the information in the Contract is intended to provide the Contractor access to the same data available to the Agency. The subsurface information is presented in good faith and is not intended as a substitute for personal investigation, independent interpretation, independent analysis or judgment by the Contractor.
5. Pictorial structure details shown on the boring plan layout or soils profile are for illustrative purposes only and may not accurately portray final contract details.
6. Terminology used on boring logs to describe the hardness, degree of weathering, and spacing of fractures, joints and other discontinuities in the bedrock is defined in the AASHTO Manual on Subsurface Investigations, 1988.
7. Northing and Easting coordinates are shown in Vermont State Plane Grid North American Datum 1983 in meters and survey feet.

PROJECT NAME: PITTSFIELD
PROJECT NUMBER: ER BRF 022-1(23)

FILE NAME: s00C162bor.dgn
PROJECT LEADER: K. HIGGINS
DESIGNED BY: J. GRIGAS
BORING LAYOUT SHEET

PLOT DATE: 18-SEP-2013
DRAWN BY: J. SALVATORI
CHECKED BY: J. GRIGAS
SHEET 20 OF 67

STATE OF VERMONT
AGENCY OF TRANSPORTATION
MATERIALS & RESEARCH SECTION
SUBSURFACE INFORMATION

BORING LOG

PITTSFIELD
BRF 022-1(23)
VT-100 BR-124

Boring No.: B-102 A
Page No.: 1 of 2
Pin No.: 86E060
Checked By: CEE

Boring Crew: GARROW, SALISBURY
Date Started: 8/09/11 Date Finished: 8/18/11
VTSPG NAD83: N 456919.82 ft E 1555733.68 ft
Station: 131+75 Offset: 17.00
Ground Elevation: 890.0 ft

	Casing	Sampler
Type:	WB	SS
I.D.:	4 in	1.5 in
Hammer Wt:	N.A.	140 lb.
Hammer Fall:	N.A.	30 in.
Hammer/Rod Type:	Auto/AWJ	
Rig:	CME 55 TRACK	CE = 1.46

Groundwater Observations

Date	Depth (ft)	Notes
08/11/11	14.0	AM
08/11/11	15.0	End of Day

Depth (ft)	Strata (1)	CLASSIFICATION OF MATERIALS (Description)	Blows/6" (N Value)	Moisture Content %	Gravel %	Sand %	Fines %
		A-2-4, GrSa, brn, Moist, Rec. = 0.5 ft	1-1-2-3 (3)	13.3	20.9	64.2	14.9
		A-1-a, SaGr, brn, Moist, Rec. = 0.7 ft	3-3-4-4 (7)	8.9	54.5	36.7	8.8
5		A-1-a, SaGr, brn, Moist, Rec. = 0.7 ft	3-9-5-6 (14)	8.4	56.3	36.2	7.5
		A-1-b, SaGr, brn, Moist, Rec. = 0.5 ft	1-5-6-7 (11)	11.6	41.3	39.9	18.8
		Field Note:, No Recovery	3-2-3-3 (5)				
BOTTOM OF PILE CAP AB#1 ELEV. 879.95 10		A-1-a, SaGr, grn-brn, Moist, Rec. = 1.2 ft	17-12-9-9 (21)	10.3	64.7	27.6	7.7
		A-1-a, SaGr, grn-brn, MTW, Rec. = 1.0 ft	9-7-6-5 (13)	15.4	56.5	35.1	8.4
15		A-1-b, SaGr, grn-brn, MTW, Rec. = 0.3 ft, Stone in end of sampler.	7-5-3-7 (8)	13.5	49.7	41.4	8.9
		A-1-b, SaGr, grn-brn, MTW, Rec. = 1.2 ft	5-16-14-14 (30)	15.9	53.8	32.3	13.9
		A-1-a, SaGr, brn, MTW, Rec. = 1.0 ft	10-11-8-11 (19)	10.7	61.0	28.4	10.6
20		A-1-a, SaGr, gry-brn, MTW, Rec. = 0.7 ft	10-9-8-6 (17)	14.4	62.3	27.8	9.9
		A-1-a, SaGr, brn, MTW, Rec. = 1.0 ft	11-7-8-9 (15)	11.8	68.3	21.5	10.2
25		A-1-a, SaGr, brn, MTW, Rec. = 1.0 ft	5-13-11-9 (24)	11.8	68.6	20.9	10.5
		A-1-b, SaGr, gry, MTW, Rec. = 1.0 ft	9-16-14-16 (30)	12.6	52.9	31.9	15.2
30							
		A-1-a, Gr, gry, Moist, Rec. = 0.7 ft	4-6-6-12 (12)	5.4	84.1	12.4	3.5

Notes:
1. Stratification lines represent approximate boundary between material types. Transition may be gradual.
2. N Values have not been corrected for hammer energy. CE is the hammer energy correction factor.
3. Water level readings have been made at times and under conditions stated. Fluctuations of groundwater may occur due to other factors than those present at the time measurements were made.

BORING LOG 2 PITTSFIELD BRF 022-1(23).GPJ VERMONT AOT.GDT 9/14/11

STATE OF VERMONT
AGENCY OF TRANSPORTATION
MATERIALS & RESEARCH SECTION
SUBSURFACE INFORMATION

BORING LOG

PITTSFIELD
BRF 022-1(23)
VT-100 BR-124

Boring No.: B-102 A
Page No.: 2 of 2
Pin No.: 86E060
Checked By: CEE

Boring Crew: GARROW, SALISBURY
Date Started: 8/09/11 Date Finished: 8/18/11
VTSPG NAD83: N 456919.82 ft E 1555733.68 ft
Station: 131+75 Offset: 17.00
Ground Elevation: 890.0 ft

	Casing	Sampler
Type:	WB	SS
I.D.:	4 in	1.5 in
Hammer Wt:	N.A.	140 lb.
Hammer Fall:	N.A.	30 in.
Hammer/Rod Type:	Auto/AWJ	
Rig:	CME 55 TRACK	CE = 1.46

Groundwater Observations

Date	Depth (ft)	Notes
08/11/11	14.0	AM
08/11/11	15.0	End of Day

Depth (ft)	Strata (1)	CLASSIFICATION OF MATERIALS (Description)	Blows/6" (N Value)	Moisture Content %	Gravel %	Sand %	Fines %
		Field Note:, Sleaved casing down to 3.0 inch at 35.0 feet					
		Field Note:, BXDC, Cleaned out casing. Appears to be Gravely Sand					
		A-1-b, SiSaGr, grn-gry, Moist, Rec. = 1.0 ft	12-26-26-24 (52)	10.1	40.9	37.8	21.3
		Field Note:, BXDC, Appears to be Gravely Sand					
40							
		A-1-a, SaGr, grn-gry, Moist, Rec. = 0.7 ft	10-9-5-4 (14)	8.1	68.9	21.8	9.3
45							
		Field Note:, BXDC, Cobble					
		A-1-a, SaGr, gry, Moist, Rec. = 1.0 ft	6-13-5-6 (18)	10.2	58.8	31.9	9.3
50							
		Field Note:, BXDC, Cobble					
		A-1-a, SaGr, brn, Moist, Rec. = 0.9 ft	3-3-3-10 (6)	11.5	52.5	39.6	7.9
55							
		A-1-a, SaGr, brn, Moist, Rec. = 1.2 ft	14-13-13-11 (26)	9.4	56.9	30.3	12.8
60							
		Field Note:, BXDC, Gravel					
		Hole stopped @ 62.0 ft Due to casing breaking off.					
65		Remarks: 1. Drillers stopped driling this hole because the casing broke off. 2. About five feet of three inch casing remains in the ground. 3. Drillers setup beside this hole and continued drilling. (B-102B)					

Notes:
1. Stratification lines represent approximate boundary between material types. Transition may be gradual.
2. N Values have not been corrected for hammer energy. CE is the hammer energy correction factor.
3. Water level readings have been made at times and under conditions stated. Fluctuations of groundwater may occur due to other factors than those present at the time measurements were made.

BORING LOG 2 PITTSFIELD BRF 022-1(23).GPJ VERMONT AOT.GDT 9/14/11

PROJECT NAME: PITTSFIELD
PROJECT NUMBER: ER BRF 022-1(23)

FILE NAME: s00C162bor.dgn
PROJECT LEADER: K. HIGGINS
DESIGNED BY: J. GRIGAS
BORING LOGS 1

PLOT DATE: 18-SEP-2013
DRAWN BY: J. SALVATORI
CHECKED BY: J. GRIGAS
SHEET 21 OF 67

STATE OF VERMONT
AGENCY OF TRANSPORTATION
MATERIALS & RESEARCH SECTION
SUBSURFACE INFORMATION

BORING LOG

PITTSFIELD
BRF 022-1(23)
VT-100 BR-124

Boring No.: B-102 B
Page No.: 1 of 2
Pin No.: 86E060
Checked By: CEE

Boring Crew: GARROW, SALISBURY
Date Started: 8/23/11 Date Finished: 8/26/11
VTSPG NAD83: N 456914.94 ft E 1555732.65 ft
Station: 131+70 Offset: 17.00
Ground Elevation: 890.0 ft

	Casing	Sampler
Type:	WB	SS
I.D.:	4 in	1.5 in
Hammer Wt:	N.A.	140 lb.
Hammer Fall:	N.A.	30 in.
Hammer/Rod Type:	Auto/AWJ	
Rig:	CME 55 TRACK	CE = 1.46

Groundwater Observations

Date	Depth (ft)	Notes
08/23/11	14.2	
08/26/11	14.5	

Depth (ft)	Strata (1)	CLASSIFICATION OF MATERIALS (Description)	Run (Dip deg.)	Core Rec. % (RQD %)	Drill Rate minutes/ft	Blows/6" (N Value)	Moisture Content %	Gravel %	Sand %	Fines %
		Field Note:, Cobble								
		Field Note:, Advanced casing to 39.5 feet								
5										
10										
15										
20										
25										
30										
35										
		Field Note:, BXDC, Boulder								
40		Field Note:, Sleaved down to a 3.0 inch casing								

BOTTOM OF
PILE CAP AB#1
ELEV. 879.95

Notes:
1. Stratification lines represent approximate boundary between material types. Transition may be gradual.
2. N Values have not been corrected for hammer energy. CE is the hammer energy correction factor.
3. Water level readings have been made at times and under conditions stated. Fluctuations of groundwater may occur due to other factors than those present at the time measurements were made.

BORING LOG 2 PITTSFIELD BRF 022-1(23).GPJ VERMONT AOT.GDT 9/14/11

STATE OF VERMONT
AGENCY OF TRANSPORTATION
MATERIALS & RESEARCH SECTION
SUBSURFACE INFORMATION

BORING LOG

PITTSFIELD
BRF 022-1(23)
VT-100 BR-124

Boring No.: B-102 B
Page No.: 2 of 2
Pin No.: 86E060
Checked By: CEE

Boring Crew: GARROW, SALISBURY
Date Started: 8/23/11 Date Finished: 8/26/11
VTSPG NAD83: N 456914.94 ft E 1555732.65 ft
Station: 131+70 Offset: 17.00
Ground Elevation: 890.0 ft

	Casing	Sampler
Type:	WB	SS
I.D.:	4 in	1.5 in
Hammer Wt:	N.A.	140 lb.
Hammer Fall:	N.A.	30 in.
Hammer/Rod Type:	Auto/AWJ	
Rig:	CME 55 TRACK	CE = 1.46

Groundwater Observations

Date	Depth (ft)	Notes
08/23/11	14.2	
08/26/11	14.5	

Depth (ft)	Strata (1)	CLASSIFICATION OF MATERIALS (Description)	Run (Dip deg.)	Core Rec. % (RQD %)	Drill Rate minutes/ft	Blows/6" (N Value)	Moisture Content %	Gravel %	Sand %	Fines %
		Field Note:, BXDC, Boulder & Cobbles								
50										
		Field Note:, BXDC, Cobbles								
55										
60										
		Visual Classification, Gravel with stone chips, brn-gry, Moist, Rec. = 0.3 ft, Insufficient sample for testing.				15-R@6.0"				
65										
		Field Note:, BXDC, Sa Gr A-1-b, GrSa (Stone chips), brn, Moist, Rec. = 0.3 ft, Results are from an inadequate size sample.				6-6-8-11 (14)	3.9	47.0	46.9	6.1
70										
		A-2-4, SiSa, brn, Moist, Rec. = 0.3 ft				5-6-12-11 (18)	18.9	9.9	61.9	28.2
75										
		A-1-a, Gr, gry, Moist, Rec. = 0.3 ft, Results are from an inadequate size sample. Lab Note: Sample was Gravel with broken rock.				R@6.0"	2.4	96.6	1.5	1.9
		77.6 ft - 82.6 ft, Gray-green, Sericite chlorite Schist, with calcite bands. Moderately hard, Unweathered, Very good rock, BXMDC, RMR = 89	1 (15)	100 (100)	10 8 5 5 5	Top of Bedrock @ 77.6 ft				
80										
		82.6 ft - 87.6 ft, Gray-green, Sericite chlorite Schist, with calcite bands. Moderately hard, Unweathered, Very good rock, BXMDC, RMR = 89	2 (15)	98 (100)	5 6 8 8 8					
85										
		Hole stopped @ 87.6 ft								

PILE TIP
EL 812.40

Notes:
1. Stratification lines represent approximate boundary between material types. Transition may be gradual.
2. N Values have not been corrected for hammer energy. CE is the hammer energy correction factor.
3. Water level readings have been made at times and under conditions stated. Fluctuations of groundwater may occur due to other factors than those present at the time measurements were made.

BORING LOG 2 PITTSFIELD BRF 022-1(23).GPJ VERMONT AOT.GDT 9/14/11

PROJECT NAME: PITTSFIELD
PROJECT NUMBER: ER BRF 022-1(23)

FILE NAME: s00C162bor.dgn
PROJECT LEADER: K. HIGGINS
DESIGNED BY: J. GRIGAS
BORING LOGS 2
PLOT DATE: 18-SEP-2013
DRAWN BY: J. SALVATORI
CHECKED BY: J. GRIGAS
SHEET 22 OF 67

STATE OF VERMONT
AGENCY OF TRANSPORTATION
MATERIALS & RESEARCH SECTION
SUBSURFACE INFORMATION

BORING LOG

PITTSFIELD
BRF 022-1(23)
VT-100 BR-124

Boring No.: B-103
Page No.: 1 of 2
Pin No.: 86E060
Checked By: CEE

Boring Crew: GARROW, SALISBURY
Date Started: 8/01/11 Date Finished: 8/04/11
VTSPG NAD83: N 457003.53 ft E 1555714.49 ft
Station: 132+53 Offset: -19.00
Ground Elevation: 891.5 ft

	Casing	Sampler
Type:	WB	SS
I.D.:	4 in	1.5 in
Hammer Wt:	N.A.	140 lb.
Hammer Fall:	N.A.	30 in.
Hammer/Rod Type:	Auto/AWJ	
Rig:	CME 55 TRACK	CE = 1.46

Groundwater Observations

Date	Depth (ft)	Notes
08/01/11	15.7	AM
08/04/11	16.0	AM

Depth (ft)	Strata (1)	CLASSIFICATION OF MATERIALS (Description)	Run (Dip deg.)	Core Rec. % (RQD %)	Drill Rate minutes/ft	Blows/6" (N Value)	Moisture Content %	Gravel %	Sand %	Fines %
		A-1-b, GrSa, brn, MTW, Rec. = 0.9 ft, Broken Rock was within sample.				WH-3-1-2 (4)	12.3	41.1	42.0	16.9
		A-1-b, GrSa, brn, MTW, Rec. = 0.7 ft, Broken Rock was within sample.				1-1-1-1 (2)	8.6	28.8	60.3	10.9
5		A-1-b, GrSa, brn, MTW, Rec. = 0.7 ft, Broken Rock was within sample.				WH-WH-2-3 (2)	9.8	40.8	49.1	10.1
		A-1-a, SaGr, brn, MTW, Rec. = 0.5 ft, Broken Rock was within sample.				5-5-5-3 (10)	5.6	61.8	30.5	7.7
		A-1-a, SaGr, brn, MTW, Rec. = 0.7 ft, Broken Rock was within sample.				2-2-3-9 (5)	4.9	70.1	23.6	6.3
10		A-1-b, SaGr, brn, MTW, Rec. = 1.0 ft, Broken Rock was within sample.				7-10-10-10 (20)	15.1	50.4	37.2	12.4
		A-1-a, SaGr, brn, MTW, Rec. = 0.5 ft, Broken Rock was within sample.				6-7-9-11 (16)	14.8	61.3	31.0	7.7
15		A-1-a, SaGr, brn, MTW, Rec. = 0.9 ft, Broken Rock was within sample.				9-15-10-11 (25)	11.0	61.7	25.8	12.5
		A-1-b, SaGr, brn, MTW, Rec. = 0.3 ft, Broken Rock was within sample.				11-11-9-10 (20)	22.1	44.2	39.8	16.0
		A-1-a, SaGr, brn, MTW, Rec. = 0.8 ft, Broken Rock was within sample.				5-10-10-10 (20)	12.9	58.6	32.4	9.0
20		A-1-b, GrSa, gry-brn, MTW, Rec. = 1.2 ft, Broken Rock was within sample.				26-10-9-28 (19)	11.5	40.0	42.9	17.1
		A-1-a, SaGr, brn-gry, MTW, Rec. = 0.7 ft, Broken Rock was within sample.				14-7-7-4 (14)	14.2	62.7	29.0	8.3
25		A-1-b, SaGr, brn, MTW, Rec. = 0.9 ft, Broken Rock was within sample.				5-8-15-27 (23)	11.5	49.5	32.8	17.7
		A-1-a, SaGr, gry-brn, MTW, Rec. = 1.0 ft, Broken Rock was within sample.				8-14-14-11 (28)	7.6	61.6	29.2	9.2
30										
		A-1-b, SaGr, gry, MTW, Rec. = 1.0 ft, Broken Rock was within sample.				15-15-16-17 (31)	9.3	55.3	31.1	13.6
35		Field Note:, Began Mud Drilling								
		A-1-a, SaGr, brn, MTW, Rec. = 0.7 ft				4-8-5-5 (13)	16.9	52.8	35.4	11.8
40										
		A-1-a, SaGr, brn, MTW, Rec. = 1.3 ft, Broken Rock was within sample.				17-20-13-13 (33)	12.0	56.8	30.1	13.1

BOTTOM OF PILE CAP AB#2 ELEV. 880.87

Notes:
1. Stratification lines represent approximate boundary between material types. Transition may be gradual.
2. N Values have not been corrected for hammer energy. CE is the hammer energy correction factor.
3. Water level readings have been made at times and under conditions stated. Fluctuations of groundwater may occur due to other factors than those present at the time measurements were made.

BORING LOG 2 PITTSFIELD BRF 022-1(23).GPJ VERMONT AOT.GDT 9/14/11

STATE OF VERMONT
AGENCY OF TRANSPORTATION
MATERIALS & RESEARCH SECTION
SUBSURFACE INFORMATION

BORING LOG

PITTSFIELD
BRF 022-1(23)
VT-100 BR-124

Boring No.: B-103
Page No.: 2 of 2
Pin No.: 86E060
Checked By: CEE

Boring Crew: GARROW, SALISBURY
Date Started: 8/01/11 Date Finished: 8/04/11
VTSPG NAD83: N 457003.53 ft E 1555714.49 ft
Station: 132+53 Offset: -19.00
Ground Elevation: 891.5 ft

	Casing	Sampler
Type:	WB	SS
I.D.:	4 in	1.5 in
Hammer Wt:	N.A.	140 lb.
Hammer Fall:	N.A.	30 in.
Hammer/Rod Type:	Auto/AWJ	
Rig:	CME 55 TRACK	CE = 1.46

Groundwater Observations

Date	Depth (ft)	Notes
08/01/11	15.7	AM
08/04/11	16.0	AM

Depth (ft)	Strata (1)	CLASSIFICATION OF MATERIALS (Description)	Run (Dip deg.)	Core Rec. % (RQD %)	Drill Rate minutes/ft	Blows/6" (N Value)	Moisture Content %	Gravel %	Sand %	Fines %
		A-1-a, Gr, brn, MTW, Rec. = 0.4 ft, Broken Rock was within sample.				12-18-19-16 (37)	14.0	71.8	19.5	8.7
50										
		A-1-a, Gr, brn, MTW, Rec. = 0.9 ft, Broken Rock was within sample.				15-35-32-30 (67)	5.0	86.1	9.2	4.7
55										
		Field Note:, NXDC, Boulder								
		A-1-a, SaGr, gry, MTW, Rec. = 1.0 ft				8-18-11-11 (29)	5.7	67.6	24.5	7.9
60		Field Note:, Sleaved casing down to 3 inch at 60.0f feet								
		A-1-a, Gr, gry, MTW, Rec. = 0.8 ft				3-6-5-5 (11)	8.0	76.3	16.6	7.1
65										
		A-1-a, SaGr, gry, MTW, Rec. = 0.8 ft				8-7-10-18 (17)	7.7	71.9	21.0	7.1
70										
		Field Note:, BXDC, Cobbles								
		A-2-4, SiGrSa, gry, Moist, Rec. = 0.9 ft				4-9-17-13 (26)	12.7	29.2	50.0	20.8
75										
		Field Note:, BXDC, Cobbles								
		77.3 ft - 78.3 ft, Boulders. BXDC	1		12					
		78.3 ft - 81.9 ft, Boulders. BXMDC	2		12 12 5 8					
80		81.9 ft - 83.3 ft, Gray-green, Sericite chlorite Schist, with calcite bands Moderately hard, Unweathered, Very good rock, BXMDC, RMR = 89	2 cont. (45)	97.5 (100)	10	Top of Bedrock @ 81.9 ft				
85		83.3 ft - 87.3 ft, Gray-green, Sericite chlorite Schist, with calcite bands Moderately hard, Unweathered, Very good rock, BXMDC, RMR = 89	3 (45)	100 (100)	12 10 10 13					
		Hole stopped @ 87.3 ft								

PILE TIP EL 809.60

Notes:
1. Stratification lines represent approximate boundary between material types. Transition may be gradual.
2. N Values have not been corrected for hammer energy. CE is the hammer energy correction factor.
3. Water level readings have been made at times and under conditions stated. Fluctuations of groundwater may occur due to other factors than those present at the time measurements were made.

BORING LOG 2 PITTSFIELD BRF 022-1(23).GPJ VERMONT AOT.GDT 9/14/11

PROJECT NAME: PITTSFIELD
PROJECT NUMBER: ER BRF 022-1(23)

FILE NAME: s00C162bor.dgn
PROJECT LEADER: K. HIGGINS
DESIGNED BY: J. GRIGAS
BORING LOGS 3

PLOT DATE: 18-SEP-2013
DRAWN BY: J. SALVATORI
CHECKED BY: J. GRIGAS
SHEET 23 OF 67

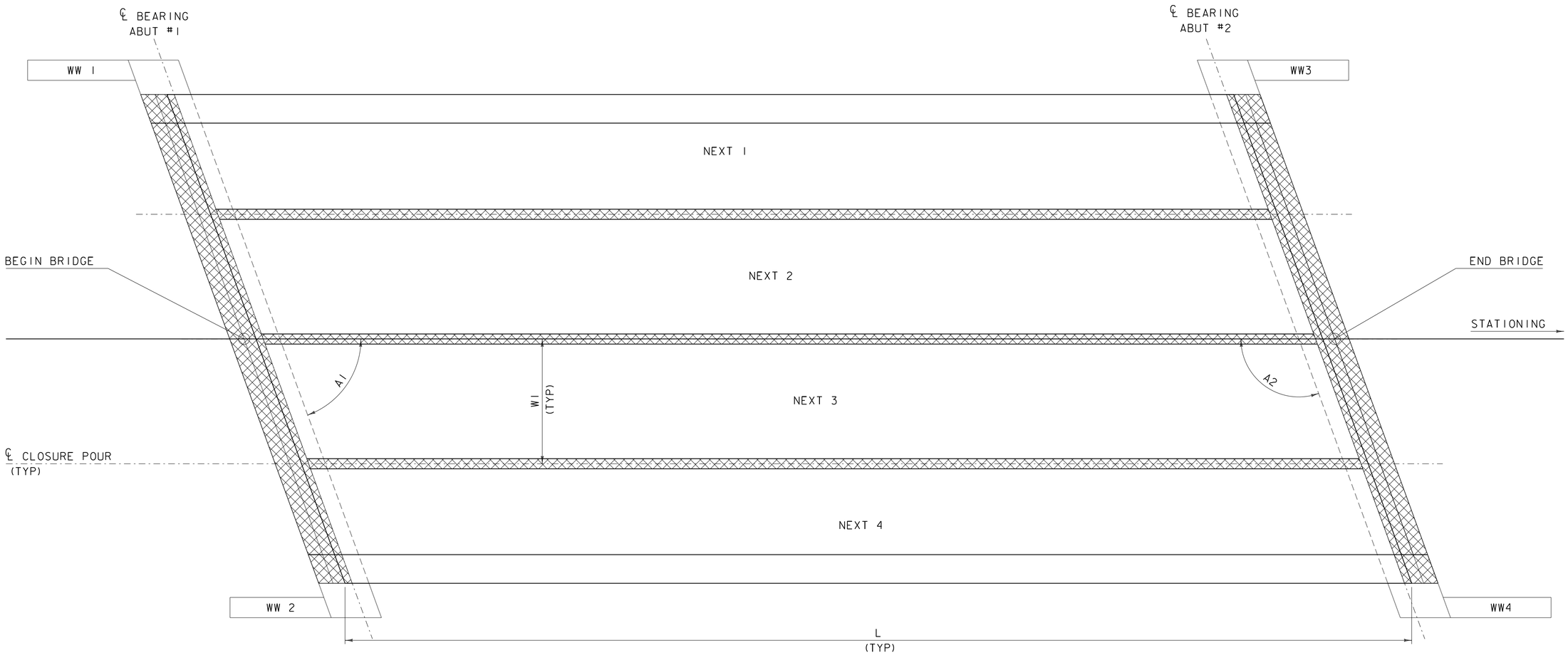

DECK PLAN

SCALE 1/4" = 1'-0"

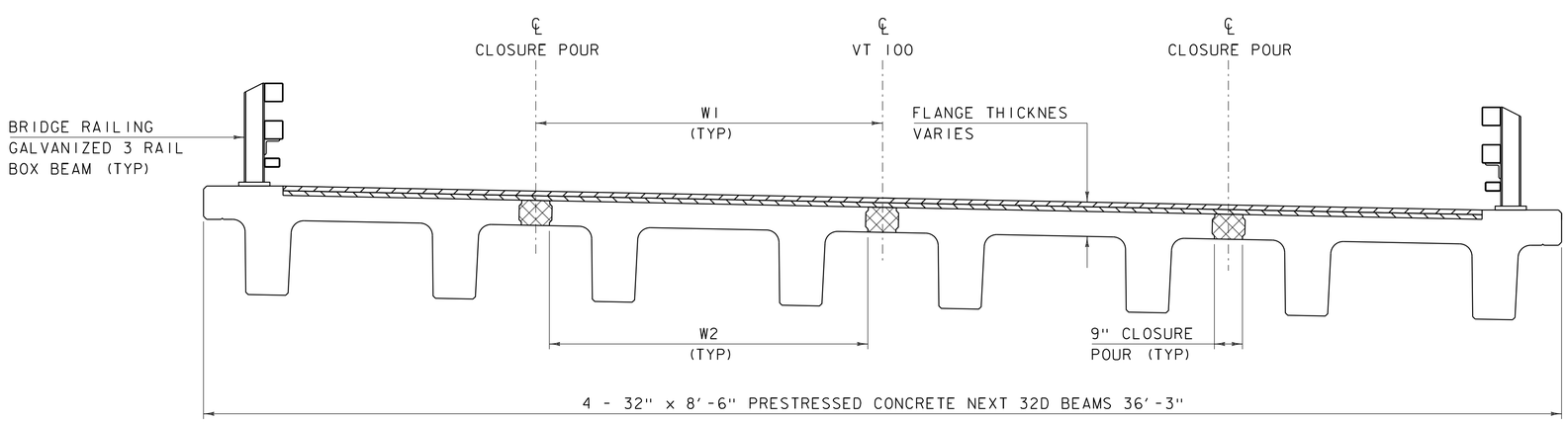

BRIDGE TYPICAL SECTION

SCALE 1/2" = 1'-0"

SPECIAL PROVISION (HIGH PERFORMANCE CONCRETE, RAPID SET)

BITUMINOUS CONCRETE PAVEMENT

L	79'-3/4"
W1	9'-3"
W2	8'-6"

SKEW	A1	70°
	A2	110°

PROJECT NAME: PITTSFIELD
PROJECT NUMBER: ER BRF 022-1(23)

FILE NAME: s86e060sup.dgn
PROJECT LEADER: K. HIGGINS
DESIGNED BY: J. GRIGAS
DECK PLAN

PLOT DATE: 18-SEP-2013
DRAWN BY: K. FRIEDLAND
CHECKED BY: G. LAROCHE
SHEET 24 OF 67

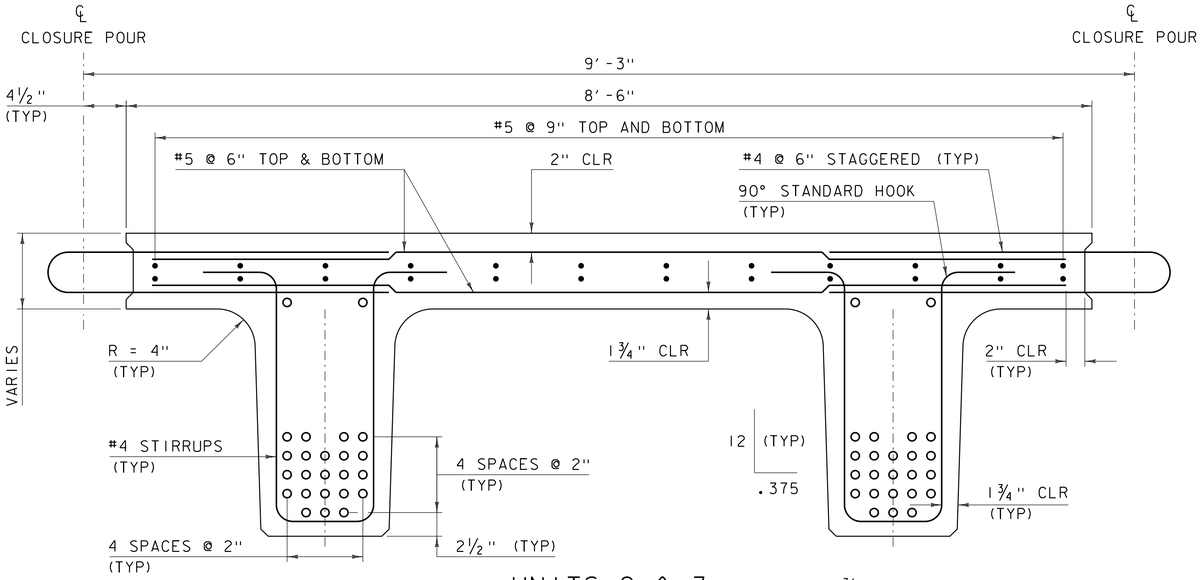

UNITS 2 & 3

SCALE = 1½" = 1'-0"

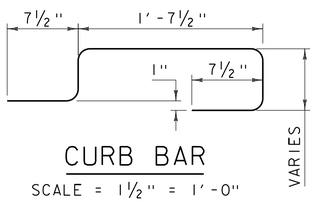

CURB BAR

SCALE = 1½" = 1'-0"

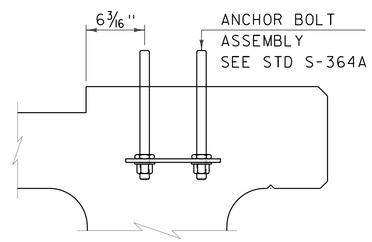

END SECTION

SCALE = 1½" = 1'-0"

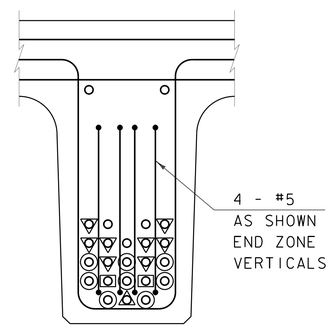

BEAM SECTION

SCALE = 1½" = 1'-0"

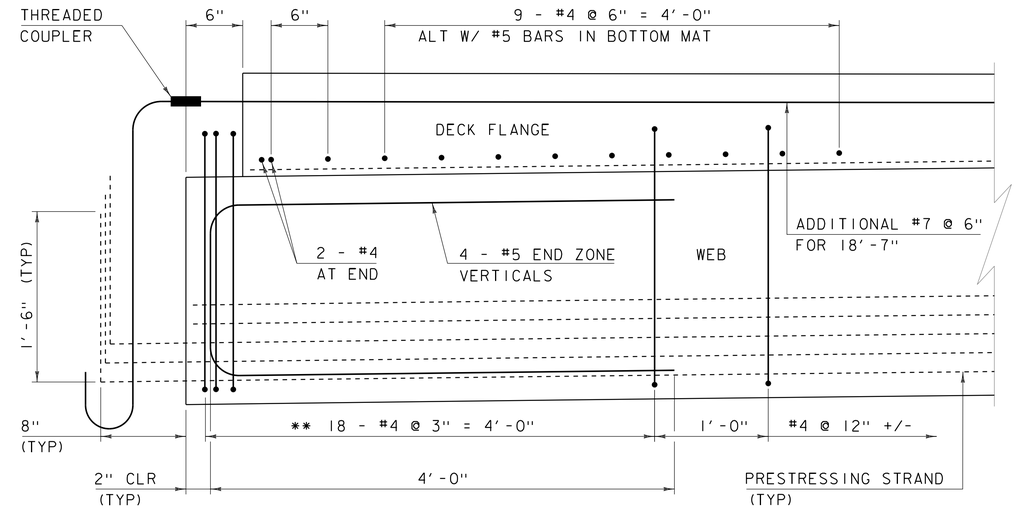

ADDITIONAL END BEAM REINFORCING LONGITUDINAL SECTION

SCALE = 1½" = 1'-0"

** NOTE:

1) THE FIRST AND THIRD PAIRS WILL BE BUNDLED.

LEGEND

- △ - DEBONDED 4'-0"
- □ - DEBONDED 2'-0"
- ▽ - DEBONDED 0'-6"
- ○ - EXTEND 2'-2" OUT OF BEAM (90° BEND @ 8" OUT)

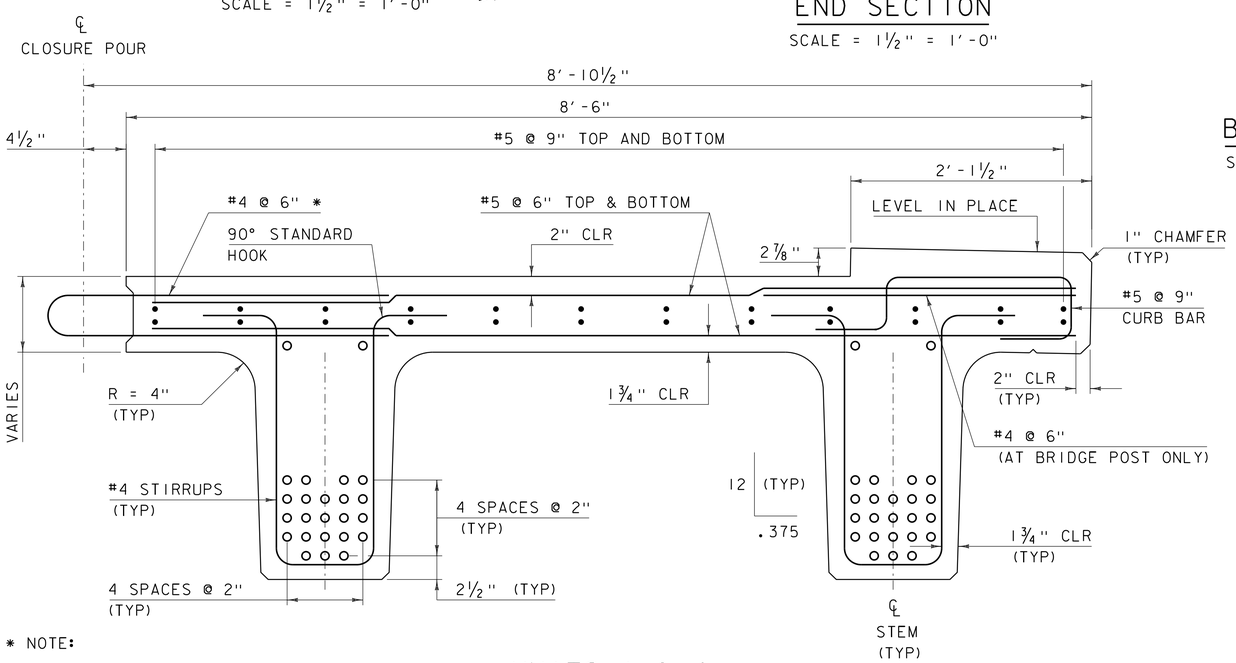

* NOTE:

1) BENDING RADIUS WILL VARY WITH FLANGE THICKNESS.

UNITS 1 & 4

SCALE = 1½" = 1'-0"

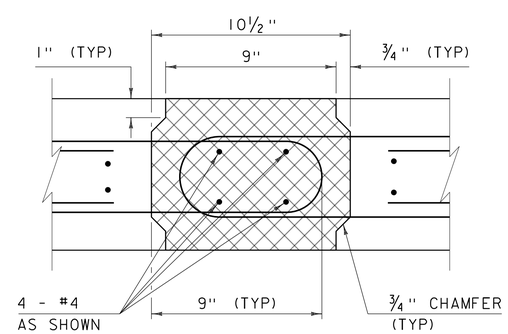

CONNECTION DETAIL SECTION

SCALE = 3" = 1'-0"

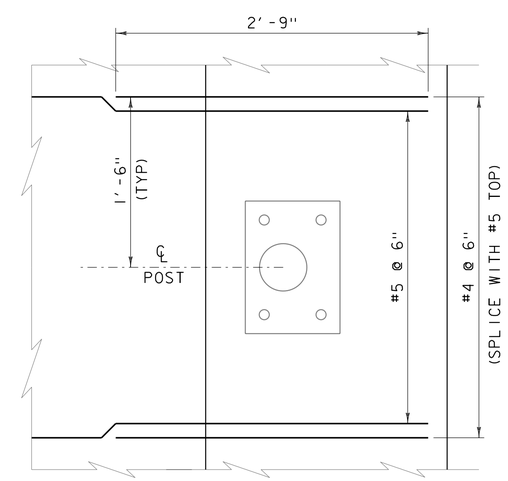

REINFORCING AT BRIDGE POST

SCALE = 1½" = 1'-0"

PROJECT NAME: PITTSFIELD	
PROJECT NUMBER: ER BRF 022-1(23)	
FILE NAME: s86e060sup.dgn	PLOT DATE: 18-SEP-2013
PROJECT LEADER: K. HIGGINS	DRAWN BY: K. FRIEDLAND
DESIGNED BY: J. GRIGAS	CHECKED BY: G. LAROCHE
NEXT BEAM DETAILS 1	SHEET 25 OF 67

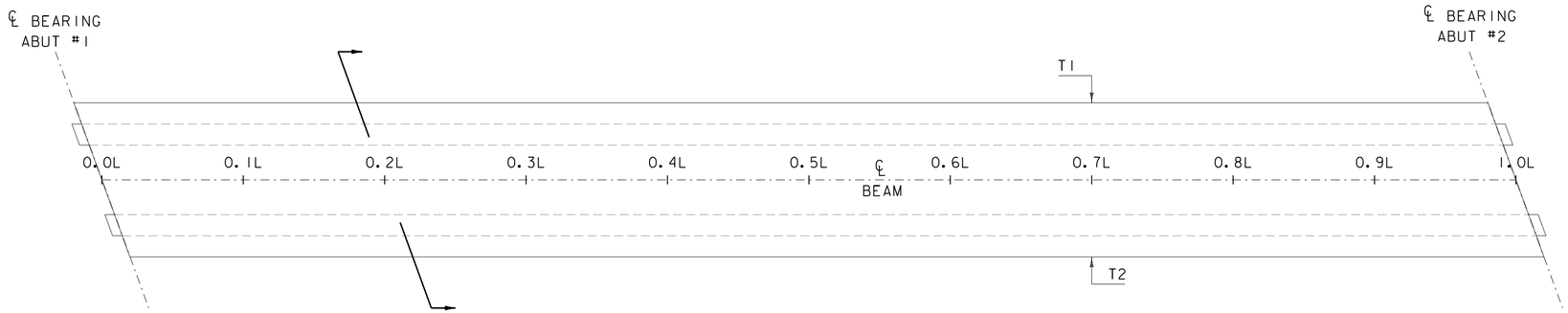

FLANGE PLAN

SCALE 1/2" = 1'-0"

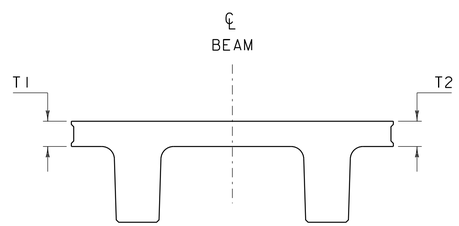

FLANGE SECTION UNITS 2 & 3

SCALE 1/2" = 1'-0"

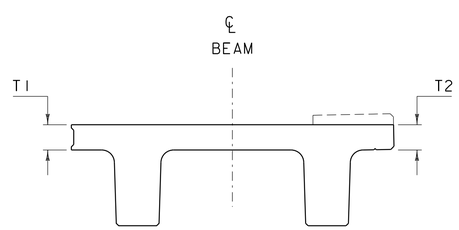

FLANGE SECTION UNITS 1 & 4

SCALE 1/2" = 1'-0"

		0.0L	0.1L	0.2L	0.3L	0.4L	0.5L	0.6L	0.7L	0.8L	0.9L	1.0L
NEXT 1	T1	10 3/4"	9 1/2"	8 1/2"	8 1/4"	8"	8"	8"	8 1/2"	9"	10 1/4"	12"
	T2	10 3/4"	9 1/2"	8 1/2"	8 1/4"	8"	8"	8"	8 1/2"	9 1/4"	10 1/4"	12 1/4"
NEXT 2	T1	10 3/4"	9 1/2"	8 3/4"	8 1/2"	8 1/4"	8 1/4"	8 1/4"	8 1/2"	9 1/4"	10 1/2"	12 1/4"
	T2	10 3/4"	9 1/2"	8 3/4"	8 1/2"	8 1/4"	8 1/4"	8 1/4"	8 3/4"	9 1/2"	10 3/4"	12 3/4"
NEXT 3	T1	10 3/4"	9 1/2"	8 3/4"	8 1/2"	8 1/4"	8 1/4"	8 1/4"	8 3/4"	9 1/2"	10 3/4"	12 3/4"
	T2	10 3/4"	9 1/2"	8 3/4"	8 1/2"	8 1/4"	8 1/4"	8 1/2"	9"	9 3/4"	11"	13"
NEXT 4	T1	10 3/4"	9 1/2"	8 3/4"	8 1/4"	8"	8 1/4"	8 1/4"	8 3/4"	9 3/4"	11"	13"
	T2	10 3/4"	9 1/2"	8 3/4"	8 1/4"	8"	8 1/4"	8 1/2"	9"	10"	11 1/4"	13 1/2"

FLANGE THICKNESS

PROJECT NAME: PITTSFIELD
PROJECT NUMBER: ER BRF 022-1(23)

FILE NAME: s86e060sup.dgn
PROJECT LEADER: K. HIGGINS
DESIGNED BY: J. GRIGAS
NEXT BEAM DETAILS 2

PLOT DATE: 18-SEP-2013
DRAWN BY: J. SALVATORI
CHECKED BY: G. LAROCHE
SHEET 26 OF 67

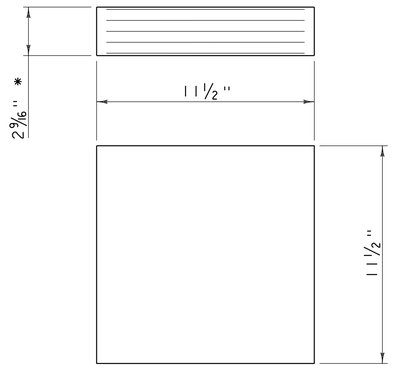

ELASTOMERIC BEARING DETAIL

SCALE 3" = 1'-0"

* 2 - 1/8" EXTERIOR LAYERS OF ELASTOMER
4 - 1/2" INTERIOR LAYERS OF ELASTOMER
5- 1/16" STEEL REINFORCING PLATES

BEARING NOTES:

1. BEARINGS SHALL CONFORM TO THE APPLICABLE SUBSECTIONS OF SECTIONS 531 AND 731.
2. ALL REINFORCEMENT BETWEEN LAYERS OF ELASTOMER SHALL BE STEEL MEETING THE REQUIREMENTS OF SUBSECTION 714.02. ALL INTERNAL STEEL PLATES SHALL BE SAND BLASTED AND FREE OF COATINGS, RUST AND MILL SCALE. THE PLATES SHALL BE FREE OF SHARP EDGES AND BURRS.
3. STEEL REINFORCED ELASTOMERIC BEARINGS SHALL HAVE A MINIMUM 1/8" EDGE SEAL OF ELASTOMER INTEGRAL WITH BEARING OVER ALL INTERNAL PLATES.
4. THE ELASTOMER WAS DESIGNED WITH A SHEAR MODULUS OF 100 PSI +/- 15%
5. THE CONCRETE UNDER THE BEARING DEVICE SHALL BE LEVEL.
6. THE CONTRACTOR IS ADVISED TO HAVE A MINIMUM OF 16 - 1/4"x12 1/2"x12 1/2" GALVANIZED STEEL SHIMS AVAILABLE FOR USE FOR ELEVATION ADJUSTMENTS UPON THE SETTING OF THE SUPERSTRUCTURE UNITS. THE SHIMS SHALL BE FABRICATED ACCORDING TO SECTION 531 AND SHALL BE INCLUDED IN THE UNIT PRICE BID FOR ITEM 531.17,"BEARING DEVICE ASSEMBLY, STEEL REINFORCED ELASTOMERIC PAD".

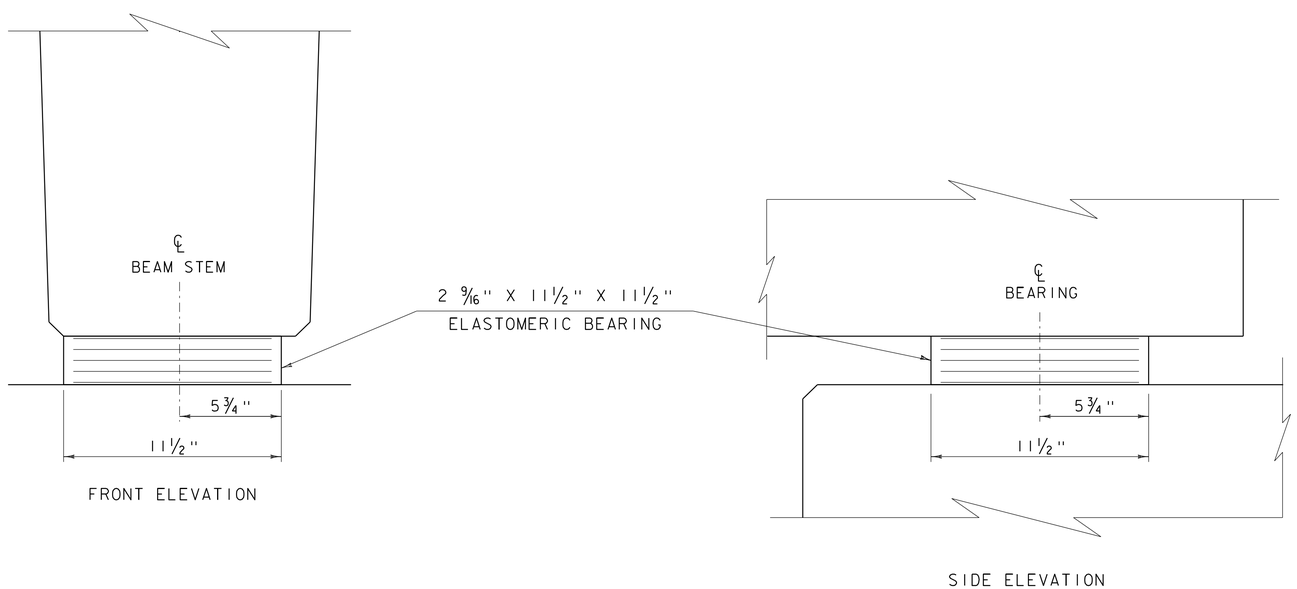

ELASTOMERIC BEARING DETAILS

SCALE 3" = 1'-0"

PROJECT NAME: PITTSFIELD	
PROJECT NUMBER: ER BRF 022-1(23)	
FILE NAME: s86e060brg.dgn	PLOT DATE: 18-SEP-2013
PROJECT LEADER: K. HIGGINS	DRAWN BY: K. FRIEDLAND
DESIGNED BY: J. GRIGAS	CHECKED BY: G. LAROCHE
BEARING DETAILS	SHEET 27 OF 67

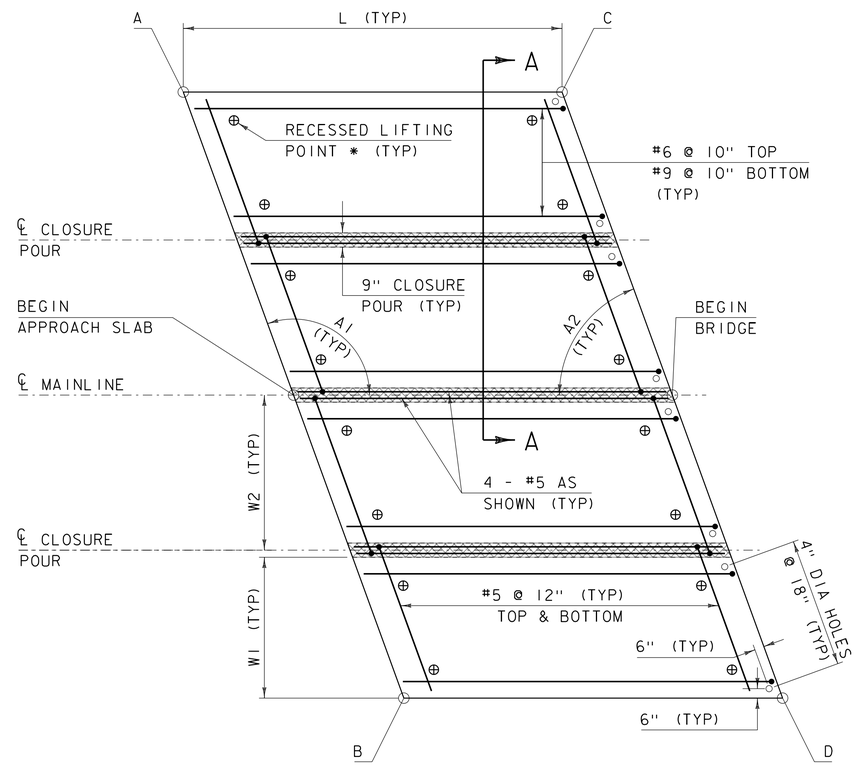

APPROACH SLAB #1 PLAN VIEW

SCALE 1/4" = 1'-0"

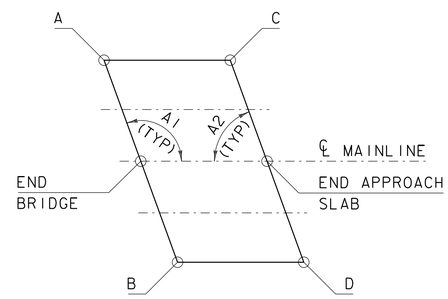

APPROACH SLAB #2 PLAN VIEW

NOT TO SCALE

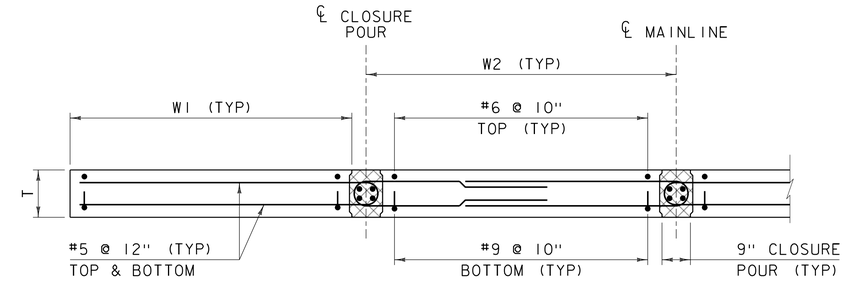

SECTION A-A

SCALE 1/2" = 1'-0"

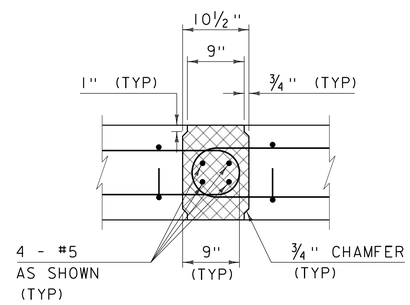

CONNECTION DETAIL SECTION

SCALE 1" = 1'-0"

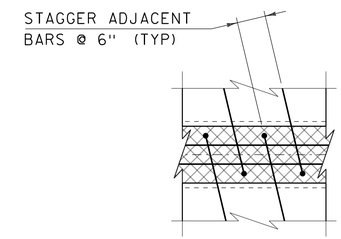

CONNECTION DETAIL PLAN

SCALE 1" = 1'-0"

APPROACH SLAB #1			
	STATION	OFFSET	ELEVATION
1A	131+44.76	-16'-0"	891.53
BEGIN AS #1	131+50.58	℄	891.27
1B	131+56.40	16'-0"	890.93
1C	131+64.76	-16'-0"	891.72
END AS #1	131+70.58	℄	891.45
1D	131+76.40	16'-0"	891.12
APPROACH SLAB #2			
	STATION	OFFSET	ELEVATION
2A	132+45.60	-16'-0"	892.56
BEGIN AS #2	132+51.42	℄	892.36
2B	132+57.24	16'-0"	892.16
2C	132+65.60	-16'-0"	892.97
END AS #2	132+71.42	℄	892.77
2D	132+77.24	16'-0"	892.56

APPROACH SLAB ELEVATIONS

ALL ELEVATIONS ARE TOP OF SLAB

NOTES:

1. LIFTING POINTS SHALL BE DESIGNED BY FABRICATOR AND SUBMITTED WITH CALCULATIONS.
2. REINFORCING STEEL FOR APPROACH SLAB #1 SHOWN, APPROACH SLAB #2 SIMILAR.

T	1'-3"
L	20'-0"
W1	7'-5 1/4"
W2	8'-2 1/4"

APPROACH SLAB #1	A1	110°
	A2	70°

APPROACH SLAB #2	A1	110°
	A2	70°

APPROACH SLAB DIMENSIONS

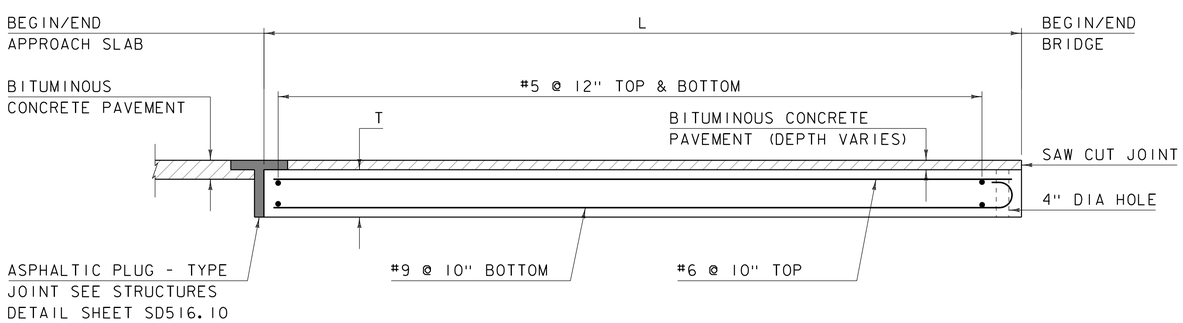

APPROACH SLAB ELEVATION VIEW

SCALE 1/2" = 1'-0"

NOTE:

NF = NEAR FACE
FF = FAR FACE
EF = EACH FACE
3" CLEAR, UNLESS OTHERWISE SPECIFIED ON THE PLANS.
2'-7" BAR LAP UNLESS OTHERWISE SPECIFIED ON THE PLANS.

PROJECT NAME: PITTSFIELD
PROJECT NUMBER: ER BRF 022-1(23)

FILE NAME: s86e060apslab.dgn
PROJECT LEADER: K. HIGGINS
DESIGNED BY: J. GRIGAS
APPROACH SLAB DETAILS

PLOT DATE: 18-SEP-2013
DRAWN BY: K. FRIEDLAND
CHECKED BY: J. SALVATORI
SHEET 28 OF 67

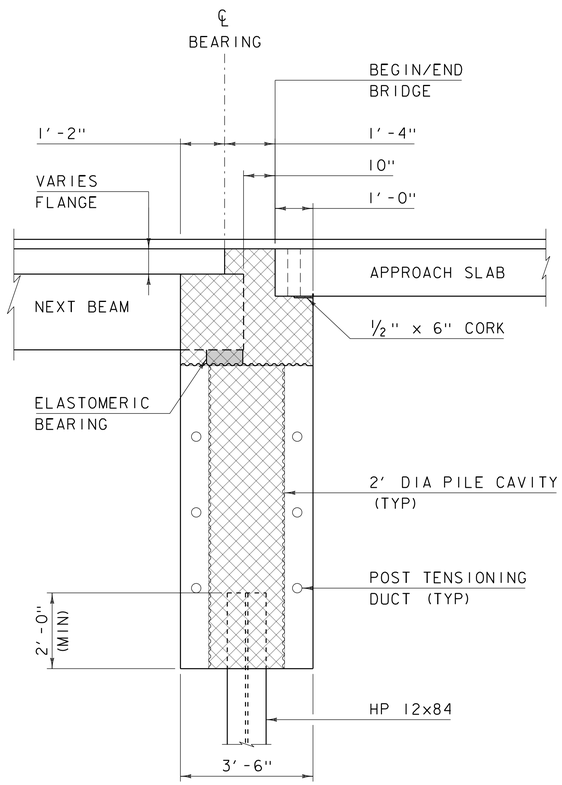

ABUTMENT TYPICAL

SCALE ½" = 1'-0"

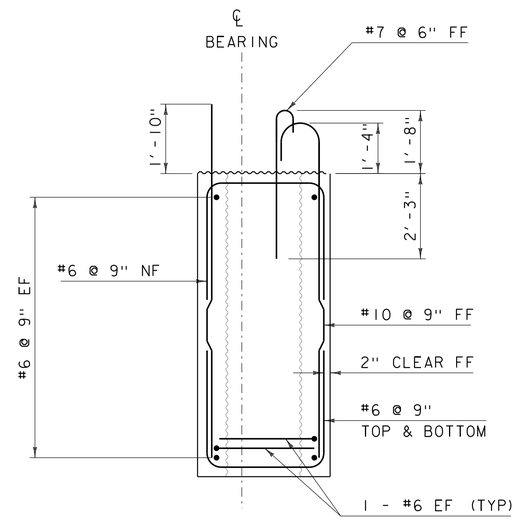

ABUTMENT REINFORCING AT BRIDGE SEAT

SCALE ½" = 1'-0"

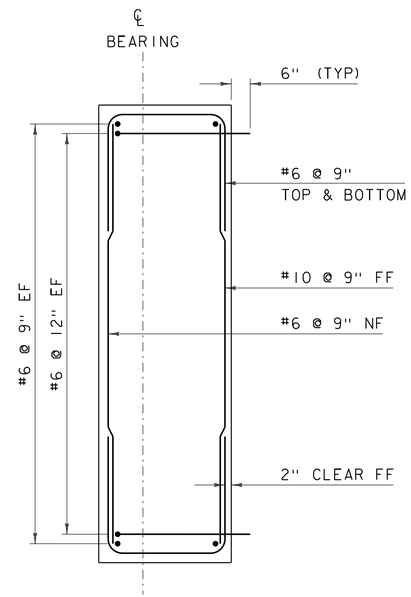

ABUTMENT REINFORCING AT CHEEK WALL

SCALE ½" = 1'-0"

NOTE:

NF = NEAR FACE
FF = FAR FACE
EF = EACH FACE
3" CLEAR, UNLESS OTHERWISE SPECIFIED ON THE PLANS.
3'-1" BAR LAP UNLESS OTHERWISE SPECIFIED ON THE PLANS.

PROJECT NAME: PITTSFIELD	
PROJECT NUMBER: ER BRF 022-1(23)	
FILE NAME: s86e060subl.dgn	PLOT DATE: 18-SEP-2013
PROJECT LEADER: K. HIGGINS	DRAWN BY: K. FRIEDLAND
DESIGNED BY: J. GRIGAS	CHECKED BY: G. LAROCHE
ABUTMENT TYPICALS	SHEET 29 OF 67

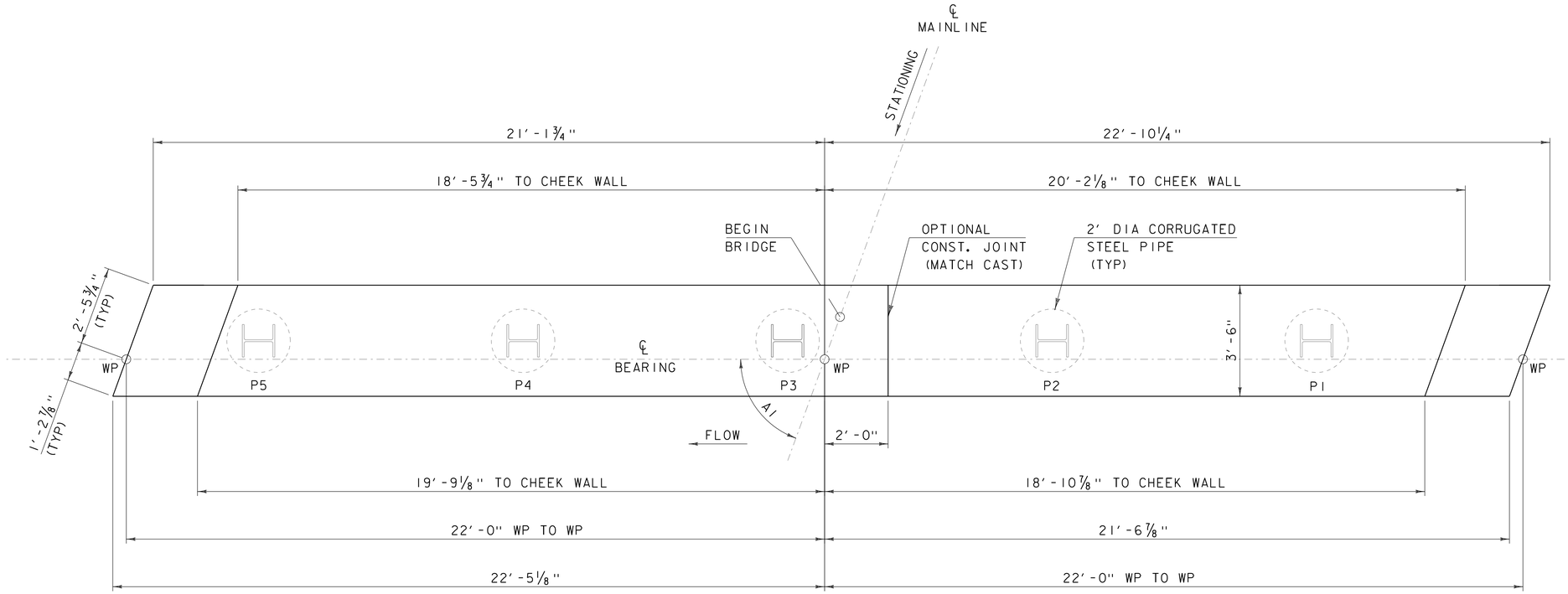

ABUTMENT 1 PLAN (PCU 1)

SCALE ½" = 1'-0"

PCU 1 ELEVATIONS

	AB1
ANGLE "A1"	70°
ELEV "A"	892.03
ELEV "B"	891.62
ELEV "C"	888.65
ELEV "D"	888.35
ELEV "E"	888.05
ELEV "F"	879.95

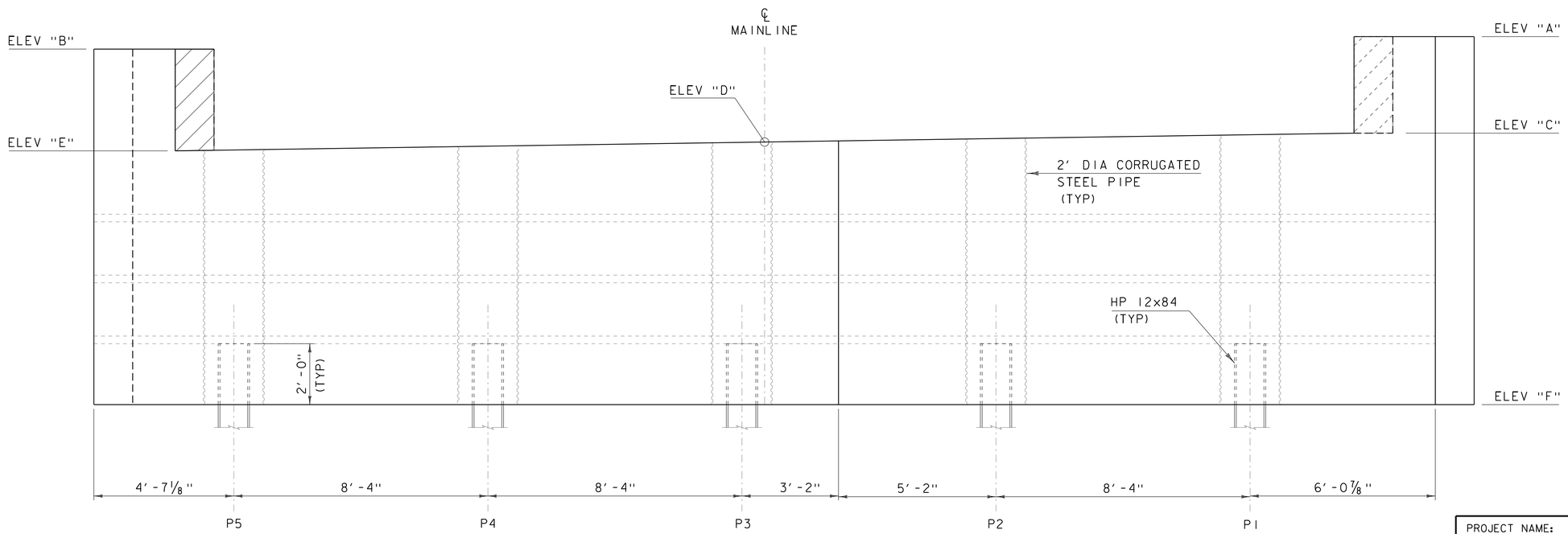

ABUTMENT 1 ELEVATION (PCU 1)

SCALE ½" = 1'-0"

PROJECT NAME: PITTSFIELD
PROJECT NUMBER: ER BRF 022-1(23)

FILE NAME: s86e060sub1.dgn
PROJECT LEADER: K. HIGGINS
DESIGNED BY: J. GRIGAS
ABUTMENT 1

PLOT DATE: 18-SEP-2013
DRAWN BY: K. FRIEDLAND
CHECKED BY: G. LAROCHE
SHEET 30 OF 67

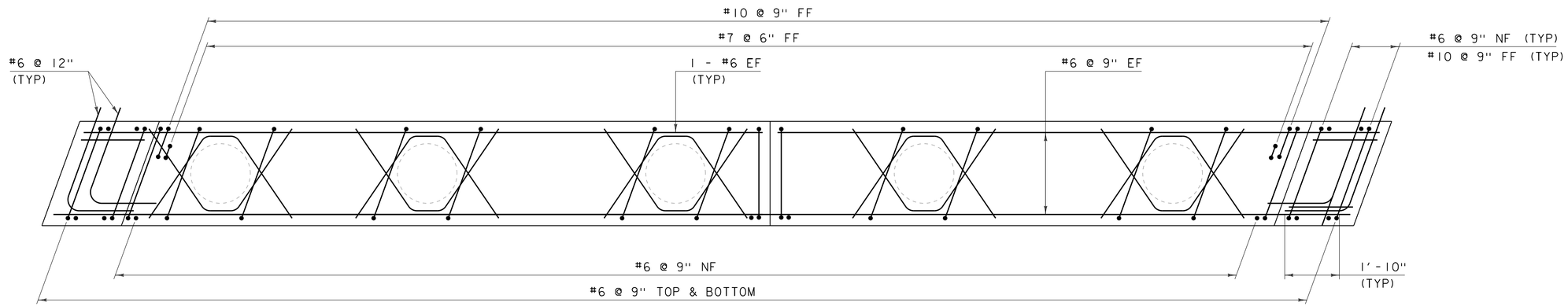

ABUTMENT 1 REINFORCING PLAN (PCU 1)

SCALE ½" = 1'-0"

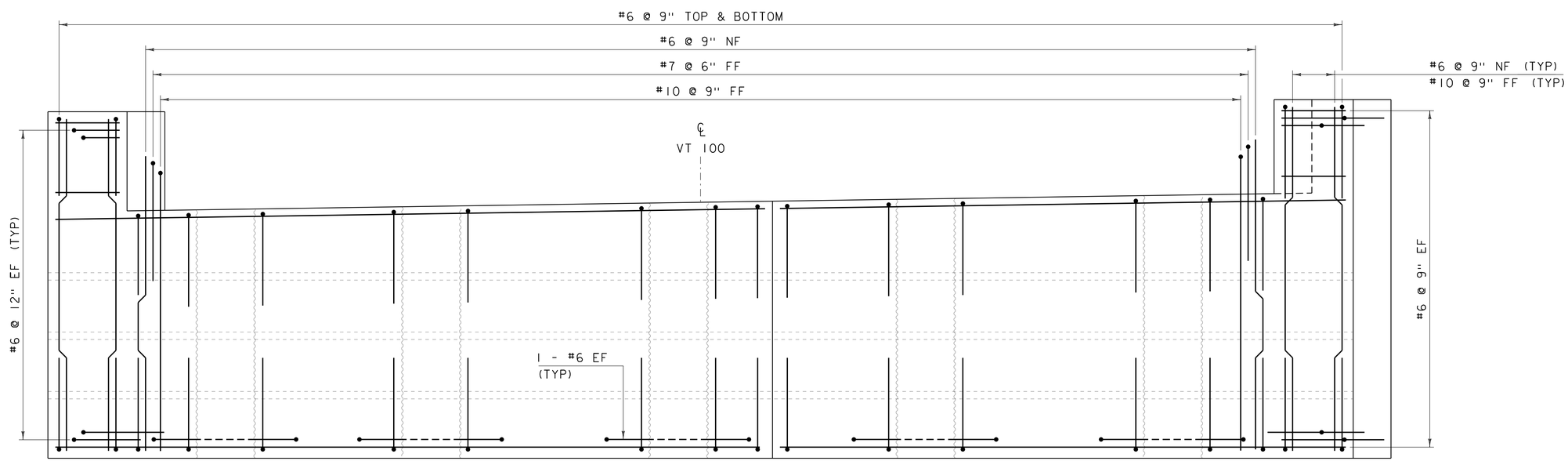

ABUTMENT 1 REINFORCING ELEVATION (PCU 1)

SCALE ½" = 1'-0"

NOTE:

1. REINFORCING STEEL FOR PCU 1 SHOWN, PCU 2 SIMILAR.

NOTE:

NF = NEAR FACE
FF = FAR FACE
EF = EACH FACE
3" CLEAR, UNLESS OTHERWISE SPECIFIED ON THE PLANS.
3'-1" BAR LAP UNLESS OTHERWISE SPECIFIED ON THE PLANS.

PROJECT NAME: PITTSFIELD	
PROJECT NUMBER: ER BRF 022-1(23)	
FILE NAME: s86e060subl.dgn	PLOT DATE: 18-SEP-2013
PROJECT LEADER: K. HIGGINS	DRAWN BY: K. FRIEDLAND
DESIGNED BY: J. GRIGAS	CHECKED BY: G. LAROCHE
ABUTMENT 1 REINFORCING	SHEET 31 OF 67

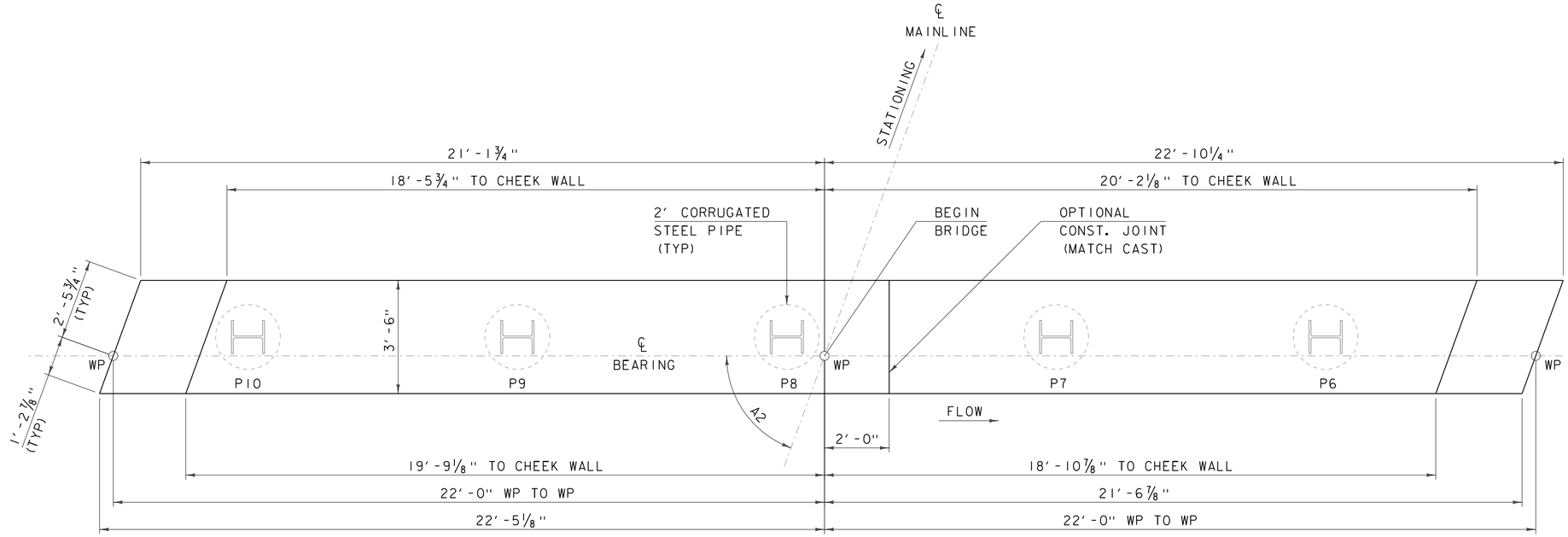

ABUTMENT 2 PLAN (PCU 2)

SCALE ½" = 1'-0"

PCU 2 ELEVATIONS

	AB 2
ANGLE "A2"	70°
ELEV "A"	892.54
ELEV "B"	892.95
ELEV "C"	888.78
ELEV "D"	889.08
ELEV "E"	889.38
ELEV "F"	880.87

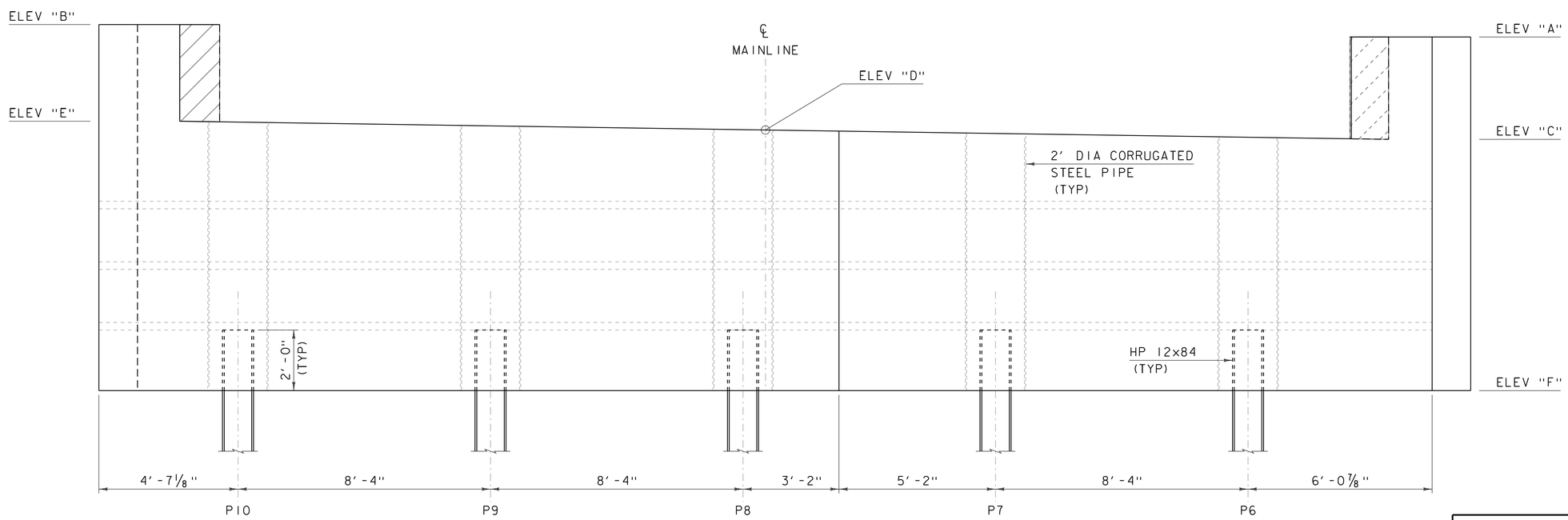

ABUTMENT 2 ELEVATION (PCU 2)

SCALE ½" = 1'-0"

PROJECT NAME: PITTSFIELD
PROJECT NUMBER: ER BRF 022-1(23)

FILE NAME: s86e060sub.dgn
PROJECT LEADER: K. HIGGINS
DESIGNED BY: J. GRIGAS
ABUTMENT 2

PLOT DATE: 18-SEP-2013
DRAWN BY: K. FRIEDLAND
CHECKED BY: G. LAROCHE
SHEET 32 OF 67

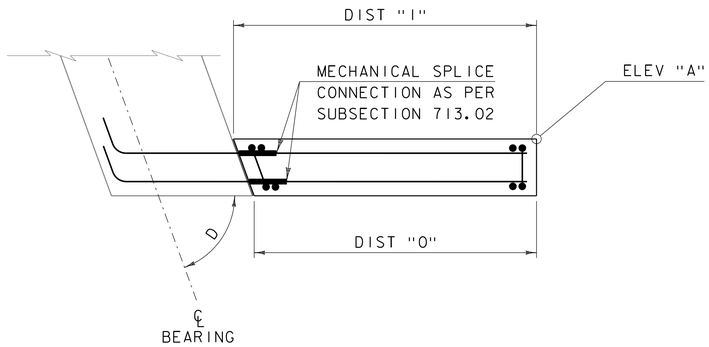

WWI PLAN (PCU 3)

SCALE ½" = 1'-0"

PCU 3-6 ELEVATIONS

	WW1 (PCU 3)	WW2 (PCU 4)	WW3 (PCU 5)	WW4 (PCU 6)
ELEV "A"	892.03	891.62	892.95	892.54
ELEV "B"	879.95	879.95	880.87	880.87
DIST "H"	12'-1"	11'-8"	12'-1"	11'-8"
DIST "W"	1'-6"	1'-6"	1'-6"	1'-6"
DIST "I"	8'-0"	6'-11½"	6'-11½"	8'-0"
DIST "O"	7'-5½"	7'-6"	7'-6"	7'-5½"
ANGLE "D"	70°	110°	110°	70°

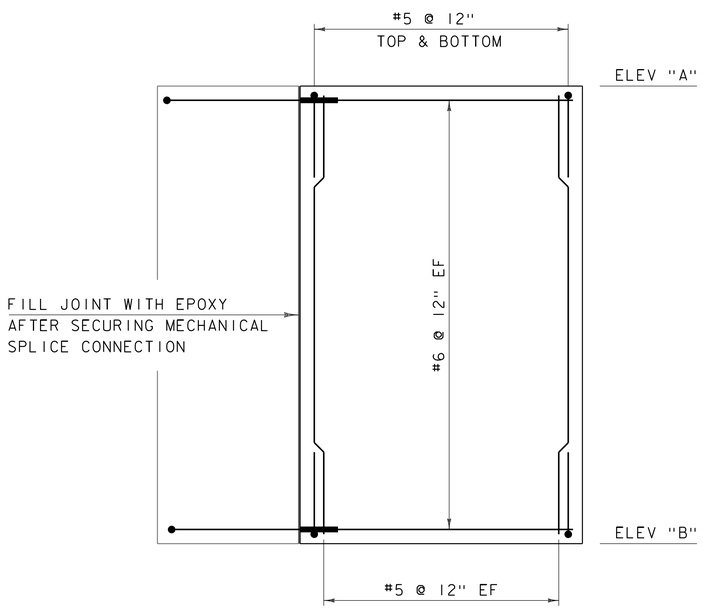

WWI ELEVATION (PCU 3)

SCALE ½" = 1'-0"

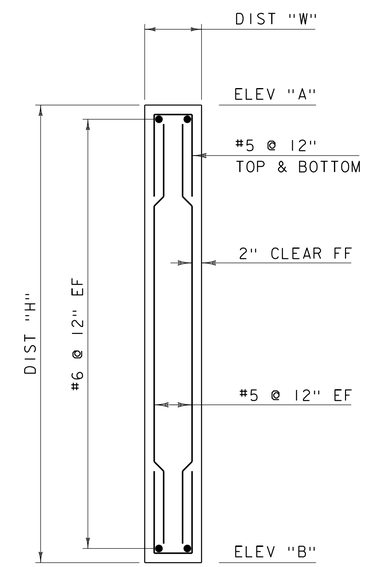

WWI TYPICAL (PCU 3)

SCALE ½" = 1'-0"

NOTE:

NF = NEAR FACE
FF = FAR FACE
EF = EACH FACE
▲ = CUT TO FIT IN FIELD
3" CLEAR, UNLESS OTHERWISE SPECIFIED ON THE PLANS.
2'-7" BAR LAP UNLESS OTHERWISE SPECIFIED ON THE PLANS.

NOTES:

1. EPOXY GROUT SHALL BE INCIDENTAL TO ITEM 540.10, "PRECAST CONCRETE STRUCTURE".
2. ALL REINFORCING STEEL AND MECHANICAL CONNECTORS SHALL BE INCIDENTAL TO ITEM 540.10, "PRECAST CONCRETE STRUCTURE".
3. ALL REINFORCING STEEL IN WINGWALLS SHALL MEET THE REQUIREMENTS OF SECTION 507 FOR LEVEL II REINFORCING. ALL MECHANICAL CONNECTORS IN WINGWALLS SHALL MEET THE REQUIREMENTS OF SECTION 507 FOR LEVEL I (EPOXY COATED) REINFORCING.
4. THE BRIDGE PLAQUE FURNISHED BY THE AGENCY SHALL BE CAST INTO WINGWALL 2. ALL WORK TO INSTALL THE PLAQUE SHALL BE INCIDENTAL TO THE PRECAST CONCRETE STRUCTURE ITEM. SEE SD-502.00 FOR FURTHER DETAILS.
5. WW1 SHOWN, OTHERS SHALL BE SIMILAR.

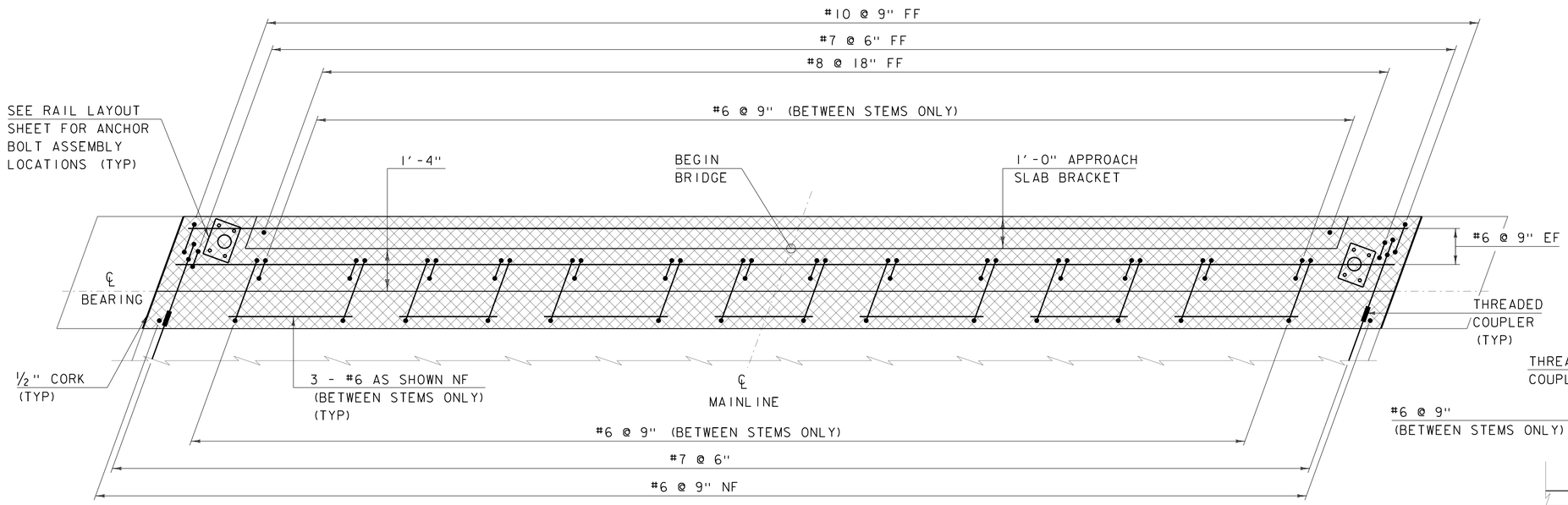

DECK CLOSURE POUR REINFORCING PLAN

SCALE 1/2" = 1'-0

NOTE:

NF = NEAR FACE
FF = FAR FACE
EF = EACH FACE
▲ = CUT TO FIT IN FIELD
3" CLEAR, UNLESS OTHERWISE SPECIFIED ON THE PLANS.
2'-7" BAR LAP UNLESS OTHERWISE SPECIFIED ON THE PLANS.

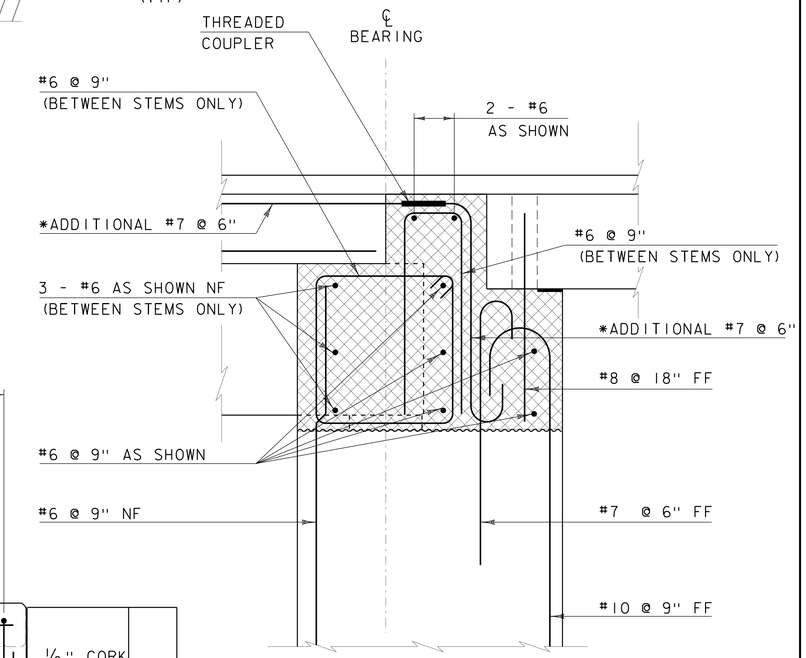

REINFORCING TYPICAL

SCALE 1" = 1'-0

* ADDITIONAL #7 @ 6" SHALL BE LEVEL 1, EPOXY COATED

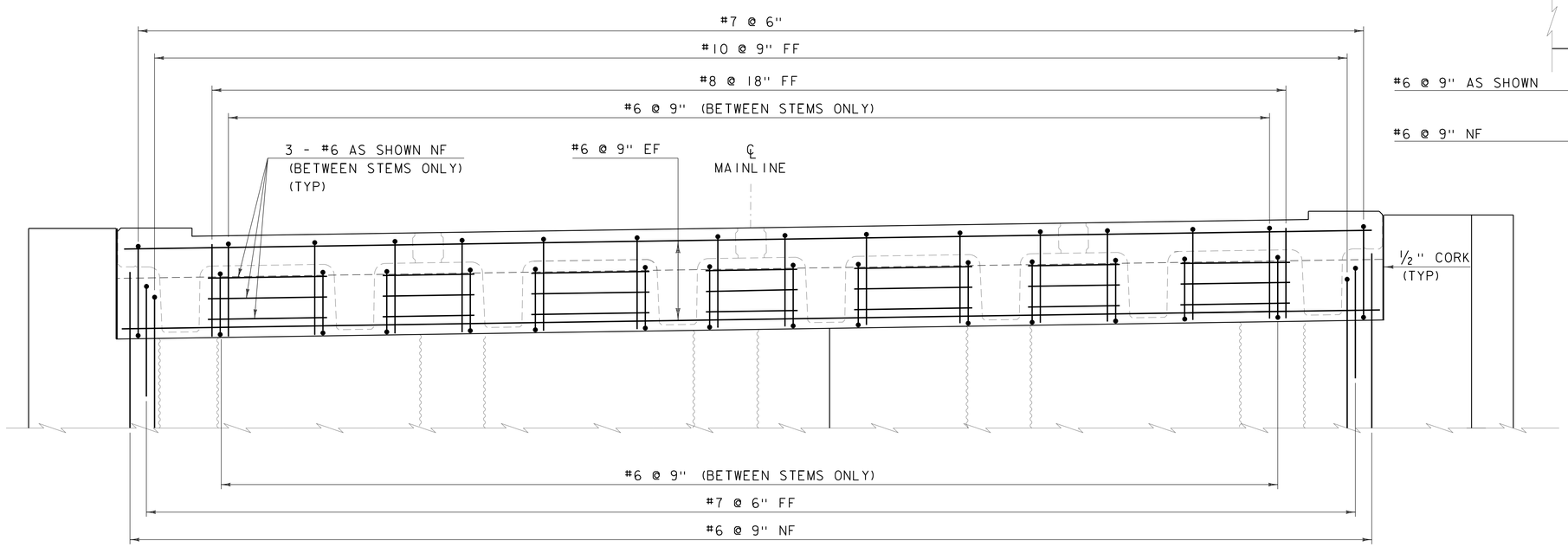

DECK CLOSURE POUR REINFORCING ELEVATION

SCALE 1/2" = 1'-0

NOTE:

1. REINFORCING STEEL FOR PCU 1 SHOWN, PCU 2 SIMILAR.

PROJECT NAME: PITTSFIELD	
PROJECT NUMBER: ER BRF 022-1(23)	
FILE NAME: s86e060closure.dgn	PLOT DATE: 18-SEP-2013
PROJECT LEADER: K. HIGGINS	DRAWN BY: K. FRIEDLAND
DESIGNED BY: J. GRIGAS	CHECKED BY: G. LAROCHE
DECK CLOSURE POUR	SHEET 34 OF 67

EPSC PLAN NARRATIVE

1.1 PROJECT DESCRIPTION

THIS PROJECT INVOLVES THE REPLACEMENT OF BRIDGE 124 WHICH IS LOCATED IN THE TOWN OF PITTSFIELD ON VERMONT ROUTE 100, 3.5 MILES SOUTH OF THE JUNCTION OF VERMONT ROUTE 107. THERE IS CURRENTLY A TEMPORARY BRIDGE IN PLACE, OFF ALIGNMENT, THAT WAS INSTALLED AFTER TROPICAL STORM IRENE. THE NEW STRUCTURE WILL BE APPROXIMATELY 80 FEET IN LENGTH WITH 270 FEET OF ROADWAY WORK.

NOTE: AREA OF DISTURBANCE INCLUDES LIMITS OF EARTH DISTURBANCE WITHIN THE PROJECT AREA, AS WELL AS WASTE, BORROW AND STAGING AREAS, AND OTHER EARTH DISTURBING ACTIVITIES WITHIN OR DIRECTLY ADJACENT TO THE PROJECT LIMITS AS SHOWN ON THE ATTACHED EPSC PLAN.

TOTAL AREA OF DISTURBANCE AS SHOWN ON THE ATTACHED EPSC PLAN IS APPROXIMATELY 1.2 ACRES.

IT IS ANTICIPATED THAT THIS PROJECT WILL LAST ONE CONSTRUCTION SEASON.

1.2 SITE INVENTORY

1.2.1 TOPOGRAPHY
THE TOPOGRAPHY OF THE AREA IS HILLY TO MOUNTAINOUS THAT IS MOSTLY OPEN WITH SOME WELL ESTABLISHED TREE LINES AND SOME SHORT STEEP SLOPES.

1.2.2 DRAINAGE, WATERWAYS, BODIES OF WATER, AND PROXIMITY TO NATURAL OR MAN-MADE WATER FEATURES
THE SOUTH BRANCH TWEED RIVER IS THE ONLY WATER SOURCE ON THE PROJECT SITE. THE RIVER IS CLASSIFIED AS SINUOUS AND ALLUVIAL. THE STREAM BED CONSISTS OF GRAVEL, COBBLES AND BOULDERS.

1.2.3 VEGETATION
THE VEGETATION IN THE PROJECT AREA CONSISTS OF HARDWOOD AND SOFTWOOD TREES WITH UNDERGROWTH AS WELL AS OPEN FIELDS ON THE DOWNSTREAM SIDE OF THE BRIDGE. THE IMPACT TO VEGETATION WILL BE LIMITED TO THAT WHICH IS DIRECTLY AFFECTED BY REPLACEMENT OF THE EXISTING BRIDGE. UPON PROJECT COMPLETION, THE CHANNEL WILL BE ARMORED WITH STONE FILL TYPE IV AS SPECIFIED ON THE PLANS. DISTURBED VEGETATION WILL BE REESTABLISHED WITH STANDARD SEED AND MULCH PRACTICES.

1.2.4 SOILS
ALL SOIL DATA CAME FROM THE U.S. DEPARTMENT OF AGRICULTURE SOIL CONSERVATION SERVICE FOR THE COUNTY OF WINDSOR, VERMONT. SOILS ON THE PROJECT SITE ARE:

13B HINCKLEY GRAVELLY LOAM FINE SAND	0% TO 8% SLOPES	"K" FACTOR = 0.17
57B DUXBURY-COLTON, COMPLEX	2% TO 8% SLOPES	"K" FACTOR = 0.32 / 0.24

NOTE: K-VALUES GENERALLY INDICATE THE FOLLOWING:
0.0-0.23 = LOW EROSION POTENTIAL
0.24-0.36 = MODERATE EROSION POTENTIAL
0.37 AND HIGHER = HIGH EROSION POTENTIAL

1.2.5 SENSITIVE RESOURCE AREAS
CRITICAL HABITATS: NO
HISTORICAL OR ARCHEOLOGICAL AREAS: YES HISTORICAL, (SEE PLANS, STA 136+00.00 RT)
PRIME AGRICULTURAL LAND: NO
THREATENED AND ENDANGERED SPECIES: NO
WATER RESOURCE: SOUTH BRANCH TWEED RIVER
WETLANDS: NO

1.3 RISK EVALUATION

THIS PROJECT FALLS UNDER THE JURISDICTION OF GENERAL PERMIT 3-9020 FOR STORMWATER RUNOFF FROM CONSTRUCTION SITES FOR LOW RISK PROJECTS. ANY MODIFICATIONS TO THE PROJECT THAT INCREASE THE RISK TO ENVIRONMENTAL RESOURCES SHALL BE EVALUATED IN ACCORDANCE WITH THE PERMIT REQUIREMENTS. THE CONTRACTOR WILL BE RESPONSIBLE FOR ANY ADDITIONAL PERMITTING.

1.4 EROSION PREVENTION AND SEDIMENT CONTROL

THE EROSION CONTROL PLANS ARE MEANT AS A GUIDELINE FOR PREVENTING EROSION AND CONTROLLING SEDIMENT TRANSPORT. THE PRINCIPLES OUTLINED IN THIS NARRATIVE CONSIST OF APPLYING MEASURES THROUGHOUT CONSTRUCTION OF THE PROJECT IN ORDER TO MINIMIZE SEDIMENT TRANSPORT TO THE RECEIVING WATERS. THE MEASURES INCLUDE STABILIZATION AND STRUCTURAL PRACTICES, STORM WATER CONTROLS AND OTHER POLLUTION PREVENTION PRACTICES. THEY HAVE BEEN PROPOSED BY THE DESIGNER AS A BASIS FOR PROTECTING RESOURCES AND WILL NEED TO BE BUILT UPON BASED ON THE SPECIFIC MEANS AND METHODS OF THE CONTRACTOR. REFER TO THE LOW RISK SITE HANDBOOK AND APPROPRIATE DETAIL SHEETS FOR SPECIFIC GUIDANCE AND CONSTRUCTION DETAILING.

ALL MEASURES SHALL BE REGULARLY MAINTAINED AND SHALL BE CHECKED FOR SEDIMENT BUILD-UP. SEDIMENT SHALL BE DISPOSED OF AT AN APPROVED SITE WHERE IT WILL NOT BE SUBJECT TO EROSION.

1.4.1 MARK SITE BOUNDARIES
SITE BOUNDARIES AND AREAS CONSTRUCTION EQUIPMENT CAN ACCESS SHALL BE DELINEATED.

PROJECT DEMARCATION FENCING (PDF) SHALL BE USED TO PHYSICALLY MARK SITE BOUNDARIES. BECAUSE THIS PROJECT FALLS UNDER THE CGP 3-9020, BARRIER FENCE SHALL BE USED INSTEAD OF PROJECT DEMARCATION FENCE WITHIN 100 FEET OF A WATER RESOURCE (STREAM, BROOK, LAKE, POND, WETLAND, ETC).

1.4.2 LIMIT DISTURBANCE AREA
PREVENTING INITIAL SOIL EROSION BY MINIMIZING THE EXPOSED AREA IS MUCH MORE EFFECTIVE THAN TREATING ERODED SEDIMENT. EARTH DISTURBANCE CAN BE MINIMIZED THROUGH CONSTRUCTION PHASING BY ONLY OPENING UP EARTH AS NECESSARY. THIS CAN LIMIT THE AREA THAT WILL BE DISTURBED AND EXPOSED TO EROSION. EMPLOY TEMPORARY CONSTRUCTION STABILIZATION PRACTICES IN INCREMENTAL STAGES AS PHASES CHANGE. FOR PROJECTS WHICH FALL UNDER THE CONSTRUCTION GENERAL PERMIT, ONLY THE ACREAGE LISTED ON THE PERMIT AUTHORIZATION MAY BE EXPOSED AT ANY GIVEN TIME.

MAINTAINING VEGETATED BUFFERS ALONG STREAM BANKS, WETLANDS OR OTHER SENSITIVE AREAS IS A CRUCIAL EROSION AND SEDIMENT CONTROL MEASURE THAT SHOULD BE ESTABLISHED WHEREVER POSSIBLE.

1.4.3 SITE ENTRANCE/EXIT STABILIZATION
TRACKING OF SEDIMENT ONTO PUBLIC HIGHWAYS SHALL BE MINIMIZED TO REDUCE THE POTENTIAL FOR RUNOFF ENTERING RECEIVING WATERS. INSTALLATION SHALL COINCIDE WITH THE CONTRACTORS PROGRESS SCHEDULE.

STABILIZED CONSTRUCTION ENTRANCES SHALL BE INSTALLED AS PROPOSED ON THE EPSC PLAN AND ANYWHERE EQUIPMENT WILL BE GOING FROM AREAS OF EXPOSED SOILS TO PAVED SURFACES.

1.4.4 INSTALL SEDIMENT BARRIERS
SEDIMENT BARRIERS SHALL BE UTILIZED TO INTERCEPT RUNOFF AND ALLOW SUSPENDED SEDIMENT TO SETTLE OUT. THEY SHALL BE INSTALLED PRIOR TO ANY UP SLOPE WORK.

FILTER CURTAIN SHALL BE INSTALLED AS PROPOSED ON THE EPSC PLANS PRIOR TO ANY CHANNEL WORK.

SILT FENCE WILL BE INSTALLED AS PROPOSED ON THE EPSC PLAN. BECAUSE THIS PROJECT FALLS UNDER THE CGP 3-9020, WOVEN WIRE REINFORCED SILT FENCE SHALL BE USED INSTEAD OF SILT FENCE WITHIN 100 FEET UPSLOPE OF RECEIVING WATERS.

1.4.5 DIVERT UPLAND RUNOFF
DIVERSIONARY MEASURES SHALL BE USED TO INTERCEPT RUNOFF FROM ABOVE THE CONSTRUCTION AND DIRECT IT AROUND THE DISTURBED AREA SO THAT CLEAN WATER DOES NOT BECOME MUDDIED WHILE TRAVELING OVER EXPOSED SOILS ON THE CONSTRUCTION SITE.

IT IS NOT ANTICIPATED THAT DIVERSIONARY MEASURES WILL BE NEEDED ON THIS PROJECT.

1.4.6 SLOW DOWN CHANNELIZED RUNOFF
CHECK STRUCTURES SHALL BE UTILIZED TO REDUCE THE VELOCITY, AND THUS THE EROSIVE POTENTIAL, OF CONCENTRATED FLOW IN CHANNELS.

IT IS NOT ANTICIPATED THAT DIVERSIONARY MEASURES WILL BE NEEDED ON THIS PROJECT.

1.4.7 CONSTRUCT PERMANENT CONTROLS
PERMANENT STORMWATER TREATMENT DEVICES SHALL BE INSTALLED AS SHOWN ON THE PLANS AND IN ACCORDANCE WITH PERMIT CONDITIONS. STONE FILL SHALL BE INSTALLED AS SHOWN ON THE EPSC PLANS. GEOTEXTILE SHALL BE INSTALLED BELOW THE STONE FILL TYPE IV AS SHOWN ON THE CHANNEL CROSS SECTIONS.

1.4.8 STABILIZE EXPOSED SOILS DURING CONSTRUCTION
ALL AREAS OF DISTURBANCE MUST HAVE TEMPORARY STABILIZATION IN PLACE WITHIN 48 HOURS OF DISTURBANCE OR IN ACCORDANCE WITH THE CONSTRUCTION GENERAL PERMIT 3-9020 AUTHORIZATION.

SURFACE ROUGHENING OF ALL EXPOSED SLOPES, COMBINED WITH TEMPORARY MULCHING, SHALL BE UTILIZED ON A REGULAR BASIS. BIODEGRADABLE EROSION CONTROL MATTING OR AN EQUIVALENT SHALL BE USED TO STABILIZE ALL SLOPES STEEPER THAN 1:3.

THE FORECAST OF RAINFALL EVENTS SHALL TRIGGER IMMEDIATE PROTECTION OF EXPOSED SOILS.

1.4.9 WINTER STABILIZATION
VARIOUS MEASURES SPECIFIC TO WINTER MAY BE NECESSARY SHOULD THE PROJECT EXTEND INTO WINTER (OCTOBER 15 THROUGH APRIL 15). REFER TO THE LOW RISK SITE HANDBOOK FOR GUIDANCE.

1.4.10 STABILIZE SOIL AT FINAL GRADE
EXPOSED SOIL MUST BE STABILIZED WITHIN 48 HOURS OF REACHING FINAL GRADE.

SEED, MULCH, FERTILIZER AND LIME SHALL BE USED TO ESTABLISH PERMANENT VEGETATION. FOR SLOPES STEEPER THAN 1:3, BIODEGRADABLE EROSION CONTROL MATTING OR AN EQUIVALENT SHALL BE USED INSTEAD OF MULCH.

1.4.11 DE-WATERING ACTIVITIES
DISCHARGE FROM DEWATERING ACTIVITIES THAT FLOWS OFF OF THE CONSTRUCTION SITE MUST NOT CAUSE OR CONTRIBUTE TO A VIOLATION OF THE VERMONT WATER QUALITY STANDARDS.

TREATMENT OF DEWATERING COFFERDAM IS NOT ANTICIPATED.

1.4.12 INSPECT YOUR SITE
INSPECT THE PROJECT SITE BASED ON SPECIAL PROVISION REQUIREMENTS OR CONSTRUCTION GENERAL PERMIT AUTHORIZATION STIPULATIONS.

1.5 SEQUENCE AND STAGING

THIS SECTION WILL BE DEVELOPED BY THE CONTRACTOR USING THE GUIDANCE OUTLINED IN THE VTRANS EPSC PLAN CONTRACTOR CHECKLIST.

1.5.1 CONSTRUCTION SEQUENCE

1.5.2 OFF-SITE ACTIVITIES
IN ADDITION TO THE CONTRACTOR CHECKLIST ANY ACTIVITIES OUTSIDE THE CONSTRUCTION LIMITS SHALL FOLLOW SUBSECTIONS 105.25- 105.29 OF THE STANDARD SPECIFICATIONS FOR CONSTRUCTION.

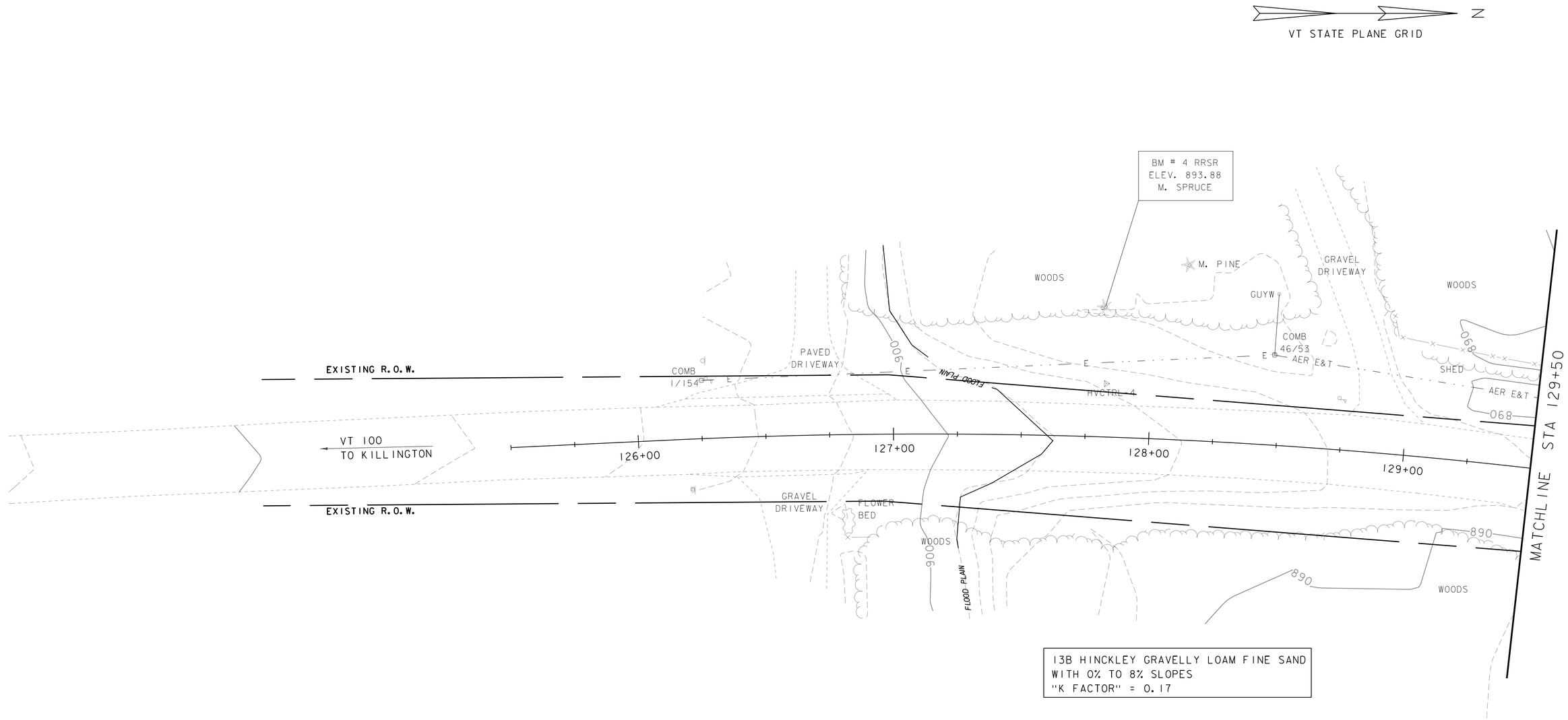

EPSC - EXISTING CONDITIONS 1

SCALE 1" = 20'-0"

20 0 20

PROJECT NAME: PITTSFIELD	
PROJECT NUMBER: ER BRF 022-1(23)	
FILE NAME: s86e060epsc_ex.dgn	PLOT DATE: 18-SEP-2013
PROJECT LEADER: K. HIGGINS	DRAWN BY: K. FRIEDLAND
DESIGNED BY: J. SALVATORI	CHECKED BY: J. SALVATORI
EPSC - EXISTING CONDITIONS 1	SHEET 36 OF 67

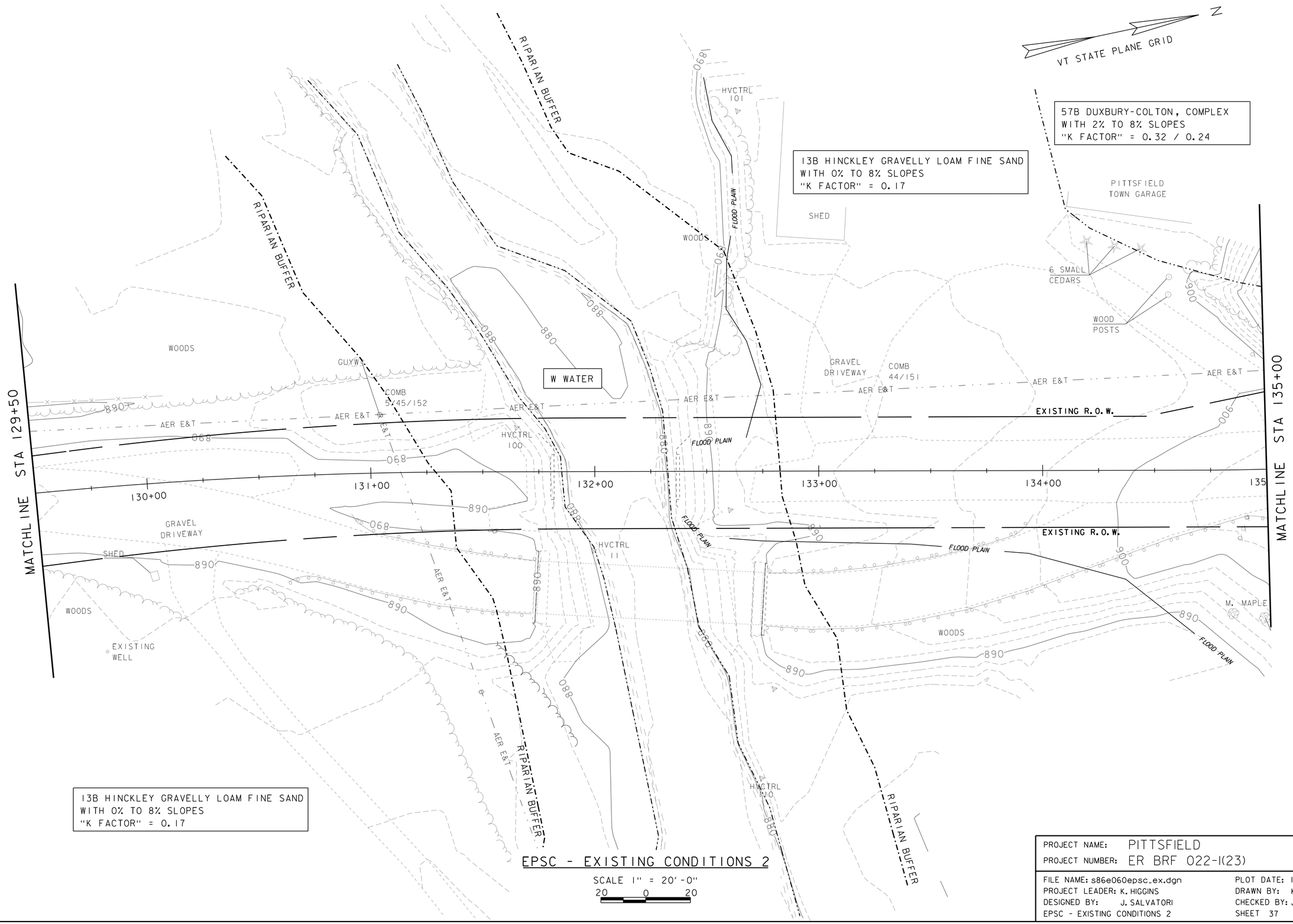

EPSC - EXISTING CONDITIONS 2

SCALE 1" = 20'-0"

20 0 20

PROJECT NAME: PITTSFIELD	
PROJECT NUMBER: ER BRF 022-1(23)	
FILE NAME: s86e060epsc_ex.dgn	PLOT DATE: 18-SEP-2013
PROJECT LEADER: K. HIGGINS	DRAWN BY: K. FRIEDLAND
DESIGNED BY: J. SALVATORI	CHECKED BY: J. SALVATORI
EPSC - EXISTING CONDITIONS 2	SHEET 37 OF 67

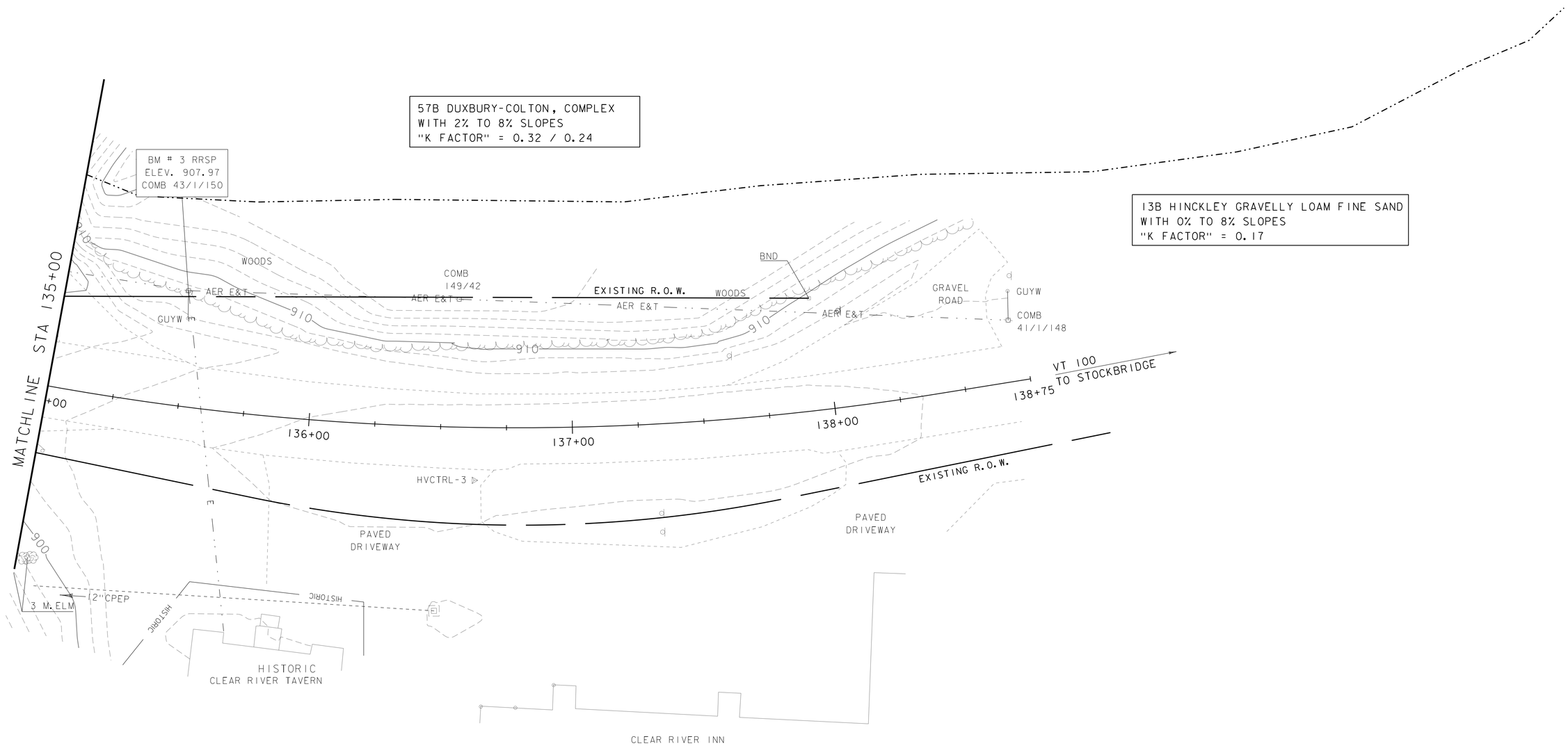

EPSC - EXISTING CONDITIONS 3

SCALE 1" = 20'-0"

20 0 20

PROJECT NAME: PITTSFIELD	
PROJECT NUMBER: ER BRF 022-1(23)	
FILE NAME: s86e060epsc_ex.dgn	PLOT DATE: 18-SEP-2013
PROJECT LEADER: K. HIGGINS	DRAWN BY: K. FRIEDLAND
DESIGNED BY: J. SALVATORI	CHECKED BY: J. SALVATORI
EPSC - EXISTING CONDITIONS 3	SHEET 38 OF 67

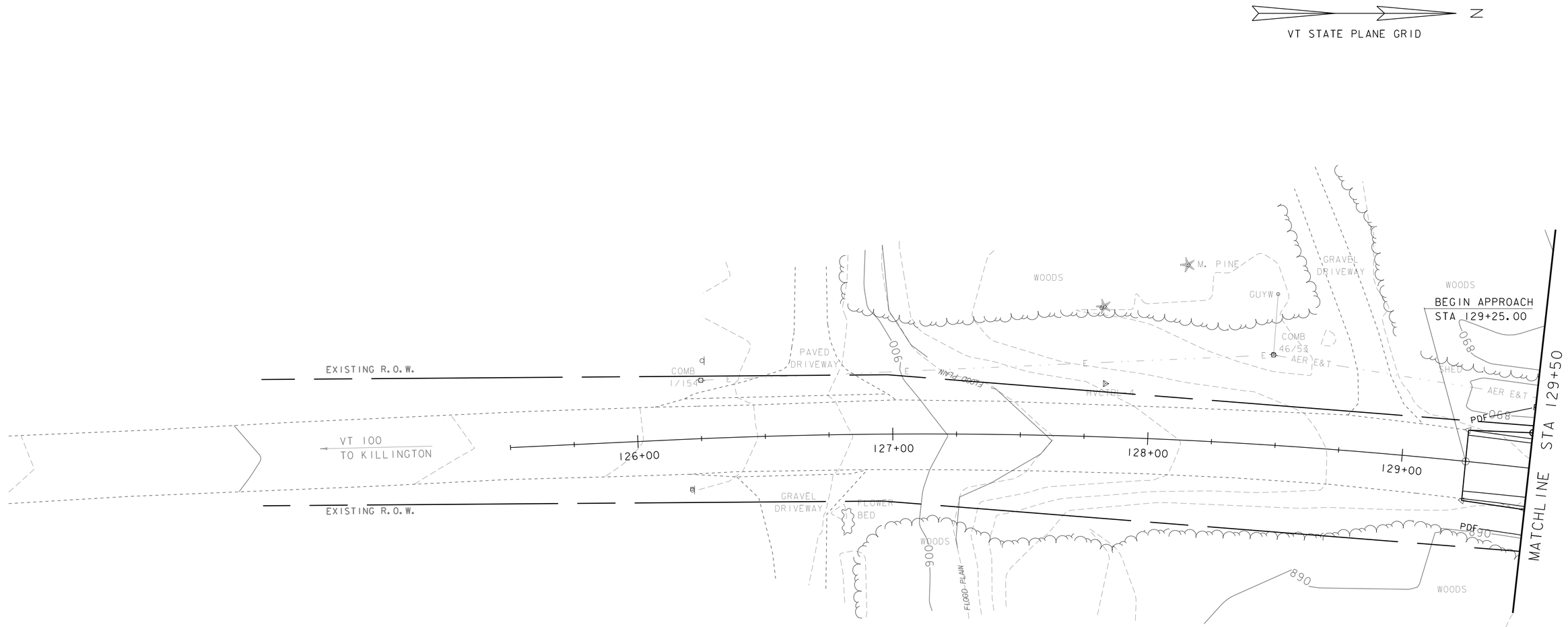

EPSC - DURING CONSTRUCTION 1

SCALE 1" = 20'-0"

20 0 20

PROJECT NAME: PITTSFIELD	
PROJECT NUMBER: ER BRF 022-1(23)	
FILE NAME: s86e060epsc_plan.dgn	PLOT DATE: 18-SEP-2013
PROJECT LEADER: K. HIGGINS	DRAWN BY: K. FRIEDLAND
DESIGNED BY: J. GRIGAS	CHECKED BY: J. SALVATORI
EPSC - DURING CONSTRUCTION 1	SHEET 39 OF 67

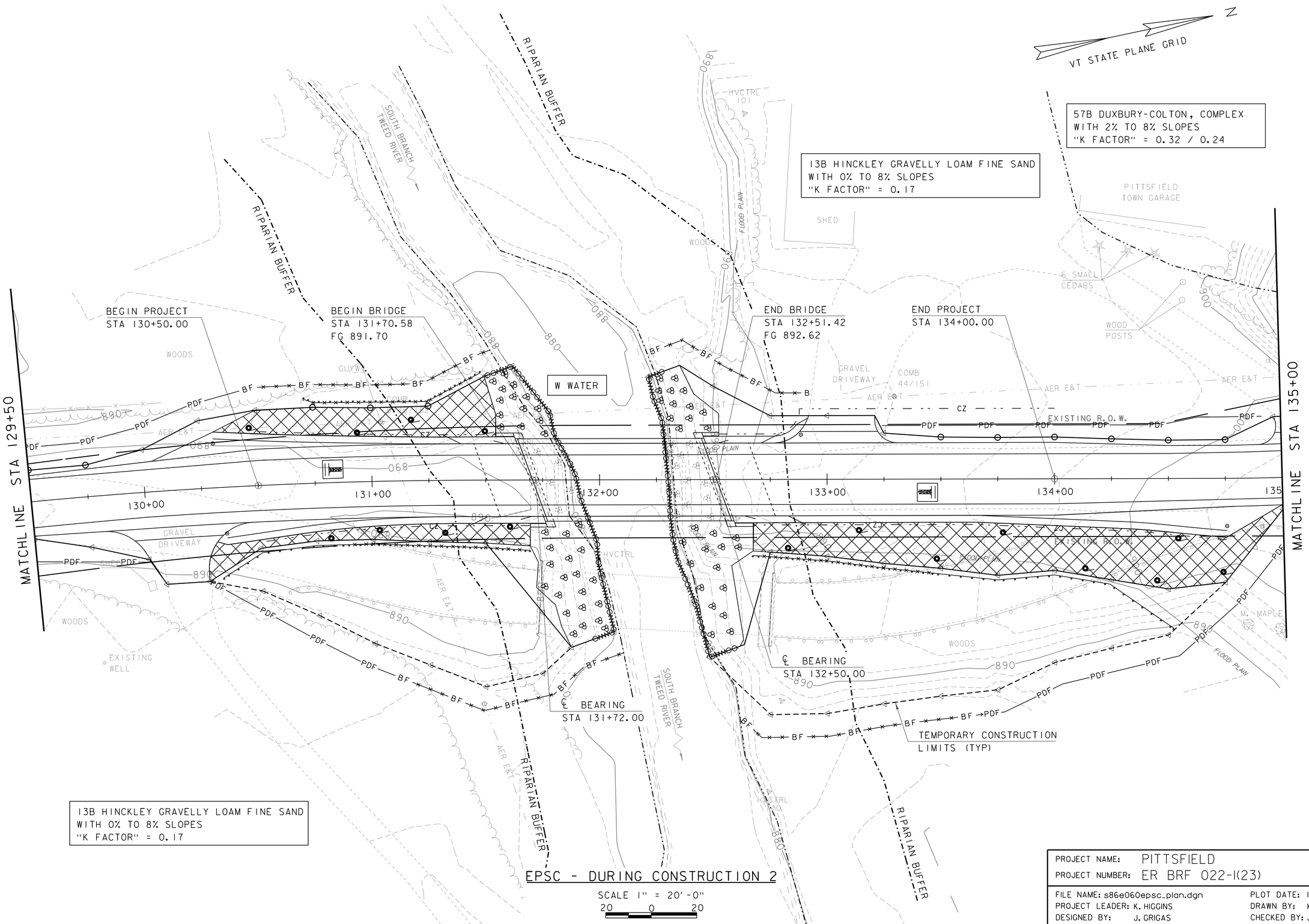

EPSC - DURING CONSTRUCTION 2

SCALE 1" = 20'-0"

20 0 20

PROJECT NAME: PITTSFIELD	
PROJECT NUMBER: ER BRF 022-1(23)	
FILE NAME: s86e060epsc_plan.dgn	PLOT DATE: 18-SEP-2013
PROJECT LEADER: K. HIGGINS	DRAWN BY: K. FRIEDLAND
DESIGNED BY: J. GRIGAS	CHECKED BY: J. SALVATORI
EPSC - DURING CONSTRUCTION 2	SHEET 40 OF 67

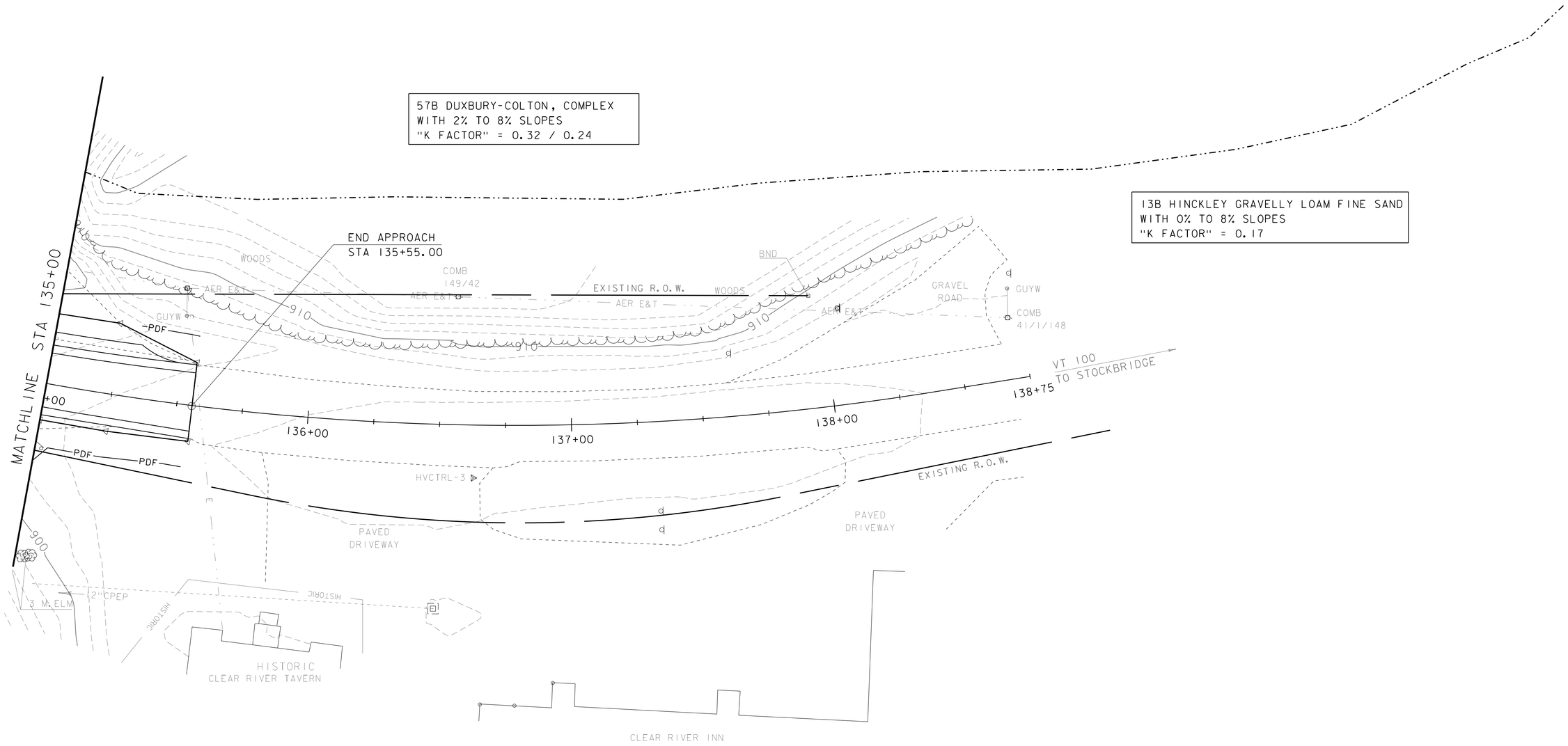

EPSC - DURING CONSTRUCTION 3

SCALE 1" = 20'-0"

20 0 20

PROJECT NAME: PITTSFIELD	
PROJECT NUMBER: ER BRF 022-1(23)	
FILE NAME: s86e060epsc_plan.dgn	PLOT DATE: 18-SEP-2013
PROJECT LEADER: K. HIGGINS	DRAWN BY: K. FRIEDLAND
DESIGNED BY: J. GRIGAS	CHECKED BY: J. SALVATORI
EPSC - DURING CONSTRUCTION 3	SHEET 41 OF 67

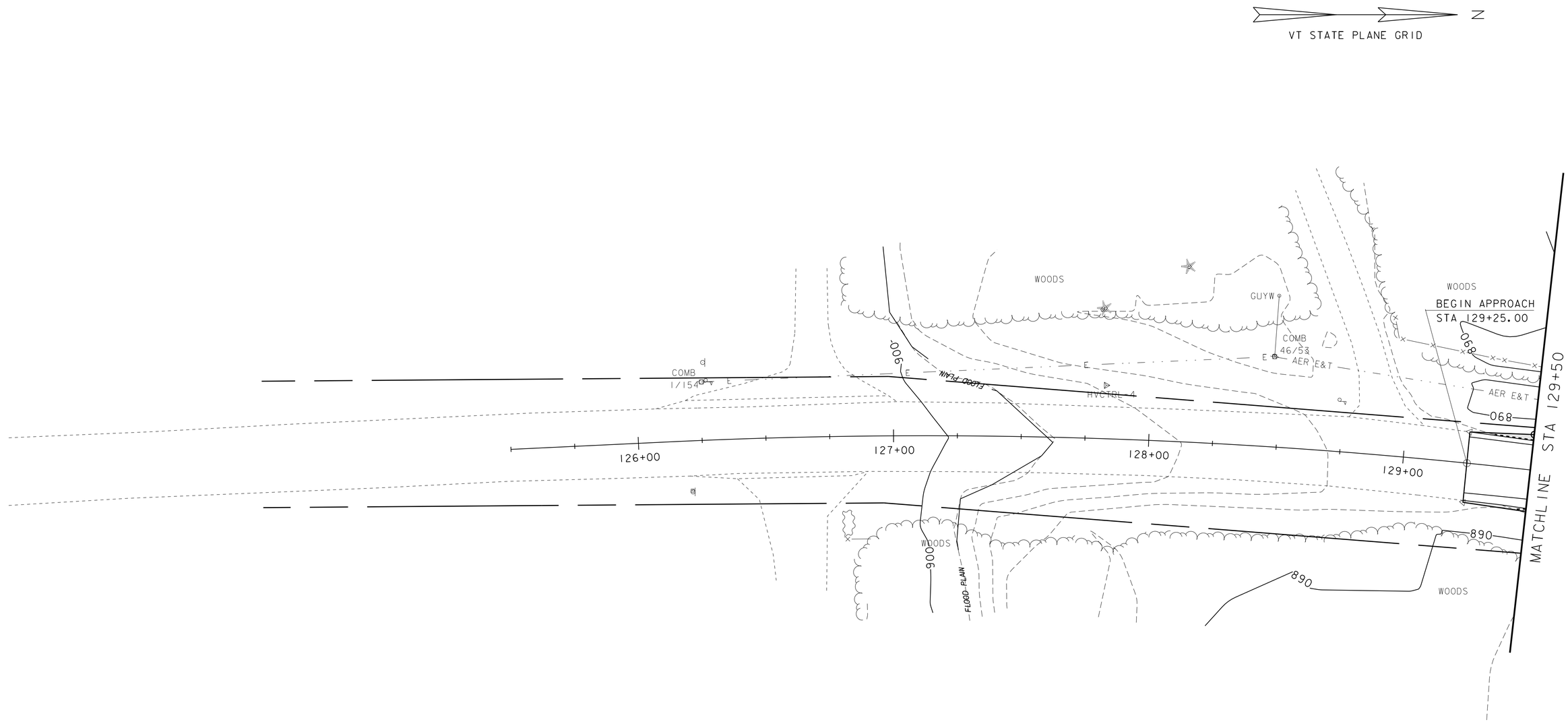

EPSC - FINAL CONDITIONS I

SCALE 1" = 20'-0"

20 0 20

PROJECT NAME: PITTSFIELD	
PROJECT NUMBER: ER BRF 022-1(23)	
FILE NAME: s86e060epsc_fin.dgn	PLOT DATE: 18-SEP-2013
PROJECT LEADER: K. HIGGINS	DRAWN BY: K. FRIEDLAND
DESIGNED BY: J. GRIGAS	CHECKED BY: J. SALVATORI
EPSC - FINAL CONDITIONS I	SHEET 42 OF 67

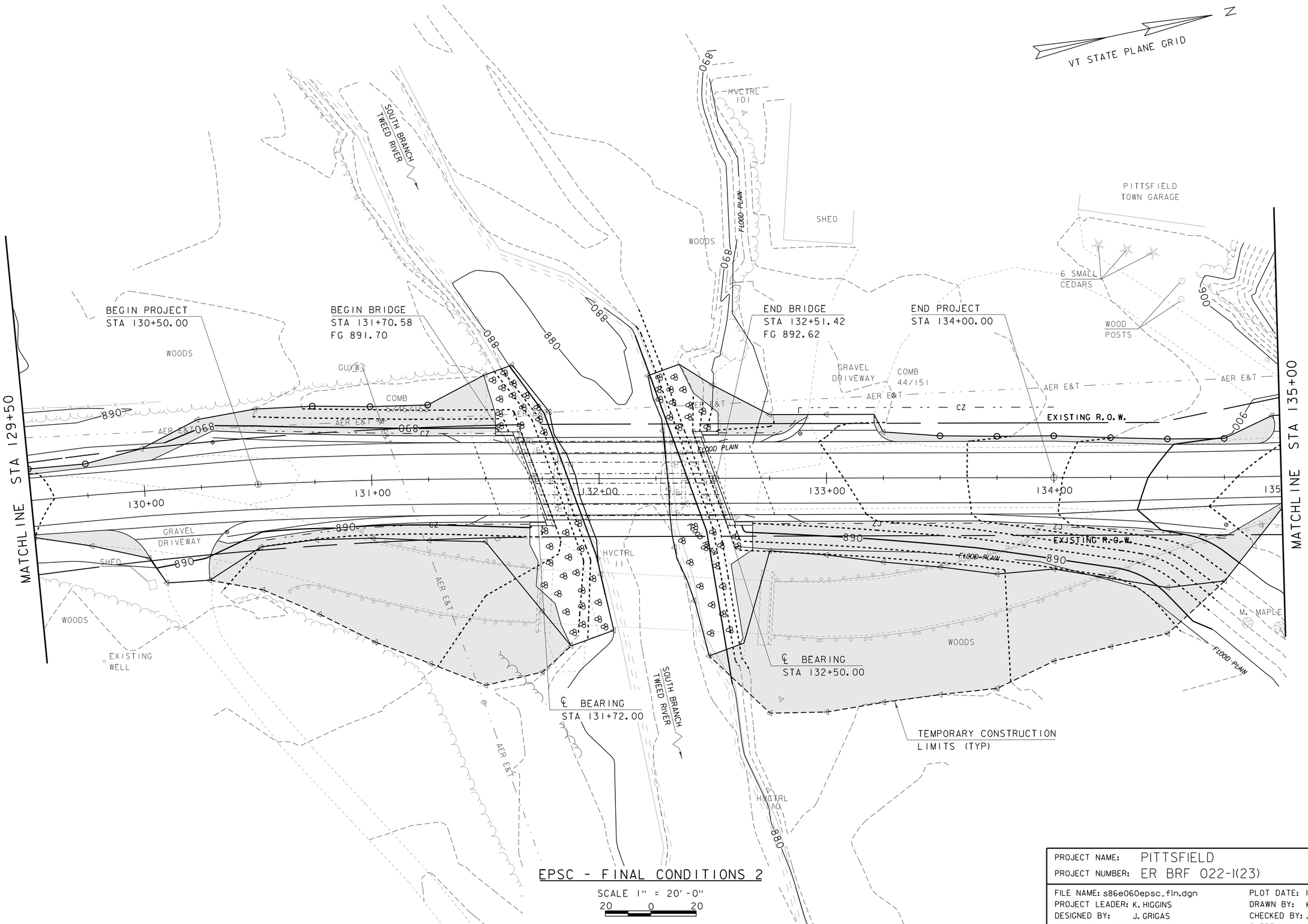

EPSC - FINAL CONDITIONS 2

SCALE 1" = 20'-0"

20 0 20

PROJECT NAME: PITTSFIELD	
PROJECT NUMBER: ER BRF 022-1(23)	
FILE NAME: s86e060epsc_fin.dgn	PLOT DATE: 18-SEP-2013
PROJECT LEADER: K. HIGGINS	DRAWN BY: K. FRIEDLAND
DESIGNED BY: J. GRIGAS	CHECKED BY: J. SALVATORI
EPSC - FINAL CONDITIONS 2	SHEET 43 OF 67

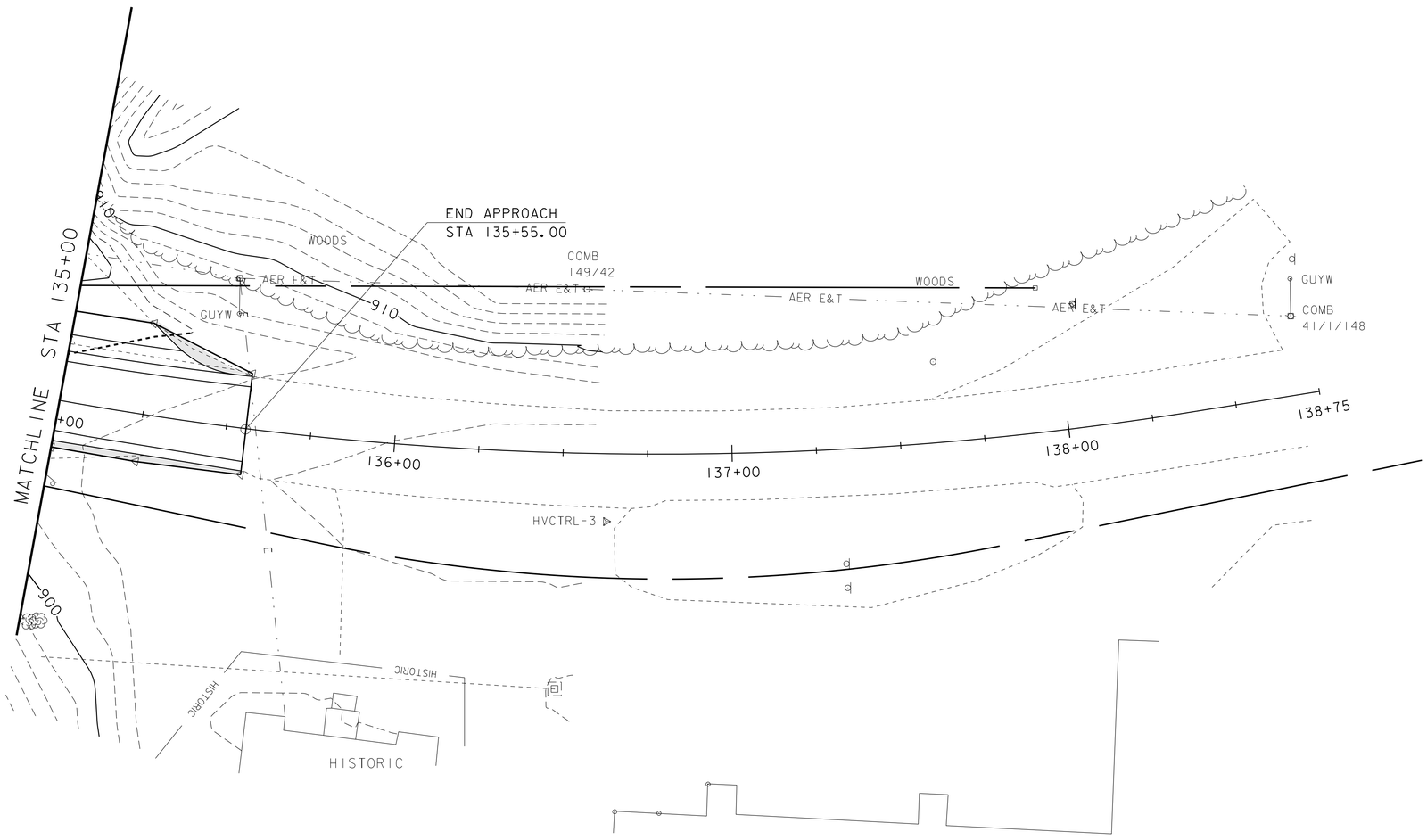

EPSC - FINAL CONDITIONS 3

SCALE 1" = 20'-0"

20 0 20

PROJECT NAME: PITTSFIELD	
PROJECT NUMBER: ER BRF 022-1(23)	
FILE NAME: s86e060epsc_fin.dgn	PLOT DATE: 18-SEP-2013
PROJECT LEADER: K. HIGGINS	DRAWN BY: K. FRIEDLAND
DESIGNED BY: J. GRIGAS	CHECKED BY: J. SALVATORI
EPSC - FINAL CONDITIONS 3	SHEET 44 OF 67

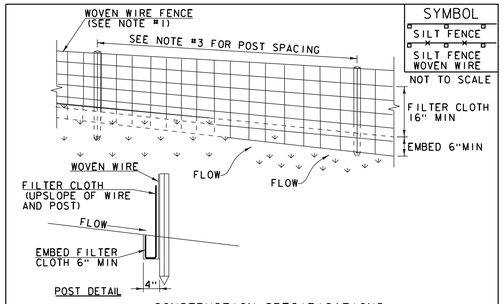

SYMBOL

SILT FENCE

SILT FENCE WOVEN WIRE

NOT TO SCALE

CONSTRUCTION SPECIFICATIONS

1. WOVEN WIRE REINFORCED FENCE IS REQUIRED WITHIN 100' UPSLOPE OF RECEIVING WATERS WHEN THE PROJECT FALLS UNDER A CONSTRUCTION STORMWATER PERMIT. WOVEN WIRE SHALL BE A MIN. 14 GAUGE WITH A 6" MAX. MESH OPENING.
2. FILTER CLOTH SHALL BE EITHER FILTER X, MIRAFI 100X, STABILINKA T140N OR APPROVED EQUIVALENT.
3. POST SPACING FOR WIRE-BACKED FENCE SHALL BE 10' MAXIMUM. FOR FILTER-CLOTH FENCE, WHEN ELONGATION IS >50%, POST SPACING SHALL NOT EXCEED 4' AND WHEN ELONGATION IS <50%, POST SPACING SHALL NOT EXCEED 6'.
4. WOVEN WIRE FENCE IS TO BE FASTENED SECURELY TO FENCE POSTS WITH WIRE TIES. FILTER CLOTH IS TO BE FASTENED SECURELY TO WOVEN WIRE FENCE WITH TIES SPACED EVERY 24" AT TOP AND MID SECTION.
5. WHEN TWO SECTIONS OF FILTER CLOTH ADJOIN EACH OTHER THEY SHALL BE OVER-LAPPED BY 6" AND FOLDED.
6. MAINTENANCE SHALL BE PERFORMED AS NEEDED AND MATERIAL REMOVED WHEN SEDIMENT REACHES HALF OF FABRIC HEIGHT.

ADAPTED FROM DETAILS PROVIDED BY: NEW YORK STATE DEC
ORIGINALLY DEVELOPED BY USDA-NRCS
VERMONT DEPARTMENT OF ENVIRONMENTAL CONSERVATION

SILT FENCE

NOTES:
REFER TO "THE VERMONT STANDARDS & SPECIFICATIONS FOR EROSION PREVENTION & SEDIMENT CONTROL -2006- " FROM THE VT AGENCY OF NATURAL RESOURCES FOR ADDITIONAL GUIDANCE.

THIS WORK SHALL BE PERFORMED IN ACCORDANCE WITH SECTION 649 AND AS SHOWN IN THE PLANS FOR GEOTEXTILE FOR SILT FENCE (PAY ITEM 649.51) OR GEOTEXTILE FOR SILT FENCE, WOVEN WIRE REINFORCED (PAY ITEM 649.515).

REVISIONS	
MARCH 21, 2008	WHF
DECEMBER 11, 2008	WHF
JANUARY 13, 2009	WHF

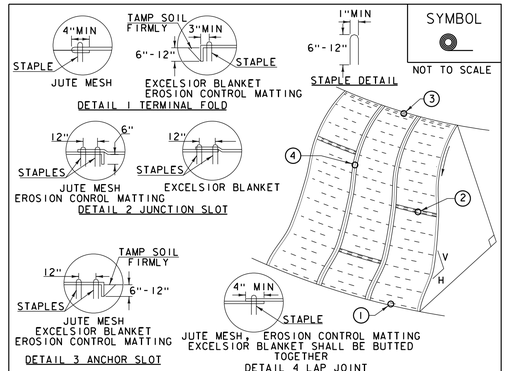

SYMBOL

NOT TO SCALE

CONSTRUCTION SPECIFICATIONS

1. APPLY TO SLOPES GREATER THAN 3H: 1V OR WHERE NECESSARY TO AID IN ESTABLISHING VEGETATION.
2. APPLY FERTILIZER, LIME SEED PRIOR TO PLACING MATTING.
3. STAPLES ARE TO BE PLACED ALTERNATELY, IN COLUMNS APPROXIMATELY 2' APART AND IN ROWS APPROXIMATELY 3' APART. APPROXIMATELY 175 STAPLES ARE REQUIRED PER 4'X225' ROLL OF MATERIAL AND 125 STAPLES ARE REQUIRED PER 4'X150' ROLL OF MATERIAL.
4. DISTURBED AREAS SHALL BE SMOOTHLY GRADED. EROSION CONTROL MATERIAL SHALL BE PLACED LOOSELY OVER GROUND SURFACE. DO NOT STRETCH.
5. ALL TERMINAL ENDS AND TRANSVERSE LAPS SHALL BE STAPLED AT APPROXIMATELY 12" INTERVALS.

ADAPTED FROM DETAILS PROVIDED BY: NEW YORK STATE DEC
ORIGINALLY DEVELOPED BY USDA-NRCS
VERMONT DEPARTMENT OF ENVIRONMENTAL CONSERVATION

ROLLED EROSION CONTROL PRODUCT (RECP) SIDE SLOPE

NOTES:
REFER TO "THE VERMONT STANDARDS & SPECIFICATIONS FOR EROSION PREVENTION & SEDIMENT CONTROL -2006- " FROM THE VT AGENCY OF NATURAL RESOURCES FOR ADDITIONAL GUIDANCE.
THIS WORK SHALL BE PERFORMED IN ACCORDANCE WITH SECTION 653 AND AS SHOWN IN THE PLANS FOR TEMPORARY EROSION MATTING (PAY ITEM 653.20) ~~OR PERMANENT EROSION MATTING (PAY ITEM 653.21).~~

REVISIONS	
APRIL 16, 2007	JMF
JANUARY 13, 2009	WHF

VAOT RURAL AREA MIX

% WEIGHT	LBS/AC BROADCAST	LBS/AC HYDROSEED	NAME	GERM %	PURITY %
37.5%	22.5	45	CREEPING RED FESCUE	85%	98%
37.5%	22.5	45	TALL FESCUE	90%	95%
5.0%	3	6	RED TOP	90%	95%
15.0%	9	18	BIRDSFOOT TREFOIL	85%	98%
5.0%	3	6	ANNUAL RYE GRASS	85%	95%
100%	60	120			

VAOT URBAN AREA MIX

% WEIGHT	LBS/AC BROADCAST	LBS/AC HYDROSEED	NAME	GERM %	PURITY %
42.5%	34	68	CREEPING RED FESCUE	85%	98%
10.0%	8	16	PERENNIAL RYE GRASS	90%	95%
42.5%	34	68	KENTUCKY BLUE GRASS	85%	85%
5.0%	4	8	ANNUAL RYE GRASS	85%	95%
100%	80	160			

SOIL AMENDMENT GUIDANCE

FERTILIZER BROADCAST	FERTILIZER HYDROSEED	LIME BROADCAST	LIME HYDROSEED
10-20-10	*FOLLOW*	PELLETIZED	*FOLLOW*
500 LBS/AC	*MANUFACTURER*	2 TONS/AC	*MANUFACTURER*

CONSTRUCTION GUIDANCE

1. RURAL SEED MIX: USE AS INDICATED IN THE PLANS AND/OR FOR ALL ESTABLISHED UPLAND (NON WETLAND) AREAS DISTURBED BY THE CONTRACTOR.
2. URBAN SEED MIX: USE AS INDICATED IN THE PLANS AND/OR FOR ALL ESTABLISHED LAWN AREAS DISTURBED BY THE CONTRACTOR.
3. ALL SEED MIXTURES: SHALL NOT HAVE A WEED CONTENT EXCEEDING 0.40% BY WEIGHT AND SHALL BE FREE OF ALL NOXIOUS SEED.
4. FERTILIZER AND LIMESTONE: SHALL FOLLOW RATES SHOWN ON PLAN OR AS DIRECTED BY THE ENGINEER
5. HAY MULCH: TO BE PLACED ON EARTH SLOPES AT THE RATE OF 2 TONS/ACRE, ACHIEVE 90% GROUND COVER OR AS DIRECTED BY THE ENGINEER.
6. TOPSOIL: TO BE USED WITH SEED AS INDICATED ON THE PLANS, OR AS DIRECTED BY THE ENGINEER.
7. HYDROSEEDING: ALTHOUGH GUIDANCE IS GIVEN ABOVE THE SITE CONDITIONS AND THE TYPE OF HYDROSEED WILL ULTIMATELY DICTATE THE AMOUNTS AND TYPES OF SOIL AMENDMENTS TO BE APPLIED
8. TURF ESTABLISHMENT: PLACING SEED, FERTILIZER, LIME AND MULCH PRIOR TO SEPTEMBER 15 AND AFTER APRIL 15 CAN BETTER ENSURE A VIGOROUS GROWTH OF GRASS.

ADAPTED FROM VTRANS TECHNICAL LANDSCAPE MANUAL FOR ROADWAYS AND TRANSPORTATION FACILITIES

TURF ESTABLISHMENT

REVISIONS	
JUNE 23, 2009	WHF
JANUARY 15, 2010	WHF
FEBRUARY 16, 2011	WHF

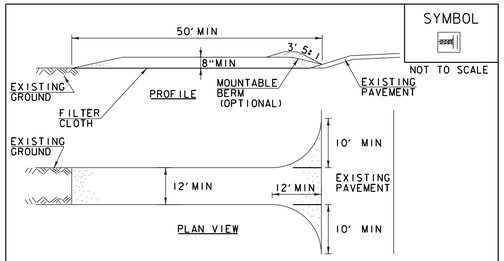

SYMBOL

NOT TO SCALE

CONSTRUCTION SPECIFICATIONS

1. STONE SIZE- USE 1-4" STONE, RECLAIMED OR RECYCLED CONCRETE EQUIVALENT.
2. LENGTH- NOT LESS THAN 50' (EXCEPT ON A SINGLE RESIDENCE LOT WHERE A 30' MINIMUM LENGTH APPLIES).
3. THICKNESS- NOT LESS THAN 8".
4. WIDTH- 12' MINIMUM, BUT NOT LESS THAN THE FULL WIDTH AT POINTS WHERE INGRESS OR EGRESS OCCURS. 24' IF SINGLE ENTRANCE TO SITE.
5. GEOTEXTILE MUST BE PLACED OVER THE ENTIRE AREA PRIOR TO PLACING STONE.
6. SURFACE WATER- ALL SURFACE WATER FLOWING OR DIVERTED TOWARD CONSTRUCTION ENTRANCES SHALL BE PIPED BENEATH THE ENTRANCE. IF PIPING IS IMPRACTICAL, A MOUNTABLE BERM WITH 5:1 SLOPES WILL BE PERMITTED.
7. MAINTENANCE- THE ENTRANCE SHALL BE MAINTAINED IN A CONDITION WHICH WILL PREVENT TRACKING OR FLOWING OF SEDIMENT ONTO PUBLIC RIGHTS-OF-WAY, ALL SEDIMENT SPILLED, DROPPED, WASHED OR TRACKED ONTO PUBLIC RIGHTS-OF-WAY MUST BE REMOVED IMMEDIATELY.
8. WHEN WASHING IS REQUIRED, IT SHALL BE DONE ON AN AREA STABILIZED WITH STONE AND WHICH DRAINS INTO AN APPROVED SEDIMENT TRAPPING DEVICE.
9. PERIODIC INSPECTION AND NEEDED MAINTENANCE SHALL BE PROVIDED ACCORDING TO PERMIT REQUIREMENTS.

ADAPTED FROM DETAILS PROVIDED BY: NEW YORK STATE DEC
ORIGINALLY DEVELOPED BY USDA-NRCS
VERMONT DEPARTMENT OF ENVIRONMENTAL CONSERVATION

STABILIZED CONSTRUCTION ENTRANCE

NOTES:
REFER TO "THE VERMONT STANDARDS & SPECIFICATIONS FOR EROSION PREVENTION & SEDIMENT CONTROL -2006- " FROM THE VT AGENCY OF NATURAL RESOURCES FOR ADDITIONAL GUIDANCE.

THIS WORK SHALL BE PERFORMED IN ACCORDANCE WITH SECTION 653 FOR VEHICLE TRACKING PAD (PAY ITEM 653.35) OR AS SPECIFIED IN THE CONTRACT.

REVISIONS	
MARCH 24, 2008	WHF
JANUARY 13, 2009	WHF

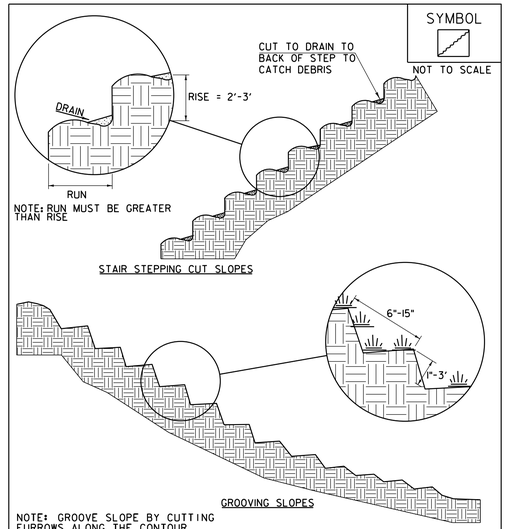

SYMBOL

NOT TO SCALE

NOTE: GROOVE SLOPE BY CUTTING FURROWS ALONG THE CONTOUR. IRREGULARITIES IN THE SOIL SURFACE CATCH RAINWATER AND RETAIN LIME, FERTILIZER AND SEED.

ADAPTED FROM DETAILS PROVIDED BY: NEW YORK STATE DEC
ORIGINALLY DEVELOPED BY USDA-NRCS
VERMONT DEPARTMENT OF ENVIRONMENTAL CONSERVATION

SURFACE ROUGHENING

NOTES:
REFER TO "THE VERMONT STANDARDS & SPECIFICATIONS FOR EROSION PREVENTION & SEDIMENT CONTROL -2006- " FROM THE VT AGENCY OF NATURAL RESOURCES FOR ADDITIONAL GUIDANCE.

THIS WORK SHALL BE CONSIDERED INCIDENTAL TO THE CONTRACT

REVISIONS	
APRIL 1, 2008	WHF
JANUARY 13, 2009	WHF

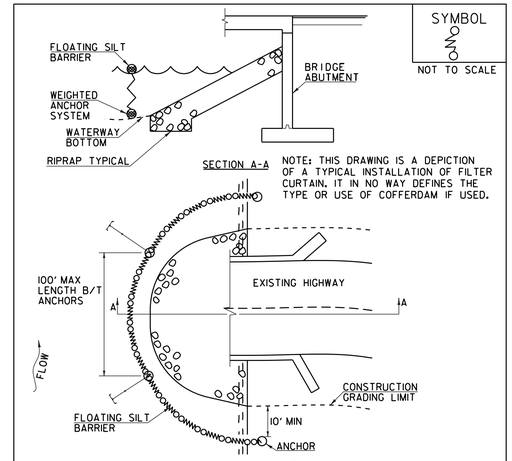

SYMBOL

NOT TO SCALE

NOTE: THIS DRAWING IS A DEPICTION OF A TYPICAL INSTALLATION OF FILTER CURTAIN. IT IN NO WAY DEFINES THE TYPE OR USE OF COFFERDAM IF USED.

CONSTRUCTION SPECIFICATIONS

1. FILTER CURTAIN SHALL NOT BE PLACED ACROSS A FLOWING WATERWAY, OR IN A WATERWAY WITH STREAM VELOCITIES GREATER THAN 1.5 FEET/SECOND.
2. MAXIMUM 100' LENGTH BETWEEN ANCHORS.
3. LAST SECTION SHALL TERMINATE A MINIMUM OF 10' BEYOND LIMIT OF DISTURBANCE.
4. THE WEIGHTED ANCHOR SYSTEM SHALL BE A TYPE WHICH ALLOWS THE CURTAIN TO CONFORM TO THE BOTTOM OF THE WATERWAY.
5. THE CURTAIN SHALL BE REMOVED BY SLOWLY PULLING TOWARD THE SHORE MINIMIZING THE ESCAPE OF SEDIMENTS INTO WATERWAY.

FILTER CURTAIN

THIS WORK SHALL BE PERFORMED IN ACCORDANCE WITH SECTION 649 FOR GEOTEXTILE FOR FILTER CURTAIN (PAY ITEM 649.61).

REVISIONS	
APRIL 1, 2008	WHF
JANUARY 13, 2009	WHF
SEPTEMBER 4, 2009	WHF

PROJECT NAME: PITTSFIELD
PROJECT NUMBER: ER BRF 022-1(23)

FILE NAME: s86e060epsc.details.dgn
PROJECT LEADER: K. HIGGINS
DESIGNED BY: J. SALVATORI
EPSC DETAILS

PLOT DATE: 18-SEP-2013
DRAWN BY: K. FRIEDLAND
CHECKED BY: J. SALVATORI
SHEET 45 OF 67

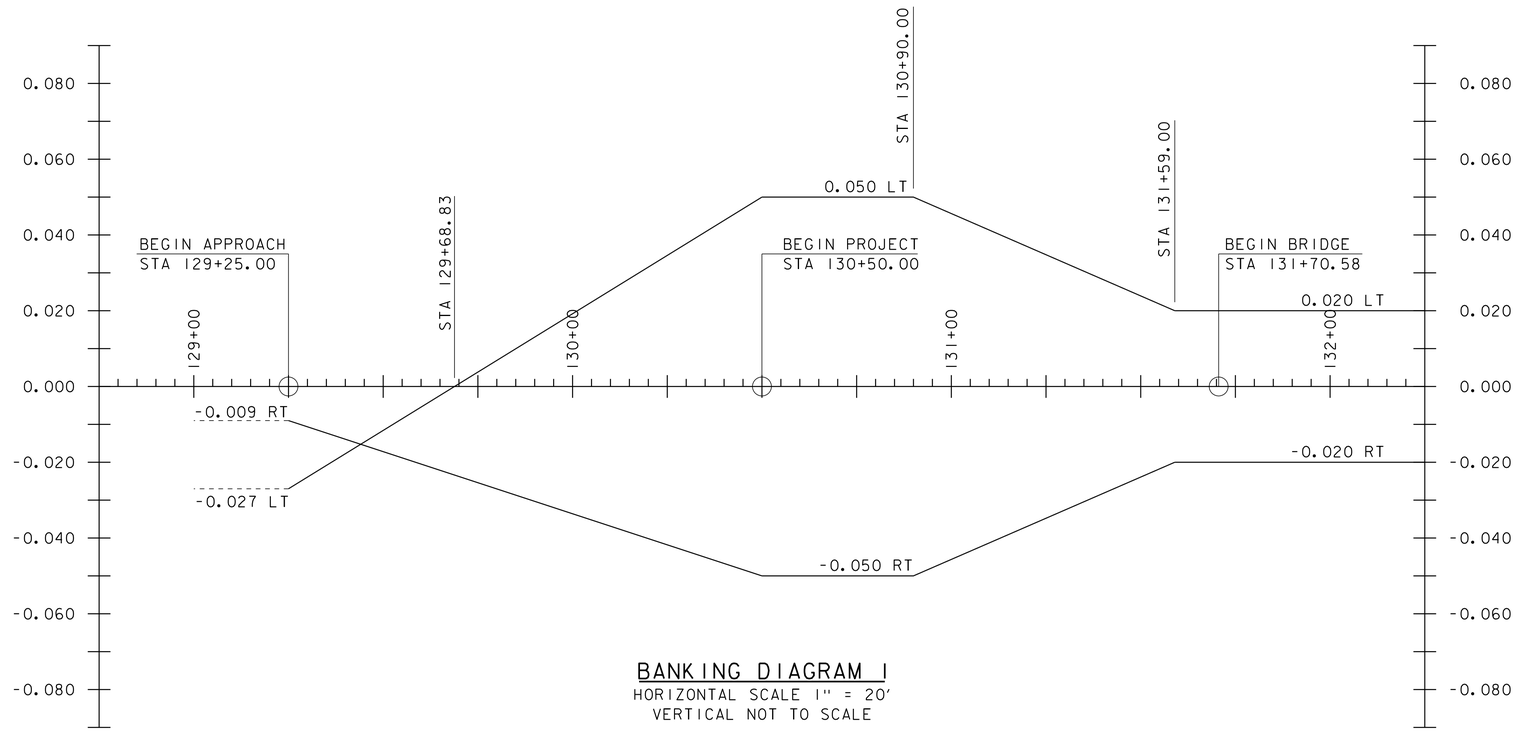

BANKING DIAGRAM 1
HORIZONTAL SCALE 1" = 20'
VERTICAL NOT TO SCALE

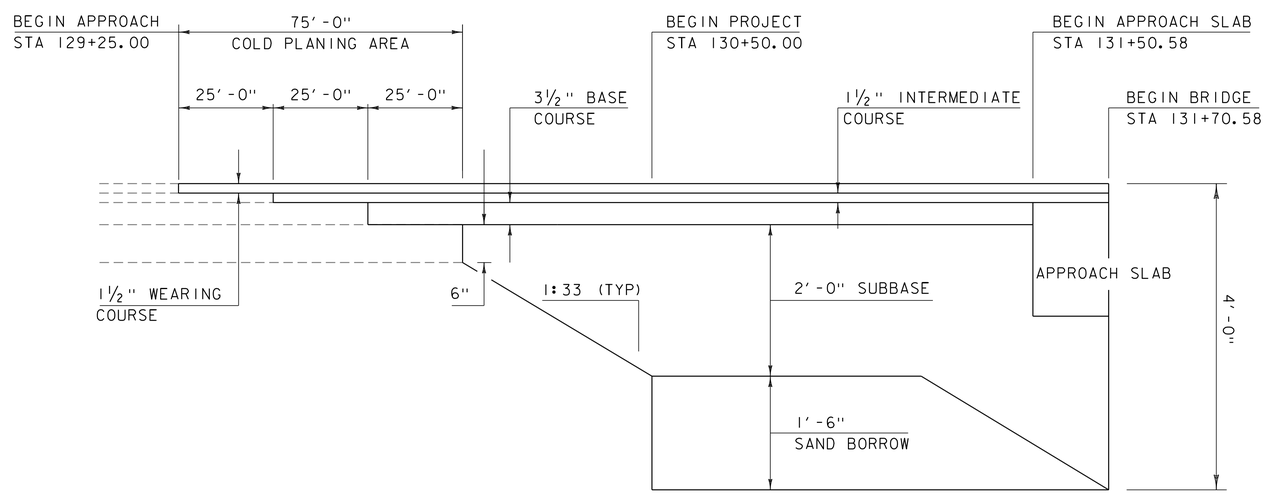

MATERIAL TRANSITION DIAGRAM 1
HOR. SCALE 1" = 20'
NO VERT. SCALE

PROJECT NAME: PITTSFIELD	
PROJECT NUMBER: ER BRF 022-1(23)	
FILE NAME: s86e060xs.dgn	PLOT DATE: 02-OCT-2013
PROJECT LEADER: K. HIGGINS	DRAWN BY: K. FRIEDLAND
DESIGNED BY: J. SALVATORI	CHECKED BY: J. GRIGAS
BANKING/MATERIAL TRANSITION 1	SHEET 46 OF 67

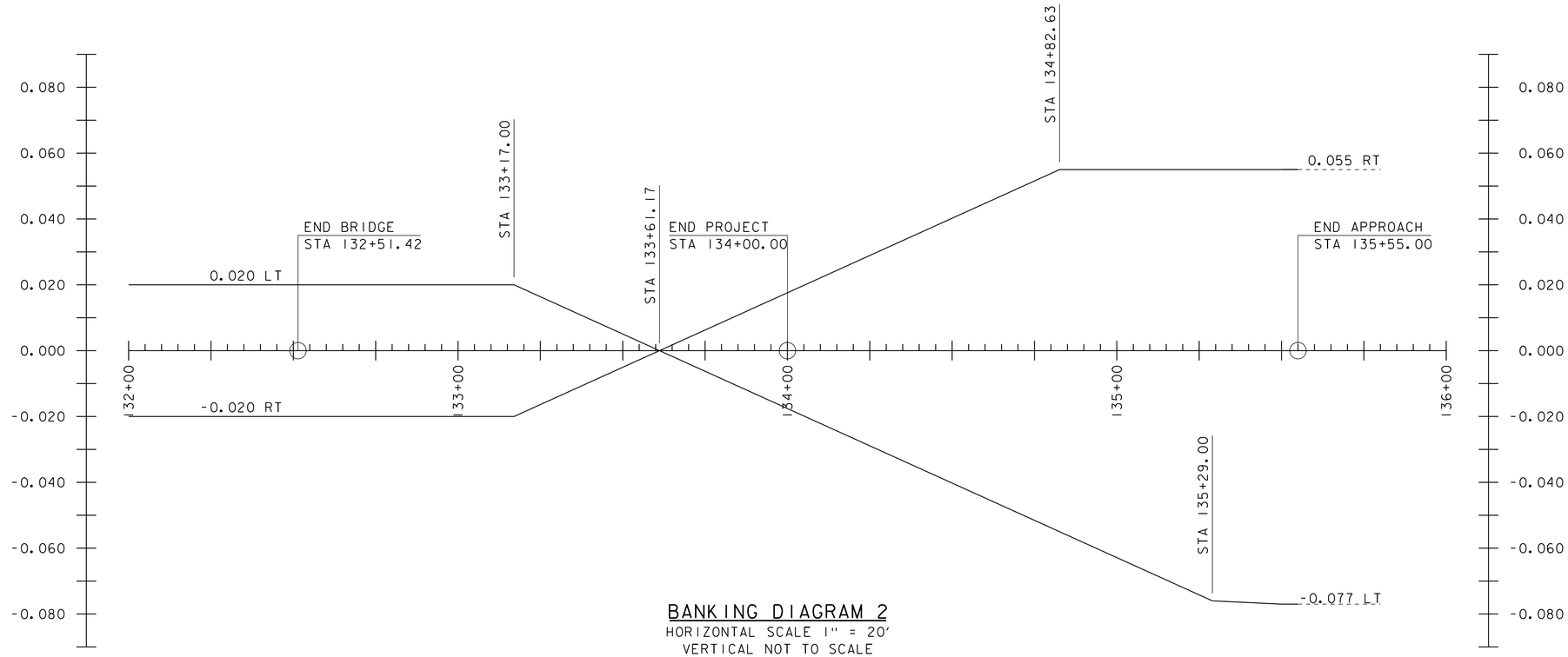

BANKING DIAGRAM 2
HORIZONTAL SCALE 1" = 20'
VERTICAL NOT TO SCALE

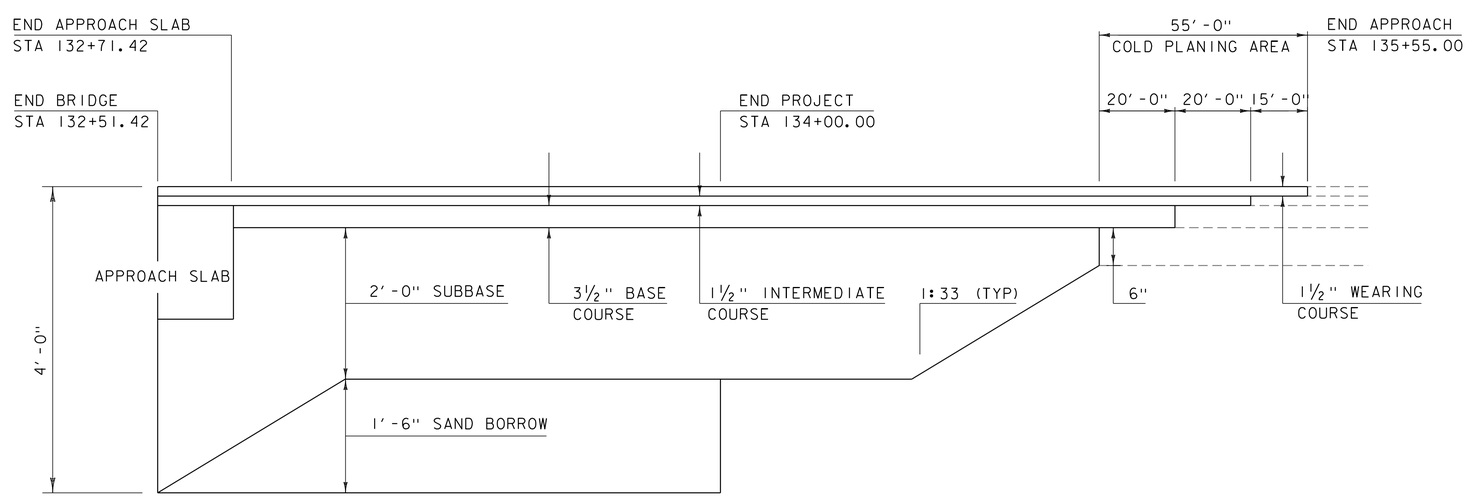

MATERIAL TRANSITION DIAGRAM 1
HOR. SCALE 1" = 20'
NO VERT. SCALE

PROJECT NAME: PITTSFIELD	
PROJECT NUMBER: ER BRF 022-1(23)	
FILE NAME: s86e060xs.dgn	PLOT DATE: 02-OCT-2013
PROJECT LEADER: K. HIGGINS	DRAWN BY: K. FRIEDLAND
DESIGNED BY: J. SALVATORI	CHECKED BY: J. GRIGAS
BANKING/MATERIAL TRANSITION 2	SHEET 47 OF 67

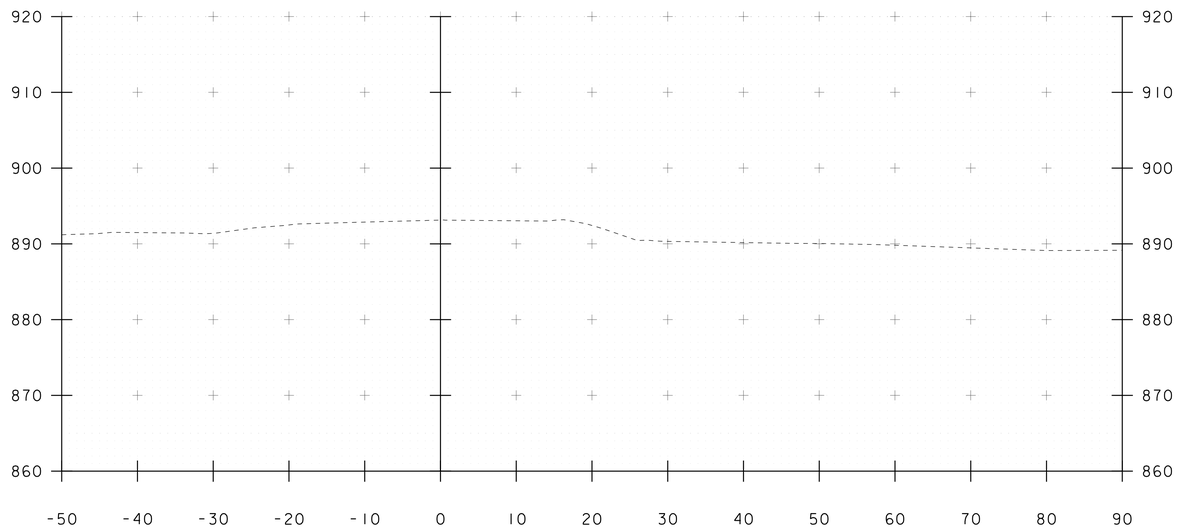

129+00

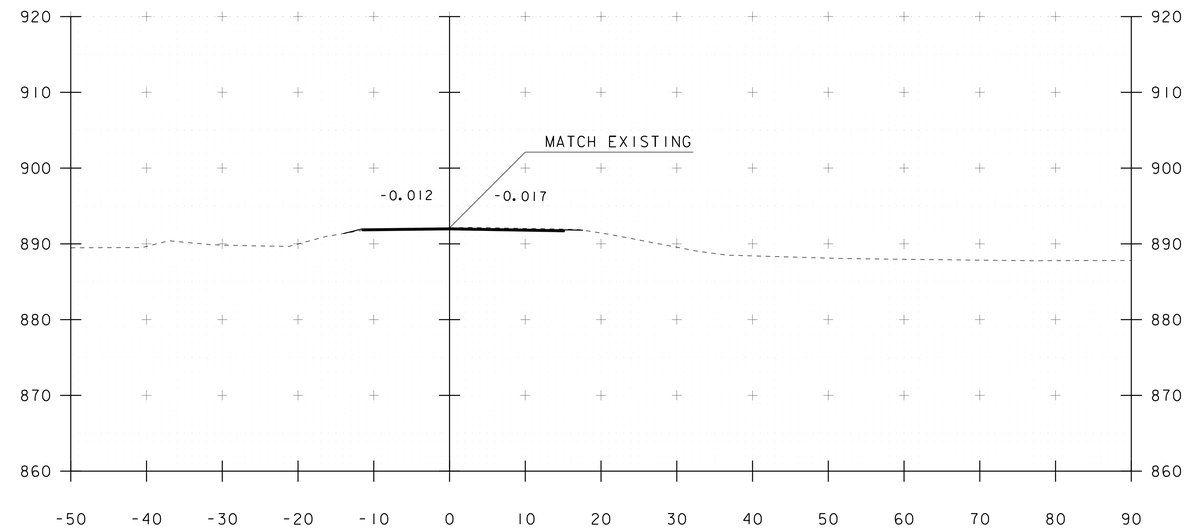

129+50

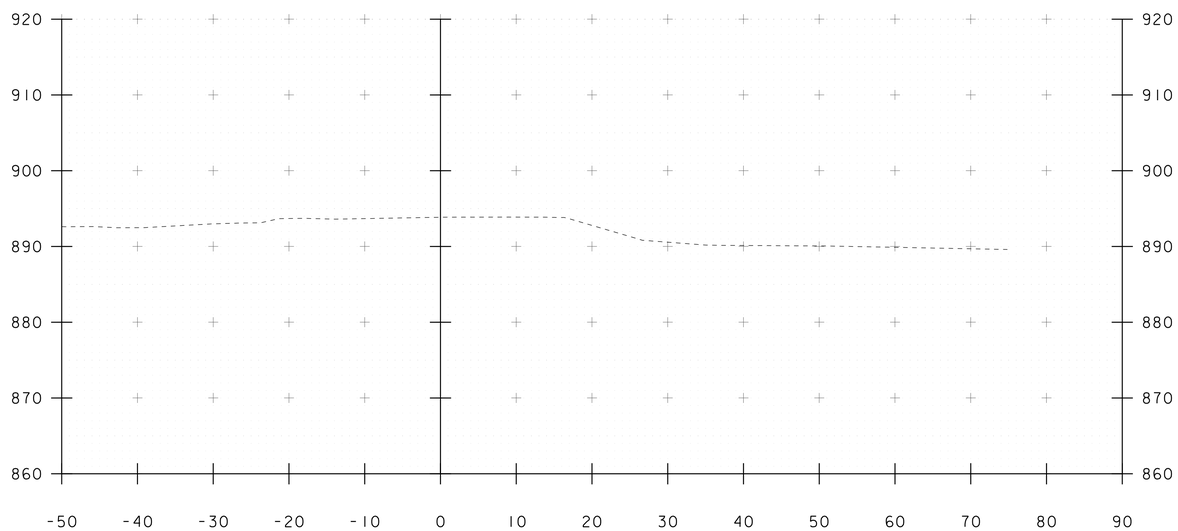

128+75

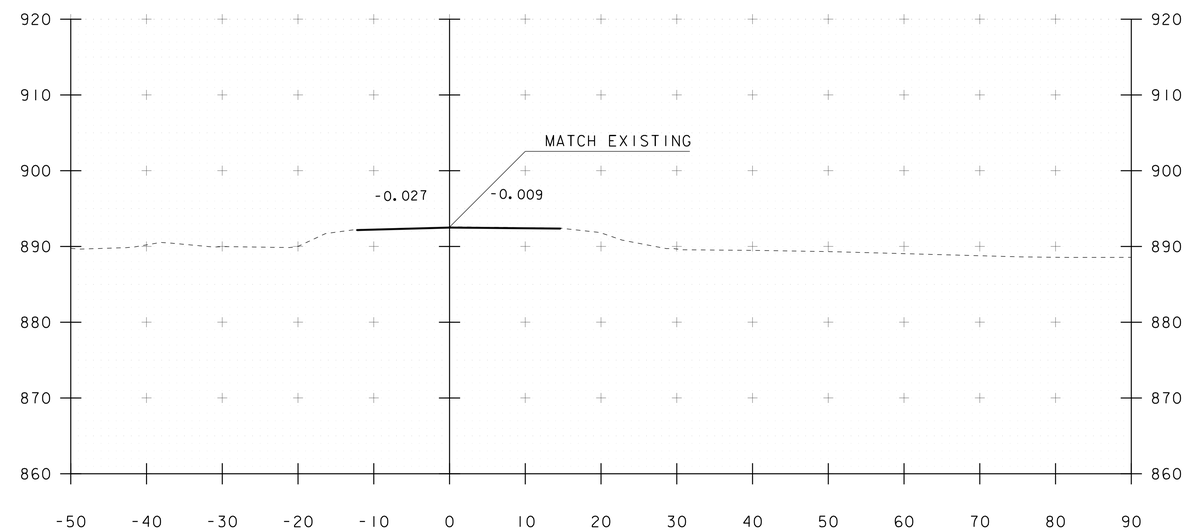

BEGIN APPROACH
129+25

STA. 128+75 TO STA. 129+50

PROJECT NAME: PITTSFIELD	
PROJECT NUMBER: ER BRF 022-1(23)	
FILE NAME: s86e060xs.dgn	PLOT DATE: 18-SEP-2013
PROJECT LEADER: K. HIGGINS	DRAWN BY: J. GRIGAS
DESIGNED BY: J. GRIGAS	CHECKED BY: J. SALVATORI
MAINLINE SECTIONS 1	SHEET 48 OF 67

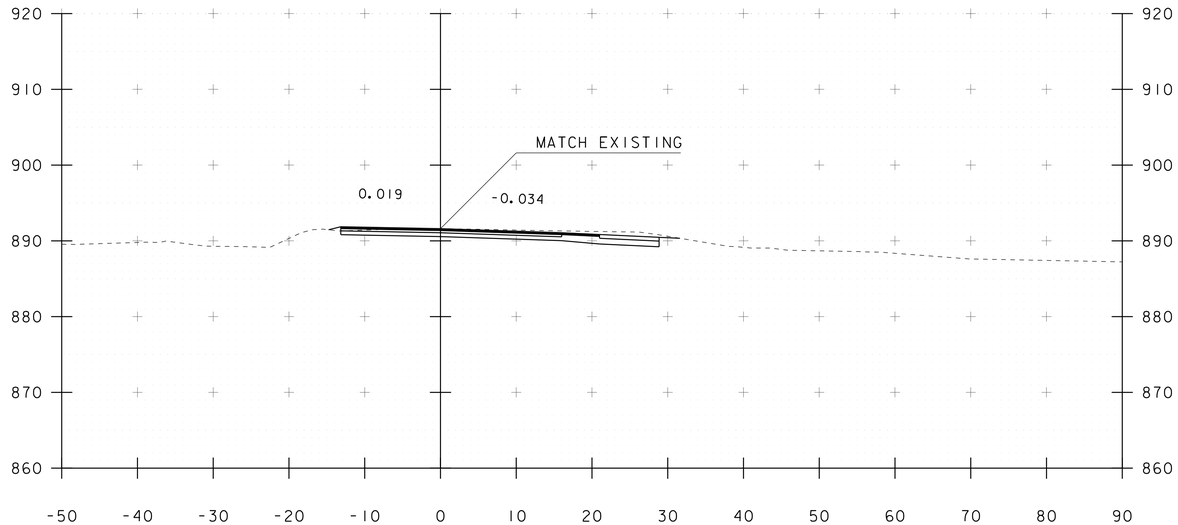

130+00

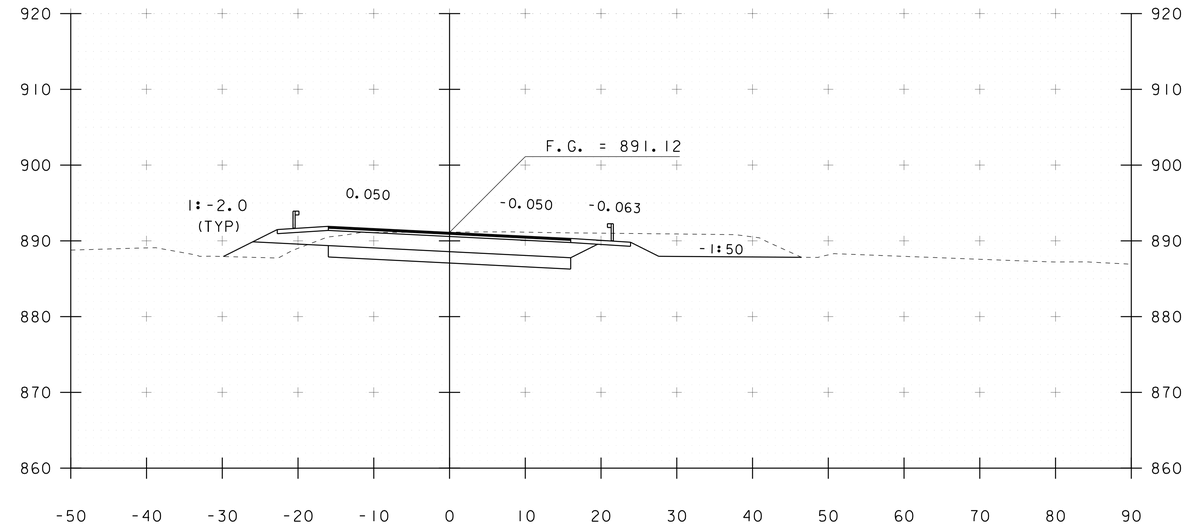

130+50
BEGIN PROJECT

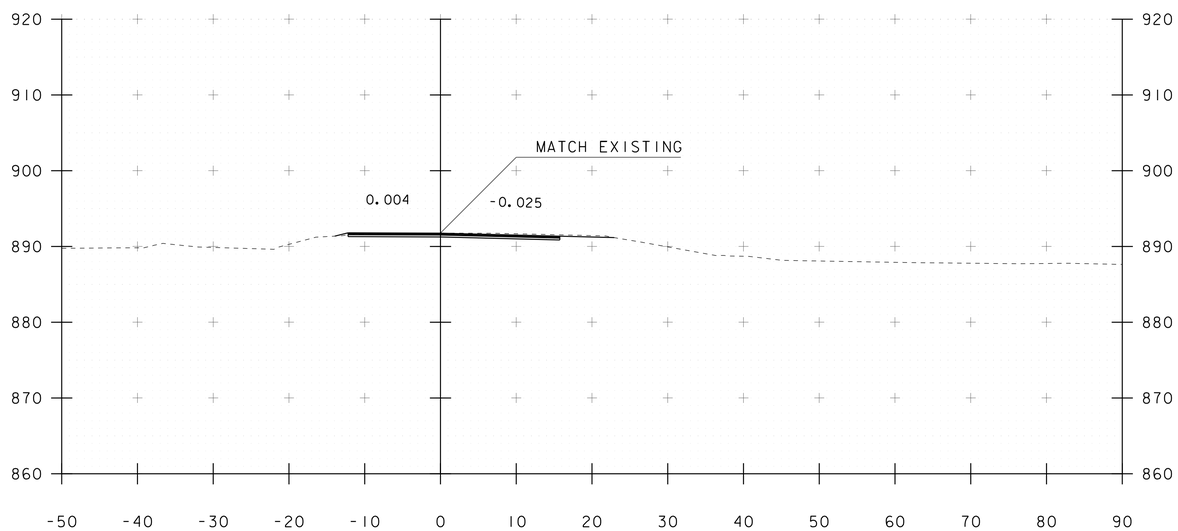

129+75

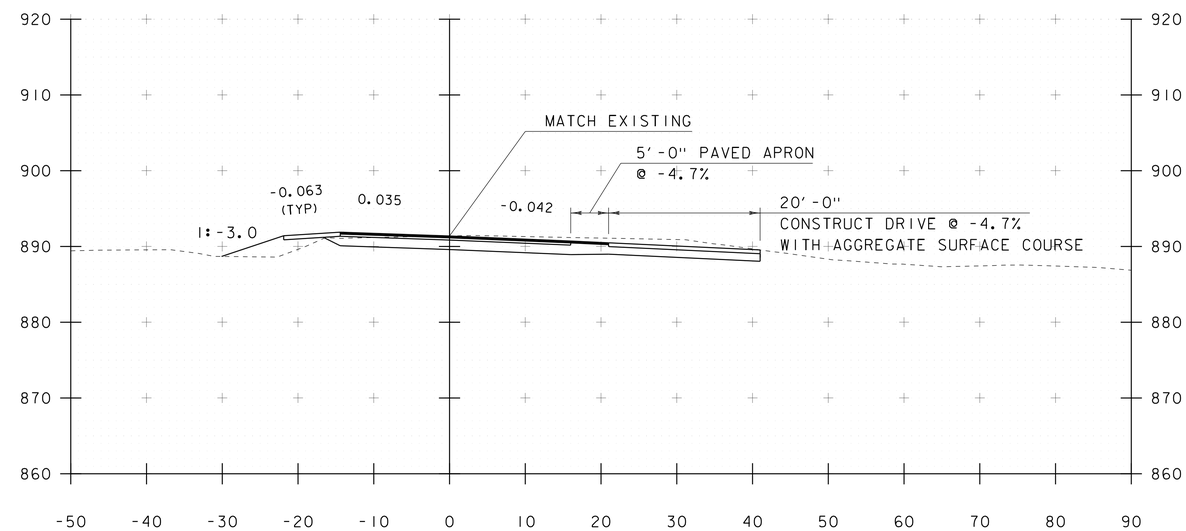

130+25

STA. 129+75 TO STA. 130+50

PROJECT NAME: PITTSFIELD	
PROJECT NUMBER: ER BRF 022-1(23)	
FILE NAME: s86e060xs.dgn	PLOT DATE: 18-SEP-2013
PROJECT LEADER: K. HIGGINS	DRAWN BY: J. GRIGAS
DESIGNED BY: J. GRIGAS	CHECKED BY: J. SALVATORI
MAINLINE SECTIONS 2	SHEET 49 OF 67

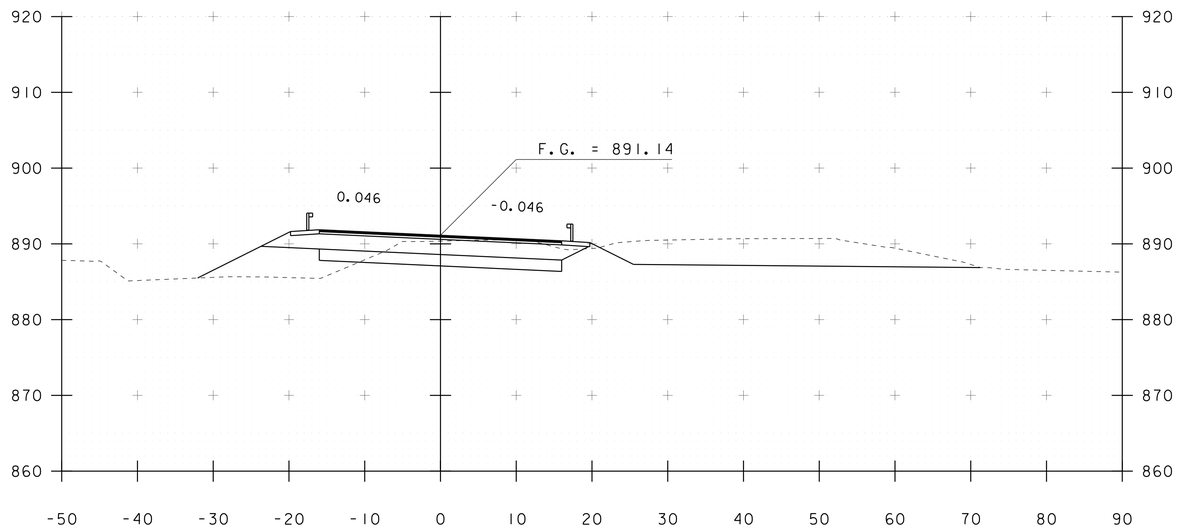

131+00

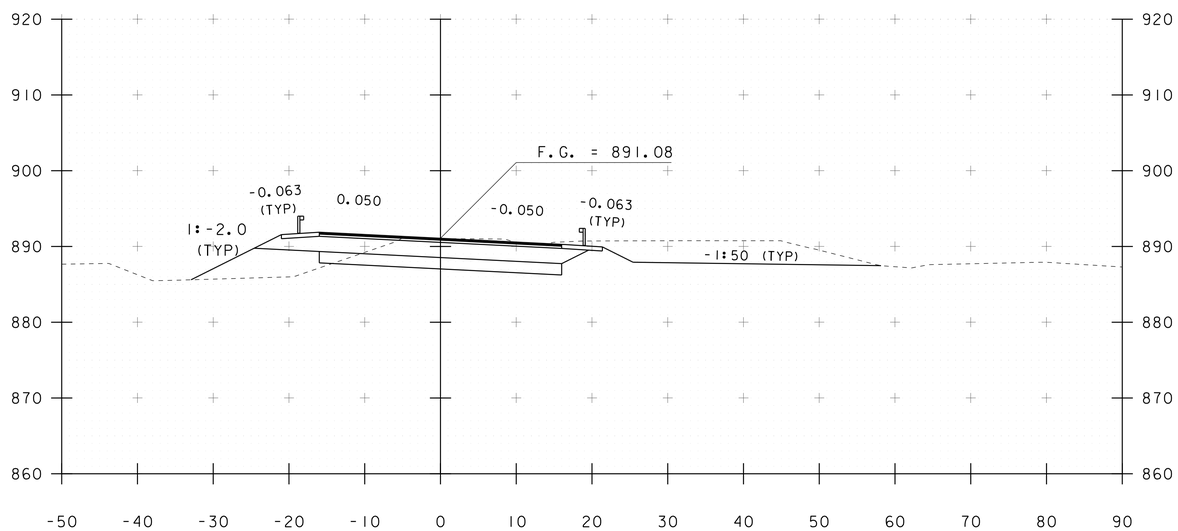

130+75

STA. 130+75 TO STA. 131+00

PROJECT NAME: PITTSFIELD	
PROJECT NUMBER: ER BRF 022-1(23)	
FILE NAME: s86e060xs.dgn	PLOT DATE: 18-SEP-2013
PROJECT LEADER: K. HIGGINS	DRAWN BY: J. GRIGAS
DESIGNED BY: J. GRIGAS	CHECKED BY: J. SALVATORI
MAINLINE SECTIONS 3	SHEET 50 OF 67

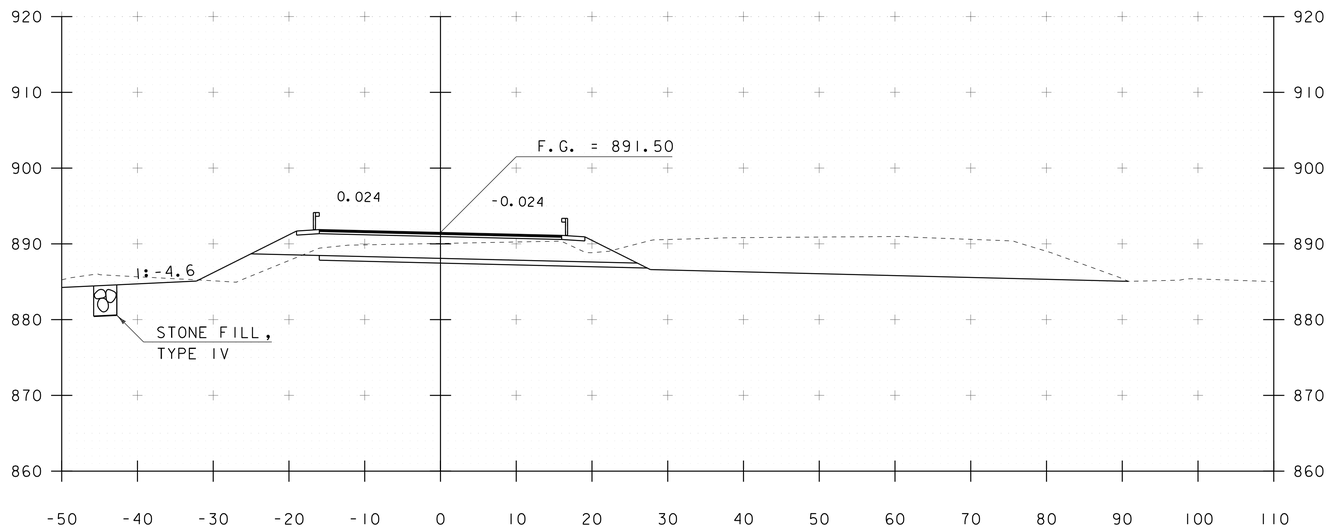

131+50

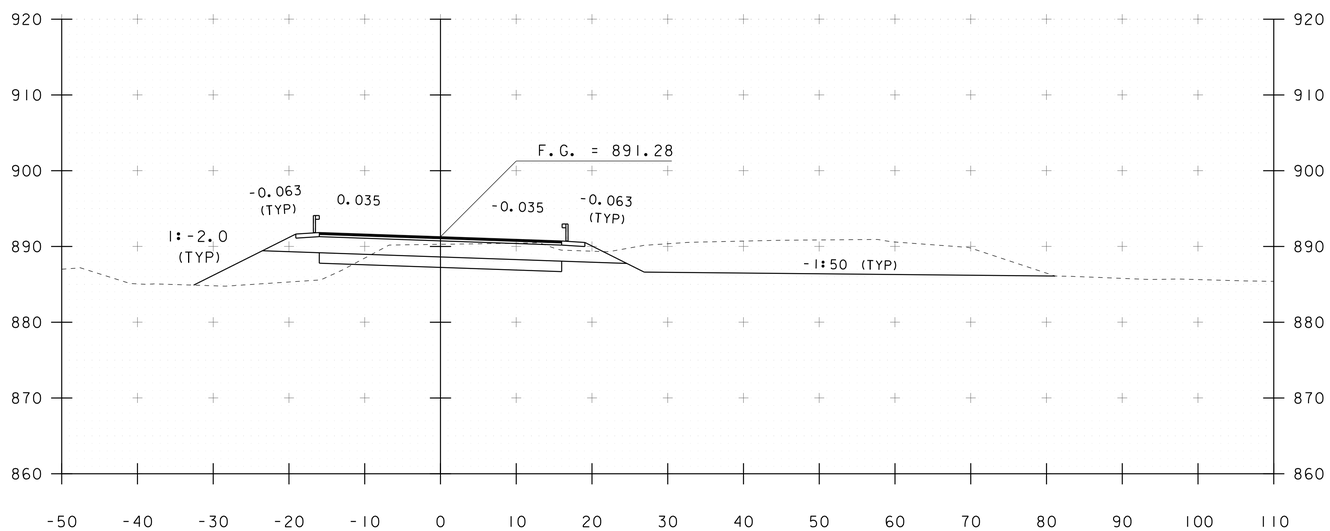

131+25

STA. 131+25 TO STA. 131+50

PROJECT NAME: PITTSFIELD	
PROJECT NUMBER: ER BRF 022-1(23)	
FILE NAME: s86e060xs.dgn	PLOT DATE: 18-SEP-2013
PROJECT LEADER: K. HIGGINS	DRAWN BY: J. GRIGAS
DESIGNED BY: J. GRIGAS	CHECKED BY: J. SALVATORI
MAINLINE SECTIONS 4	SHEET 51 OF 67

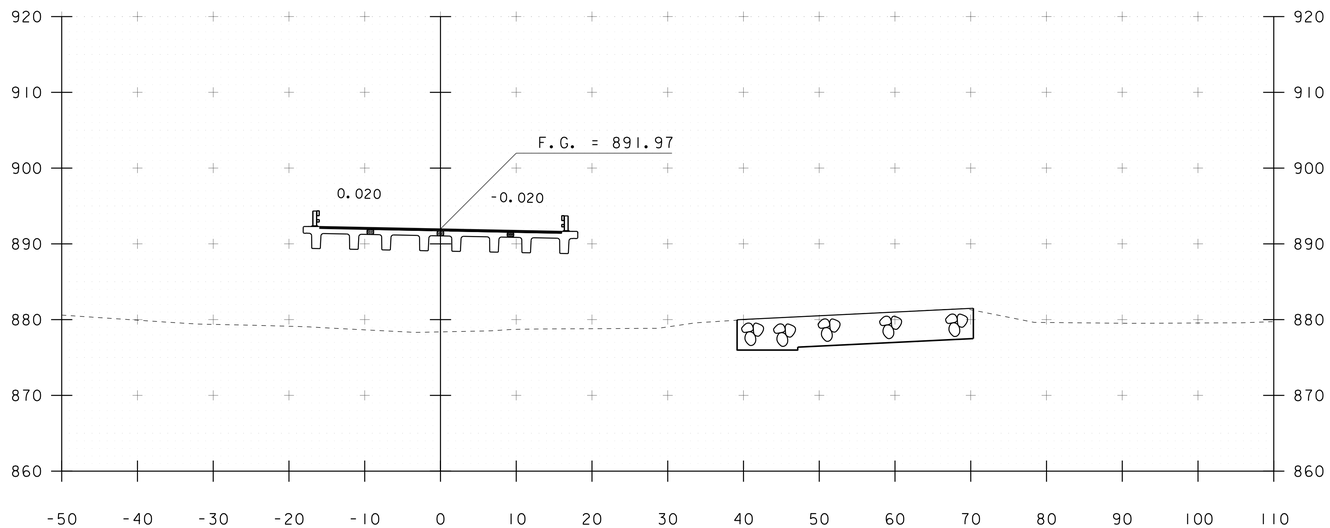

132+00

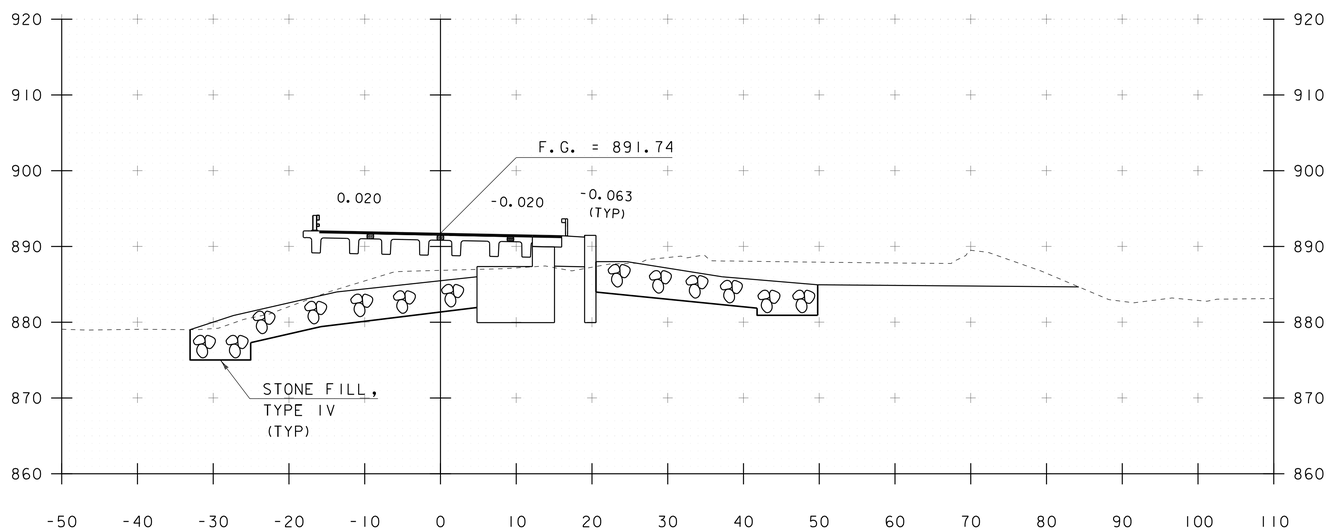

131+75

BEGIN BRIDGE 131+70.58

STA. 131+75 TO STA. 132+00

PROJECT NAME: PITTSFIELD	
PROJECT NUMBER: ER BRF 022-1(23)	
FILE NAME: s86e060xs.dgn	PLOT DATE: 18-SEP-2013
PROJECT LEADER: K. HIGGINS	DRAWN BY: J. GRIGAS
DESIGNED BY: J. GRIGAS	CHECKED BY: J. SALVATORI
MAINLINE SECTIONS 5	SHEET 52 OF 67

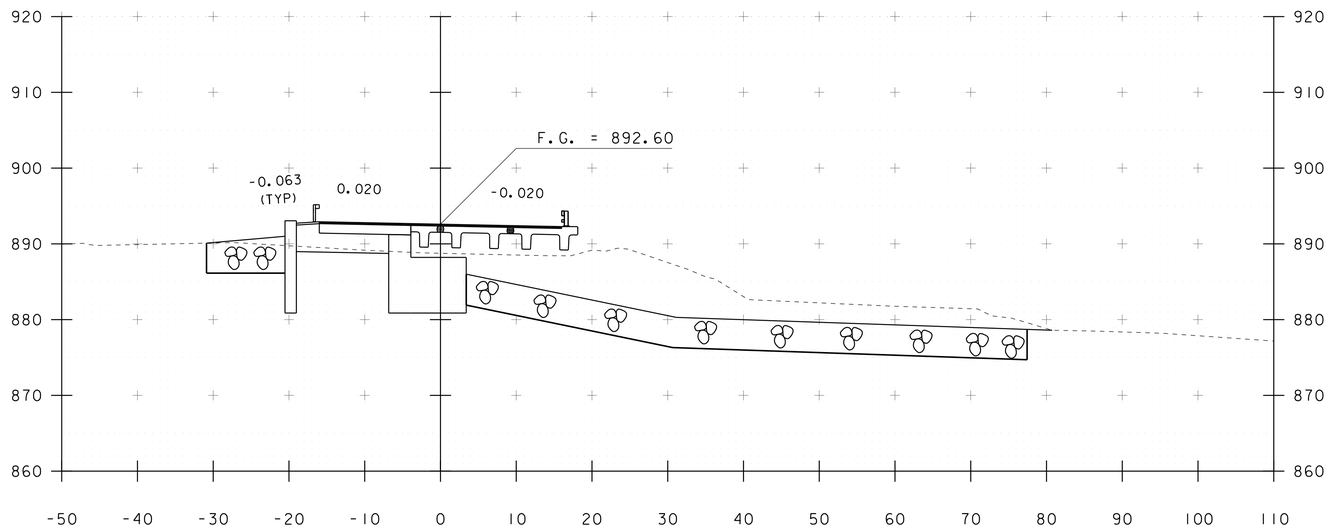

132+50

END BRIDGE 132+51.42

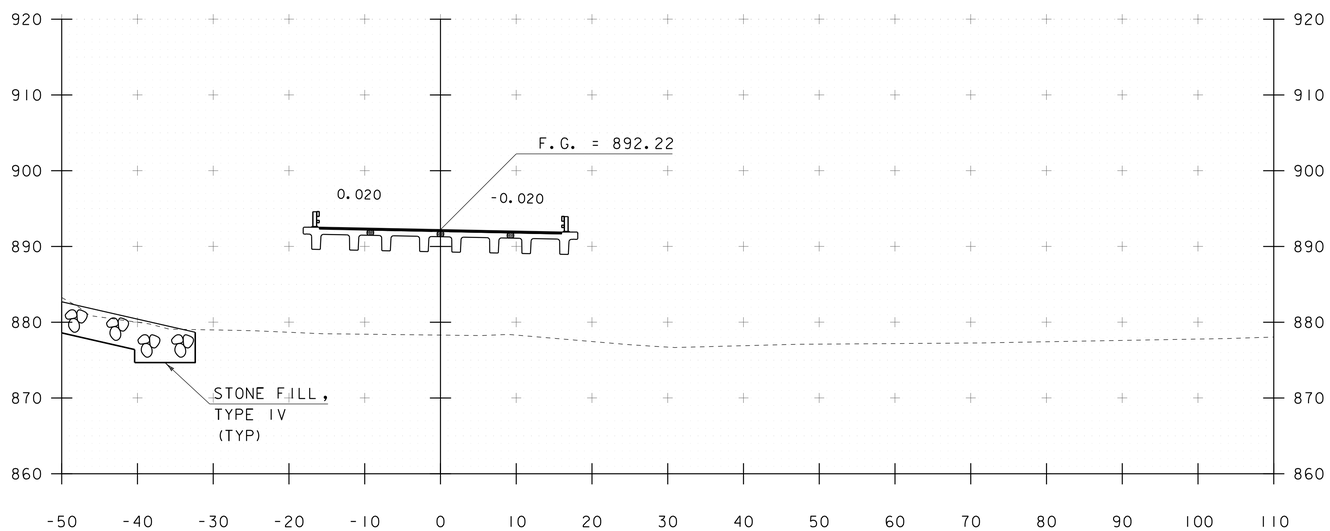

132+25

STA. 132+25 TO STA. 132+50

PROJECT NAME: PITTSFIELD	
PROJECT NUMBER: ER BRF 022-1(23)	
FILE NAME: s86e060xs.dgn	PLOT DATE: 18-SEP-2013
PROJECT LEADER: K. HIGGINS	DRAWN BY: J. GRIGAS
DESIGNED BY: J. GRIGAS	CHECKED BY: J. SALVATORI
MAINLINE SECTIONS 6	SHEET 53 OF 67

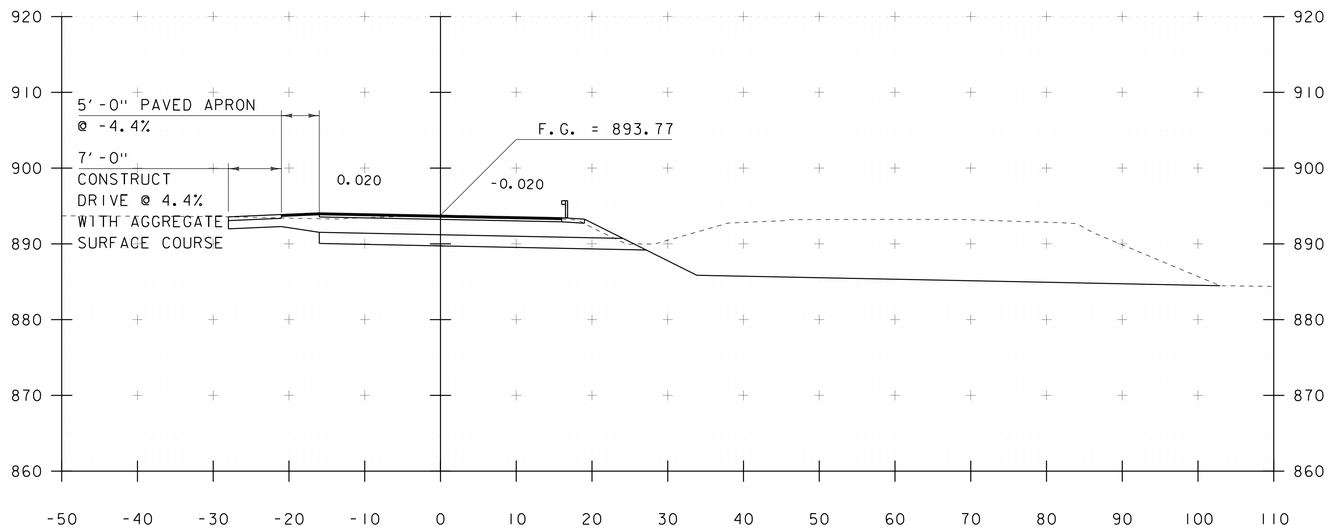

133+00

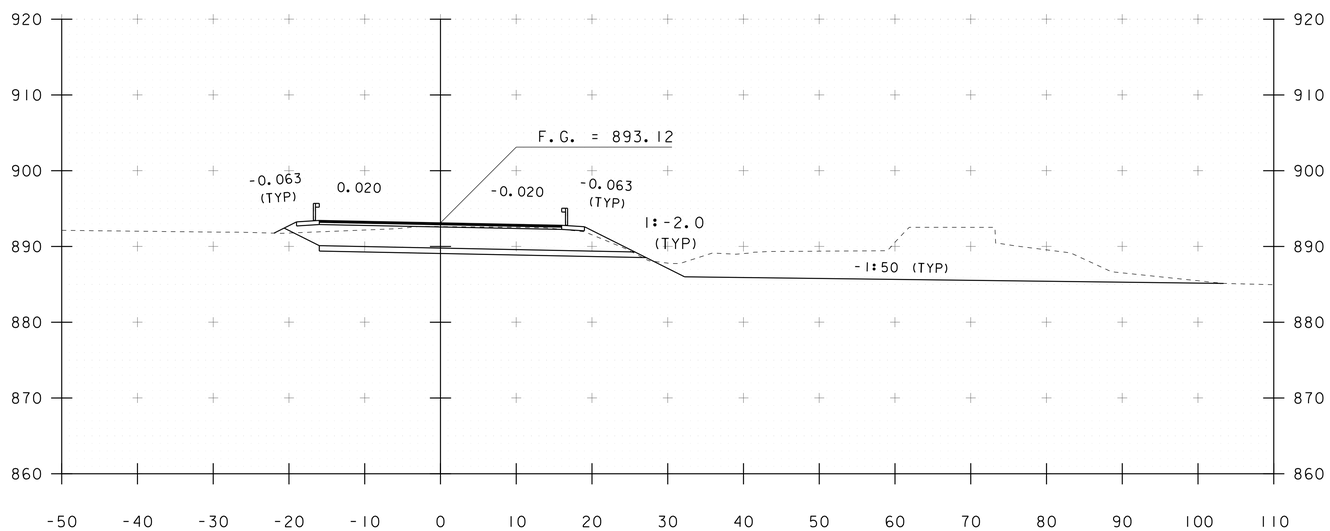

132+75

STA. 132+75 TO STA. 133+00

PROJECT NAME: PITTSFIELD	
PROJECT NUMBER: ER BRF 022-1(23)	
FILE NAME: s86e060xs.dgn	PLOT DATE: 18-SEP-2013
PROJECT LEADER: K. HIGGINS	DRAWN BY: J. GRIGAS
DESIGNED BY: J. GRIGAS	CHECKED BY: J. SALVATORI
MAINLINE SECTIONS 7	SHEET 54 OF 67

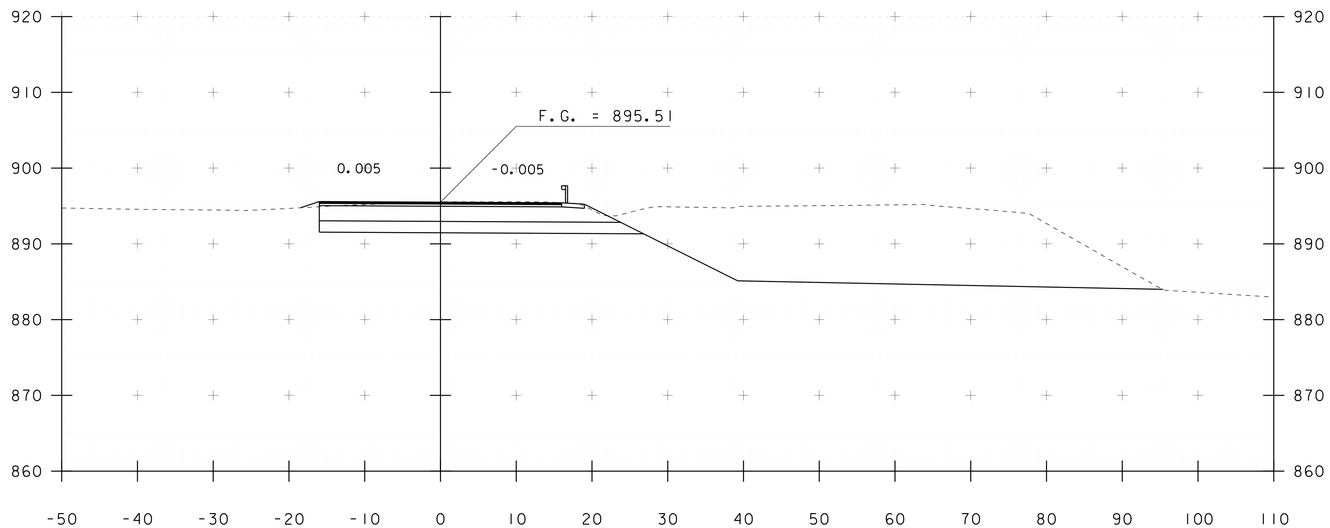

133+50

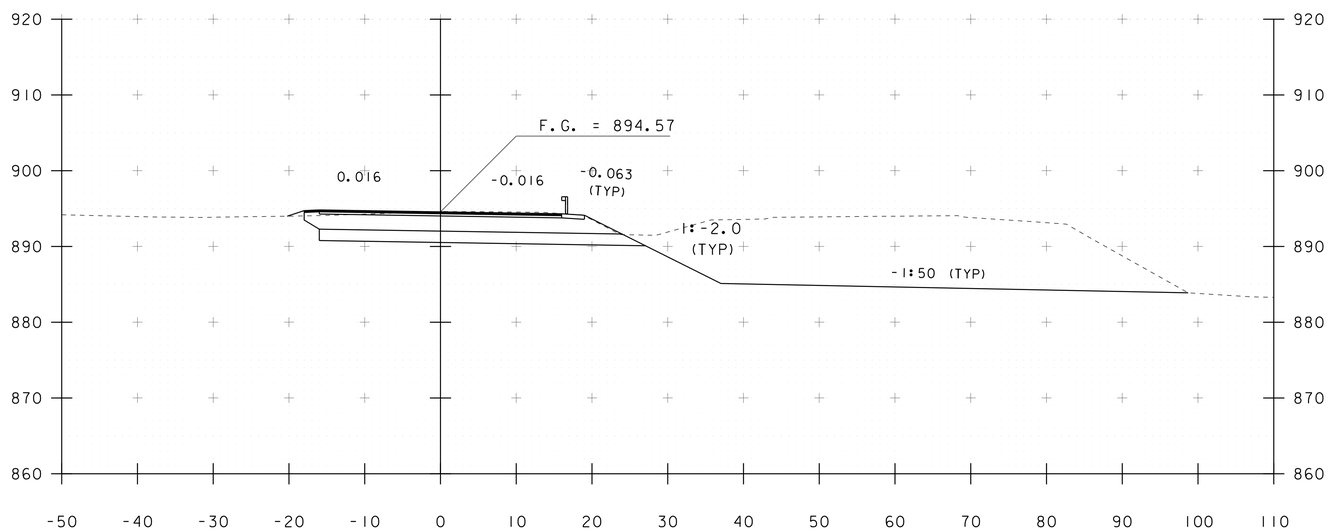

133+25

STA. 133+25 TO STA. 133+50

PROJECT NAME: PITTSFIELD	
PROJECT NUMBER: ER BRF 022-1(23)	
FILE NAME: s86e060xs.dgn	PLOT DATE: 18-SEP-2013
PROJECT LEADER: K. HIGGINS	DRAWN BY: J. GRIGAS
DESIGNED BY: J. GRIGAS	CHECKED BY: J. SALVATORI
MAINLINE SECTIONS 8	SHEET 55 OF 67

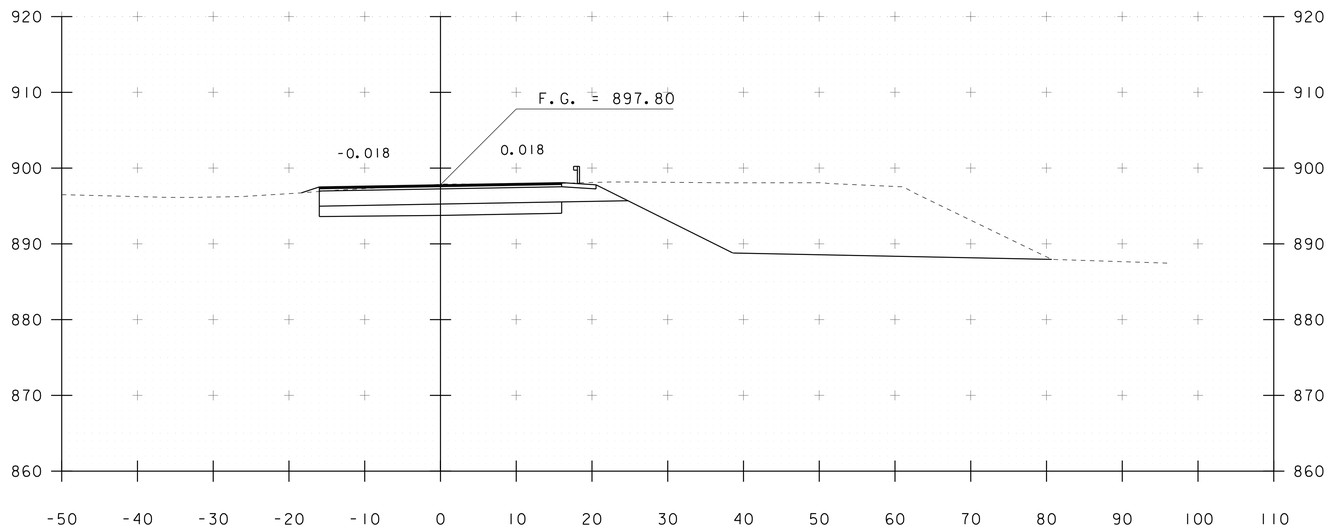

134+00
END PROJECT

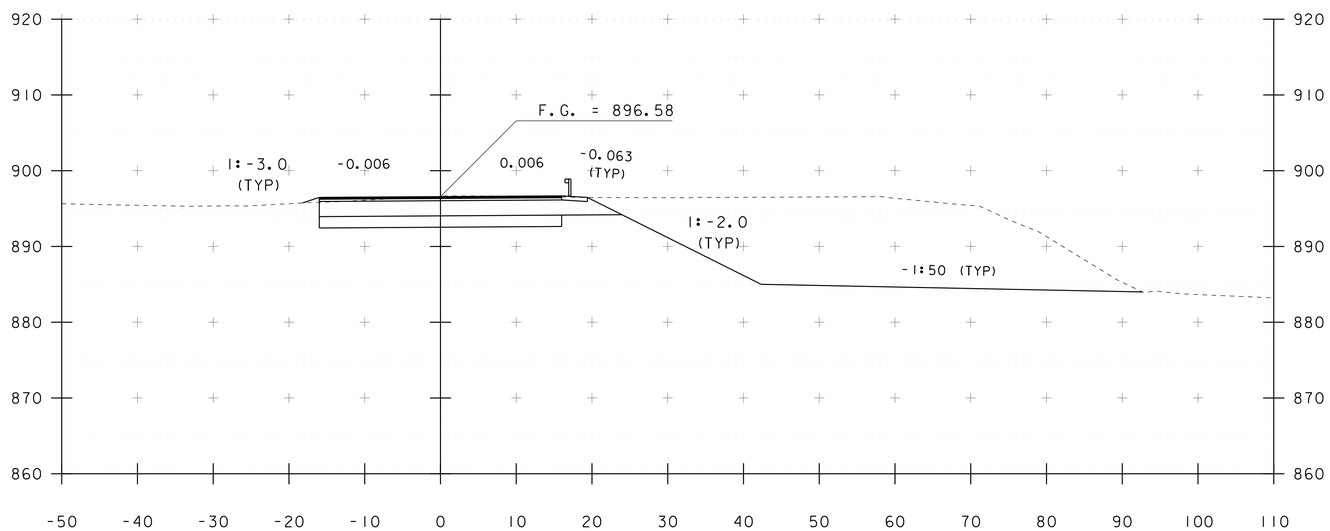

133+75

STA. 133+75 TO STA. 134+00

PROJECT NAME: PITTSFIELD	
PROJECT NUMBER: ER BRF 022-1(23)	
FILE NAME: s86e060xs.dgn	PLOT DATE: 18-SEP-2013
PROJECT LEADER: K. HIGGINS	DRAWN BY: J. GRIGAS
DESIGNED BY: J. GRIGAS	CHECKED BY: J. SALVATORI
MAINLINE SECTIONS 9	SHEET 56 OF 67

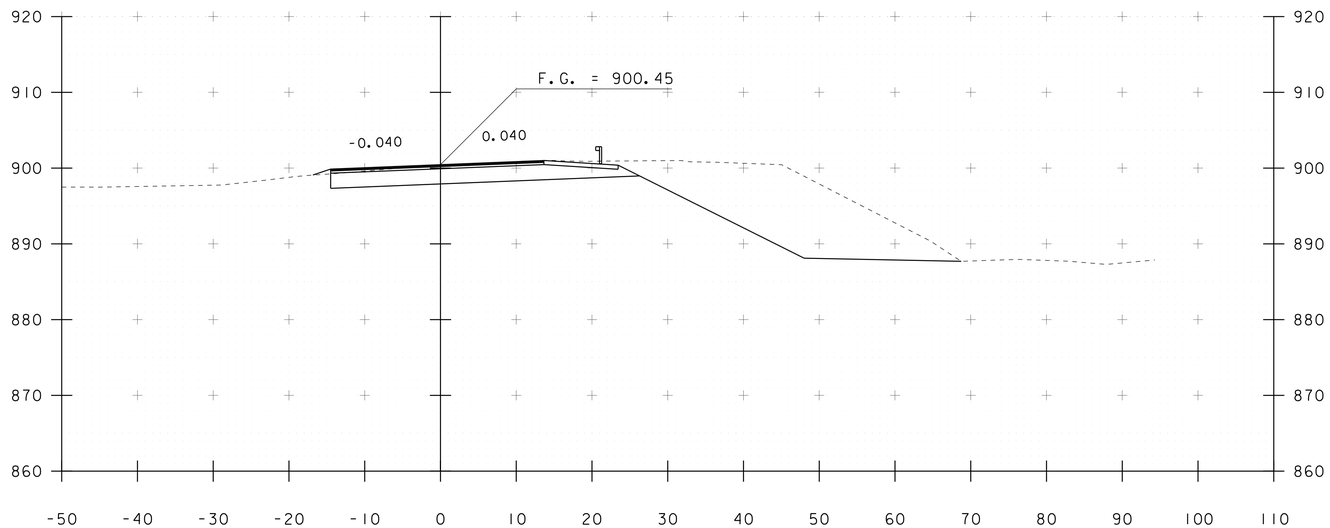

134+50

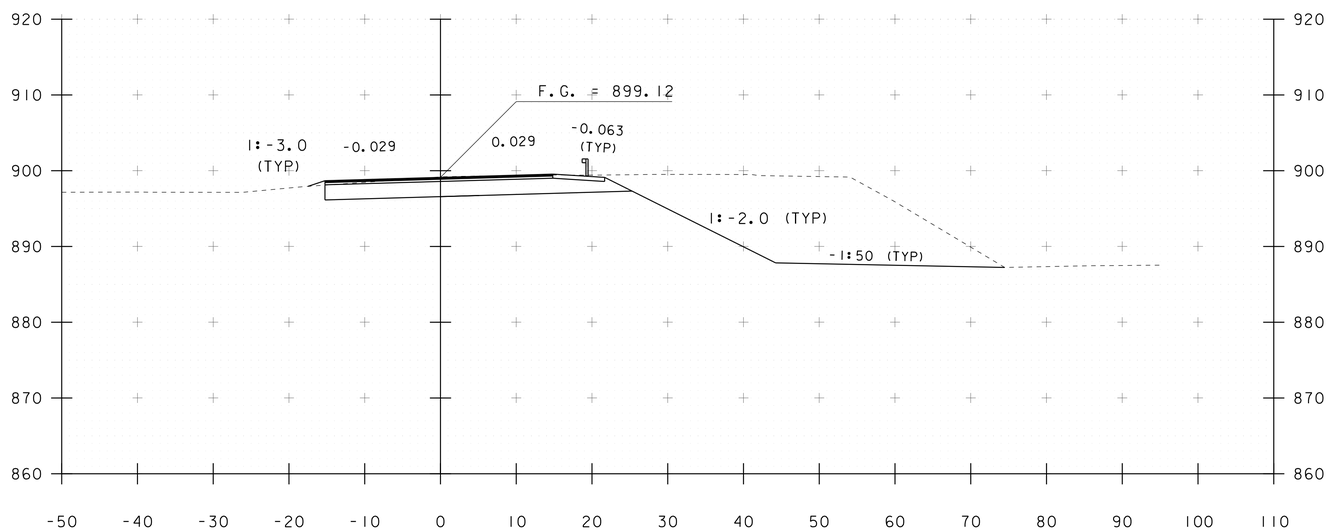

134+25

STA. 134+25 TO STA. 134+50

PROJECT NAME: PITTSFIELD	
PROJECT NUMBER: ER BRF 022-1(23)	
FILE NAME: s86e060xs.dgn	PLOT DATE: 18-SEP-2013
PROJECT LEADER: K. HIGGINS	DRAWN BY: J. GRIGAS
DESIGNED BY: J. GRIGAS	CHECKED BY: J. SALVATORI
MAINLINE SECTIONS 10	SHEET 57 OF 67

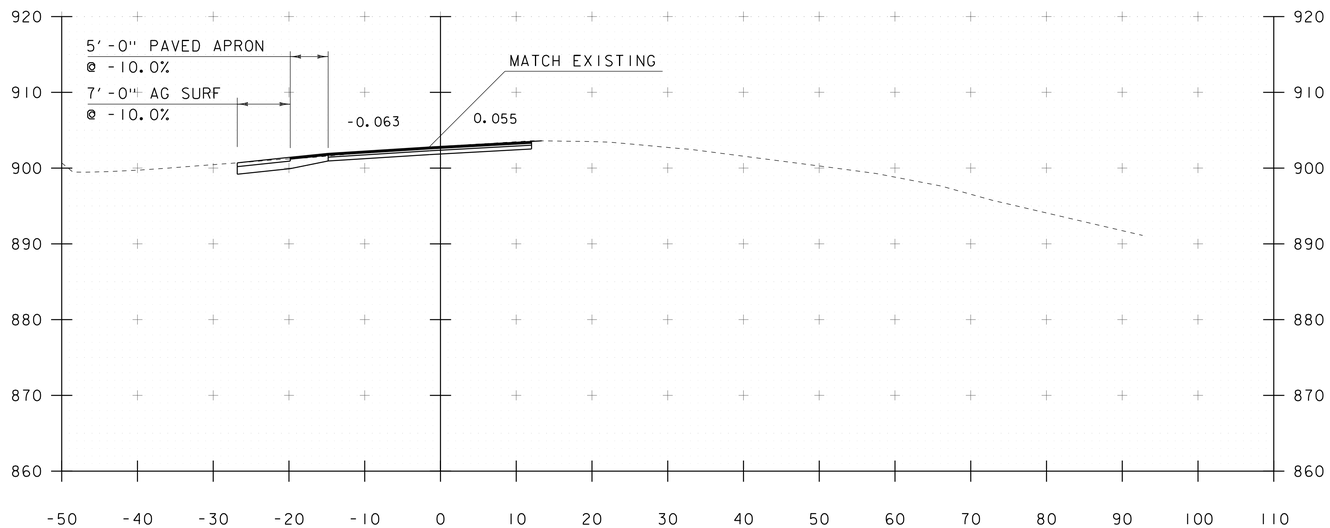

135+00

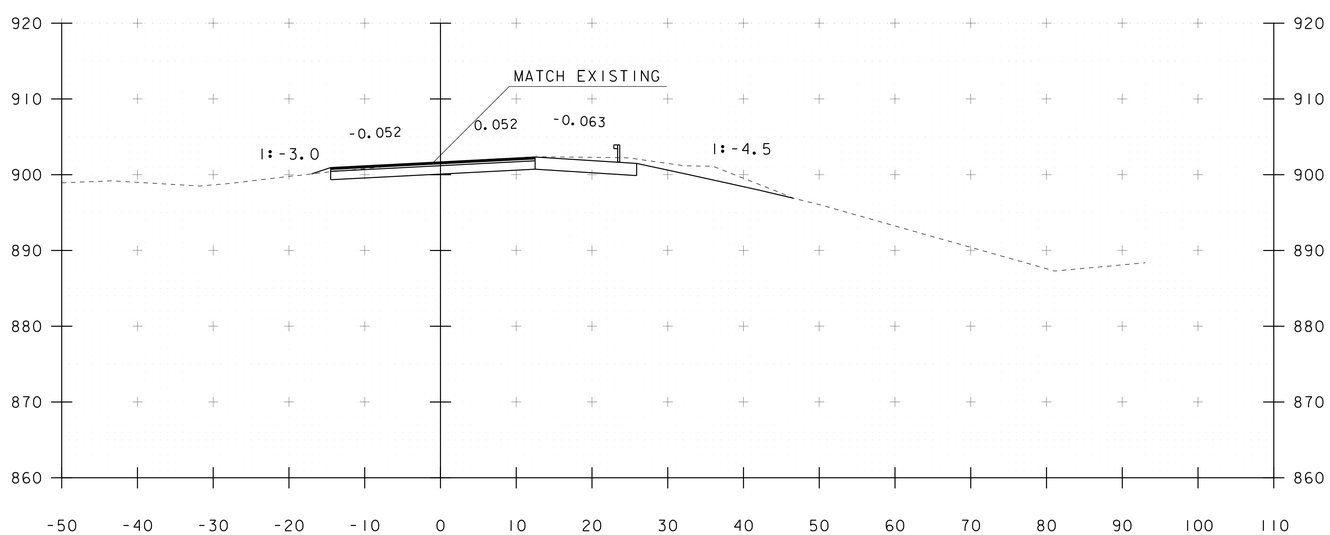

134+75

STA. 134+75 TO STA. 135+00

PROJECT NAME: PITTSFIELD	
PROJECT NUMBER: ER BRF 022-1(23)	
FILE NAME: s86e060xs.dgn	PLOT DATE: 18-SEP-2013
PROJECT LEADER: K. HIGGINS	DRAWN BY: J. GRIGAS
DESIGNED BY: J. GRIGAS	CHECKED BY: J. SALVATORI
MAINLINE SECTIONS II	SHEET 58 OF 67

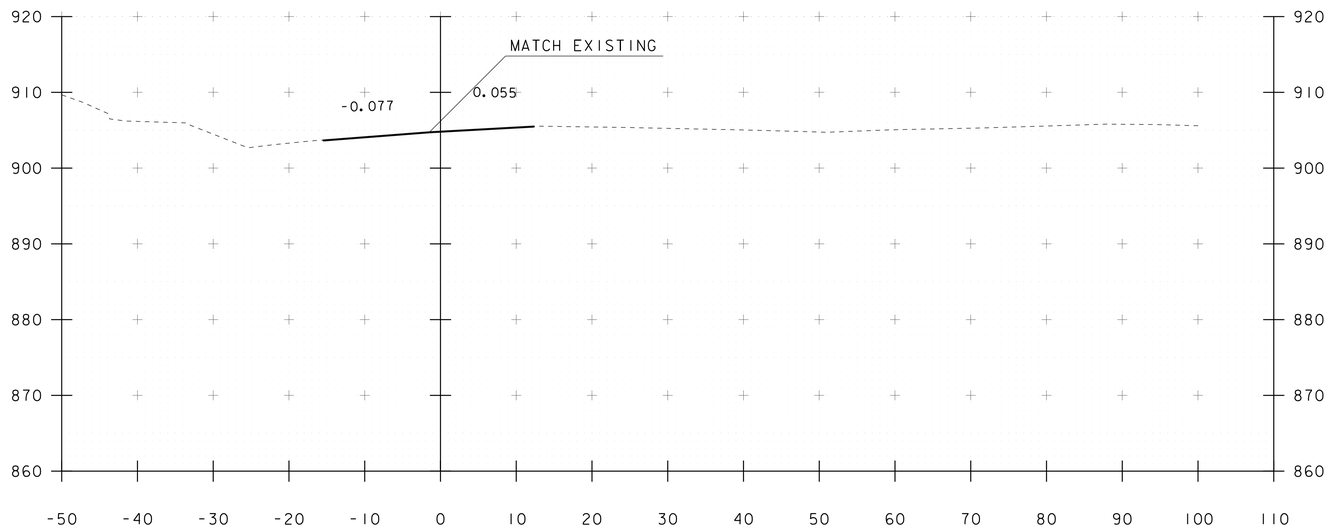

END APPROACH
135+55

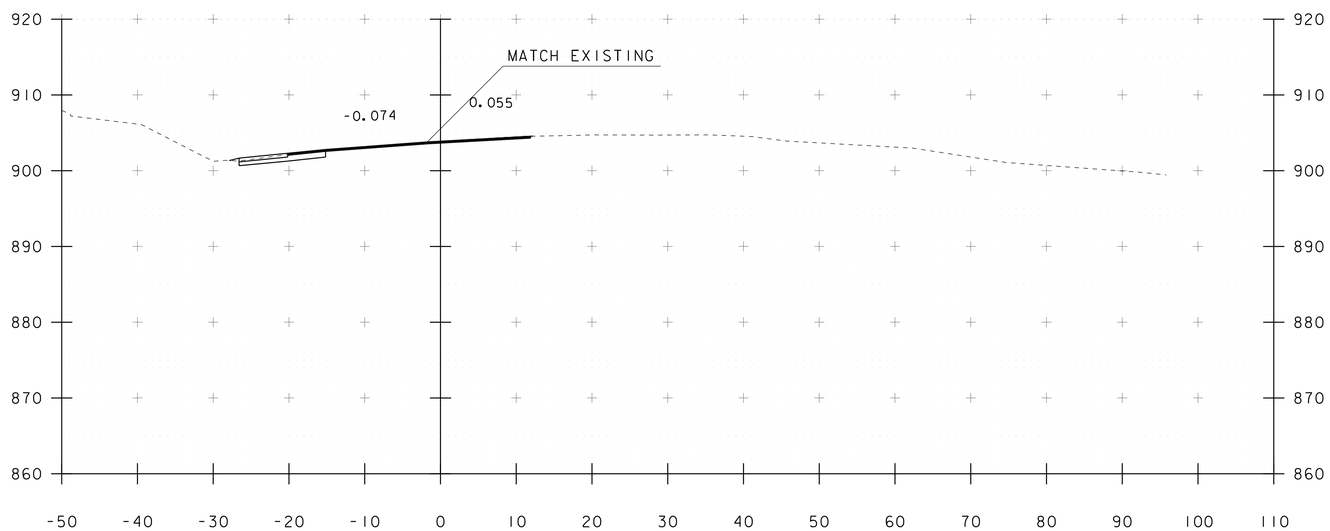

135+25

STA. 135+25 TO STA. 135+50

PROJECT NAME: PITTSFIELD	
PROJECT NUMBER: ER BRF 022-1(23)	
FILE NAME: s86e060xs.dgn	PLOT DATE: 18-SEP-2013
PROJECT LEADER: K. HIGGINS	DRAWN BY: J. GRIGAS
DESIGNED BY: J. GRIGAS	CHECKED BY: J. SALVATORI
MAINLINE SECTIONS 12	SHEET 59 OF 67

STA 20+50 LT (AB #1)
BEGIN UNCLASSIFIED CHANNEL EXCAVATION
BEGIN GEOTEXTILE UNDER STONE FILL
BEGIN STONEFILL, TYPE IV
BEGIN GRUBBING MATERIAL

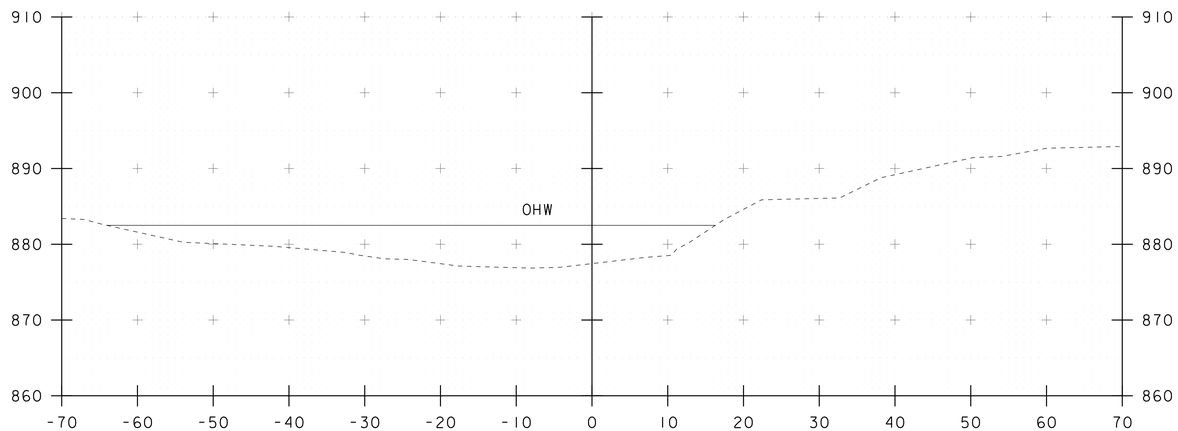

20+00

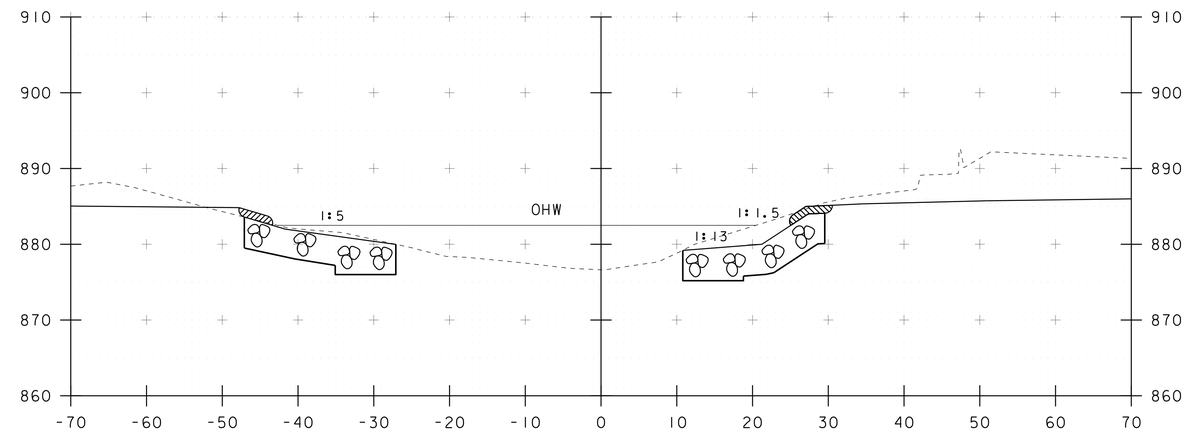

20+50

STA 20+25 RT (AB #2)
BEGIN UNCLASSIFIED CHANNEL EXCAVATION
BEGIN GEOTEXTILE UNDER STONE FILL
BEGIN STONEFILL, TYPE IV
BEGIN GRUBBING MATERIAL

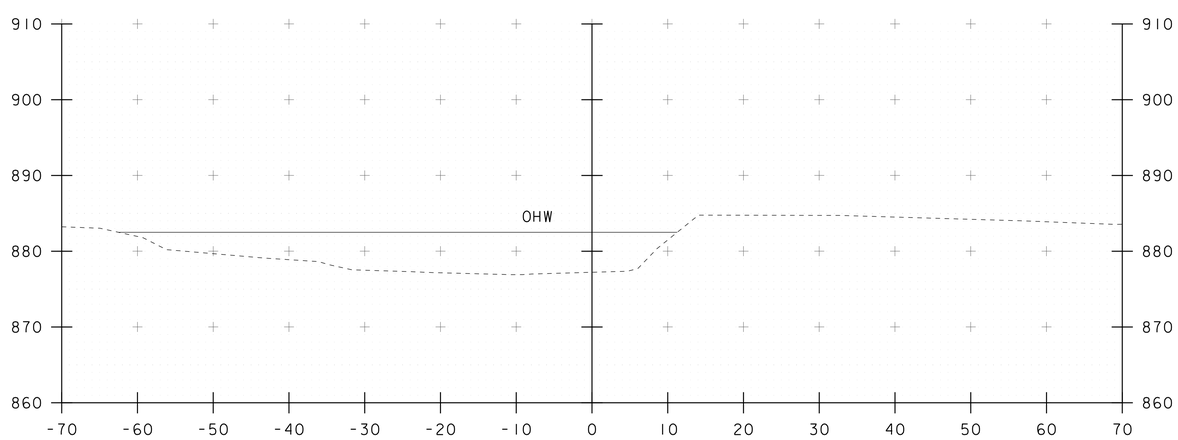

19+75

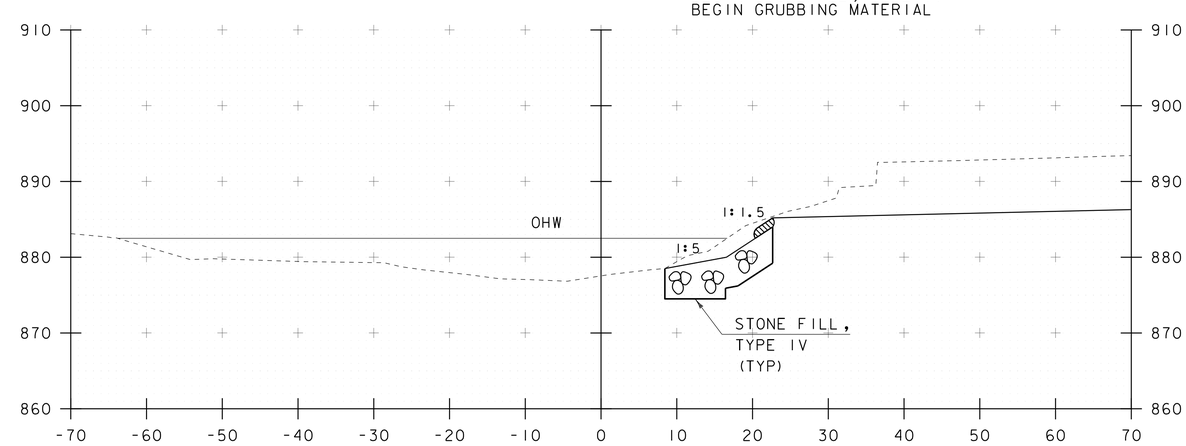

20+25

STA. 19+75 TO STA. 20+50

PROJECT NAME: PITTSFIELD	
PROJECT NUMBER: ER BRF 022-1(23)	
FILE NAME: s86e060xs.dgn	PLOT DATE: 18-SEP-2013
PROJECT LEADER: K. HIGGINS	DRAWN BY: J. GRIGAS
DESIGNED BY: J. GRIGAS	CHECKED BY: J. SALVATORI
CHANNEL SECTIONS 1	SHEET 60 OF 67

STA 20+90 RT (AB #2)
END GRUBBING MATERIAL

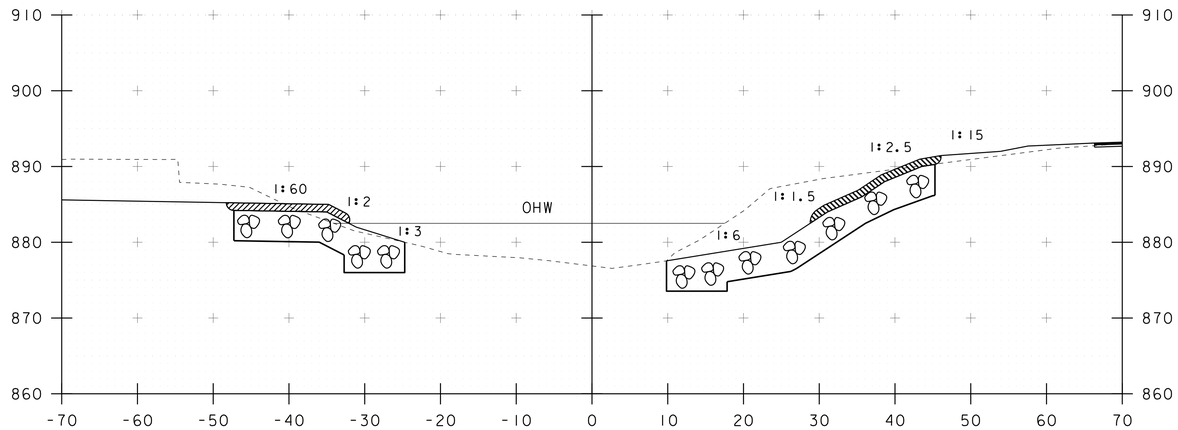

20+70

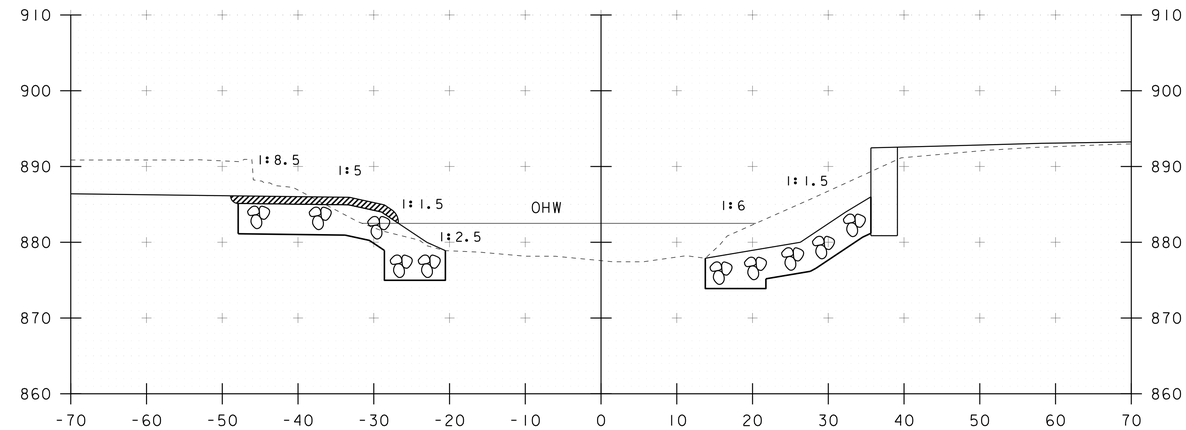

20+90

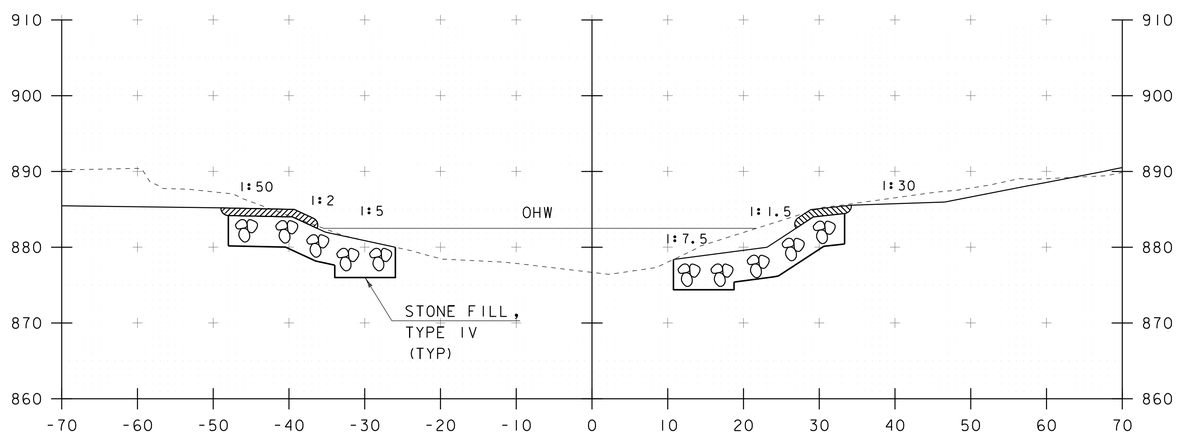

20+60

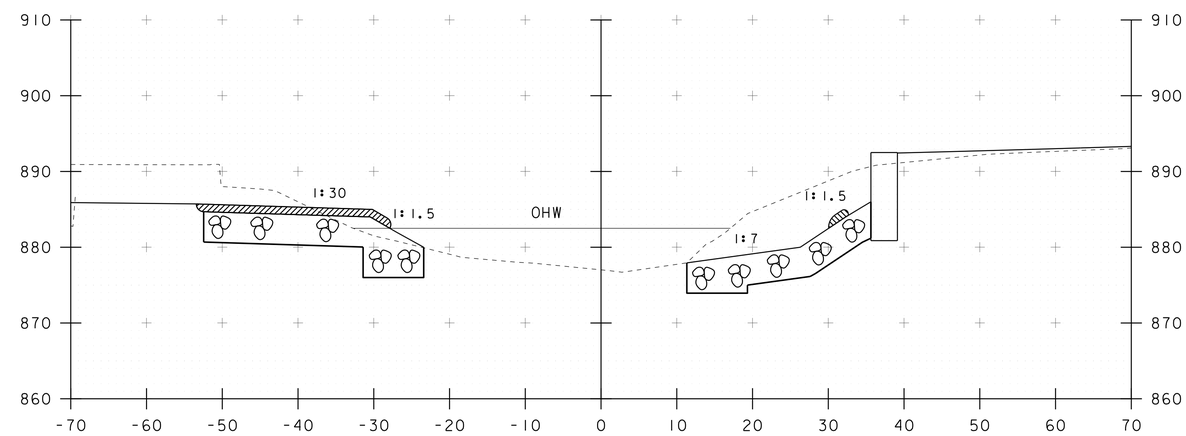

20+80

NOTE:
1. SUPERSTRUCTURE NOT SHOWN FOR CLARITY

STA. 20+60 TO STA. 20+90

PROJECT NAME: PITTSFIELD	
PROJECT NUMBER: ER BRF 022-1(23)	
FILE NAME: s86e060xs.dgn	PLOT DATE: 18-SEP-2013
PROJECT LEADER: K. HIGGINS	DRAWN BY: J. GRIGAS
DESIGNED BY: J. GRIGAS	CHECKED BY: J. SALVATORI
CHANNEL SECTIONS 2	SHEET 61 OF 67

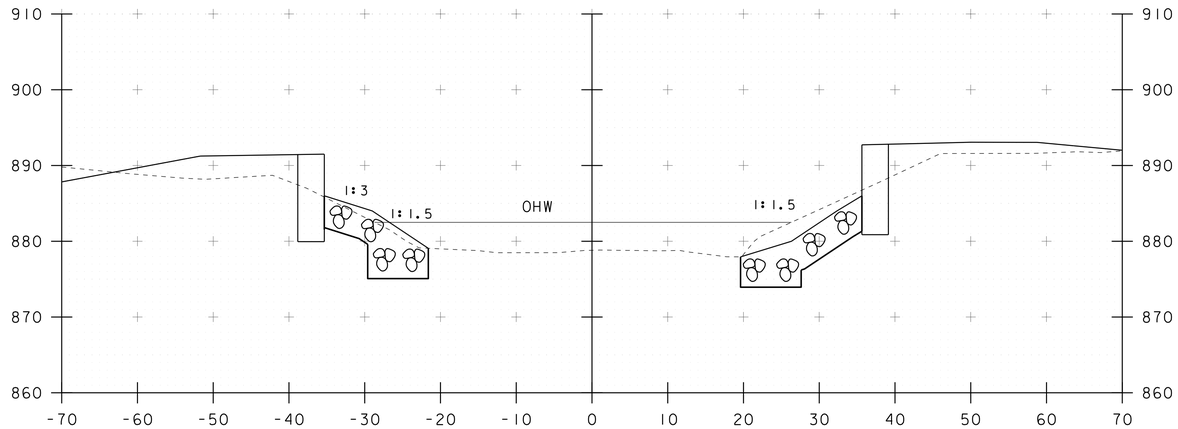

21+10

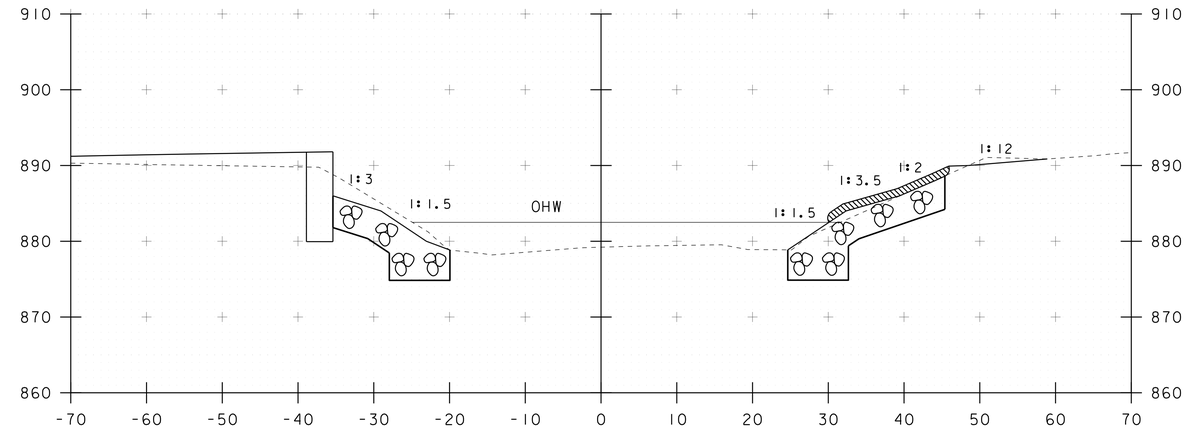

21+30

STA 21+00.00 LT (AB #1)
END GRUBBING MATERIAL

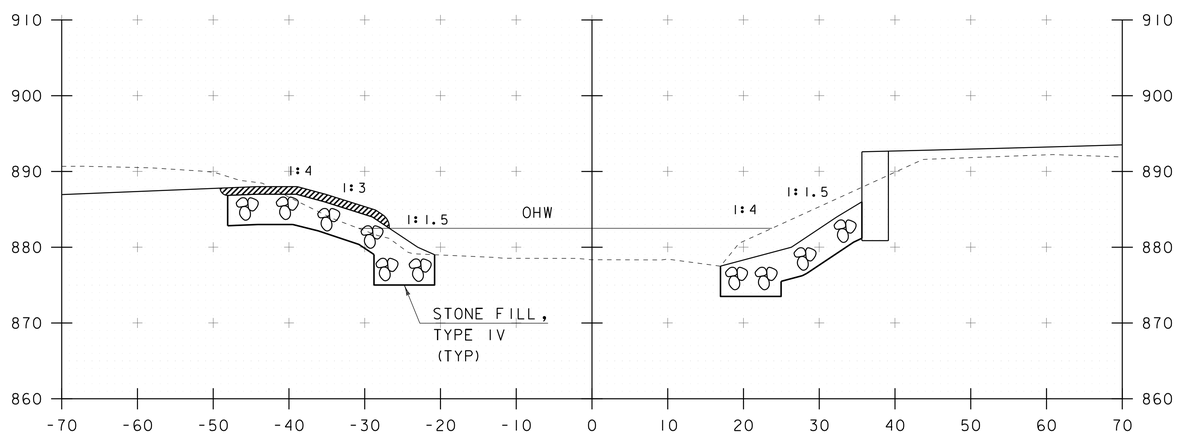

21+00

STA 21+20 RT (AB #2)
BEGIN GRUBBING MATERIAL

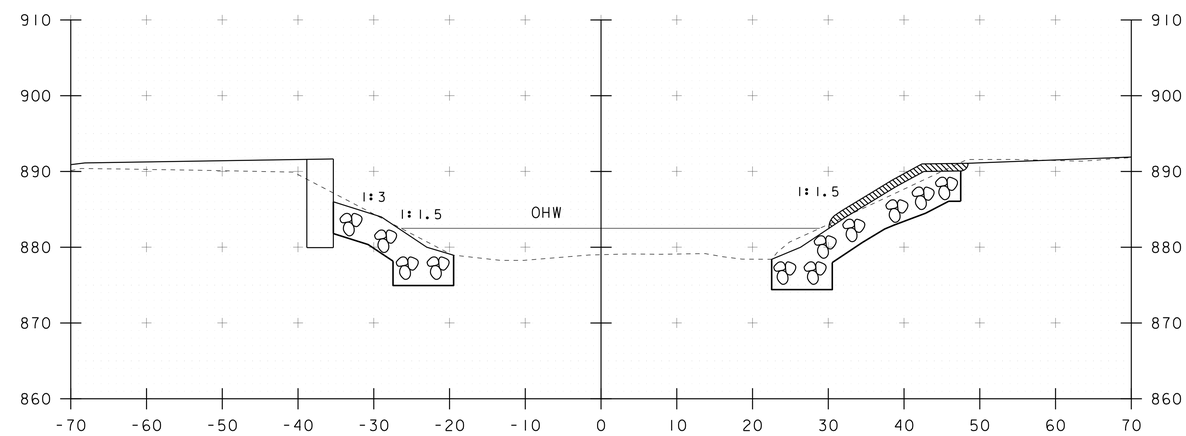

21+20

NOTE:
1. SUPERSTRUCTURE NOT SHOWN FOR CLARITY

STA. 21+00 TO STA. 21+30

PROJECT NAME: PITTSFIELD	
PROJECT NUMBER: ER BRF 022-1(23)	
FILE NAME: s86e060xs.dgn	PLOT DATE: 18-SEP-2013
PROJECT LEADER: K. HIGGINS	DRAWN BY: J. GRIGAS
DESIGNED BY: J. GRIGAS	CHECKED BY: J. SALVATORI
CHANNEL SECTIONS 3	SHEET 62 OF 67

STA 21+50 RT(AB #2)
END UNCLASSIFIED CHANNEL EXCAVATION
END GEOTEXTILE UNDER STONE FILL
END STONEFILL, TYPE IV
END GRUBBING MATERIAL

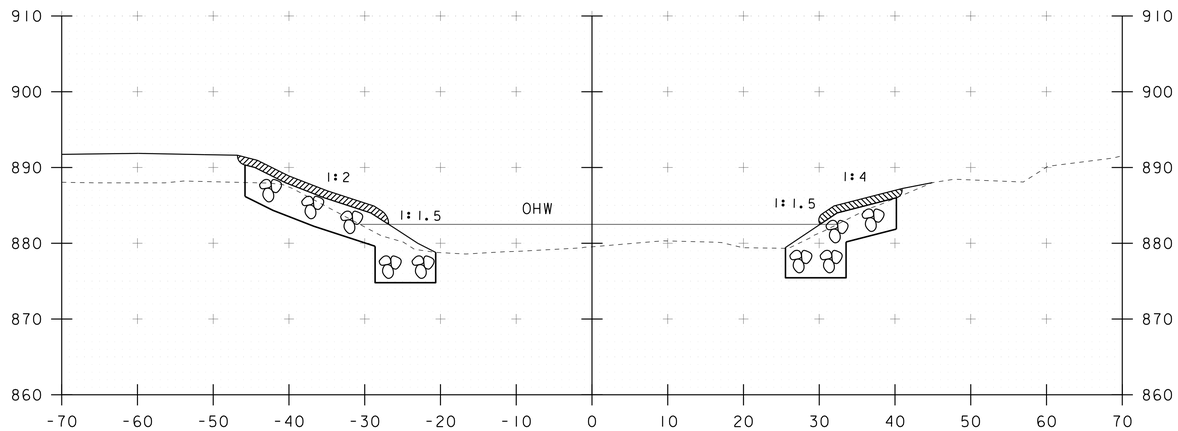

21+50

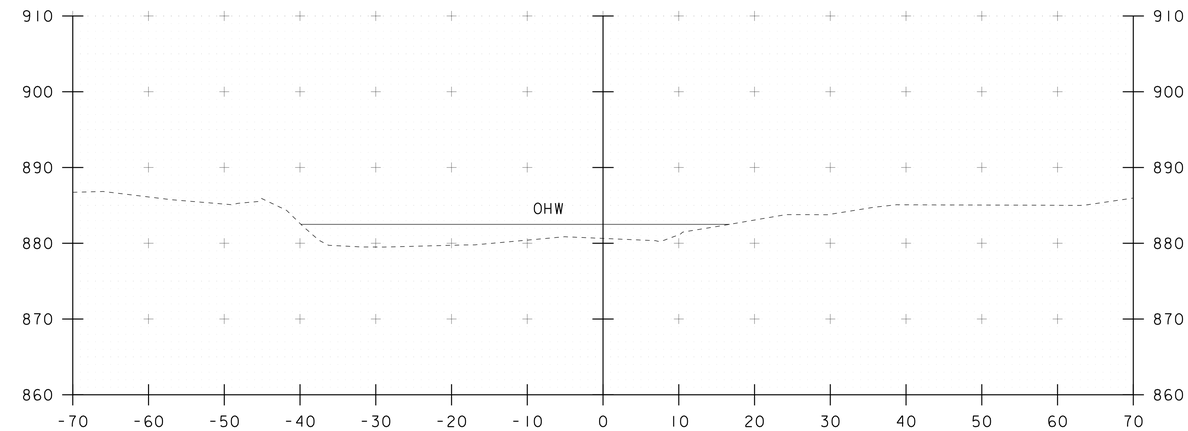

22+00

STA 21+41 LT(AB #1)
BEGIN GRUBBING MATERIAL

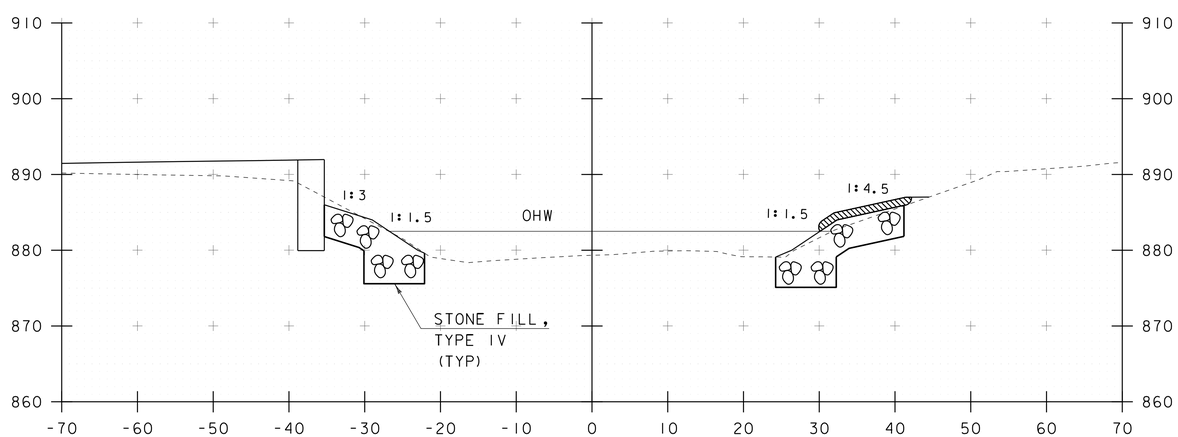

21+40

STA 21+75 LT(AB #1)
END UNCLASSIFIED CHANNEL EXCAVATION
END GEOTEXTILE UNDER STONE FILL
END STONEFILL, TYPE IV
END GRUBBING MATERIAL

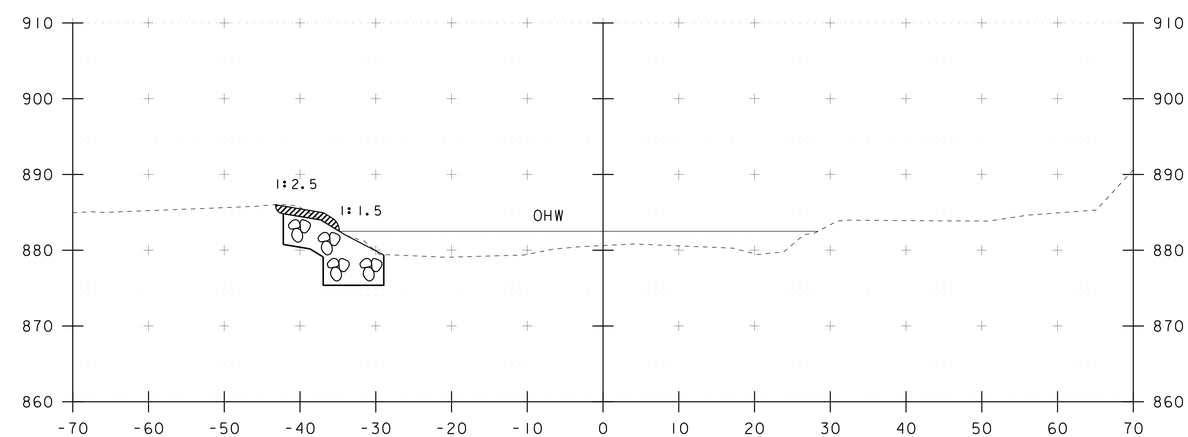

21+75

NOTE:
1. SUPERSTRUCTURE NOT SHOWN FOR CLARITY

STA. 21+40 TO STA. 22+00

PROJECT NAME: PITTSFIELD	
PROJECT NUMBER: ER BRF 022-1(23)	
FILE NAME: s86e060xs.dgn	PLOT DATE: 18-SEP-2013
PROJECT LEADER: K. HIGGINS	DRAWN BY: J. GRIGAS
DESIGNED BY: J. GRIGAS	CHECKED BY: J. SALVATORI
CHANNEL SECTIONS 4	SHEET 63 OF 67

STATE OF VERMONT
AGENCY OF TRANSPORTATION

RIGHT - OF - WAY DETAIL SHEET

TABLE OF PROPERTY ACQUISITION

PARCEL NO.	PROPERTY OWNER	ROW LAYOUT NO.	BEGINNING STATION	ENDING STATION	TAKE AREA±	REMAINDER AREA±	RIGHT TYPE	RIGHT T / P	RIGHT AREA ±	RECORDING DATA TITLE	RECORDING DATA DATE	RECORDING DATA TOWN / CITY	RECORDING DATA BOOK	RECORDING DATA PAGE	REMARKS
1	GRINDEL, PAUL R. & MARLENE L.	1, 2	129+25 LT	131+57 LT			CONST	T	2,024 SF						INCL. PDF, BF & EC
			130+00 LT	131+54 LT			SR	P	1,599 SF						
			130+19 LT	130+71 LT			I & M	P	116 SF						GUARDRAIL
			131+49 LT	131+79 LT			CH	P	493 SF						
2	GALLAGHER, JAMES R. & SARAH C.	2	130+14 RT				DRIVE	T							20' GRAVEL
			130+26 RT	131+61 RT			DETOUR	T	0.14 A						INCL. PDF, BF & EC; 5,971 SF±
			131+22 RT	131+52 RT			SR	P	28 SF						
			131+08 RT	131+63 RT											UTILITY EASE. TO BE ACQUIRED BY G.M.P.; 1,672 SF±
3	TOWN OF PITTSFIELD	2	132+21 LT	132+93 LT			CONST	T	752 SF						INCL. PDF, BF & EC
			132+22 LT	132+52 LT			CH	P	486 SF						
			132+86 LT	132+92 LT			I & M	P	8 SF						GUARDRAIL
			133+06 LT				DRIVE	T							30' GRAVEL
4	BULLOCK, WILLIAM C. JR.;	2, 3	131+52 RT	131+88 RT			SR	P	426 SF						
	PINS, TIMOTHY E.;		131+52 RT	135+03 RT			DETOUR	T	0.51 A						INCL. PDF, BF & EC; 22,137 SF±
	TURNBULL, BRADLEY J.		131+69 RT	132+00 RT			CH	P	415 SF						
			132+32 RT	132+68 RT			CH	P	518 SF						
			132+62 RT	134+91 RT			SR	P	3,555 SF						
5	GREEN MOUNTAIN POWER CORP.		129+25 LT	135+03 RT											UTILITY
6	FAIRPOINT COMMUNICATIONS, INC.		129+25 LT	135+03 RT											UTILITY

TABLE OF REVISIONS

REVISION NO.	ROW SET SHEET #	DESCRIPTION	DATE

APPROVED: HARRY PETROVS DATE: 04-02-13
CHIEF, PLANS & TITLES

PROJECT NAME: **PITTSFIELD**
PROJECT NUMBER: ER BRF 022-1(23)

FILE NAME: **r86e060DetailSheet.xls**
PROJECT LEADER: **K. HIGGINS**
DESIGNED BY: **J. SALVATORI**
R.O.W. DETAIL SHEET #1

PLOT DATE: 18-SEP-2013
DRAWN BY: **M. TROTTIER**
CHECKED BY: **J. BLANCHARD**
SHEET 64 OF 67

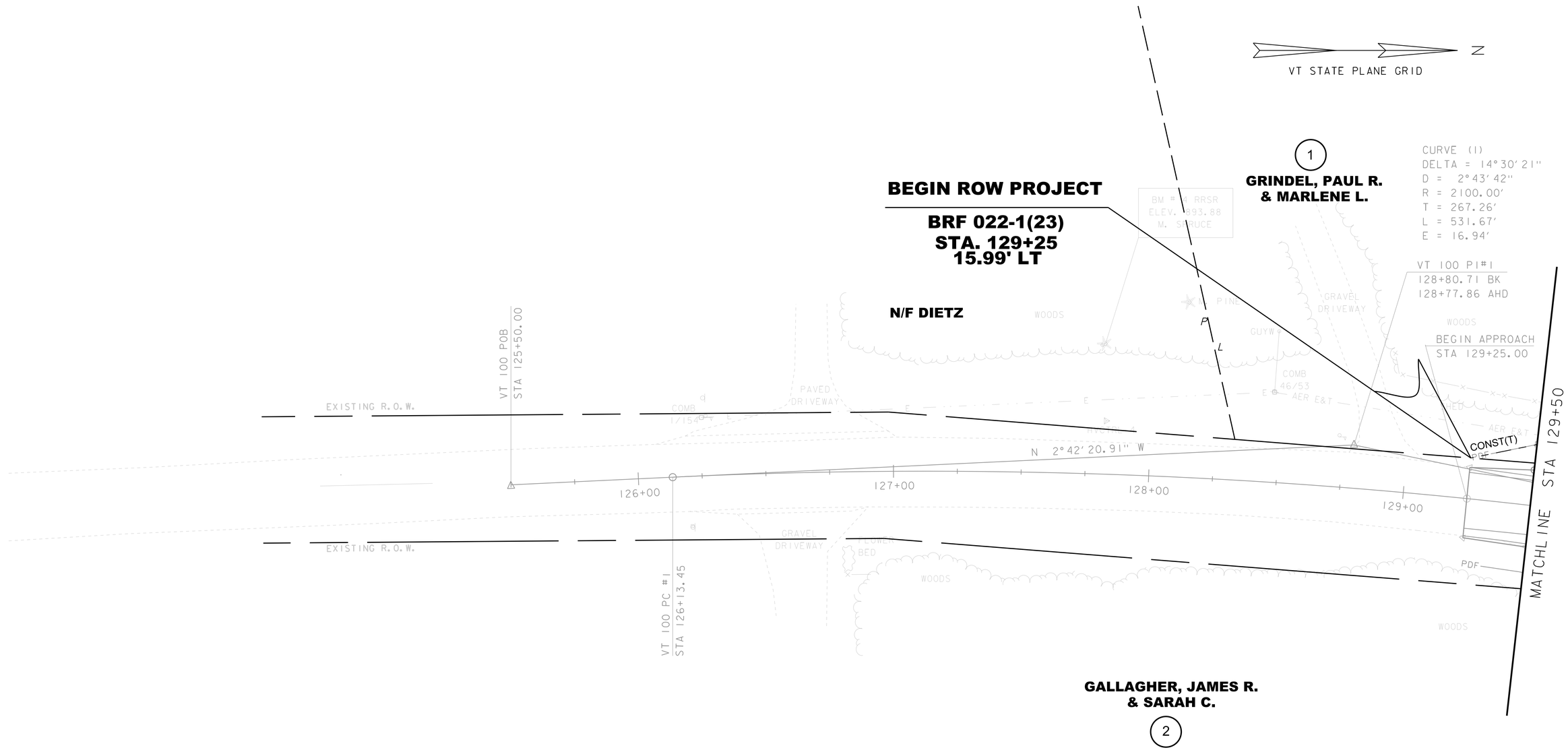

LINES SHOWN ON THIS PLAN AS EXISTING PROPERTY LINES P/L ARE BELIEVED TO BE ACCURATE BUT SHOULD NOT BE RELIED UPON FOR PURPOSES UNRELATED TO THE STATE OF VERMONT'S ACQUISITION OF LAND AND RIGHTS FOR THIS PROJECT.

FOR R.O.W. USE ONLY

LAYOUT SHEET 1

SCALE 1" = 20'-0"

20 0 20

PROJECT NAME: PITTSFIELD	
PROJECT NUMBER: ER BRF 022-1(23)	
FILE NAME: r86e060_lay1.dgn	PLOT DATE: 18-SEP-2013
PROJECT LEADER: K. HIGGINS	DRAWN BY: J. BLANCHARD
DESIGNED BY: J. SALVATORI	CHECKED BY: H. PETROVS
ROW LAYOUT SHEET 1 OF 3	SHEET 65 OF 67

SPECIAL PROVISION
(REMOVAL OF TEMPORARY BRIDGE AND APPROACHES)
STA 129+00.00 - 135+50.00

CONSTRUCT GRAVEL DRIVE
W/ 5'-0" PAVED APRON
STA 129+81.00 - 130+46.00 RT
STA 132+77.00 - 133+30.00 LT
STA 134+89.00 - 135+50.00 LT

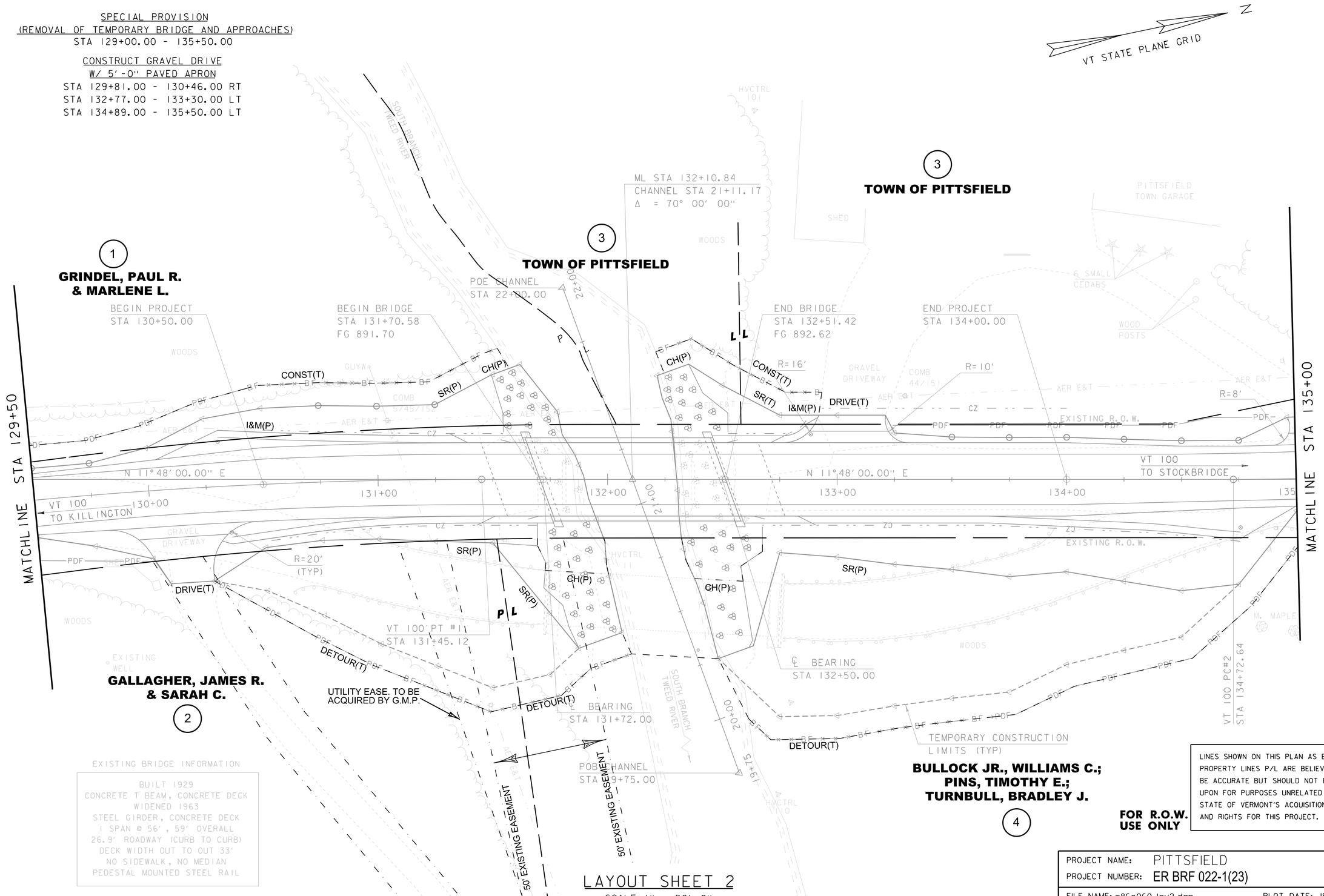

LINES SHOWN ON THIS PLAN AS EXISTING PROPERTY LINES P/L ARE BELIEVED TO BE ACCURATE BUT SHOULD NOT BE RELIED UPON FOR PURPOSES UNRELATED TO THE STATE OF VERMONT'S ACQUISITION OF LAND AND RIGHTS FOR THIS PROJECT.

FOR R.O.W. USE ONLY

LAYOUT SHEET 2

SCALE 1" = 20'-0"
20 0 20

PROJECT NAME: PITTSFIELD	
PROJECT NUMBER: ER BRF 022-1(23)	
FILE NAME: r86e060_lay2.dgn	PLOT DATE: 18-SEP-2013
PROJECT LEADER: K. HIGGINS	DRAWN BY: K. FRIEDLAND
DESIGNED BY: J. SALVATORI	CHECKED BY: J. SALVATORI
ROW LAYOUT SHEET 2 OF 3	SHEET 66 OF 67

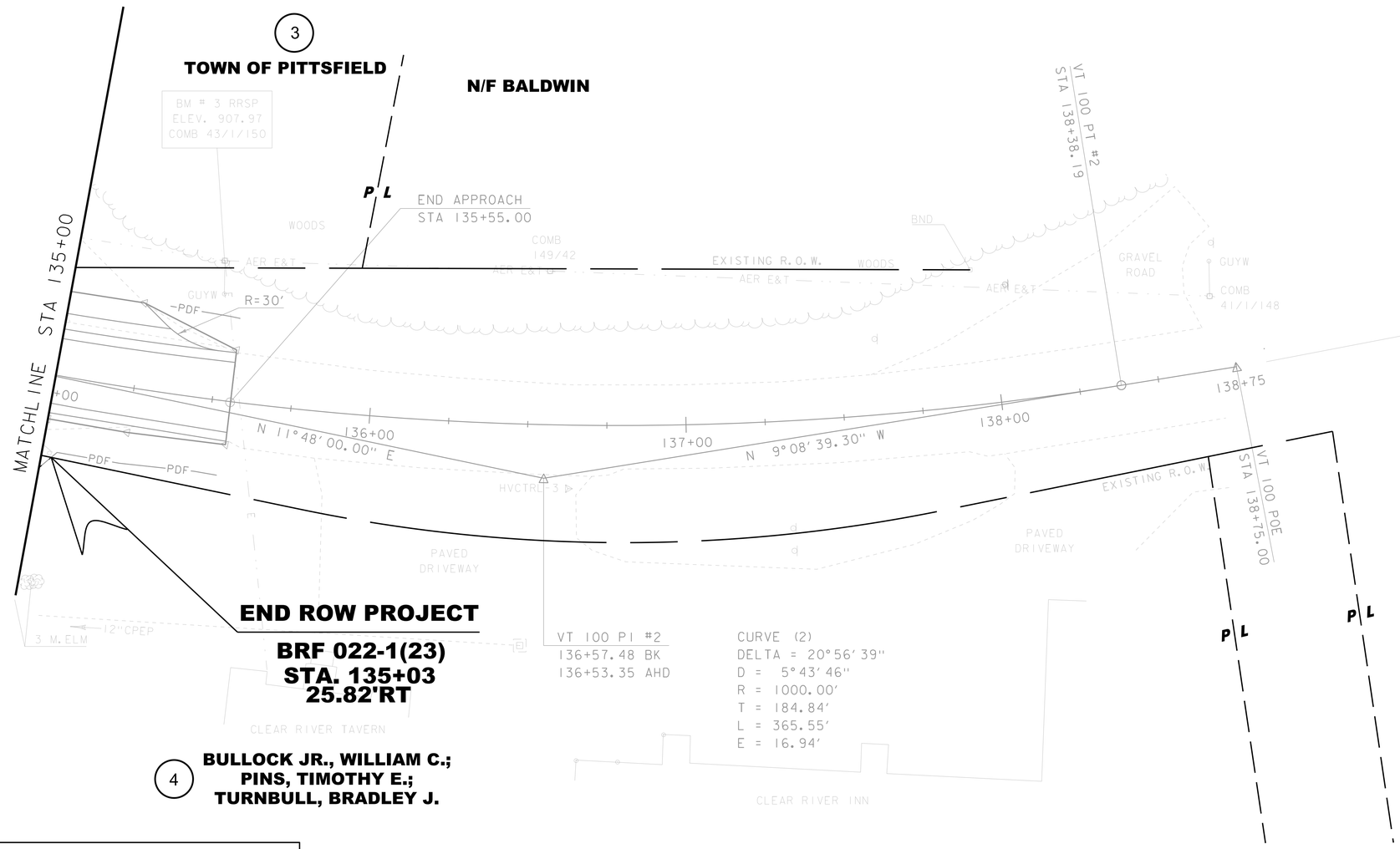

LINES SHOWN ON THIS PLAN AS EXISTING PROPERTY LINES P/L ARE BELIEVED TO BE ACCURATE BUT SHOULD NOT BE RELIED UPON FOR PURPOSES UNRELATED TO THE STATE OF VERMONT'S ACQUISITION OF LAND AND RIGHTS FOR THIS PROJECT.

FOR R.O.W. USE ONLY

LAYOUT SHEET 3

SCALE 1" = 20'-0"

20 0 20

PROJECT NAME: PITTSFIELD	
PROJECT NUMBER: ER BRF 022-1(23)	
FILE NAME: r86e060_lay3.dgn	PLOT DATE: 18-SEP-2013
PROJECT LEADER: K. HIGGINS	DRAWN BY: K. FRIEDLAND
DESIGNED BY: J. SALVATORI	CHECKED BY: J. SALVATORI
ROW LAYOUT SHEET 3 OF 3	SHEET 67 OF 67

CONCRETE GENERAL NOTES

1. ALL EXPOSED EDGES OF CONCRETE SHALL BE CHAMFERED 1" x 1"

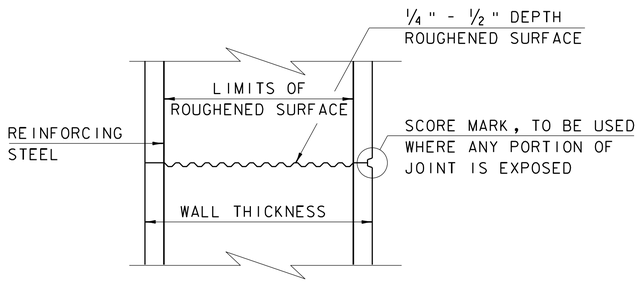

TYPICAL HORIZONTAL CONSTRUCTION JOINT
(NOT TO SCALE)

1. THE SURFACE OF THE CONCRETE CONSTRUCTION JOINTS SHALL BE CLEANED AND FREE OF LAITANCE.

2. IMMEDIATELY BEFORE NEW CONCRETE IS PLACED, ALL CONSTRUCTION JOINTS SHALL BE WETTED AND STANDING WATER REMOVED.

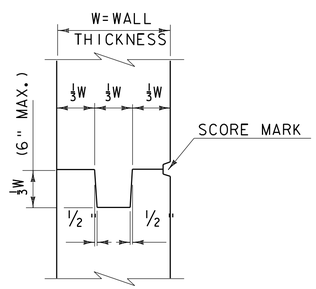

TYPICAL CONCRETE CONSTRUCTION JOINT
(NOT TO SCALE)

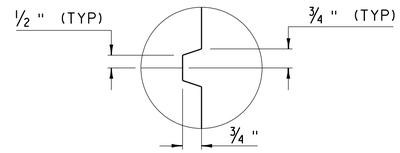

SCORE MARK DETAIL
(NOT TO SCALE)

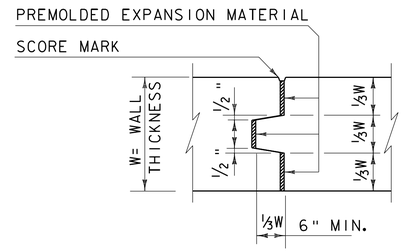

TYPICAL CONCRETE EXPANSION JOINT
(NOT TO SCALE)

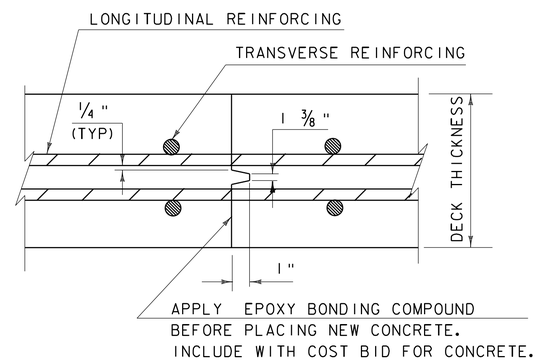

TRANSVERSE BRIDGE SLAB CONSTRUCTION JOINT DETAILS
(NOT TO SCALE)

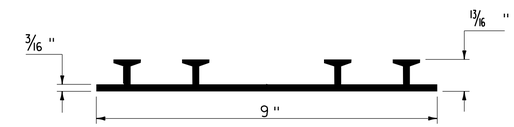

P.V.C. WATERSTOP FOR CONSTRUCTION JOINTS
(NOT TO SCALE)

PAYMENT FOR THE P.V.C. WATERSTOP SHALL BE INCIDENTAL TO THE UNIT BID PRICE FOR THE ADJACENT CONCRETE.

OTHER CONFIGURATIONS OF WATERSTOP MAY BE USED UPON APPROVAL OF THE ENGINEER.

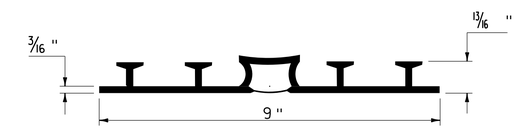

P.V.C. WATERSTOP FOR EXPANSION JOINTS
(NOT TO SCALE)

PAYMENT FOR THE P.V.C. WATERSTOP SHALL BE INCIDENTAL TO THE UNIT BID PRICE FOR THE ADJACENT CONCRETE.

OTHER CONFIGURATIONS OF WATERSTOP MAY BE USED UPON APPROVAL OF THE ENGINEER.

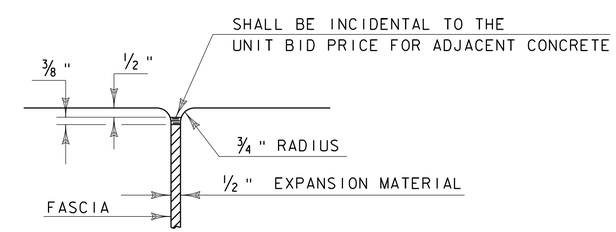

JOINT BETWEEN FASCIA AND WINGWALL
(NOT TO SCALE)

REVISIONS	
MAY 7, 2010	APPROVED FOR USE BY VAOT STRUCTURES SECTION

CONCRETE DETAILS AND NOTES

VERMONT AGENCY OF TRANSPORTATION
STRUCTURES - SECTION

STRUCTURES DETAIL
SD-501.00

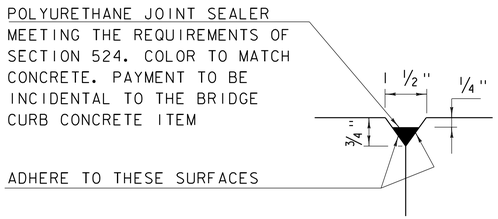

DETAIL "B"
(NOT TO SCALE)

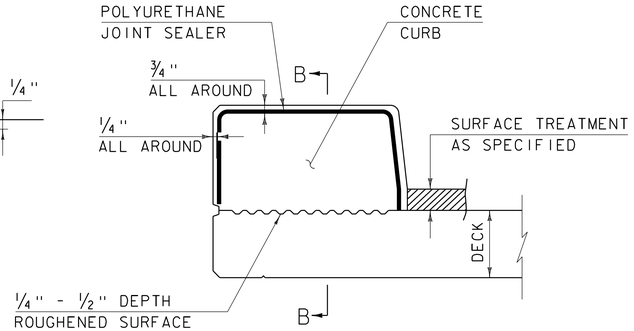

CONCRETE CURB JOINT SECTION
(NOT TO SCALE)

1. SEE TYPICAL HORIZONTAL CONSTRUCTION JOINT DETAIL FOR ADDITIONAL INFORMATION

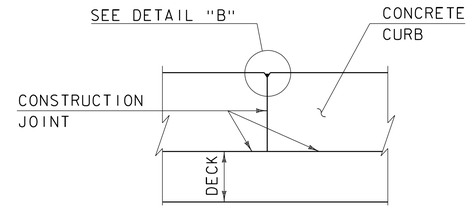

SECTION B - B
(NOT TO SCALE)

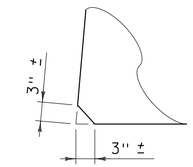

ACUTE ANGLE CLIP DETAIL
(NOT TO SCALE)

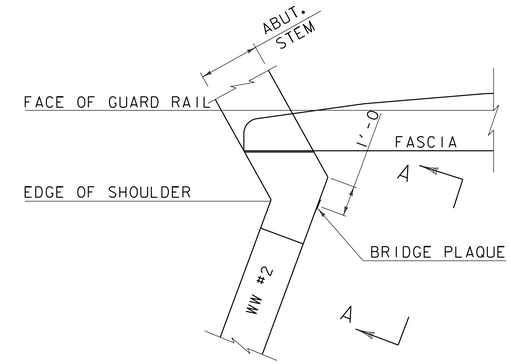

PLAN

CONCRETE CURB JOINT NOTES

1. CONCRETE CURBS MAY BE PLACED IN ONE CONTINUOUS OPERATION IF AN APPROVED SHRINKAGE REDUCING ADMIXTURE LISTED IN THE SPECIAL PROVISIONS IS USED WITH THE CONCRETE MIX DESIGN. PAYMENT FOR THE SHRINKAGE REDUCING ADMIXTURE WILL BE INCIDENTAL TO THE BRIDGE CURB CONCRETE ITEM.

2. IF THE CONTRACTOR CHOOSES NOT TO USE AN APPROVED SHRINKAGE REDUCING ADMIXTURE, THE CURBS SHALL BE CONSTRUCTED WITH CONSTRUCTION JOINTS SPACED AT A MAXIMUM OF 15'-0" CENTER TO CENTER AND 2'-0" MINIMUM FROM THE CENTER OF NEAREST BRIDGE RAILING POST.

3. ON MULTI-SPAN CONTINUOUS SUPERSTRUCTURES, REGARDLESS OF WHETHER APPROVED SHRINKAGE REDUCING ADMIXTURE IS USED, CURB JOINTS SHALL BE LOCATED OVER THE CENTERLINE OF PIERS AND 7'-0" EACH SIDE OF THE CENTERLINE OF EACH PIER.

4. WHEN CURB JOINTS ARE USED THE CURBS SHALL BE PLACED IN ALTERNATE SECTIONS WITH A MINIMUM OF 48 HOUR DELAY BETWEEN ADJACENT PLACEMENTS.

5. LONGITUDINAL REINFORCING SHALL BE CONTINUOUS THROUGH CURB CONSTRUCTION JOINTS. CURB STIRRUP BARS SHALL BE TURNED AS NECESSARY TO MAINTAIN COVER IN THE FLARED CURB ENDS.

6. THE JOINT SPACING AND DETAILS SHOWN SHALL APPLY TO SIDEWALKS WHEN SHOWN IN THE PLANS.

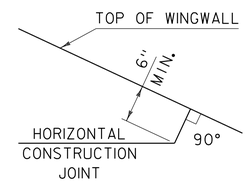

HORIZONTAL WINGWALL CONSTRUCTION JOINT
(NOT TO SCALE)

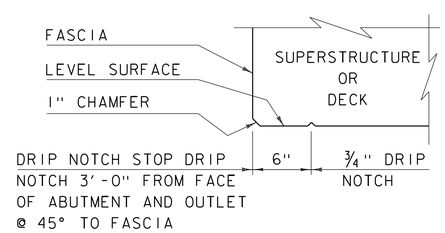

DRIP NOTCH DETAIL
(NOT TO SCALE)

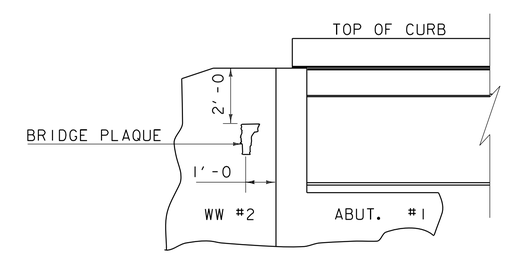

VIEW "A - A"

BRIDGE PLAQUE
(NOT TO SCALE)

THE BRIDGE PLAQUE WILL BE SUPPLIED BY THE AGENCY OF TRANSPORTATION AND SHALL BE INSTALLED BY THE CONTRACTOR AT ABUTMENT #1 ON THE RIGHT SIDE AS SHOWN OR AS DIRECTED BY THE ENGINEER.

PAYMENT FOR INSTALLATION OF THE BRIDGE PLAQUE SHALL BE INCIDENTAL TO THE ADJACENT CONCRETE.

REVISIONS

MAY 7, 2010	APPROVED FOR USE BY VAOT STRUCTURES SECTION
JUNE 4, 2010	MODIFIED AND ADDED TWO DETAILS
OCTOBER 10, 2012	MODIFIED HORZ. JOINT WINGWALL ADD 6" MIN. DIMENSION

CONCRETE DETAILS AND NOTES

VERMONT AGENCY OF TRANSPORTATION
STRUCTURES - SECTION

STRUCTURES DETAIL
SD-502.00

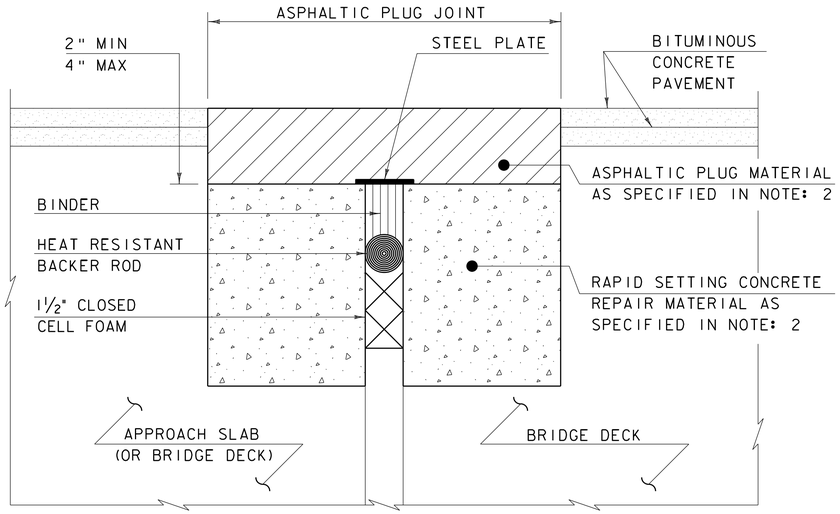

ASPHALTIC PLUG-TYPE JOINT DETAIL - REHAB

NOTES: (NOT TO SCALE)

1. THE CONTRACTOR SHALL REMOVE ALL ASPHALTIC PLUG JOINT MATERIAL AND DETERIORATED CONCRETE AS DIRECTED BY THE ENGINEER. REMOVAL OF THE FIRST 4 INCHES OF MATERIAL SHALL BE INCLUDED IN THE BID PRICE FOR ITEM 516.10 BRIDGE EXPANSION JOINT, ASPHALTIC PLUG. ANY REMOVAL OF MATERIAL GREATER THAN 4 INCHES SHALL BE INCLUDED IN THE BID PRICE OF ITEM 580.20 RAPID SETTING CONCRETE REPAIR MATERIAL WITH COURSE AGGREGATE.

2. THE CONTRACTOR SHALL REPLACE REMOVED MATERIAL THAT IS LESS THAN 4" FROM FINISHED GRADE WITH ASPHALTIC PLUG JOINT MATERIAL MEETING THE REQUIREMENTS OF SUBSECTION 707.15. ALL REMOVED MATERIAL THAT IS GREATER THAN 4 INCHES FROM FINISHED GRADE SHALL BE REPLACED WITH RAPID SETTING CONCRETE REPAIR MATERIAL WITH COARSE AGGREGATE MEETING THE REQUIREMENTS OF SUBSECTION 780.04.

3. REINFORCING STEEL NOT SHOWN FOR CLARITY.

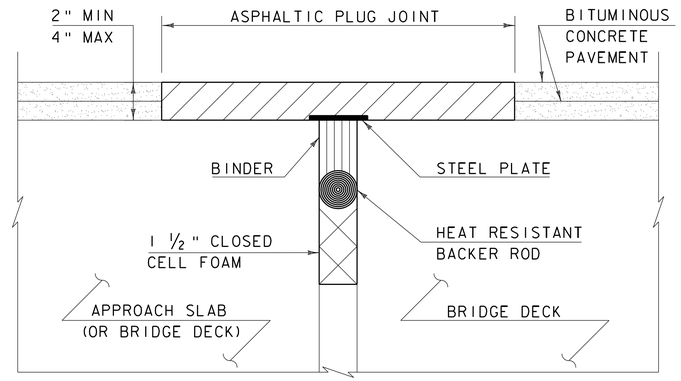

ASPHALTIC PLUG-TYPE JOINT DETAIL - NEW

(NOT TO SCALE)

ASPHALTIC PLUG JOINT NOTES

INSTALLATION:

1. LOCATE THE JOINT CENTRALLY OVER THE DECK OVERLAY EXPANSION GAP OR FIXED JOINT, MARKED OUT TO THE MANUFACTURER'S RECOMMENDED WIDTH.

2. REMOVE THE BITUMINOUS CONCRETE PAVEMENT FULL DEPTH AS SHOWN ON THE PLANS. THE PAVEMENT SHALL BE DRY AND SAW CUT TO THE LIMITS REQUIRED TO PLACE THE JOINT. A PNEUMATIC HAMMER AND CHISEL MAY BE USED ADJACENT TO THE CURB ONLY WHEN SAW CUTTING IS NOT POSSIBLE.

3. BLAST CLEAN THE JOINT AREA OF DEBRIS, ASPHALT AND SHEET MEMBRANE. THOROUGHLY DRY THE JOINT AREA WITH COMPRESSED AIR PRIOR TO APPLYING BINDER MATERIAL.

4. REPAIR MATERIAL GREATER THAN 4 INCHES FROM FINISHED GRADE WITH RAPID SETTING CONCRETE REPAIR MATERIAL WITH COARSE AGGREGATE MEETING THE REQUIREMENTS OF SUBSECTION 780.04.

5. PLACE PROPERLY SIZED HEAT RESISTANT BACKER ROD IN THE MOVEMENT GAP ALLOWING FOR 1" +/- OF BINDER ABOVE THE ROD.

6. HEAT AND PLACE THE BINDER MATERIAL AS RECOMMENDED BY THE MANUFACTURER.

7. PLACE 1/4" THICK BY 8" WIDE SECTIONS OF STEEL PLATE OVER THE CENTER OF THE MOVEMENT GAP. SECURE THE PLATES FROM MOVING BY INSERTING LOCATING PINS THROUGH THE PRE-STAMPED HOLES INTO BACKER ROD AND COVER WITH HOT BINDER. THE STEEL PLATES MAY BE OMITTED WHERE THE ENGINEER DETERMINES THAT THE APPROACH SLAB OR BRIDGE DECK WILL PROVIDE INADEQUATE SUPPORT AND WHERE VERTICAL MOVEMENT OF THE PLATES MIGHT OCCUR.

8. HEAT AND MIX THE BINDER MATERIAL AND AGGREGATE AS RECOMMENDED BY THE MANUFACTURER.

9. INSTALLATION OF MATERIAL, COMPACTION, AND TOP COATING SHALL BE AS RECOMMENDED BY THE MANUFACTURER.

10. IMMEDIATELY AFTER TOP COATING, CAST AN ANTI-SKID MATERIAL OVER THE JOINT TO REDUCE THE RISK OF TRACKING.

11. ONCE THE JOINT REACHES 82 DEG C (180 DEG F) +/-, WATER MAY BE USED TO EXPEDITE THE COOLING PROCESS.

12. PROTECT JOINT FROM TRAFFIC UNTIL THE MATERIAL HAS COOLED TO 51 DEG C (125 DEG F) +/-.

WEATHER LIMITATIONS

APPLY BINDER MATERIAL ONLY WHEN THE FOLLOWING CONDITIONS PREVAIL OR AS RECOMMENDED BY THE MANUFACTURER:

1. THE AMBIENT AIR TEMPERATURE IS AT LEAST 10 DEG C (50 DEG F) AND RISING.

2. THE ROAD SURFACE IS DRY.

3. WEATHER CONDITIONS OR OTHER CONDITIONS ARE FAVORABLE AND ARE EXPECTED TO REMAIN SO FOR THE PERFORMANCE OF SATISFACTORY WORK.

REVISIONS	
MAY 7, 2010	APPROVED FOR USE BY VAOT STRUCTURES SECTION

BRIDGE JOINT ASPHALTIC PLUG

VERMONT AGENCY OF TRANSPORTATION
STRUCTURES - DIVISION

STRUCTURES DETAIL

SD-516.10

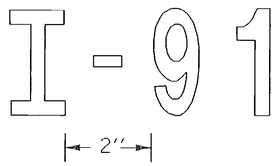

HYPHENATED WORD DETAIL

FOR EXAMPLE, ROUTE NUMBERS SHALL APPEAR AS: I-91, US5, VT22

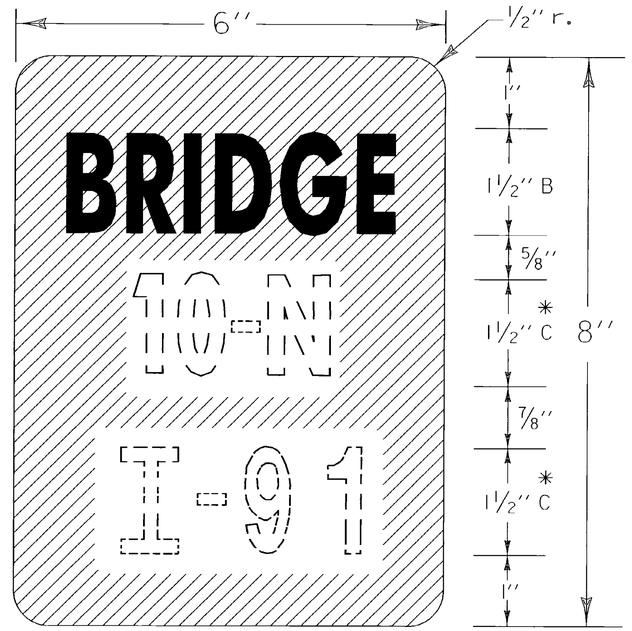

VD-701

* OPTICALLY SPACE BRIDGE AND ROUTE NUMBERS. SERIES B LETTERS MAY BE USED TO MAINTAIN VISUAL INTEGRITY.

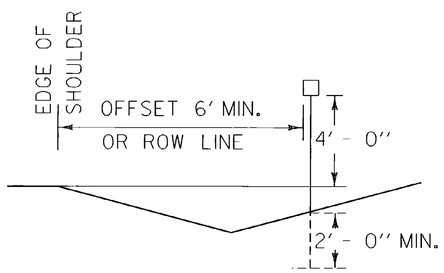

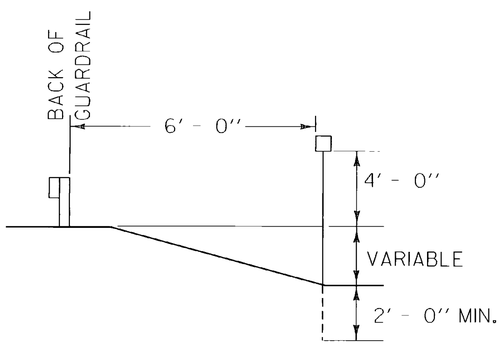

NOTES:

GENERAL:
DOTTED LINES AND NUMERALS INDICATE TEXT THAT VARIES.

PAYMENT:
BRIDGE PLAQUES SHALL BE PAID AS TRAFFIC SIGNS, TYPE 'A', AND POSTS PAID AS FLANGED CHANNEL STEEL SIGN POSTS.

MATERIAL:
THE SIGN BASE MATERIAL SHALL BE 0.04" FLAT SHEET ALUMINUM.

COLORS:
THE SIGN SHALL HAVE A REFLECTORIZED WHITE TEXT ON REFLECTORIZED GREEN BACKROUND. THE COLORS SHALL CONFORM WITH THOSE FOUND IN STANDARD COLOR TOLERANCE CHARTS AS APPROVED BY THE U.S. DEPARTMENT OF TRANSPORTATION, FEDERAL HIGHWAYADMINISTRATION.

LETTERING:
LETTERS AND DIGITS SHALL CONFORM WITH THE STANDARD ALPHABETS FOR HIGHWAY SIGNS AS PRINTED BY THE FEDERAL HIGHWAY ADMINISTRATION.

POSTS:
FLANGED CHANNEL STEEL 2#/FT POSTS SHALL BE USED WHEN THE POST LENGTH EXCEEDS 7 FEET. FOR LENGTH OF 7 FEET OR LESS, A 1.12#/FT STEEL SIGN POST SHALL BE USED.

OTHER STDS. REQUIRED:

REVISIONS AND CORRECTIONS

DEC. 17, 1989 - DATE OF ORIGINAL ISSUE
AUG. 08, 1995 - MISC NOTE REVISIONS

APPROVED FOR THIS PROJECT AND/OR DESIGN IMPLEMENTATION. FHWA FINAL APPROVAL PENDING.

APPROVED

Gordon S. MacCallum
DIRECTOR OF ENGINEERING

David A. Ross
TRAFFIC AND SAFETY ENGINEER

BRIDGE NUMBER PLAQUE

/traf/std/stdel34.dgn : stdel34.i

VERMONT AGENCY OF TRANSPORTATION

STANDARD
E-134

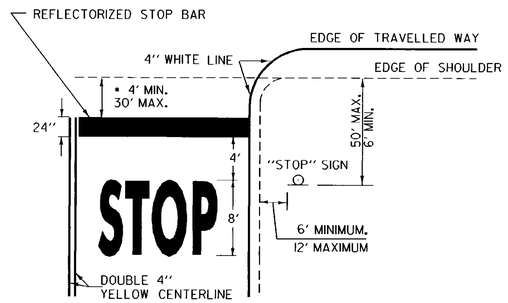

• THE "DESIRED STOPPING POINT" IS THE LOCATION BASED ON SITE CONDITIONS THAT BEST ALLOWS THE STOPPED VEHICLE TO VIEW THE APPROACHING TRAFFIC.

STOP BAR LAYOUT

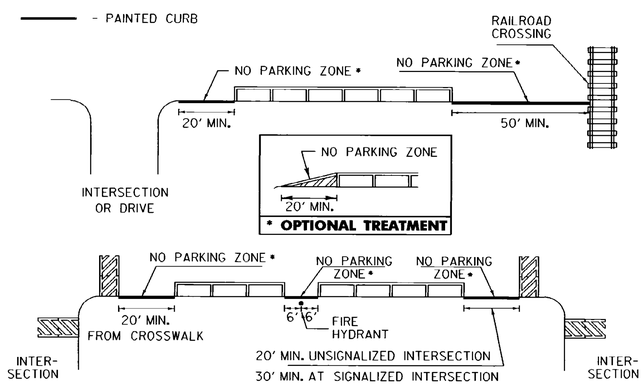

NO PARKING LAYOUT DETAILS

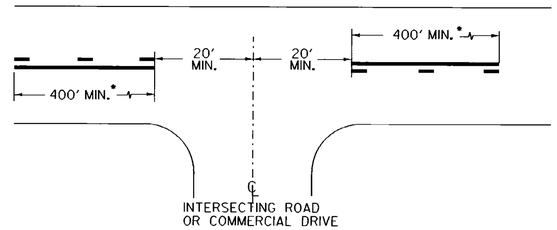

• THE SOLID LINE SHALL BE PAIRED WITH EITHER A SOLID OR DASHED LINE DEPENDING ON SIGHT DISTANCE AVAILABILITY IN THE OPPOSING DIRECTION. ADJUSTMENTS TO THE 40 FOOT CENTERLINE OPENING MAY BE MADE TO ACCOMMODATE SKEWED INTERSECTIONS.

CENTERLINE BREAKES:

A. AT ALL STATE HIGHWAYS AND TOWN HIGHWAYS, INCLUDING CLASS 4 TH'S. THAT HAVE STOP AND LEGAL LOAD LIMIT SIGNS INSTALLED

B. COMMERCIAL DRIVES:

1. WHERE A SEPERATE TURN LANE EXISTS ON THE MAIN LINE (LT. OR RT.)
2. SIGNIFICANT TRAFFIC VOLUMES EXISTS.
3. IF MOTORISTS NEED ASSISTANCE TO DEFINE ENTRANCE POINTS.

CENTERLINE LAYOUT

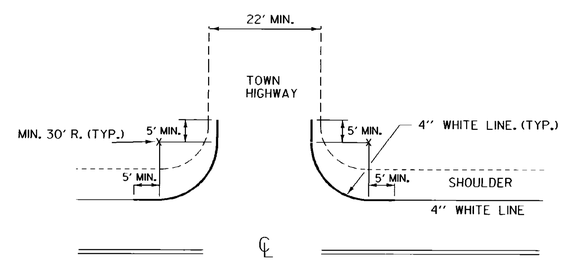

EDGELINES SHALL BE APPLIED TO ALL STATE HIGHWAYS AND SHOULD BE MAINTAINED AT A CONSTANT DISTANCE FROM THE CENTERLINE UNLESS PAVEMENT WIDTH INCREASES TO ALLOW WIDER LANES.

APPLY EDGELINE AS DETAILED ON ALL PAVED CLASS 1 & CLASS 2 TOWN HIGHWAYS AND ANY CLASS 3 TOWN HIGHWAY 22 FEET OR MORE IN WIDTH.

IF MIN. 30 FOOT RADIUS CANNOT BE OBTAINED, OR THE TOWN HIGHWAY IS NOT PAVED, BREAK THE EDGELINE USING AN 80 FOOT GAP AT INTERSECTION.

EDGELINE LAYOUTS

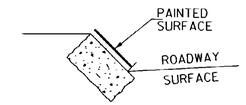

GRANITE SLOPE EDGING

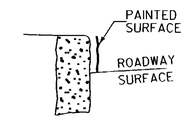

VERTICAL GRANITE CURB

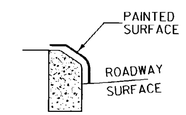

TYPE A (CONCRETE)

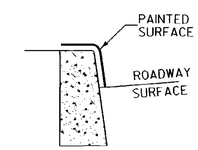

TYPE B (CONCRETE)

PAINTED CURB

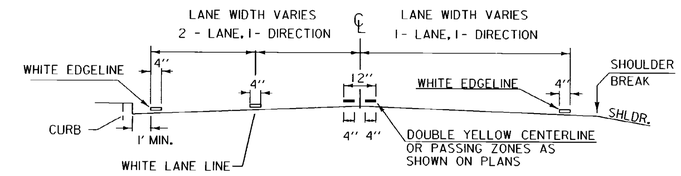

PAVEMENT MARKING PLACEMENT DETAIL

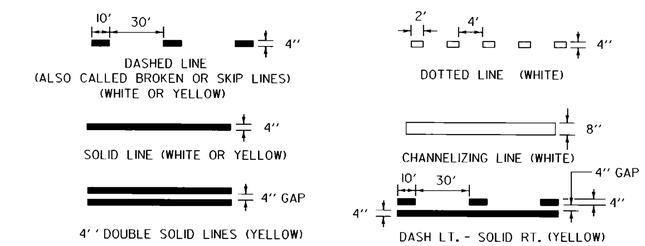

PAVEMENT MARKING LINE DETAILS

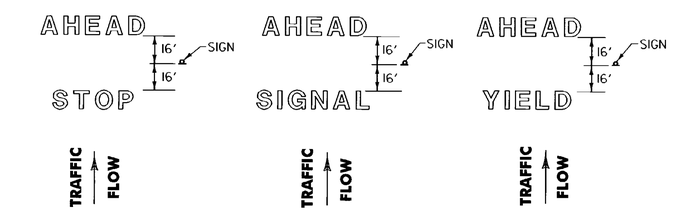

LETTER IN WORD MARKING SPACING DETAIL

NOTE: SINGLE WORDS CENTERED ON SIGN ie: SCHOOL OR YIELD

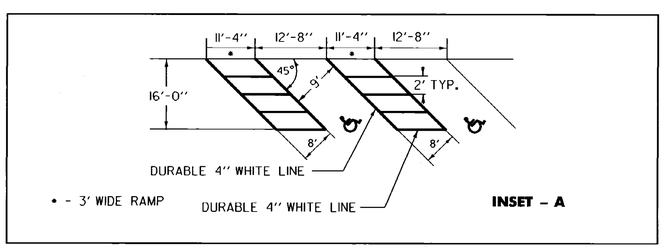

INSET - A

NOTE:

SEE STANDARD SHEET E-191 FOR HANDICAP SYMBOL POSITIONING AND DETAIL.

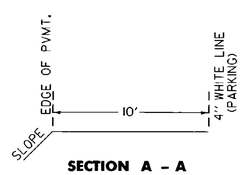

SECTION A - A

TRUCK PARKING DETAIL

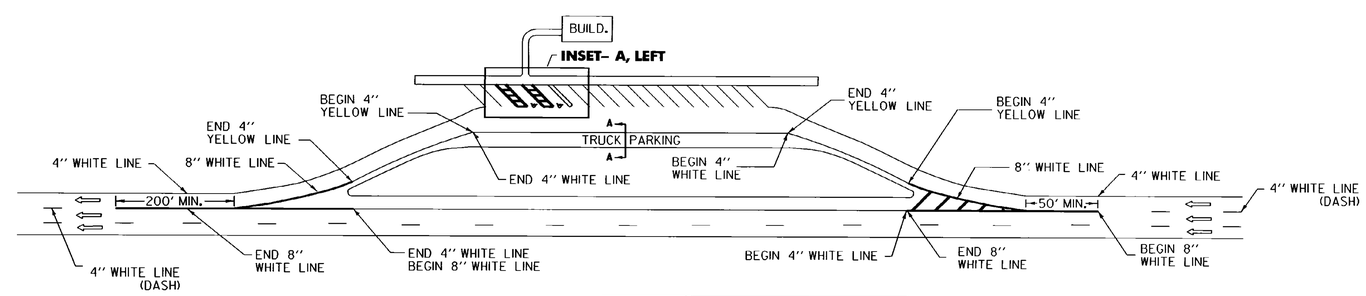

REST AREA PARKING DETAILS

THIS SHEET IS NOT TO SCALE

OTHER STDS. E - 191, E - 192 REQUIRED

REVISIONS AND CORRECTIONS

AUG. 18, 1995 - DATE OF ORIGINAL ISSUE

APPROVED FOR THIS PROJECT AND/OR DESIGN IMPLEMENTATION. FHWA FINAL APPROVAL PENDING.

APPROVED

DIRECTOR OF ENGINEERING

TRAFFIC AND SAFETY ENGINEER

PAVEMENT MARKING DETAILS

/traf/std/stdel93.dgn/stdel93.i

VERMONT AGENCY OF TRANSPORTATION

STANDARD

E-193

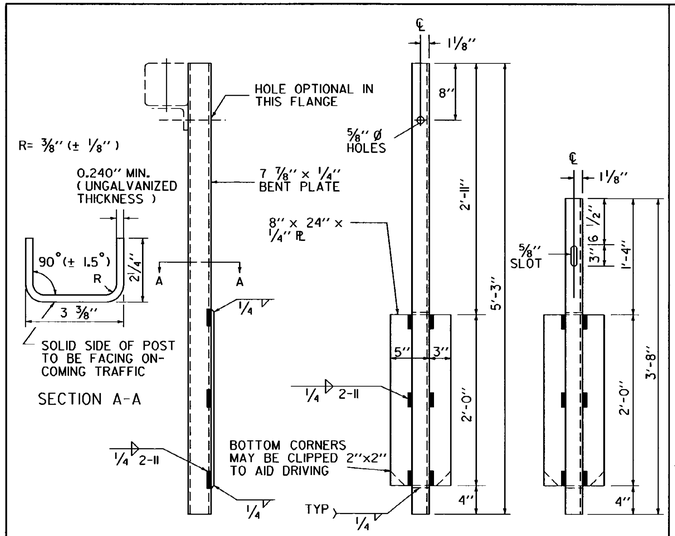

ALTERNATE POST (BENT PLATE)
(STD. HM-TF-13 P-49-76)

END POST DETAIL

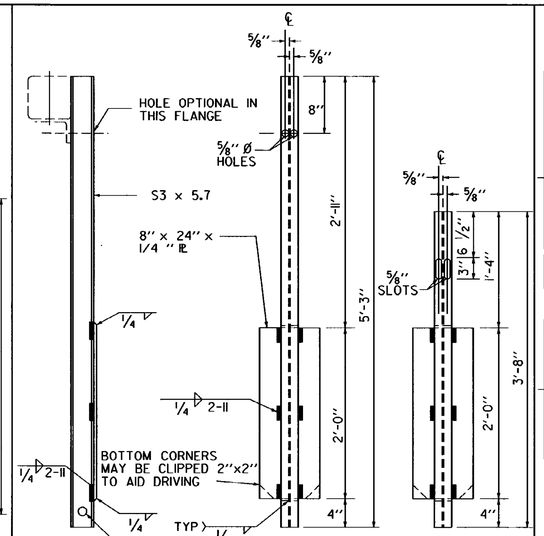

S3 X 5.7 POST
(STD. HM-TF-13 P-4-76)

END POST DETAIL

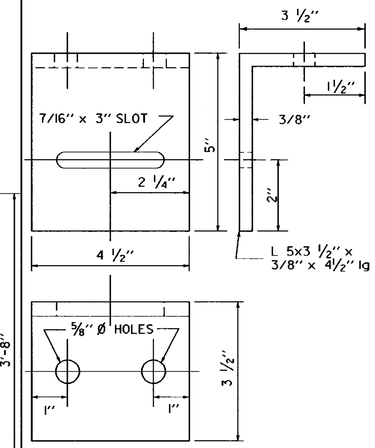

RAIL SUPPORT ANGLE
(STD. HM-TF-13 P-5-76)

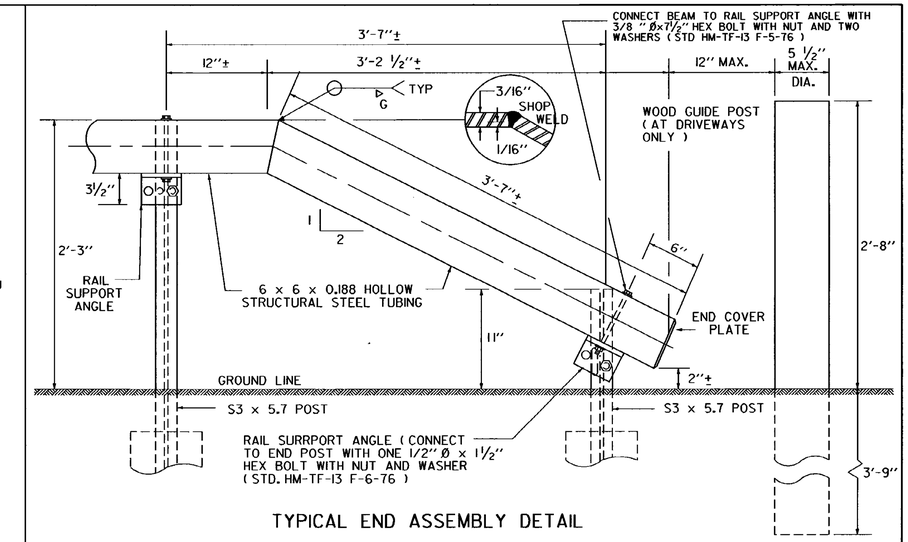

TYPICAL END ASSEMBLY DETAIL

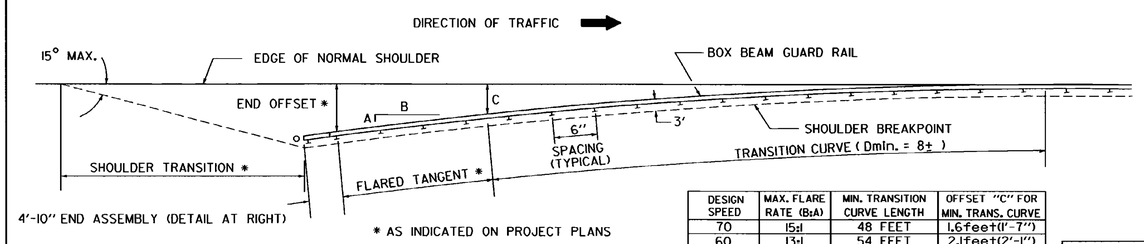

* AS INDICATED ON PROJECT PLANS

DESIGN SPEED	MAX. FLARE RATE (B:A)	MIN. TRANSITION CURVE LENGTH	OFFSET "C" FOR MIN. TRANS. CURVE
70	15:1	48 FEET	1.6feet(1'-7")
60	13:1	54 FEET	2.1feet(2'-1")
50	11:1	66 FEET	3.0feet(3'-0")
40	9:1	78 FEET	4.3feet(4'-4")

PLAN OF FLARED APPROACH

GENERAL NOTES

1. THE DESIRED APPROACH END OFFSET SHOULD BE AT LEAST 8' FROM THE EDGE OF NORMAL SHOULDER WHERE SPACE PERMITS; IN SPECIAL CASES, THE END OFFSET MAY BE REDUCED. IN NO CASE, HOWEVER, WILL THE END OFFSET BE LESS THAN 4'.
2. POST SPACING WILL BE 6'-0" C-C, EXCEPT IN THE VICINITY OF THE JUNCTION OF BOX BEAM GUARD RIAL AND BRIDGE RAILING, AND AT OTHER LOCATONS INDICATED ON THE PLANS. AT BRIDGE APPROACHES, THE 50' SECTION ADJACENT TO THE BRIDGE RAILING WILL HAVE A POST SPACING OF 4'-0" C-C.
3. FOR MATERIAL REQUIREMENTS AND CONSTRUCTION DETAILS SEE SPECIFICATIONS FOR BOX BEAM GUARD RAIL.
4. RAIL ALIGNMENT TO BE STRAIGHT AT SPLICES. NO LATERAL BENDS PERMITTED WITHIN THE SPLICE. THIS DOES NOT PRECLUDE THE SHOP FABRICATION OF BENT SPLICES.
5. THE LINE OF BOX BEAM GUARD RAIL WHEN COMPLETED SHALL PRESENT A SMOOTH AND PLEASING GRADE LINE IN BOTH HORIZONTAL AND VERTICAL PLANES.
6. ALL POSTS IN A GIVEN RUN TO BE OF THE SAME TYPE.

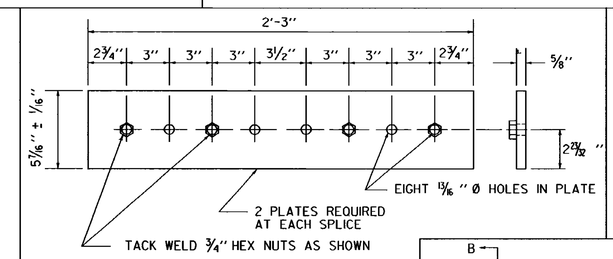

SPLICE PLATE DETAIL
(STD. HM-TF-13 RE-11-73)

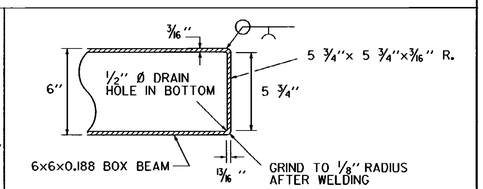

END COVER PLATE DETAIL

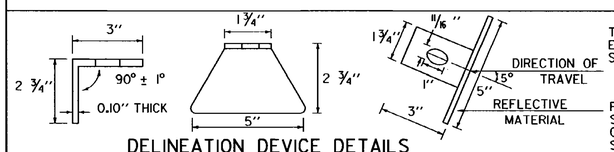

DELINEATION DEVICE DETAILS

THIS REFLECTORIZED ALUMINUM DELINEATION DEVICE IS TO BE ERECTED EVERY 36 FEET, AT SPLICES. DELINEATOR SHALL MEET SPECIFICAITON REQUIRMENTS FOR ASTM B209 ALLOY 5052-H32.

REFLECTIVE MATERIAL SHALL MEET THE REQUIREMENTS OF SUBSECTION 750.09 AND SHALL BE OF ENCAPSULATED LENS SILVER OR AMBER. AMBER IS TO BE INSTALLED ON THE LEFT OR MEDIAN SIDE OF INTERSTATE ROADWAYS OR RAMPS.

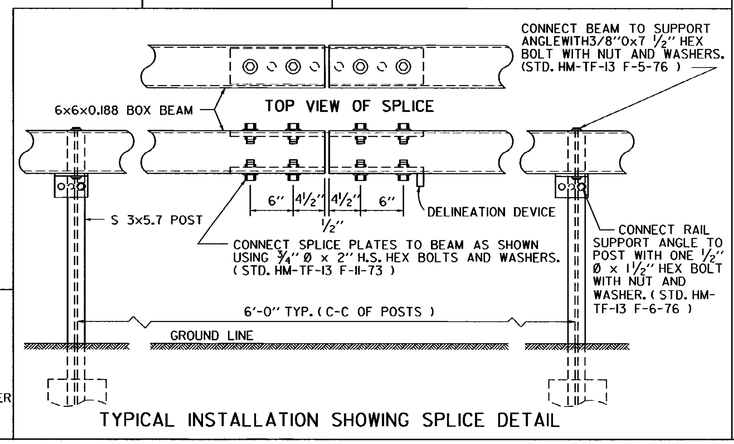

TYPICAL INSTALLATION SHOWING SPLICE DETAIL

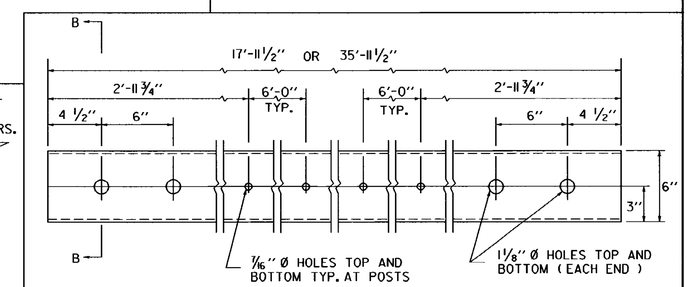

NOTES:

1. RAIL SECTIONS FOR TANGENT RUNS WILL BE EITHER 17'-11 1/2" OR 35'-11 1/2" IN LENGTH.
2. ON CURVES, CHORD LENGTHS WILL BE NO LESS THAN 12 FEET.
3. FOR CURVES GREATER THAN 8°, RAIL SECTIONS SHALL BE SHOPFORMED TO THE REQUIRED CURVATURE. PAYMENT OF SUCH SHOP WORK WILL BE CONSIDERED TO BE SUBSIDIARY TO BOX BEAM GUARD RAIL.
4. WELD OR GALVANIZING PROTRUSIONS WILL NOT BE PERMITTED ON TOP OR BOTTOM INSIDE WALLS IN SPLICE AREA.

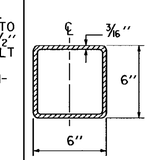

SECTION B-B

6x6x0.188 BOX BEAM RAIL ELEMENT
(STD. HM-TF-13 RE-10-76)

REVISIONS AND CORRECTIONS

OCT. 17, 1979- ORIGINAL APPROVAL DATE
JULY 23, 1980- CHANGED DIAMETER OF GUIDE POST
DEC. 16, 1980- INCREASED SHOULDER WIDENING FOR GUARD RAIL
JUNE 17, 1984- DELINEATOR DEVICE ADDED
DEC. 21, 1984- HEIGHT OF RAIL LOWERED FROM 2'-6" TO 2'-3"
OCT. 31, 1985- REVISED TO CONFORM TO 1986 SPECIFICATIONS
JUNE 1, 1994 - REISSUED, WITHOUT CHANGE, UNDER NEW SIGNATURES.

APPROVED

APPROVED FOR THIS PROJECT AND/OR DESIGN IMPLEMENTATION. FHWA FINAL APPROVAL PENDING.

Gordon B. MacArthur, P.E.
DIRECTOR OF ENGINEERING

Robert M. Murphy, P.E.
DESIGN ENGINEER

BOX BEAM GUARD RAIL

VERMONT AGENCY OF TRANSPORTATION

STANDARD
G-1b

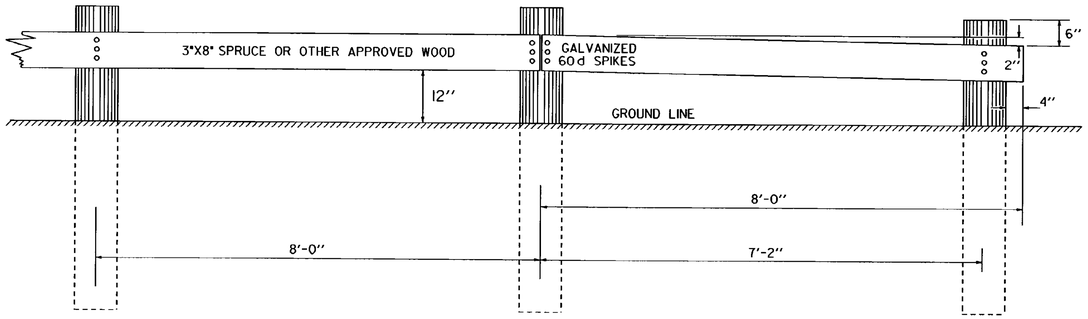

PLANK SIXTEEN FEET IN LENGTH TO BE USED WHEREVER POSSIBLE.
POSTS SIX (6) INCHES SQUARE MAY BE USED IN PLACE OF ROUND POSTS.
FIRST AND LAST POSTS OF EACH SECTION TO BE SET BACK TWELVE INCHES FROM THE GENERAL LINE OF POSTS, WHEN FOUR OR MORE POSTS ARE REQUIRED.
REFLECTIVE MATERIAL TO BE PLACED AS DIRECTED BY THE ENGINEER.
ALL WOOD MEMBERS SHALL BE GIVEN A PRESERATIVE TREATMENT.

PLANK RAIL

TO BE USED AS A BARRICADE OFF THE HIGHWAY

NOTCH TO BE TREATED WITH PRESERVATIVE BEFORE ERECTING PLANK.

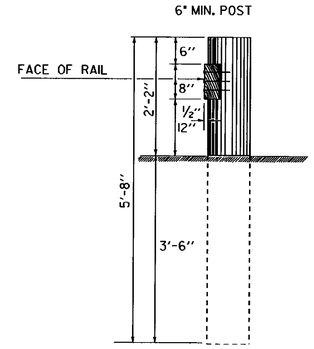

3" X 1½" REFLECTIVE ALUMINUM STRIP TO BE PLACED ON EVERY OTHER WOOD POST IN A LINE OF POSTS AND CLEARLY VISIBLE TO APPROACHING TRAFFIC.
STRIPS TO BE ATTACHED TO THE DESIGNATED RAIL POSTS ON BOTH SIDES OF THE ROAD AND VISIBLE TO TRAFFIC IN BOTH DIRECTIONS.

REFLECTIVE MATERIAL SHALL MEET THE REQUIREMENTS OF SUBSECTION 750.09 AND SHALL BE OF ENCAPSULATED LENS SILVER OR AMBER.

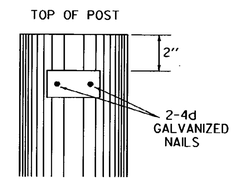

DELINEATION OF WOOD RAIL AND GUIDE POSTS

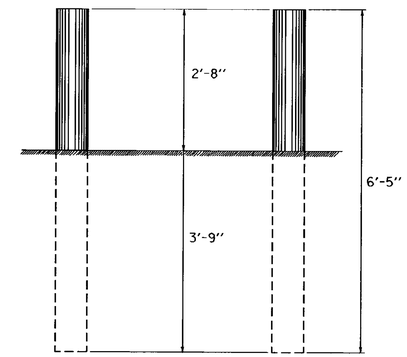

MARKER POSTS ARE TO BE 4" TO 5½" IN DIAMETER AND ARE TO BE PLACED AS DIRECTED BY THE ENGINEER.
POSTS SHALL BE GIVEN A PRESERVATIVE TREATMENT.

WOOD MARKER POSTS

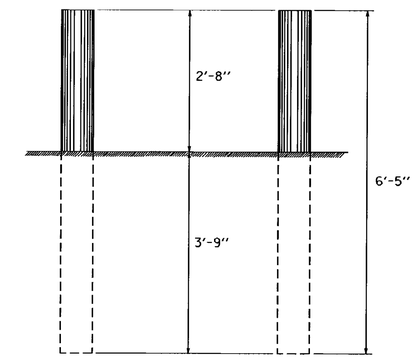

REFLECTIVE MATERIAL TO BE PLACED AS DIRECTED BY THE ENGINEER.

POSTS ARE TO BE 4" TO 5½" IN DIAMETER AND ARE TO BE PLACED AS DIRECTED BY THE ENGINEER.
POSTS SHALL BE GIVEN A PRESERVATIVE TREATMENT

WOOD GUIDE POSTS

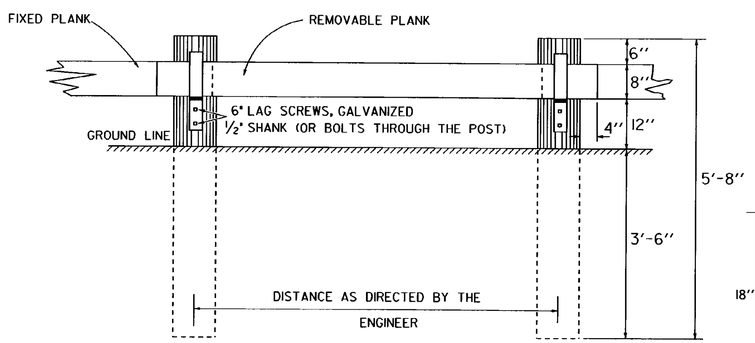

ENTRANCE THROUGH PLANK RAIL

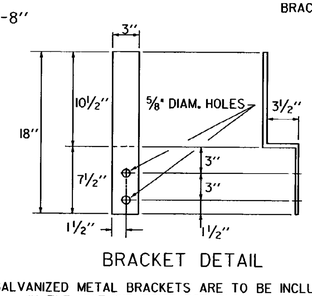

BRACKET DETAIL

GALVANIZED METAL BRACKETS ARE TO BE INCLUDED IN THE UNIT BID PRICE FOR PLANK RAIL.

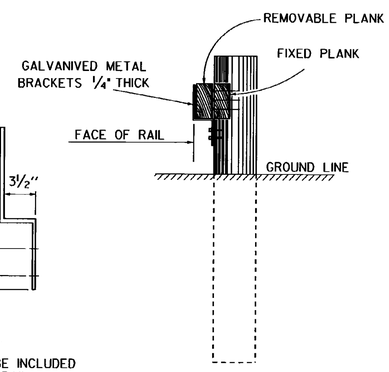

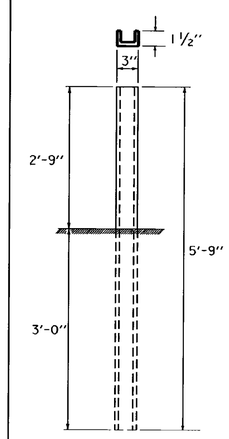

ALL STEEL MARKER POSTS TO BE GALVANIZED.
STEEL MARKER POSTS TO BE PLACED AS DIRECTED BY THE ENGINEER.

POSTS ARE TO BE AMERICAN STANDARD CHANNEL 5'-9" X 3". (4.1 LBS. PER FT.)

STEEL MARKER POSTS

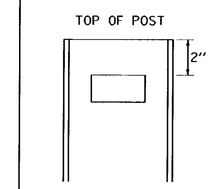

3" X 1½" REFLECTIVE STRIP TO BE APPLIED TO EVERY OTHER POST IN A LINE OF POSTS AND CLEARLY VISIBLE TO APPROACHING TRAFFIC.
STRIPS TO BE APPLIED TO THE DESIGNATED POSTS ON BOTH SIDES OF THE ROAD AND VISIBLE TO TRAFFIC IN BOTH DIRECTIONS.
REFLECTIVE MATERIAL SHALL MEET THE REQUIREMENTS OF SUBSECTION 750.09 AND SHALL BE OF ENCAPSULATED LENS SILVER OR AMBER.

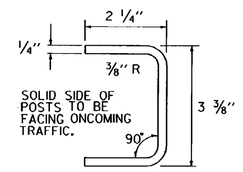

ALTERNATE POST

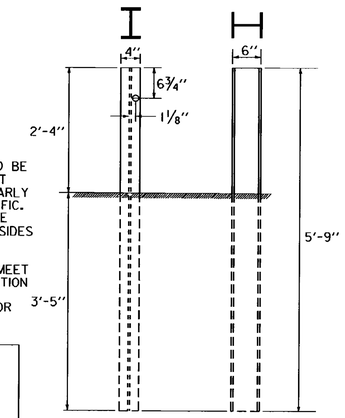

ALL STEEL GUIDE POSTS TO BE GALVANIZED.
REFLECTIVE MATERIAL TO BE PLACED AS DIRECTED BY THE ENGINEER.
POSTS ARE TO BE 5'-9" X 6" X 4" (8.5 LBS. PER FT.).

ALL POSTS IN A GIVEN RUN OF BARRIER TO BE UNIFORM.

STEEL GUIDE POSTS

REVISIONS AND CORRECTIONS

DEC. 8, 1971 - ORIGINAL APPROVAL DATE
MAY 23, 1974 - ALTERNATE POST ADDED
MAY 29, 1979 - NOTE ON REFLECTIVE MATERIAL CHANGED
JULY 23, 1980 - CHANGED DIAMETER OF WOOD MARKER POST & WOOD GUIDE POST
MAY 25, 1982 - REMOVED ALTERNATE POST DETAIL
OCT. 31, 1985 - REVISED TO CONFORM TO 1986 SPECIFICATIONS
JUNE 1, 1994 - REISSUED, WITHOUT CHANGE, UNDER NEW SIGNATURES.

APPROVED

APPROVED FOR THIS PROJECT AND/OR DESIGN IMPLEMENTATION. FHWA FINAL APPROVAL PENDING.

Gordon S. MacArthur, P.E.
DIRECTOR OF ENGINEERING

Alan R. Murphy, P.E.
DESIGN ENGINEER

PLANK RAIL
GUIDE POSTS
WOOD MARKER POSTS
STEEL MARKER POSTS

VERMONT AGENCY OF TRANSPORTATION

STANDARD
G-4

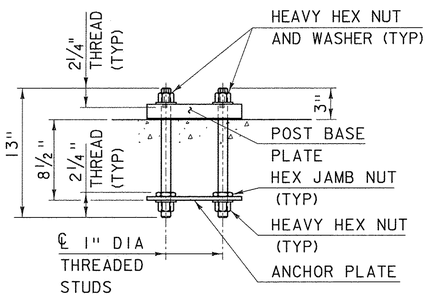

RAILING POST ANCHORAGE

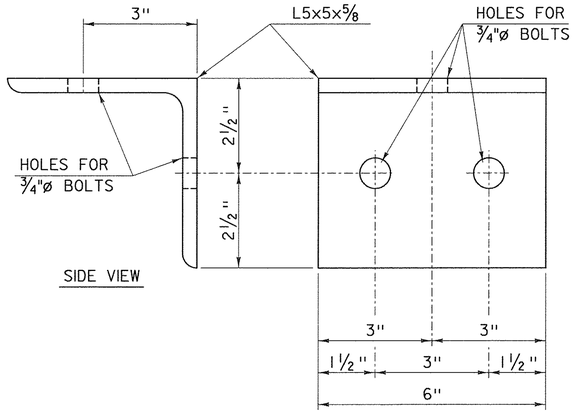

RAILING ANGLE DETAILS

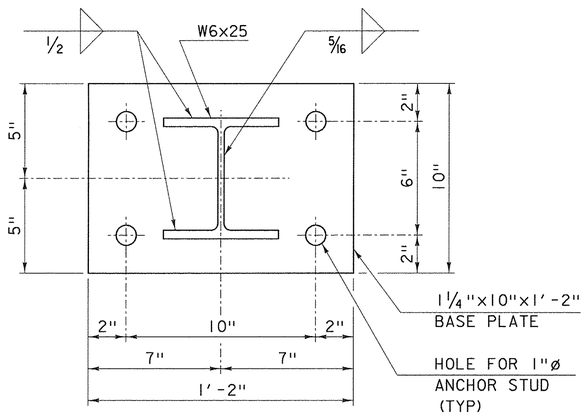

BASE PLATE DETAIL

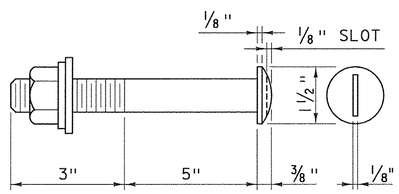

ROUND HEAD BOLT DETAIL

A449 (TYPE I)

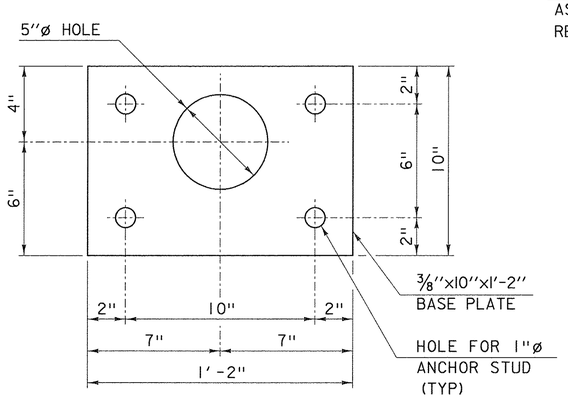

ANCHOR PLATE DETAIL

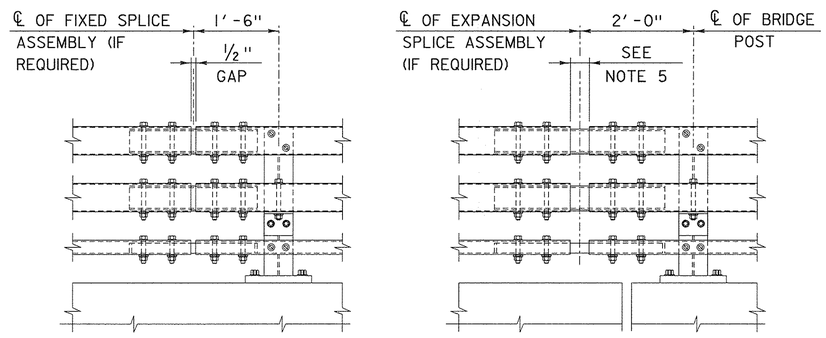

FIXED SPLICE

EXPANSION SPLICE

RAILING SPLICE DETAIL ELEVATION

A RAILING EXPANSION SPLICE IS REQUIRED IN ANY POST SPACING THAT CONTAINS A SUPERSTRUCTURE EXPANSION JOINT

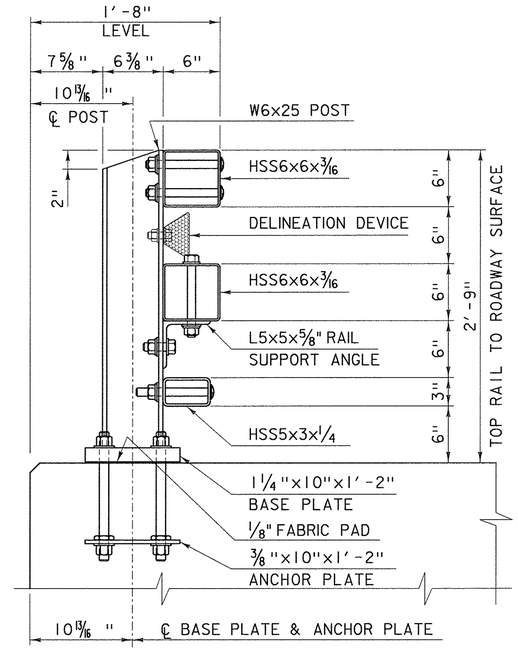

RAILING SECTION

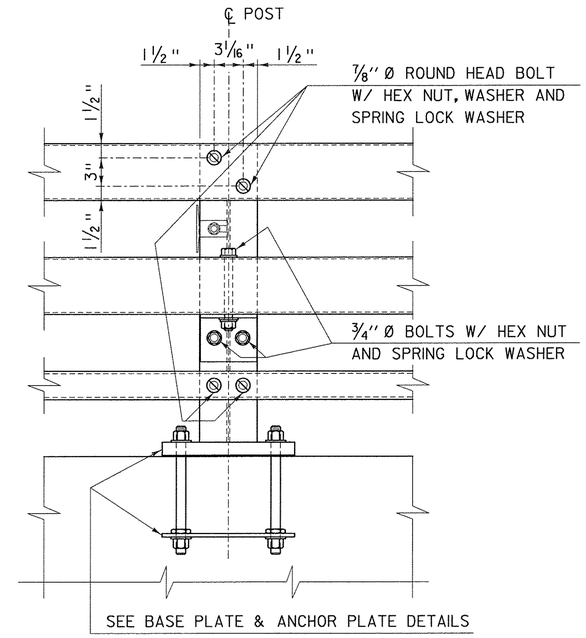

RAILING ELEVATION

NOTES:

1. ALL WORK AND MATERIALS SHALL CONFORM TO SECTION 525.
2. PRIOR TO GALVANIZING THE ASSEMBLED POST, GRIND ALL EDGES TO A MINIMUM RADIUS OF 1/16".
3. ALL POSTS SHALL BE SET NORMAL TO GRADE. THE MAXIMUM CENTER TO CENTER SPACING OF BRIDGE RAIL POSTS IS 8'-3".
4. SECTIONS OF RAIL TUBE SHALL BE ATTACHED TO A MINIMUM OF TWO BRIDGE POSTS AND PREFERABLY TO AT LEAST 4 POSTS.
5. RAIL TUBE EXPANSION JOINTS SHALL BE PROVIDED IN ANY RAIL BAY SPANNING THE END OF AN INTEGRAL ABUTMENT BRIDGE AND AT ALL SUPERSTRUCTURE EXPANSION JOINTS. EXPANSION JOINT WIDTH SHALL BE 4" @ 68°F AND WILL BE ADJUSTED IN THE FIELD BY THE ENGINEER FOR OTHER TEMPERATURES.
6. HOLES IN RAILS FOR TUBE ATTACHMENT MAY BE FIELD-DRILLED. HOLES SHALL BE COATED WITH AN APPROVED ZINC-RICH PAINT PRIOR TO INSTALLATION.
7. BOLTS SHALL BE TORQUED SNUG TIGHT (APPROXIMATELY 100 FT-LB).
8. SEE STANDARD DRAWING G-1B FOR DETAILS OF DELINEATORS. A DELINEATOR SHALL BE INSTALLED AT 30 FOOT SPACING OR THE NEAREST POST. WHITE IS TO BE INSTALLED ON THE DRIVER'S RIGHT. FOR ONE WAY BRIDGES, YELLOW IS TO BE INSTALLED ON THE DRIVER'S LEFT. PAYMENT SHALL BE INCIDENTAL TO OTHER ITEMS.
9. ANY BENDING OF RAIL SHALL BE DONE AT THE FABRICATION PLANT ACCORDING TO A PROCEDURE PROVIDED BY THE FABRICATOR.
10. THE MINIMUM DISTANCE FROM THE POST TO AN EXPANSION JOINT SHALL BE DETERMINED BY THE MINIMUM EDGE DISTANCE OF 5" FROM ANY ANCHOR STUD TO THE END OF THE SLAB, OR TO THE EXPANSION JOINT RECESS POUR, IF ONE IS USED.
11. THIS RAILING MEETS THE REQUIREMENTS FOR A TL-4 SERVICE LEVEL.

OTHER STDS. REQUIRED: **G-1B, S-364C**

REVISIONS AND CORRECTIONS

AUGUST 9, 2010 - ORIGINAL APPROVAL
APRIL 23, 2012 - GENERAL UPDATE 2012

APPROVED

Wm. Michael Hedges
STRUCTURES PROGRAM MANAGER

Richard Fitzhugh
DIRECTOR OF PROGRAM DEVELOPMENT

Mark D. Richter
FEDERAL HIGHWAY ADMINISTRATION

BRIDGE RAILING, GALVANIZED 3 RAIL BOX BEAM

VERMONT AGENCY OF TRANSPORTATION

STANDARD

S-364A

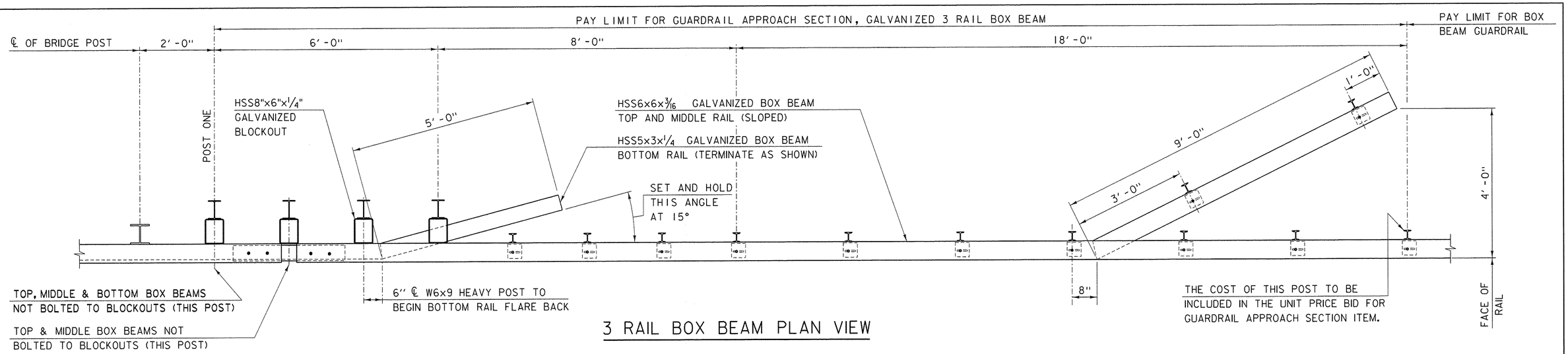

3 RAIL BOX BEAM PLAN VIEW

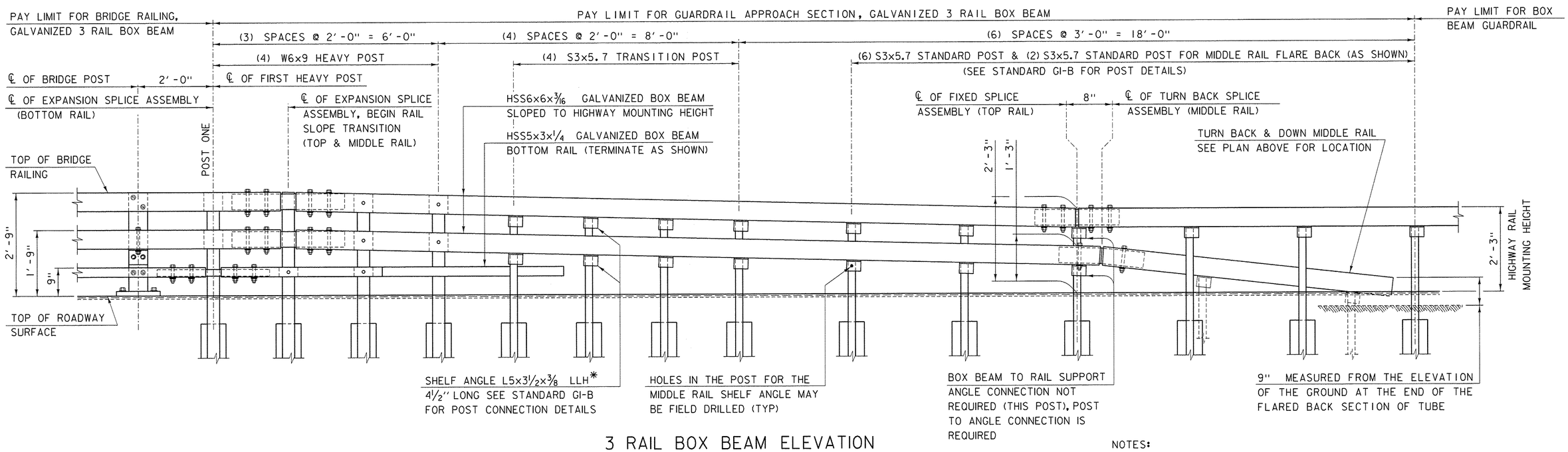

3 RAIL BOX BEAM ELEVATION

*LONG LEG HORIZONTAL

NOTES:

1. BOX BEAM TUBE AND STEEL POST MATERIALS, DIMENSION SIZES AND NOTES SHALL BE THE SAME AS THOSE OF THE BRIDGE RAIL, UNLESS OTHERWISE NOTED.

OTHER STDS. REQUIRED: **G-1B, S-364A**

REVISIONS AND CORRECTIONS

AUGUST 9, 2010 - ORIGINAL APPROVAL
APRIL 23, 2012 - GENERAL UPDATE 2012

APPROVED

STRUCTURES PROGRAM MANAGER

DIRECTOR OF PROGRAM DEVELOPMENT

FEDERAL HIGHWAY ADMINISTRATION

GUARDRAIL APPROACH SECTION, GALVANIZED 3 RAIL BOX BEAM

VERMONT AGENCY OF TRANSPORTATION

STANDARD

S-364B

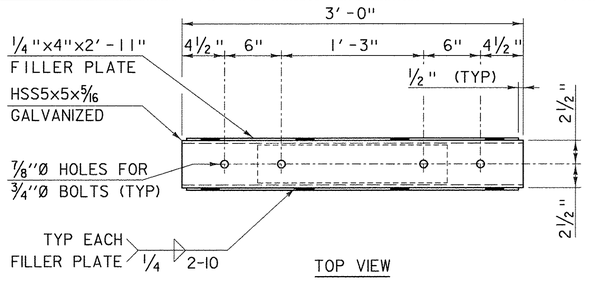

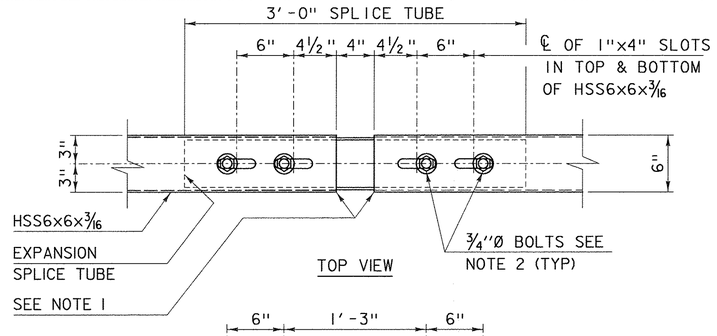

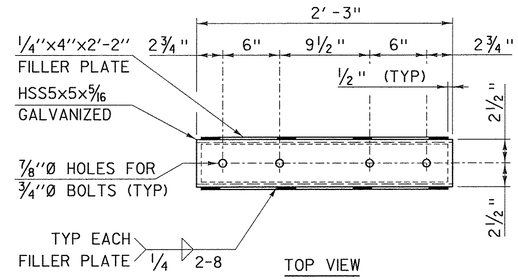

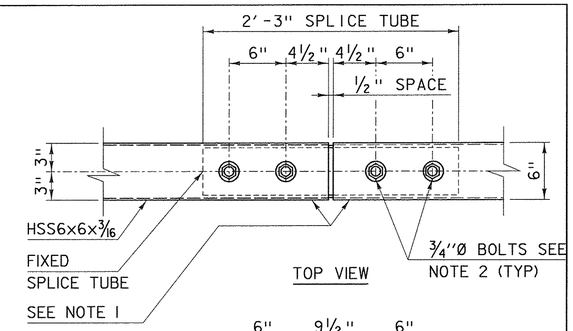

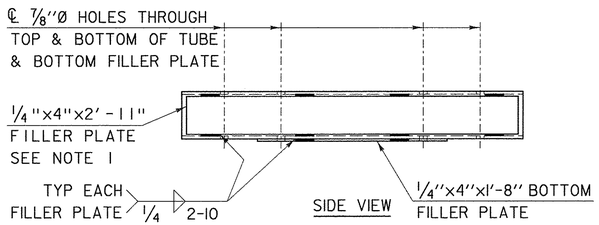

EXPANSION SPLICE TUBE

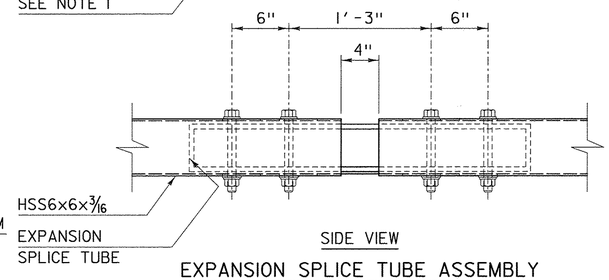

EXPANSION SPLICE TUBE ASSEMBLY

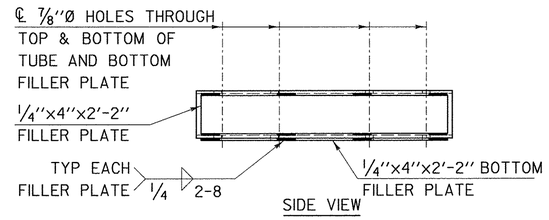

FIXED SPLICE TUBE

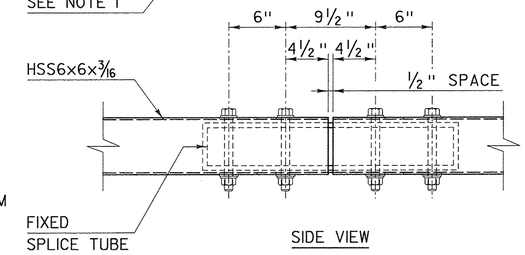

FIXED SPLICE TUBE ASSEMBLY

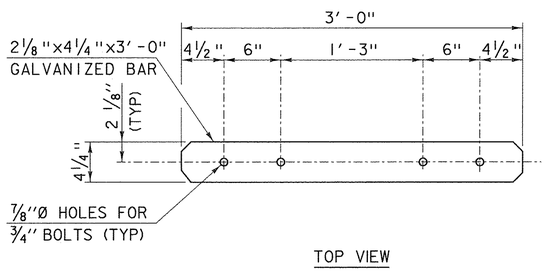

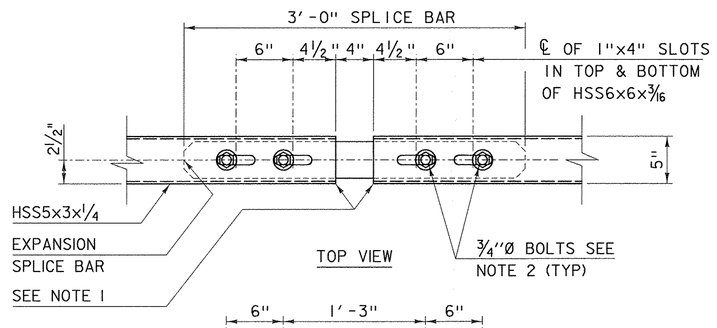

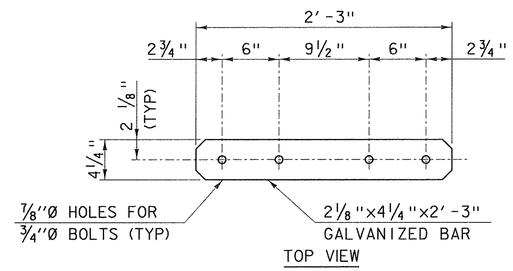

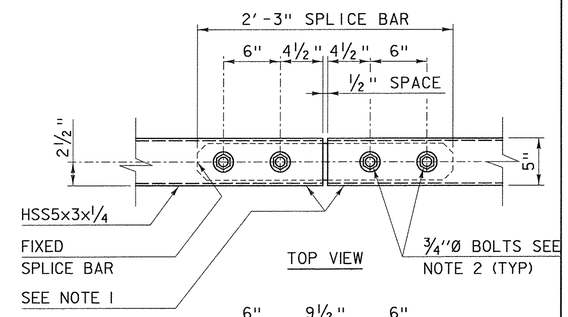

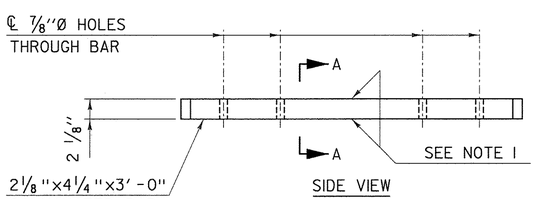

EXPANSION SPLICE BAR

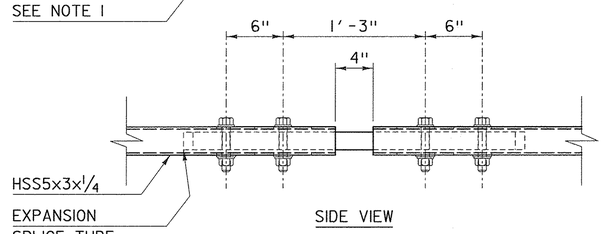

EXPANSION SPLICE BAR ASSEMBLY

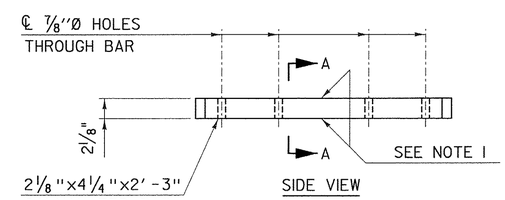

FIXED SPLICE BAR

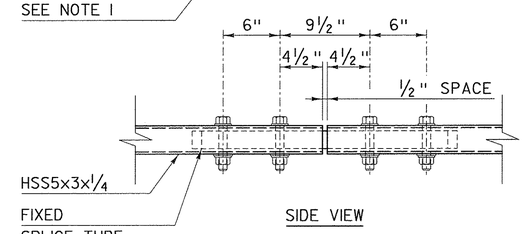

FIXED SPLICE BAR ASSEMBLY

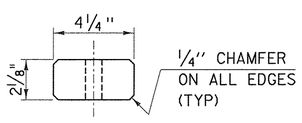

SECTION A-A

NOTES:

1. PROTRUSIONS CAUSED BY WELDING OR GALVANIZING ARE NOT PERMITTED ON THE ADJOINING SURFACES OF THE BOX BEAM RAILS, SPLICE TUBES AND FILL PLATES.
2. FOUR (4) ¾" DIAMETER FULLY THREADED BOLTS, 7½" LONG WITH TWO (2) WASHERS AND A HEAVY HEX NUT ON EACH BOLT. NUT TO BE FINGER TIGHT AND THE FIRST THREAD BELOW THE NUT TO BE BURRED TO PREVENT DISLODGING. FOUR (4) BOLTS AT EACH SPLICE.

OTHER STDS. REQUIRED: •

REVISIONS AND CORRECTIONS

AUGUST 9, 2010 - ORIGINAL APPROVAL
APRIL 23, 2012 - GENERAL UPDATE 2012

APPROVED

Wm. Michael Hedges
STRUCTURES PROGRAM MANAGER

Richard Fontaine
DIRECTOR OF PROGRAM DEVELOPMENT

Mark D. Richter
FEDERAL HIGHWAY ADMINISTRATION

GUARDRAIL APPROACH SECTION, GALVANIZED 3 RAIL BOX BEAM

VERMONT AGENCY OF TRANSPORTATION

STANDARD
S-364C

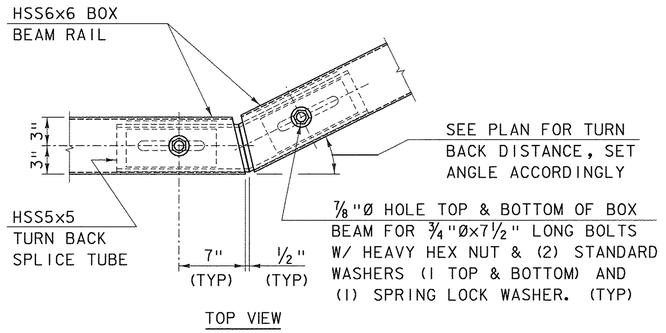

TURN BACK SPLICE TUBE ASSEMBLY

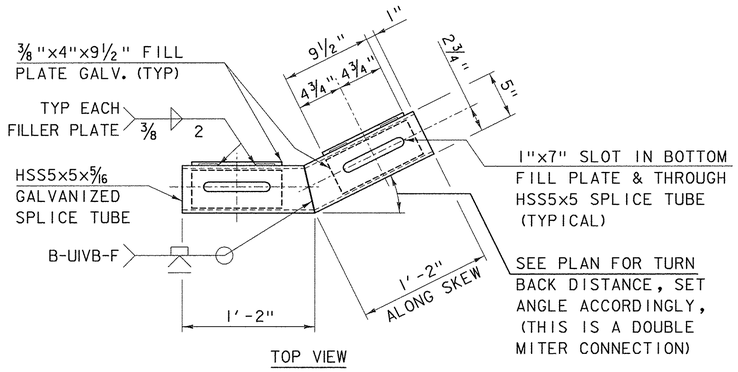

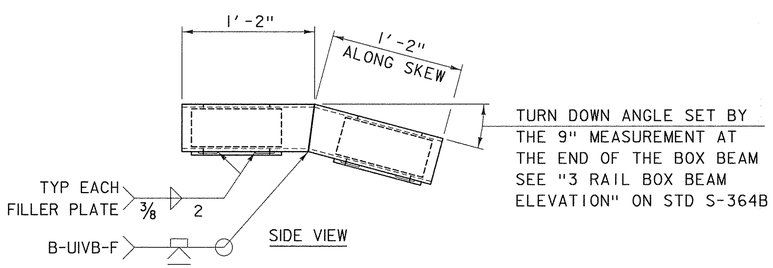

TURN BACK SPLICE TUBE DETAIL

TURN BACK & TURN DOWN TUBE JOINT

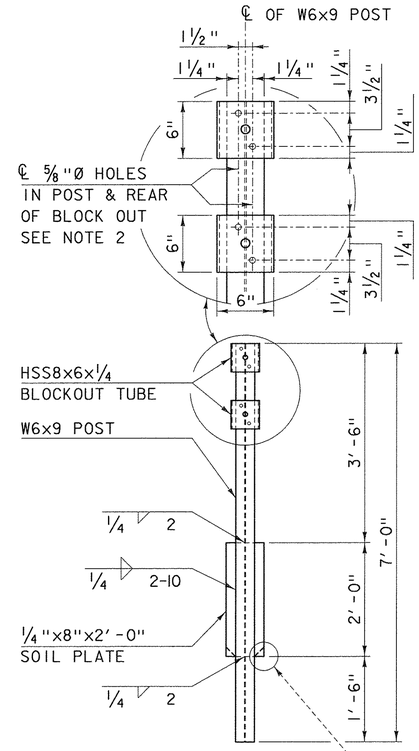

HEAVY POST DETAIL

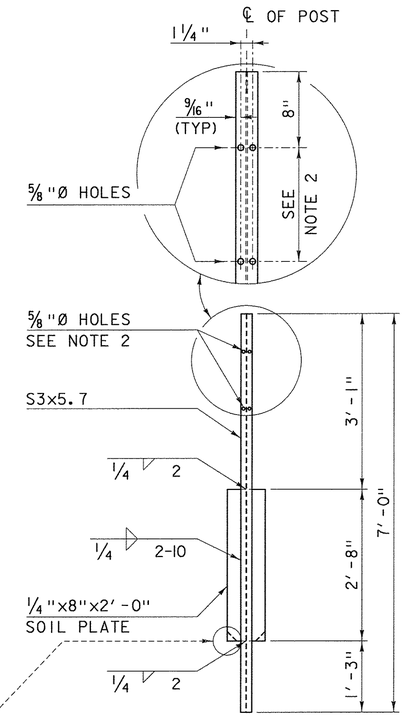

TRANSITION POST DETAIL

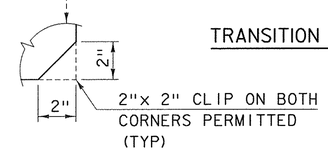

NOTES:

1. PROTRUSIONS CAUSED BY WELDING OR GALVANIZING ARE NOT PERMITTED ON THE ADJOINING SURFACES OF THE BOX BEAM RAILS, SPLICE TUBES AND FILL PLATES.
2. HOLES IN THE POST FOR THE LOWER RAIL MAY BE LOCATED AND DRILLED IN THE FIELD. IF SO, THE GALVANIZING SHALL BE REPAIRED IN ACCORDANCE WITH SPECIFICATION SECTION 525.

OTHER STDS. REQUIRED: •

REVISIONS AND CORRECTIONS

AUGUST 9, 2010 - ORIGINAL APPROVAL
APRIL 23, 2012 - GENERAL UPDATE 2012

APPROVED

Wm. Michael Hedges
STRUCTURES PROGRAM MANAGER

Richard Fetzwatt
DIRECTOR OF PROGRAM DEVELOPMENT

Mark D. Richter
FEDERAL HIGHWAY ADMINISTRATION

GUARDRAIL APPROACH SECTION, GALVANIZED 3 RAIL BOX BEAM

VERMONT AGENCY OF TRANSPORTATION

STANDARD
S-364D

1. TRAFFIC CONTROL DEVICES NOT DETAILED IN THE VERMONT AGENCY OF TRANSPORTATION (VAOT) ''STANDARD DRAWINGS'' OR THE PROJECT PLANS SHALL BE IN ACCORDANCE WITH THE "MANUAL ON TRAFFIC CONTROL DEVICES" (MUTCD) AND THE ''STANDARD HIGHWAY SIGNS AND MARKINGS'' BOOK (SHSM) PUBLISHED BY THE FEDERAL HIGHWAY ADMINISTRATION (FHWA).

2. CONSTRUCTION SIGNS SHALL BE ERECTED BEFORE THE START OF ANY WORK AND SHALL BE COVERED UNTIL WORK COMMENCES, DURING PERIODS OF INACTIVITY OR UPON COMPLETION OF THE WORK. EACH SIGN SHALL BE ERECTED IN A NEAT AND WORKMANLIKE MANNER.

3. CONSTRUCTION SIGN COVERS SHALL CONSIST OF A PANEL, PAINTED FLAT BLACK, THE SAME SIZE AS THE SIGN IT COVERS. THE PANEL SHALL BE OF WOOD, PLYWOOD, HARDBOARD OR ANY MATERIAL SATISFACTORY TO THE ENGINEER. NO MATERIAL WILL BE APPROVED THAT WILL DETERIORATE BY EXPOSURE TO THE WEATHER DURING THE PROJECT. MOUNTING OF THE PANEL SHALL BE DONE IN SUCH A WAY AS NOT TO DAMAGE THE SIGN FACE MATERIAL.

4. SIGNS SHALL BE MAINTAINED IN A CLEAN AND LEGIBLE CONDITION SATISFACTORY TO THE ENGINEER. THEY SHALL BE KEPT PLUMB AND LEVEL, AND ALWAYS PRESENT A NEAT APPEARANCE. DAMAGED, DEFACED OR DIRTY SIGNS SHALL BE REPAIRED, CLEANED OR REPLACED AS ORDERED BY THE ENGINEER.

5. NO CROSS-BRACING OR BACK-BRACING TO KEEP POSTS PLUMB WILL BE ALLOWED. CONCRETE FOUNDATIONS, COLLARS OR SOIL BEARING PLATES ARE NOT PERMITTED. CONSTRUCTION SIGNS SHALL BE PLACED ON TWO POSTS.

6. CONSTRUCTION SIGNS INSTALLED ON POSTS SHALL BE SET SECURELY IN THE GROUND. THE BOTTOM OF A SIGN SHALL BE AT LEAST FIVE FEET ABOVE THE EDGE OF PAVEMENT AND THE NEAREST EDGE OF A SIGN SHALL BE AT LEAST SIX FEET OUTSIDE THE SHOULDER POINT, FOUR FEET OUTSIDE GUARDRAIL, OR TWO FEET OUTSIDE CURBING OR SIDEWALK. THE INSTALLATION OF SIGNS SHALL BE SUBJECT TO APPROVAL OF THE ENGINEER. IN URBAN AREAS, THE BOTTOM OF THE SIGN SHALL BE AT LEAST SEVEN FEET ABOVE THE SIDEWALK OR EDGE OF PAVEMENT, WHICHEVER IS HIGHER.

7. PORTABLE SIGNS SHALL BE PLACED ON THE EDGE OF ROADWAY AND A MINIMUM OF ONE FOOT ABOVE THE TRAVELED WAY. ALL VEGETATION THAT INTERFERES WITH VISIBILITY OF THE SIGNS SHALL BE REMOVED. WHEN PLACED BEHIND GUARDRAIL, THE BOTTOM OF THE SIGN FACE SHALL BE ABOVE THE TOP OF THE GUARDRAIL.

8. SIGNS SHALL BE REMOVED UPON COMPLETION OF THE WORK AT THE DISCRETION OF THE ENGINEER.

9. ROLL UP CONSTRUCTION SIGNS SHALL HAVE RETROREFLECTIVE SHEETING EQUAL TO OR EXCEEDING THE "AMERICAN ASSOCIATION OF STATE HIGHWAY AND TRANSPORTATION OFFICIALS" (AASHTO) M 268 ["AMERICAN SOCIETY FOR TESTING AND MATERIALS" (ASTM) D 4956] TYPE VI AND TYPE VII UNLESS OTHERWISE NOTED.

10. SOLID SUBSTRATE CONSTRUCTION SIGNS SHALL HAVE RETROREFLECTIVE SHEETING EQUAL TO OR EXCEEDING THE "AMERICAN ASSOCIATION OF STATE HIGHWAY AND TRANSPORTATION OFFICIALS" (AASHTO) M 268 ["AMERICAN SOCIETY FOR TESTING AND MATERIALS" (ASTM) D 4956] TYPE VIII OR IX REQUIREMENTS UNLESS OTHERWISE NOTED.

11. WHERE CONSTRUCTION SIGN INSTALLATIONS ARE NOT PROTECTED BY GUARDRAIL OR OTHER APPROVED TRAFFIC BARRIERS, ALL SIGN STANDS AND POST INSTALLATIONS SHALL MEET "NATIONAL COOPERATIVE HIGHWAY RESEARCH PROGRAM" (NCHRP) REPORT 350 OR THE AASHTO "MANUAL FOR ASSESSING SAFETY HARDWARE" (MASH). THE APPROPRIATE RESOURCE SHALL BE DETERMINED AS DESCRIBED IN THE MASH PUBLICATION. NO SIGN POSTS SHALL EXTEND OVER THE TOP OF THE SIGN INSTALLED ON SAID POSTS. WHEN ANCHORS ARE INSTALLED, STUBS SHALL NOT BE GREATER THAN FOUR INCHES ABOVE EXISTING GROUND.

12. ROADWAY AND SHOULDER WIDTHS DEPICTED ON THE STANDARD DRAWINGS MAY VARY.

13. THESE STANDARD DRAWINGS ARE INTENDED TO SERVE AS VTRANS STANDARD OPERATING PROCEDURE. IT IS NOTED THAT COMPONENT PARTS OF A TEMPORARY TRAFFIC CONTROL WORK ZONE MAY BE MODIFIED DUE TO FIELD CONDITIONS, AT THE DISCRETION OF THE ENGINEER.

OTHER STDS. REQUIRED: **NONE**

REVISIONS AND CORRECTIONS

AUG. 6, 2012 - ORIGINAL APPROVAL DATE

APPROVED

HIGHWAY SAFETY & DESIGN ENGINEER

DIRECTOR OF PROGRAM DEVELOPMENT

Mark D. Richter

FEDERAL HIGHWAY ADMINISTRATION

TRAFFIC CONTROL GENERAL NOTES

VERMONT AGENCY OF TRANSPORTATION

STANDARD

T-1

LEGEND

(A) ROAD WORK AHEAD — W20-1

(B) ROAD WORK 500 FT — W20-1

(C) SIDE ROAD WORK AHEAD — VC-869

(D) SIDE ROAD WORK 500 FT — VC-869

(E) SIDE ROAD WORK LEFT — VC-869

(F) SIDE ROAD WORK RIGHT — VC-869

(G) ROAD WORK NEXT XX MILES — G20-1

(H) END ROAD WORK — G20-2

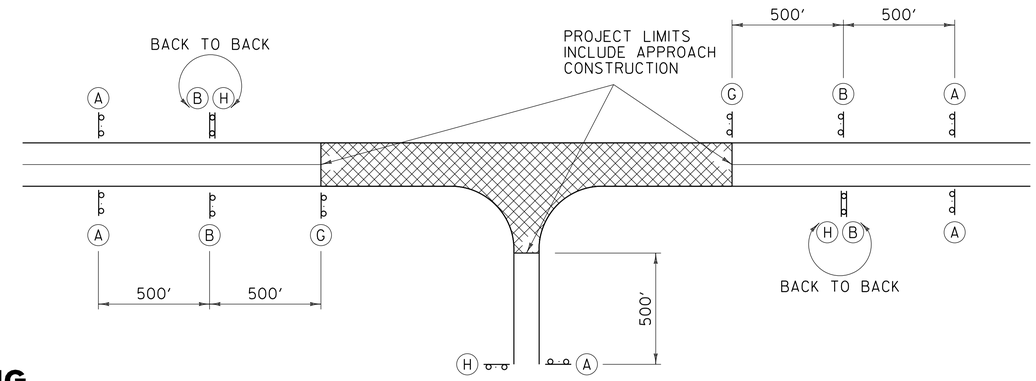

TYPICAL APPROACH SIGNING

FIELD CONDITIONS MAY DICTATE THE ACTUAL PLACEMENT.

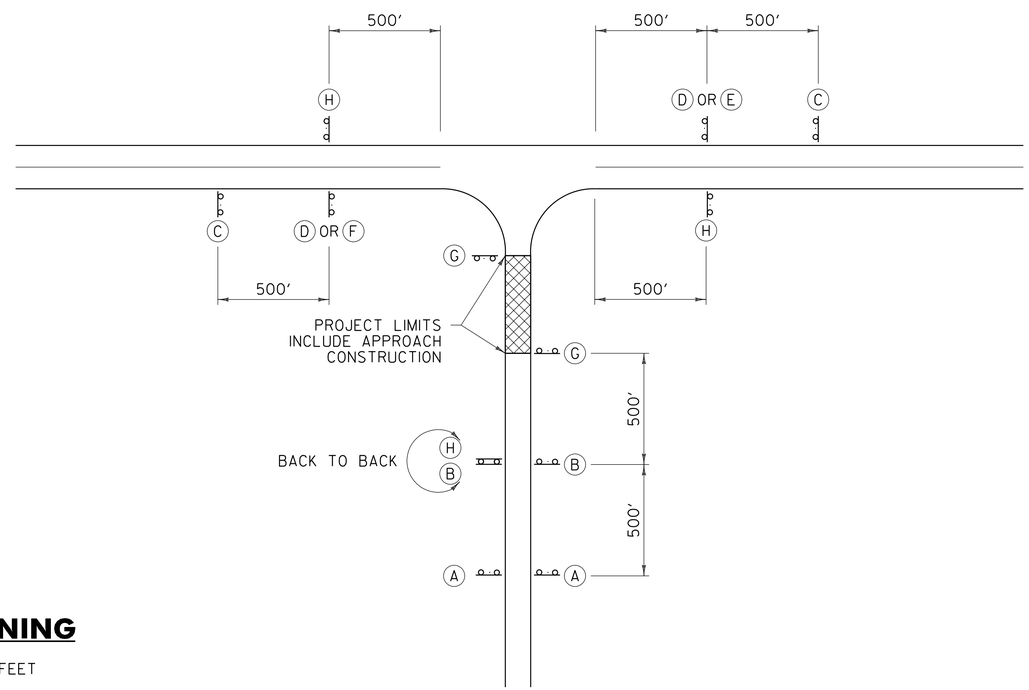

SIDE ROAD APPROACH SIGNING

TO BE USED WHEN CONSTRUCTION IS UP TO 1000 FEET FROM THE INTERSECTION. FIELD CONDITIONS MAY DICTATE THE ACTUAL PLACEMENT.

GENERAL NOTES:

1. SIGNS SHOWN ON THIS SHEET ARE INTENDED FOR USE IN PROVIDING ADVANCE WARNING AND INFORMATION ON CONSTRUCTION PROJECTS OVER WHICH TRAFFIC WILL BE MAINTAINED. WHEN ADDITIONAL APPROACH SIGNS OR OTHER TYPES OF ADVANCE SIGNING OR CONTROL ARE NECESSARY, THE PLANS AND/OR THE SPECIFICATIONS FOR THAT PROJECT WILL GIVE THE DETAILS OF THE SIGNS AND DEVICES REQUIRED. FOR ON-PROJECT CONSTRUCTION SIGNS, REFER TO APPROPRIATE STANDARD SHEETS.
2. THE "ROAD WORK NEXT XX MILES" SIGN (G20-1) SHALL BE INSTALLED IN ADVANCE OF TEMPORARY TRAFFIC CONTROL ZONES THAT ARE MORE THAN TWO MILES IN LENGTH OR AS DIRECTED BY THE ENGINEER. DISTANCES SHALL BE STATED TO THE NEAREST WHOLE MILE.
3. SIGNS SHALL BE LOCATED AS DETAILED ON THIS SHEET OR AS OTHERWISE SHOWN ON THE PLANS. THEY SHALL APPEAR AT EACH END OF THE HIGHWAY UNDER CONSTRUCTION AND ON ALL INTERSECTING PUBLIC HIGHWAYS. THE ENGINEER SHALL DETERMINE THE EXACT LOCATIONS.

OTHER STDS. REQUIRED: **T–1, T–28**

REVISIONS AND CORRECTIONS

AUG. 6, 2012 - ORIGINAL APPROVAL DATE

APPROVED

HIGHWAY SAFETY & DESIGN ENGINEER

DIRECTOR OF PROGRAM DEVELOPMENT

Mark D. Richter

FEDERAL HIGHWAY ADMINISTRATION

CONVENTIONAL ROADS CONSTRUCTION APPROACH SIGNING

VERMONT AGENCY OF TRANSPORTATION

STANDARD

T-10

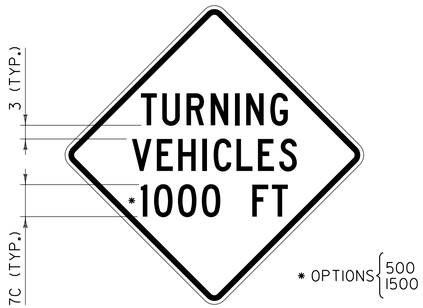

VC–001

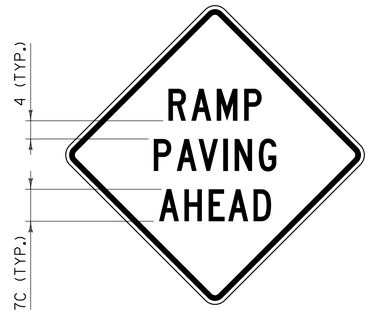

VC–003

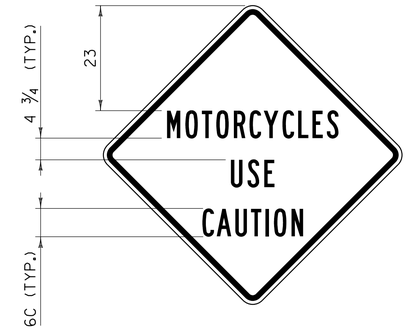

VC–004

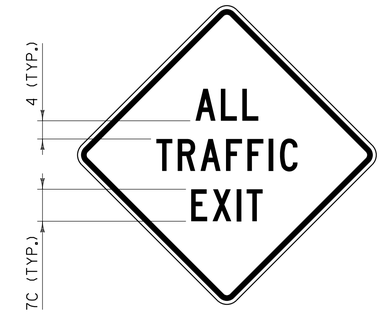

VC–008

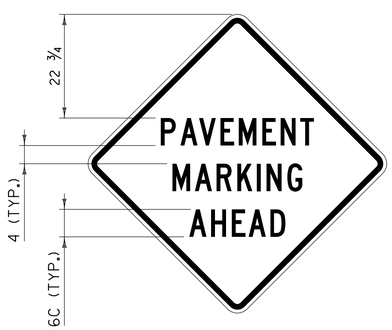

VC–813

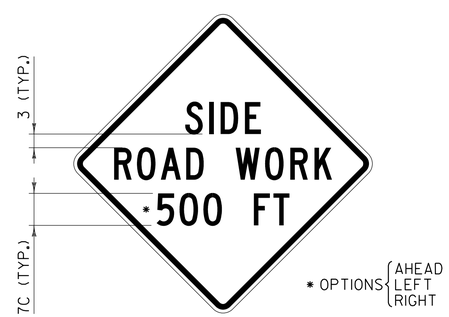

VC–869

VC–874

GENERAL NOTES:

1. COLORS FOR SIGNS SHALL BE BLACK LEGEND AND BORDER ON FLUORESCENT ORANGE BACKGROUND.
2. CONSTRUCTION SIGNS SHALL BE 48 INCH BY 48 INCH. IF SOLID SUBSTRATE SIGNS ARE USED, SIGNS SHALL HAVE CORNERS ROUNDED TO A THREE INCH RADIUS.
3. SIGNS SHALL HAVE 1 1/4 INCH WIDE BORDERS THAT ARE INDENTED 3/4 INCH FROM THE EDGE OF THE SIGN.
4. SIGNS SHALL HAVE THE LEGEND CENTERED HORIZONTALLY AND VERTICALLY ON THE SIGN UNLESS OTHERWISE INDICATED.
5. ALL DIMENSIONS SHOWN IN INCHES.

OTHER STDS. REQUIRED: **T–1**

REVISIONS AND CORRECTIONS

AUG. 6, 2012 - ORIGINAL APPROVAL DATE

APPROVED

HIGHWAY SAFETY & DESIGN ENGINEER

DIRECTOR OF PROGRAM DEVELOPMENT

Mark D. Richter

FEDERAL HIGHWAY ADMINISTRATION

CONSTRUCTION SIGN DETAILS

VERMONT AGENCY OF TRANSPORTATION

STANDARD

T - 28

DROP-OFF ADJACENT TO TRAVELED WAY

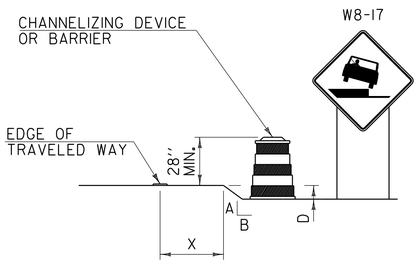

TYPE 1

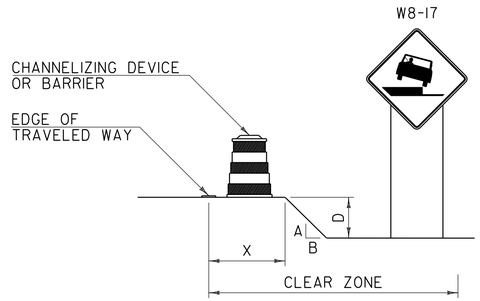

TYPE 2

NOTES:

1. CHANNELIZING DEVICES OR BARRIER SHOULD BE PLACED TO MAXIMIZE THE WIDTH OF THE TRAVELED WAY.
2. SEE CHART "A" FOR SPECIFIC REQUIREMENTS.
3. IF THE DROP-OFF REQUIRES CHANNELIZING DEVICES TO REMAIN IN PLACE OVERNIGHT, THEN "SHOULDER DROP-OFF SYMBOL" (W8-17) SIGNS SHOULD BE INSTALLED.

DROP-OFF BETWEEN ADJACENT TRAVELED LANES

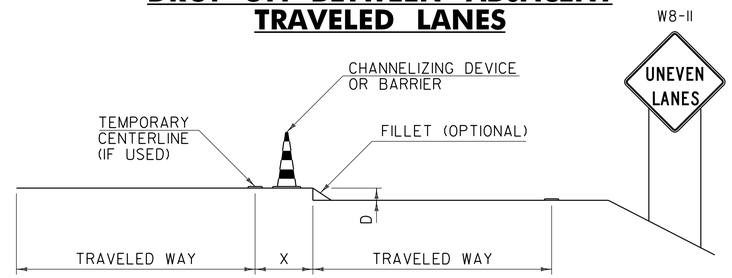

NOTES:

1. WHENEVER A LONGITUDINAL DROP-OFF BETWEEN ADJACENT TRAVELED LANES IS TO BE LEFT OVERNIGHT, THEN "UNEVEN LANES" (W8-11) SIGNS AND CHANNELIZING DEVICES SHOULD BE INSTALLED.
2. IF REQUIRED, THE CHANNELIZING DEVICES USED SHOULD BE THOSE WHICH MAXIMIZE THE WIDTH OF THE TRAVELED LANE (I.E. CONES, VERTICAL PANELS OR TUBULAR MARKERS).
3. A BITUMINOUS CONCRETE FILLET WITH A 1.5:1 SLOPE MAY BE USED IN PLACE OF CHANNELIZING DEVICES, HOWEVER THE "UNEVEN LANES" (W8-11) SIGNS SHOULD STILL BE INSTALLED.
4. SEE CHART "A" FOR SPECIFIC REQUIREMENTS.

DROP-OFF BEYOND SHOULDER OR CURB

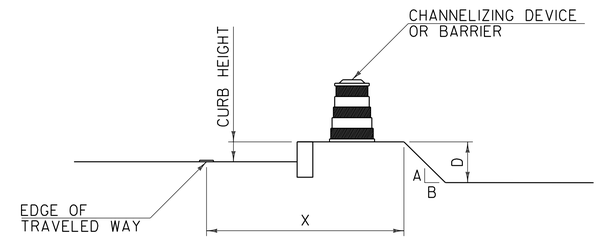

NOTES:

1. USE CHART "A" FOR VERTICAL CURBS UNDER SIX INCHES, MOUNTABLE CURBS OR ROADWAYS WITH A POSTED SPEED ABOVE 40 MPH.
2. USE CHART "B" FOR VERTICAL CURBS SIX INCHES OR GREATER.

CHART "A"
ALL SPEEDS WITH NO CURB OR MOUNTABLE CURB

X (FEET)	DROP (D) (INCHES)	A:B SLOPE	RECOMMENDED DEVICE
0 TO 4'	LESS THAN 2"	ANY	NONE
	2" TO 6"	1:1.5 OR FLATTER	NONE
		STEEPER THAN 1:1.5	CHANNELIZING DEVICE
	GREATER THAN 6"	1:3 OR FLATTER	NONE
		STEEPER THAN 1:3	BARRIER
4' TO 10'	LESS THAN 6"	ANY	NONE
	6" TO 12"	1:3 OR FLATTER	NONE
		STEEPER THAN 1:3	BARRIER
	GREATER THAN 12"	1:3 OR FLATTER	NONE
		STEEPER THAN 1:3	BARRIER
10' TO CZ	LESS THAN OR EQUAL TO 12"	ANY	NONE
	GREATER THAN 12"	1:3 OR FLATTER	NONE
		STEEPER THAN 1:3	BARRIER

NOTES:

1. THE MINIMUM CLEAR ZONE FOR FREEWAYS IS TO BE DETERMINED PER THE CURRENT AASHTO ROADSIDE DESIGN GUIDE. ALL OTHER HIGHWAYS WILL BE DETERMINED PER THE CURRENT "VERMONT STATE STANDARDS" BOOK.
2. CHANNELIZING DEVICES MAY BE USED INSTEAD OF BARRIER FOR SHORT TERM OPERATIONS.
3. ON BORDERLINE CONDITIONS, THE ENGINEER SHOULD DETERMINE WHICH TREATMENT IS ADEQUATE FOR THE EXISTING CONDITIONS.

CHART "B"
40 MPH OR LESS WITH VERTICAL CURB

X (FEET)	DROP (D) (INCHES)	DEVICE REQUIRED
0-10'	LESS THAN OR EQUAL TO 12"	NONE
0-10'	GREATER THAN 12"	CHANNELIZING DEVICE
GREATER THAN 10'	ANY	NONE

GENERAL NOTES:

1. THESE CONDITIONS AND TREATMENTS ARE ONLY PART OF THE TRAFFIC CONTROL SYSTEM AND SHOULD BE USED IN ADDITION TO THE PROPER WORK ZONE SIGNING.
2. THE FOLLOWING ARE "MANUAL ON UNIFORM TRAFFIC CONTROL DEVICES" (MUTCD) COMPLIANT CHANNELIZING DEVICES:

   A. VERTICAL PANEL
   B. TYPE I OR TYPE II BARRICADE
   C. PLASTIC DRUM
   D. CONE - WHERE APPLICABLE
   E. TUBULAR MARKERS

   IF CHANNELIZING DEVICES ARE REQUIRED TO STAY IN PLACE DURING NIGHTTIME HOURS, THEY SHALL BE STABILIZED WHILE UNATTENDED IN ACCORDANCE WITH THE MUTCD.
3. WHERE BARRIER IS NECESSARY, THE BARRIER SHALL BE TAPERED BEYOND THE CLEAR ZONE. WHEN THE BARRIER CANNOT BE TAPERED BEYOND THE CLEAR ZONE, A MUTCD COMPLIANT END TREATMENT SHALL BE USED. BARRIER AND END TREATMENT SHALL MEET "NATIONAL COOPERATIVE HIGHWAY RESEARCH PROGRAM" (NCHRP) REPORT 350 OR THE "AMERICAN ASSOCIATION OF STATE HIGHWAY AND TRANSPORTATION OFFICIALS" (AASHTO) "MANUAL FOR ASSESSING SAFETY HARDWARE" (MASH). THE APPROPRIATE RESOURCE SHALL BE DETERMINED AS DESCRIBED IN THE MASH PUBLICATION.
4. CHANNELIZING DEVICE SPACING ALONG A LONGITUDINAL DROP-OFF (TANGENT) SHALL BE AS FOLLOWS:

   TANGENT - CHANNELIZING DEVICES SHALL BE SPACED "2S" ("S" IS EQUAL TO THE POSTED SPEED LIMIT IN FEET) APART.
5. "LOW SHOULDER" (W8-9) AND "SHOULDER DROP-OFF SYMBOL" (W8-17) SIGNS, WHEN USED, SHOULD BEGIN PRIOR TO THE DROP-OFF CONDITION AND SHOULD BE REPEATED EVERY 1500 FEET.

OTHER STDS. REQUIRED: **T-1**

REVISIONS AND CORRECTIONS

AUG. 6, 2012 - ORIGINAL APPROVAL DATE

APPROVED

HIGHWAY SAFETY & DESIGN ENGINEER

DIRECTOR OF PROGRAM DEVELOPMENT

Mark D. Richter

FEDERAL HIGHWAY ADMINISTRATION

CONSTRUCTION ZONE LONGITUDINAL DROP-OFFS

VERMONT AGENCY OF TRANSPORTATION

STANDARD

T-35

POST AND ANCHOR SELECTION CHART

POST SIZE (IN.)	POST THICKNESS (IN.)	POST WEIGHT (LBS/FT.)	POST GAGE	SECTION MODULUS ($IN.^3$)	ONE POST SV	TWO POST SV	THREE POST SV	POSTS PERMITTED IN 8' PATH	ANCHOR SIZE (IN.)	ANCHOR GAGE	MINIMUM ANCHOR LENGTH
1.75	.083	1.88	14	0.222	45	90	135	TWO	2.00	12	30
2.00	.109	2.42	12	0.393	80	160	240	TWO	2.25	12	48
2.50	.109	3.35	12	0.673	137	274	411	ONE	3.00	7	48

NOTES:

1. ALL SIGN POSTS SHALL HAVE 7/16 INCH HOLES EVERY ONE INCH ON CENTER (ALL FOUR SIDES).
2. THE NUMBER OF SIGN POSTS PERMITTED WITHIN AN EIGHT FOOT PATH ASSUMES THAT THE SIGN ASSEMBLY IS NOT PROTECTED BY GUARDRAIL OR IS LOCATED WITHIN A GUARDRAIL'S DEFLECTION DISTANCE DETERMINED PER THE CURRENT "AMERICAN ASSOCIATION OF STATE HIGHWAY AND TRANSPORTATION OFFICIALS" (AASHTO) ROADSIDE DESIGN GUIDE. ADDITIONAL POSTS MAY BE INSTALLED USING SLIP BASES THAT MEET "NATIONAL COOPERATIVE HIGHWAY RESEARCH PROGRAM" (NCHRP) REPORT 350 OR THE AASHTO "MANUAL FOR ASSESSING SAFETY HARDWARE" (MASH). THE APPROPRIATE RESOURCE SHALL BE DETERMINED AS DESCRIBED IN THE MASH PUBLICATION.
3. TO USE THE SELECTION VALUE (SV) COLUMNS IN THE TABLE ABOVE, MULTIPLY A SIGN'S SURFACE AREA IN SQUARE FEET (H x L) BY THE SIGN'S HEIGHT IN FEET MEASURED FROM THE GROUND TO THE CENTROID OF THE SIGN ASSEMBLY (h). THIS RESULT MUST BE LESS THAN OR EQUAL TO THE CORRESPONDING SELECTION VALUE. NOTE THAT FOR SIGNS WITH MULTIPLE POSTS, THE LARGEST HEIGHT DIMENSION SHALL BE USED TO CALCULATE THE POST SELECTION VALUE.
4. THE DESIGN CRITERIA UTILIZED IN SIGN POST AND ANCHOR SELECTION IS AS FOLLOWS: WIND SPEED OF 70 MPH (10 YEAR MEAN RECURRENCE INTERVAL), WIND PRESSURE OF 19 PSF, STEEL MINIMUM YIELD OF 55,000 PSI, AND AN ALLOWABLE STRESS OF 1.4 (0.60 FY).

CORNER BOLT INSTALLATION DETAIL

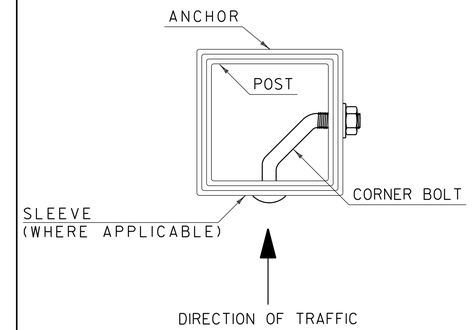

NOTES:

1. CORNER BOLTS SHALL BE 5/16 INCH DIAMETER WITH 18 THREADS PER INCH AND DIMENSIONS SHALL BE DETERMINED BASED ON THE OUTERMOST DIMENSION OF THE SLEEVE, ANCHOR OR POST. THREAD EXPOSURE MUST EXCEED THE CORRESPONDING NUT WIDTH. THE CORNER BOLT AND CORRESPONDING HARDWARE SHALL BE ZINC PLATED, MEETING OR EXCEEDING THE REQUIREMENTS OF THE "AMERICAN SOCIETY FOR TESTING AND MATERIALS" (ASTM) A307.

SLEEVE /ANCHOR INSTALLATION DETAIL

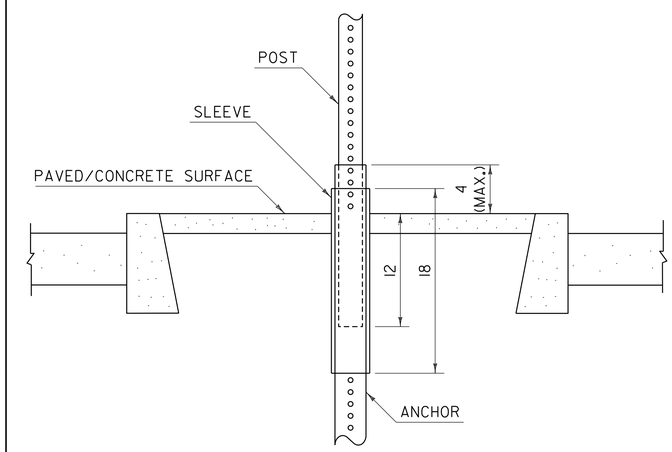

NOTES:

1. A SLEEVE SHALL BE INSTALLED FOR SIGN INSTALLATIONS IN CONCRETE OR PAVEMENT.
2. THE SLEEVE SHALL BE 18 INCHES MINIMUM IN LENGTH.
3. THREE INCH SLEEVES THAT DO NOT HAVE HOLES WILL REQUIRE THAT 7/16 INCH HOLES ARE DRILLED TO FACILITATE CONNECTIONS.
4. REFER TO CURRENT EDITION OF THE "VERMONT AGENCY OF TRANSPORTATION STANDARD SPECIFICATIONS FOR CONSTRUCTION" FOR MATERIAL REQUIREMENTS.

POST SPACING DETAILS

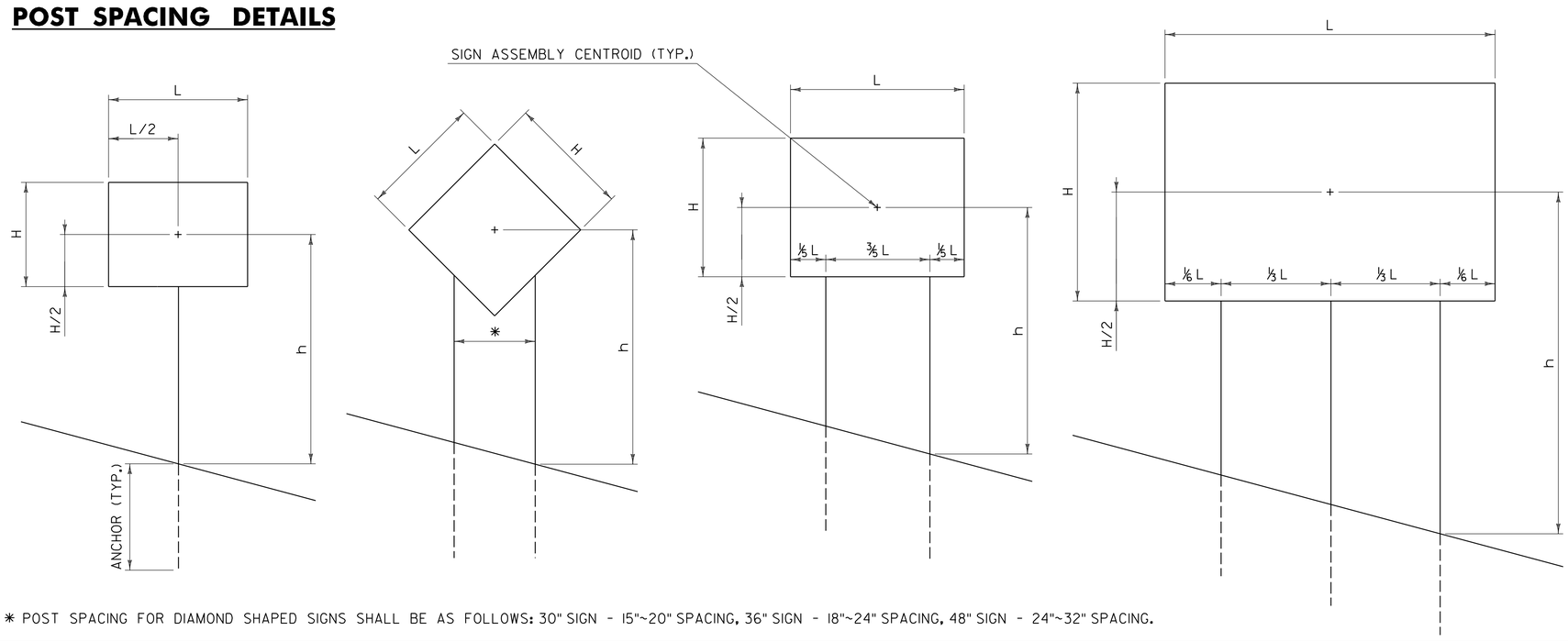

* POST SPACING FOR DIAMOND SHAPED SIGNS SHALL BE AS FOLLOWS: 30" SIGN - 15"~20" SPACING, 36" SIGN - 18"~24" SPACING, 48" SIGN - 24"~32" SPACING.

GENERAL NOTES:

1. ALL SQUARE TUBE STEEL POSTS AND ANCHORS SHALL BE FORMED INTO A SIZE AND SHAPE IN SUCH A MANNER THAT NEITHER FLASH NOR WELD SHALL INTERFERE WITH THE TELESCOPING PROPERTIES, NOR DAMAGE THE GALVANIZING.
2. ANCHORS MAY BE DRIVEN OR SET INTO A DUG HOLE AND BACKFILLED. IF DRIVEN, A DRIVING CAP SHALL BE USED. THE DUG HOLE INSTALLATION METHOD SHALL BE UTILIZED IN AREAS WITH POOR SOIL CONDITIONS OR AS DIRECTED BY THE ENGINEER. BACKFILL SHALL BE COMPACTED AS DIRECTED BY THE ENGINEER.
3. THE TOPS OF SIGN POSTS SHALL BE AT OR NEAR THE TOP OF SIGN. THE POST SHALL NOT EXTEND ABOVE THE TOP OF SIGN.
4. SIGN POSTS SHALL BE INSTALLED A MINIMUM OF ONE FOOT BELOW GROUND, INSIDE THE ANCHOR. THE LENGTH OF ANCHOR EXPOSED ABOVE GROUND SHALL NOT EXCEED FOUR INCHES.
5. ALL DIMENSIONS SHOWN IN INCHES.

OTHER STDS. REQUIRED: **NONE**

REVISIONS AND CORRECTIONS

JAN. 2, 2013 - ORIGINAL APPROVAL DATE

APPROVED

HIGHWAY SAFETY & DESIGN ENGINEER

DIRECTOR OF PROGRAM DEVELOPMENT

Mark D. Richter

FEDERAL HIGHWAY ADMINISTRATION

SQUARE TUBE SIGN POST AND ANCHOR

VERMONT AGENCY OF TRANSPORTATION

STANDARD

T-45