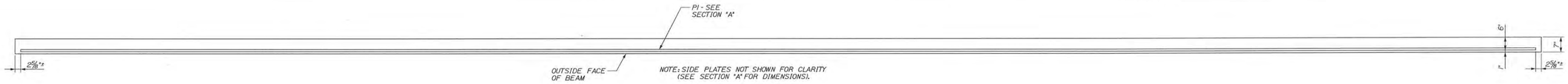

TOP VIEW

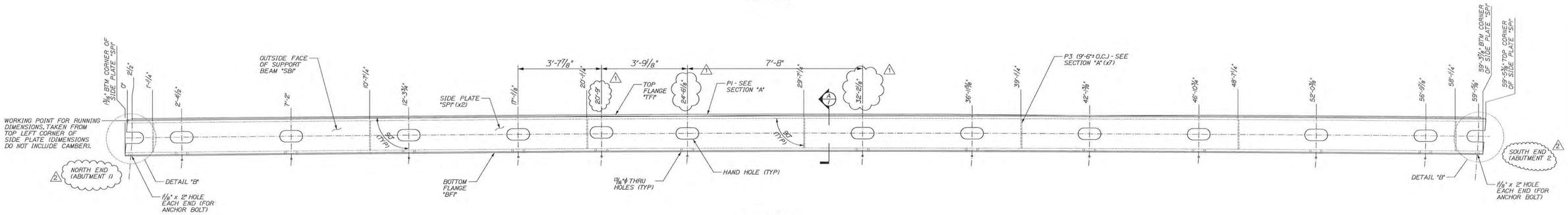

ELEVATION VIEW

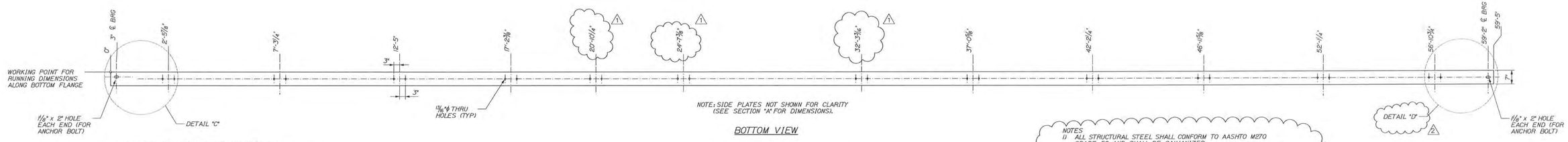

BOTTOM VIEW

SUPPORT BEAM "SB1" DIMENSIONAL PLANS ELEVATION
SCALE: 1/2" = 1'-0"

NOTES
1) ALL STRUCTURAL STEEL SHALL CONFORM TO AASHTO M270 GRADE 50 AND SHALL BE GALVANIZED.
2) ALL MEMBERS MARKED (CVN) MUST MEET THE CHARPY V-NOTCH TESTING REQUIREMENTS. (SEE BILL OF MATERIALS FOR DESIGNATION).

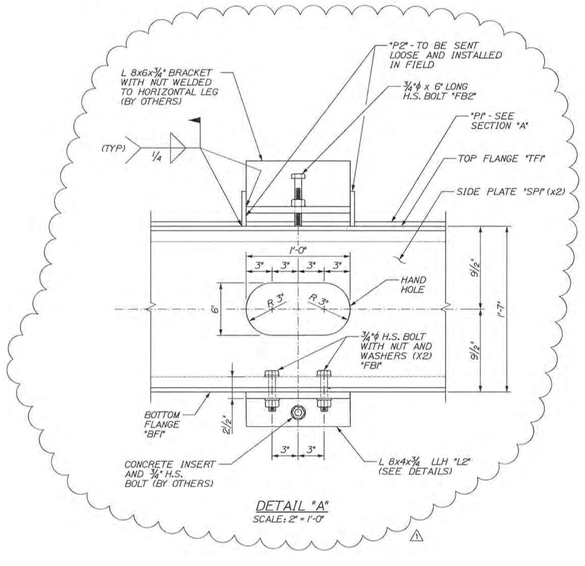

DETAIL "A"
SCALE: 2" = 1'-0"

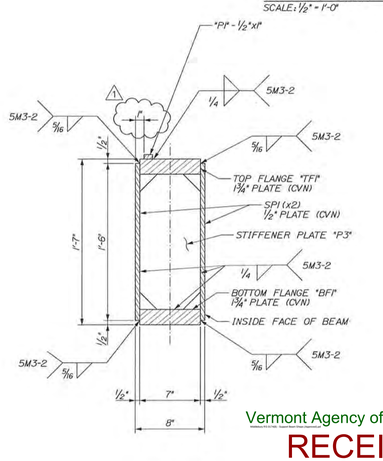

SECTION "A"
SCALE: 1 1/2" = 1'-0"

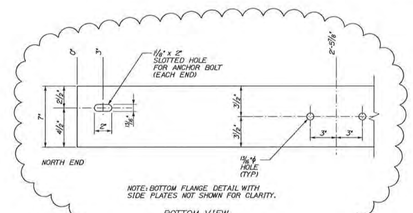

BOTTOM VIEW

DETAIL "C"
SCALE: 1 1/2" = 1'-0"

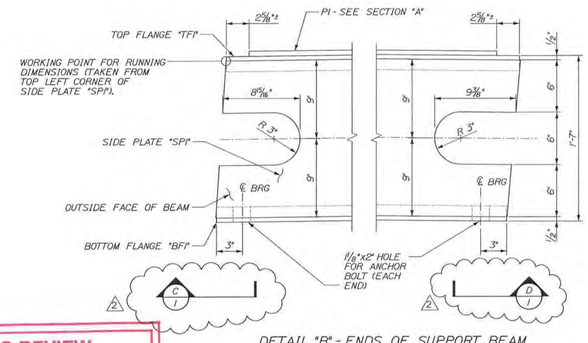

DETAIL "B" - ENDS OF SUPPORT BEAM
SCALE: 2" = 1'-0"

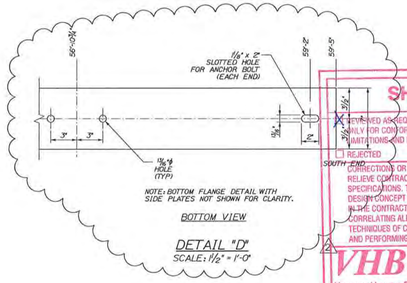

BOTTOM VIEW

DETAIL "D"
SCALE: 1 1/2" = 1'-0"

Vermont Agency of Transportation
RECEIVED
ON: March 26, 2014
and Checked for
CONFORMANCE
BY: Jennifer Fitch DATE: 03/28/2014

SHOP DRAWING REVIEW

X REVIEWED AS REQUIRED BY THE CONSTRUCTION CONTRACT DOCUMENTS AND APPROVED, BUT ONLY FOR CONFORMANCE TO THE DESIGN CONCEPT OF THE WORK, AND SUBJECT TO FURTHER LIMITATIONS AND REQUIREMENTS CONTAINED IN THE CONSTRUCTION CONTRACT DOCUMENTS.

☐ REJECTED ☐ REVISE AND RESUBMIT ☐ FURNISH AS CORRECTED

CORRECTIONS OR COMMENTS MADE ON THE SHOP DRAWINGS DURING THIS REVIEW DO NOT RELIEVE CONTRACTOR FROM COMPLIANCE WITH REQUIREMENTS OF THE DRAWINGS AND SPECIFICATIONS. THIS CHECK IS ONLY FOR REVIEW OF GENERAL CONFORMANCE WITH THE DESIGN CONCEPT OF THE PROJECT AND GENERAL COMPLIANCE WITH THE INFORMATION GIVEN IN THE CONTRACT DOCUMENTS. THE CONTRACTOR IS RESPONSIBLE FOR: CONFIRMING AND CORRELATING ALL QUANTITIES AND DIMENSIONS; SELECTING FABRICATION PROCESSES AND TECHNIQUES OF CONSTRUCTION; COORDINATING HIS WORK WITH THAT OF ALL OTHER TRADES; AND PERFORMING HIS WORK IN A SAFE AND SATISFACTORY MANNER.

VHB Vanasse Hangen Brustlin, Inc.
Job Number: 57438.00
Reviewed By: K Moore
Date: 3-27-14

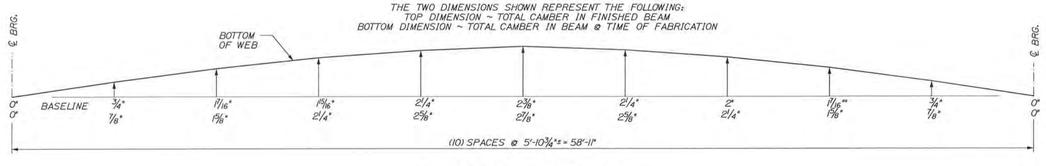

SUPPORT BEAM "SB1" CAMBER
NTS

Bill Of Materials

Ship	Ship Mark	No. PCS	Piece Mark	Description	Length	Remarks	Material
1	SB1			Support Beam			
		1	TF1	Top Flange 1 3/4"x7" (CVN)	59'-5 1/4"		AASHTO M270, Grade 50
		1	BF1	Bottom Flange 1 3/4"x7" (CVN)	59'-5"		AASHTO M270, Grade 50
		2	SP1	Side Plate 1/2"x1'-6" (CVN)	59'-6 9/16"		AASHTO M270, Grade 50
		1	P1	1" Wide x 1/2" Thick	59'-0"		AASHTO M270, Grade 50
		7	P3	7" Wide x 3/8" Thick Stiffener Plate	1'-3 1/2"		AASHTO M270, Grade 50

FINISH					
MATERIAL	SEE BILL OF MATERIALS				
HOLES	SEE PLANS				
ELECTRODES	PER WELD PROCEDURE				
WELDS	PER WELD PROCEDURE	2	MAR 2014	Hole at north end of SB1	DLM
SURFACE PREP SSPC SP10		1	MAR 2014	Addresses Review Comments	DLM
		NO	DATE	DESCRIPTION	BY

REVISIONS

ARC ENTERPRISES, INC.
ADVANCED RESOURCES & CONST. ENTERPRISES, INCORPORATED
P.O. BOX 120 KINGFIELD, ME. 04947
PHONE: (207) 265-2646 ~ FAX: (207) 265-4054

DRAFTER DLM	SUPPORT BEAM "SB1" PLANS AND DETAILS	PROJECT NO. 13-169
DATE JAN. 2014	MIDDLEBURY, VERMONT VT ROUTE 125, BRIDGE NO. 13	DWG. NO. 1
CHECKED		
DATE	T BUCK CONSTRUCTION	

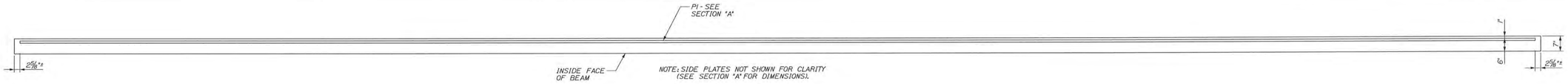

TOP VIEW

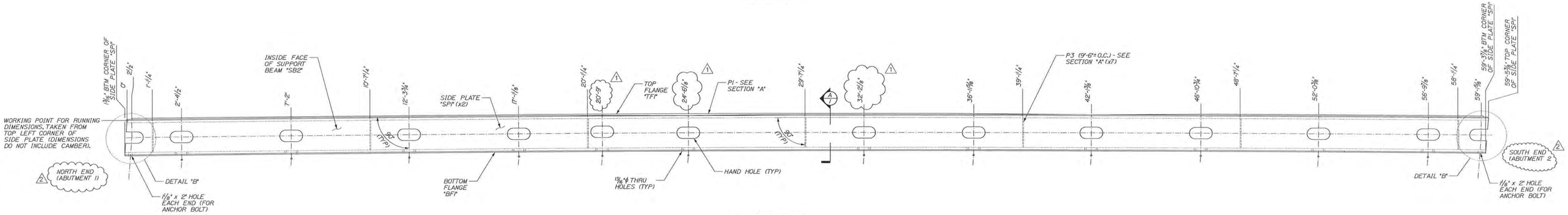

ELEVATION VIEW

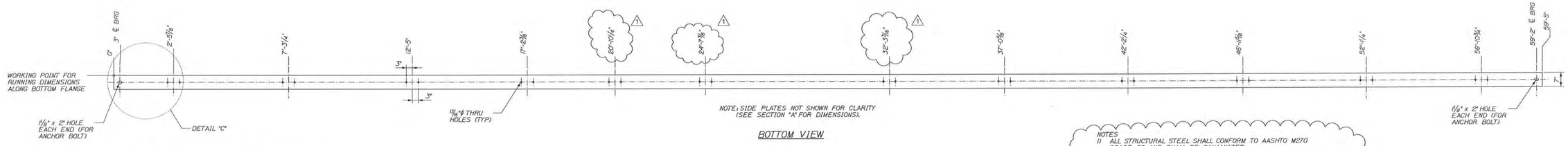

BOTTOM VIEW

SUPPORT BEAM "SB2" DIMENSIONAL PLANS ELEVATION
SCALE: ½" = 1'-0"

NOTES
1) ALL STRUCTURAL STEEL SHALL CONFORM TO AASHTO M270 GRADE 50 AND SHALL BE GALVANIZED.
2) ALL MEMBERS MARKED (CVN) MUST MEET THE CHARPY V-NOTCH TESTING REQUIREMENTS. (SEE BILL OF MATERIALS FOR DESIGNATION).

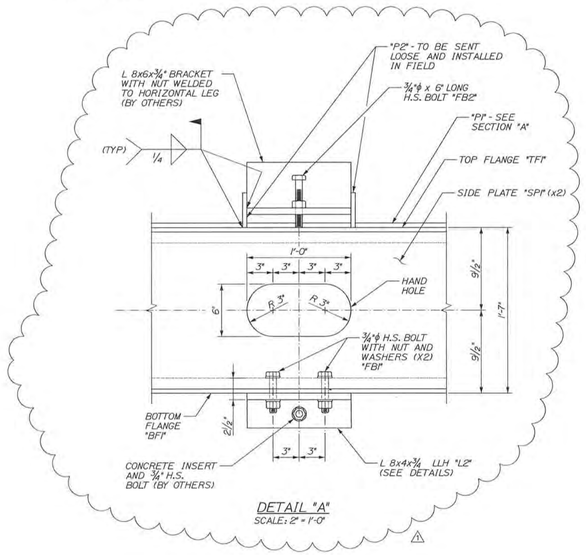

DETAIL "A"
SCALE: 2" = 1'-0"

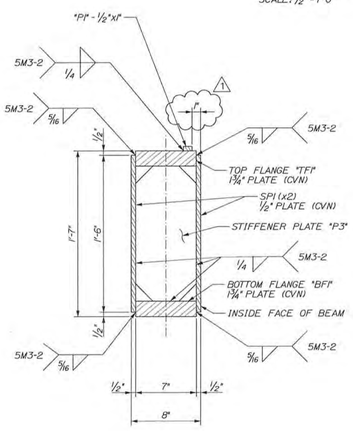

SECTION "A"
SCALE: 1½" = 1'-0"

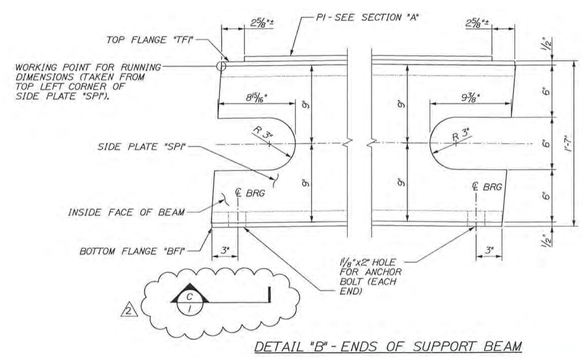

DETAIL "B" - ENDS OF SUPPORT BEAM
SCALE: 2" = 1'-0"

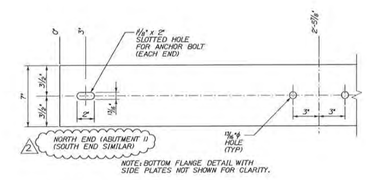

DETAIL "C"
SCALE: 1½" = 1'-0"

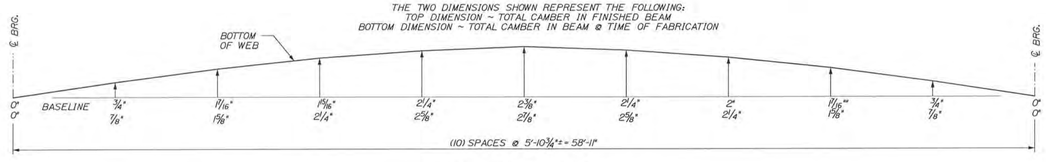

SUPPORT BEAM "SB2" CAMBER
NTS

Vermont Agency of Transportation
RECEIVED
ON: March 26, 2014
and Checked for
CONFORMANCE
BY: Jennifer Fitch DATE: 03/28/2014

SHOP DRAWING REVIEW

☒ REVIEWED AS REQUIRED BY THE CONSTRUCTION CONTRACT DOCUMENTS AND APPROVED, BUT ONLY FOR CONFORMANCE TO THE DESIGN CONCEPT OF THE WORK, AND SUBJECT TO FURTHER LIMITATIONS AND REQUIREMENTS CONTAINED IN THE CONSTRUCTION CONTRACT DOCUMENTS.

☐ REJECTED ☐ REVISE AND RESUBMIT ☐ FURNISH AS CORRECTED

CORRECTIONS OR COMMENTS MADE ON THE SHOP DRAWINGS DURING THIS REVIEW DO NOT RELIEVE CONTRACTOR FROM COMPLIANCE WITH REQUIREMENTS OF THE DRAWINGS AND SPECIFICATIONS. THIS CHECK IS ONLY FOR REVIEW OF GENERAL CONFORMANCE WITH THE DESIGN CONCEPT OF THE PROJECT AND GENERAL COMPLIANCE WITH THE INFORMATION GIVEN IN THE CONTRACT DOCUMENTS. THE CONTRACTOR IS RESPONSIBLE FOR: CONFIRMING AND CORRELATING ALL QUANTITIES AND DIMENSIONS; SELECTING FABRICATION PROCESSES AND TECHNIQUES OF CONSTRUCTION; COORDINATING HIS WORK WITH THAT OF ALL OTHER TRADES; AND PERFORMING HIS WORK IN A SAFE AND SATISFACTORY MANNER.

VHB Vanasse Hangen Brustlin, Inc.
Job Number: 57438.00
Reviewed By: B. Mann
Date: 3-27-14

Bill Of Materials

Ship	Ship Mark	No. PCS	Piece Mark	Description	Length	Remarks	Material
1	SB2			Support Beam			
		1	TF1	Top Flange 1 3/4"x7" (CVN)	59'-5 1/4"		AASHTO M270, Grade 50
		1	BF1	Bottom Flange 1 3/4"x7" (CVN)	59'-5"		AASHTO M270, Grade 50
		2	SP1	Side Plate 1/2"x1'-6" (CVN)	59'-6 9/16"		AASHTO M270, Grade 50
		1	P1	1" Wide x 1/2" Thick	59'-0"		AASHTO M270, Grade 50
		7	P3	7" Wide x 3/8" Thick Stiffener Plate	1'-3 1/2"		AASHTO M270, Grade 50

FINISH					
MATERIAL	SEE BILL OF MATERIALS				
HOLES	SEE PLANS				
ELECTRODES	PER WELD PROCEDURE				
WELDS	PER WELD PROCEDURE	2	MAR 2014	Hole at north end of SB1	DLM
SURFACE PREP	SSPC SP10	1	MAR 2014	Addresses Review Comments	DLM
		NO	DATE	DESCRIPTION	BY

REVISIONS

ARC ENTERPRISES, INC.
ADVANCED RESOURCES & CONST. ENTERPRISES, INCORPORATED
P.O. BOX 120 KINGFIELD, ME. 04947
PHONE: (207) 265-2646 - FAX: (207) 265-4054

DRAFTER DLM	SUPPORT BEAM "SB2" PLANS AND DETAILS	PROJECT NO.	13-169
DATE JAN. 2014	MIDDLEBURY, VERMONT VT ROUTE 125, BRIDGE NO. 13		
CHECKED		DWG. NO.	2
DATE	GC: T BUCK CONSTRUCTION		

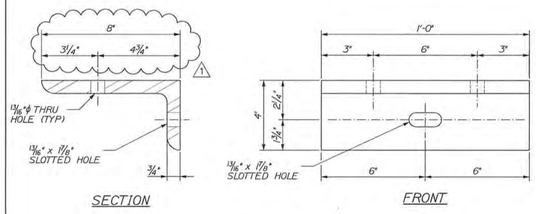

"L2" DETAILS
SCALE: 3" = 1'-0"

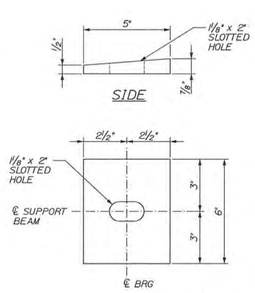

SOLE PLATE DETAILS "SP2"
SCALE: 3" = 1'-0"

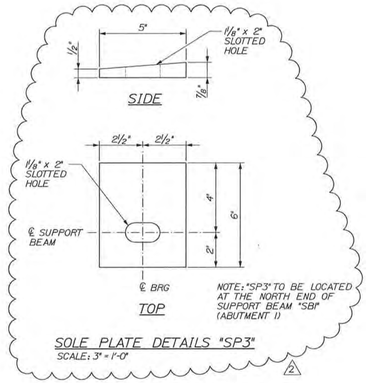

SOLE PLATE DETAILS "SP3"
SCALE: 3" = 1'-0"

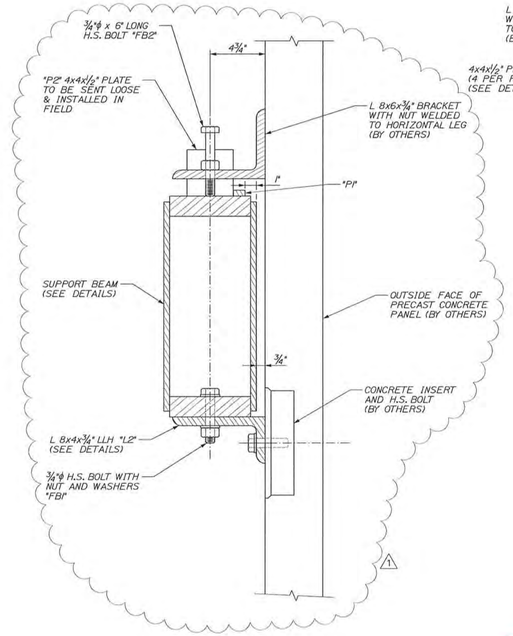

SECTION "B"
SCALE: 2" = 1'-0"

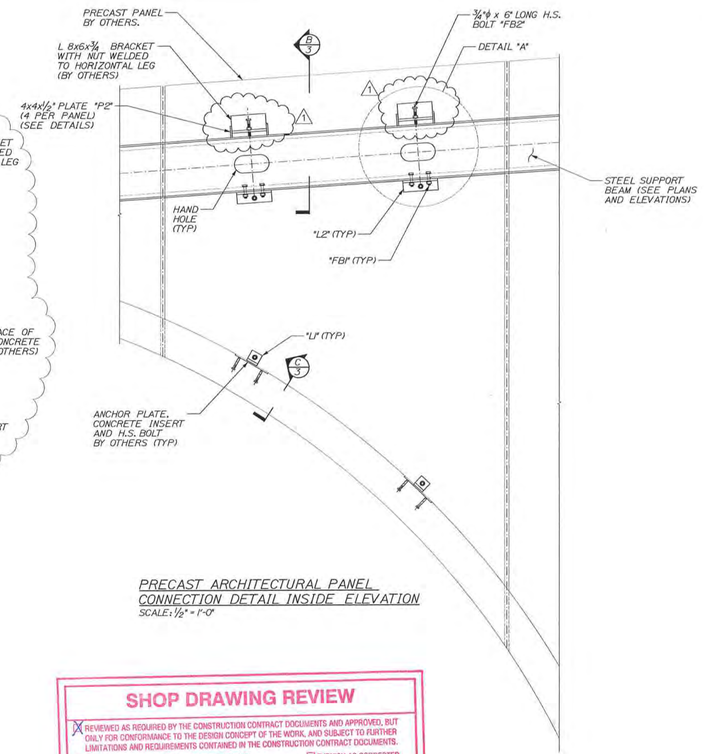

PRECAST ARCHITECTURAL PANEL CONNECTION DETAIL INSIDE ELEVATION
SCALE: ½" = 1'-0"

Vermont Agency of Transportation

RECEIVED

ON: March 26, 2014

and Checked for

CONFORMANCE

BY: Jennifer Fitch DATE: 03/28/2014

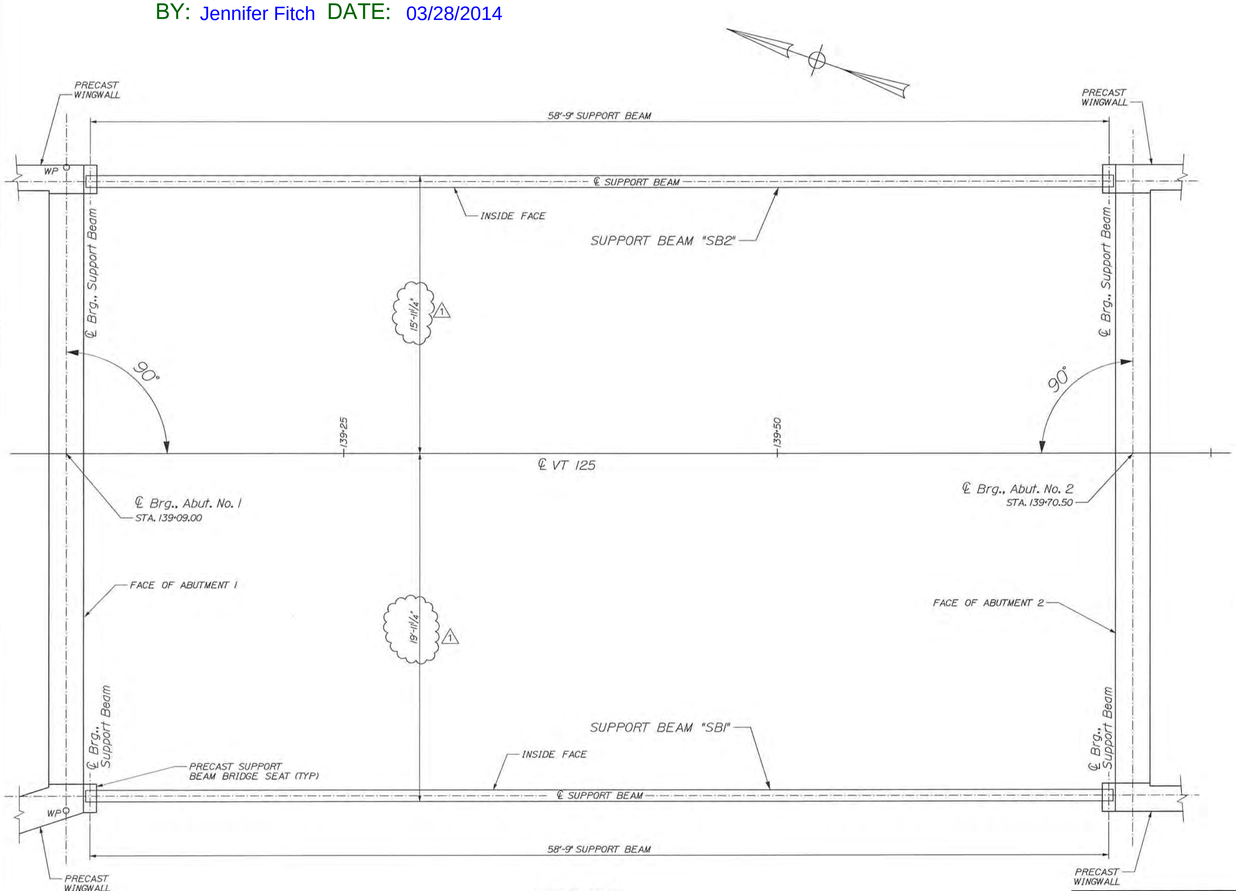

LAYOUT PLAN
SCALE: 1/4" = 1'-0"

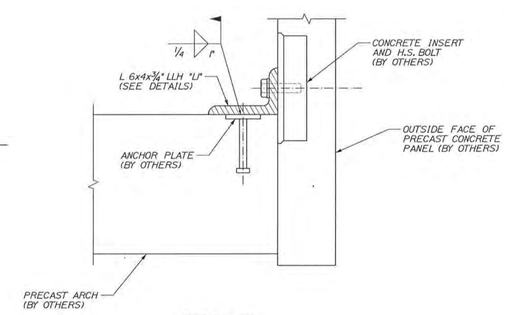

SECTION "C"
SCALE: 2" = 1'-0"

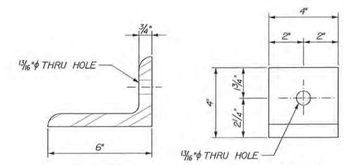

"L1" DETAILS
SCALE: 3" = 1'-0"

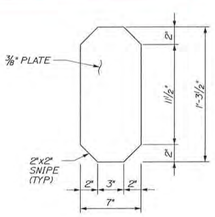

STIFFENER PLATE "P3"
SCALE: 1½" = 1'-0"

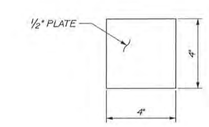

PLATE "P2"
SCALE: 3" = 1'-0"

SHOP DRAWING REVIEW

X REVIEWED AS REQUIRED BY THE CONSTRUCTION CONTRACT DOCUMENTS AND APPROVED, BUT ONLY FOR CONFORMANCE TO THE DESIGN CONCEPT OF THE WORK, AND SUBJECT TO FURTHER LIMITATIONS AND REQUIREMENTS CONTAINED IN THE CONSTRUCTION CONTRACT DOCUMENTS.

☐ REJECTED ☐ REVISE AND RESUBMIT ☐ FURNISH AS CORRECTED

CORRECTIONS OR COMMENTS MADE ON THE SHOP DRAWINGS DURING THIS REVIEW DO NOT RELIEVE CONTRACTOR FROM COMPLIANCE WITH REQUIREMENTS OF THE DRAWINGS AND SPECIFICATIONS. THIS CHECK IS ONLY FOR REVIEW OF GENERAL CONFORMANCE WITH THE DESIGN CONCEPT OF THE PROJECT AND GENERAL COMPLIANCE WITH THE INFORMATION GIVEN IN THE CONTRACT DOCUMENTS. THE CONTRACTOR IS RESPONSIBLE FOR: CONFIRMING AND CORRELATING ALL QUANTITIES AND DIMENSIONS; SELECTING FABRICATION PROCESSES AND TECHNIQUES OF CONSTRUCTION; COORDINATING HIS WORK WITH THAT OF ALL OTHER TRADES; AND PERFORMING HIS WORK IN A SAFE AND SATISFACTORY MANNER.

VHB Vanasse Hangen Brustlin, Inc.

Job Number: 57438.00
Reviewed By: [illegible]
Date: 3-27-14

Bill Of Materials

Ship	Ship Mark	No. PCS	Piece Mark	Description	Length	Remarks	Material
24	L1			L 6x4x3/4	4"	Send Loose to be Field Welded	AASHTO M270, Grade 50
24	L2			L 6x4x3/4	1'-0"	Send Loose to be Field Installed	AASHTO M270, Grade 50
24	P2			1" Wide x 1/2" Thick	4 3/8"	Send Loose to be Field Welded	AASHTO M270, Grade 50
48	FB1			3/4" Dia. H.S. ASTM hex head bolt, Type 1, galvanized w/ nut and 2 washers	4"		
24	FB2			3/4" Dia. H.S. ASTM hex head bolt, Type 1, galvanized	6"		
3	SP2			5" x 7/8" Thick Beveled Sole Plate	6"		AASHTO M270, Grade 50
1	SP3			5" x 7/8" Thick Beveled Sole Plate	6"		AASHTO M270, Grade 50
14	P3			7" Wide x 3/8" Thick Stiffener Plate	1'-3 1/2"		AASHTO M270, Grade 50

FINISH					
MATERIAL	SEE BILL OF MATERIALS				
HOLES	SEE PLANS				
ELECTRODES	PER WELD PROCEDURE				
WELDS	PER WELD PROCEDURE	2	MAR 2014	Hole at north end of SB1	DLM
SURFACE PREP	SSPC SP10	1	MAR 2014	Addresses Review Comments	DLM
		NO	DATE	DESCRIPTION	BY

REVISIONS

ARC ENTERPRISES, INC.

ADVANCED RESOURCES & CONST. ENTERPRISES, INCORPORATED
P.O. BOX 120 KINGFIELD, ME. 04947
PHONE: (207) 265-2646 – FAX: (207) 265-4054

DRAFTER: DLM
DATE: JAN. 2014
CHECKED:
DATE:

MISCELLANEOUS STEEL
MIDDLEBURY, VERMONT
VT ROUTE 125, BRIDGE NO. 13
CC: T BUCK CONSTRUCTION

PROJECT NO. 13-169
DWG. NO. 3