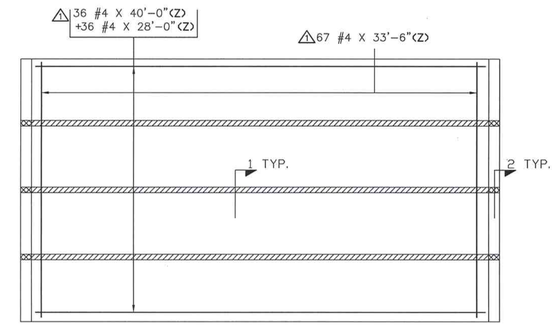

DECK PLAN
OVERLAY REINF.
#4Z BAR @12" O.C.E.W.
CONTRACT REF. SHEET 47

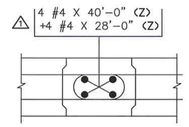

SECT. 1
NEXT CLOSURE POUR
3 THUS
CONTRACT REF. SHEET 47

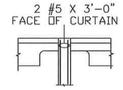

SECT. 2
CURTAIN WALL CLOSURE POUR
6 THUS
CONTRACT REF. SHEETS 51 & 52

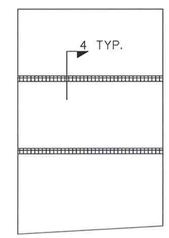

APPROACH SLAB #1
APPROACH SLAB 2 SIMILAR
CONTRACT REF. SHEETS 56 & 57

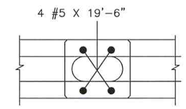

SECT. 4
CLOSURE POUR
4 THUS
CONTRACT REF. SHEET 56

VARIED GROUP
24 BARS TOTAL

Release Number: 001								BAR LIST								
Bar Mark	Qty	Size	Total Length	Type	'A'	'B'	'C'	'D'	'E'	'F'	'G'	'H'	'J'	'K'	'O'	'R'
5AZ01	12	#5	6'-0"	17		3'-0"	3'-0"									
5AZ02	67	#5	5'-8"	17		0'-7"	4'-6"	0'-7"								
Release Number: 003								BAR LIST								
Bar Mark	Qty	Size	Total Length	Type	'A'	'B'	'C'	'D'	'E'	'F'	'G'	'H'	'J'	'K'	'O'	'R'
4AZ01	9	#4	9'-10 ½"	17		4'-8"	0'-6 ½"	4'-8"								
5AZ03a	4	#5	10'-11"			10'-11"										
Varies To																
5AZ03f	4	#5	11'-9"			11'-9"										
Release Number: 004								BAR LIST								
Bar Mark	Qty	Size	Total Length	Type	'A'	'B'	'C'	'D'	'E'	'F'	'G'	'H'	'J'	'K'	'O'	'R'
4AZ01	9	#4	9'-10 ½"	17		4'-8"	0'-6 ½"	4'-8"								

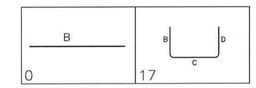

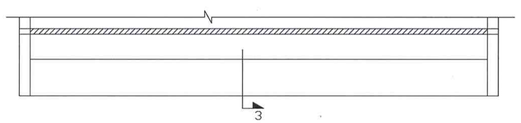

SIDEWALK PLAN
CONTRACT REF. SHEETS 46 & 53

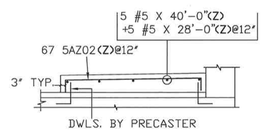

SECT. 3
CONTRACT REF. SHEETS 47 & 53

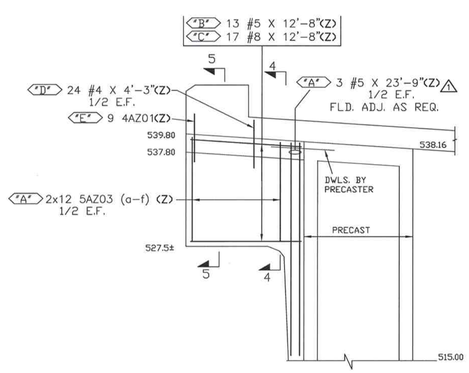

WINGWALL 3
CONTRACT REF. SHEET 65

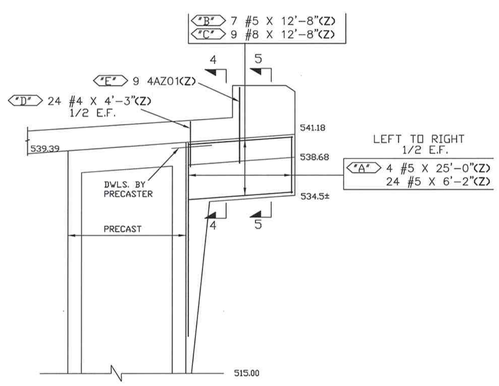

WINGWALL 4
CONTRACT REF. SHEET 66

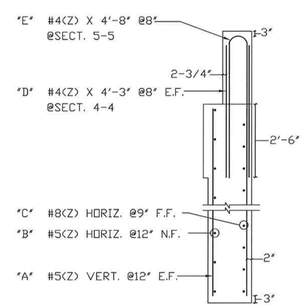

SECT. 4-4/5-5
CONTRACT REF. SHEET L-L/65
N-N/66

Vermont Agency of Transportation
RECEIVED
ON: March 18, 2014
and Checked for
CONFORMANCE
BY: Jennifer Fitch DATE: 03/24/2014

SHOP DRAWING REVIEW
REVIEWED AS REQUIRED BY THE CONSTRUCTION CONTRACT DOCUMENTS AND APPROVED, BUT ONLY FOR CONFORMANCE TO THE DESIGN CONCEPT OF THE WORK, AND SUBJECT TO FURTHER LIMITATIONS AND REQUIREMENTS CONTAINED IN THE CONSTRUCTION CONTRACT DOCUMENTS.
☐ REJECTED ☐ REVISE AND RESUBMIT ☐ FURNISH AS CORRECTED
CORRECTIONS OR COMMENTS MADE ON THE SHOP DRAWINGS DURING THIS REVIEW DO NOT RELIEVE CONTRACTOR FROM COMPLIANCE WITH REQUIREMENTS OF THE DRAWINGS AND SPECIFICATIONS. THIS CHECK IS ONLY FOR REVIEW OF GENERAL CONFORMANCE WITH THE DESIGN CONCEPT OF THE PROJECT AND GENERAL COMPLIANCE WITH THE INFORMATION GIVEN IN THE CONTRACT DOCUMENTS. THE CONTRACTOR IS RESPONSIBLE FOR: CONFIRMING AND CORRELATING ALL QUANTITIES AND DIMENSIONS; SELECTING FABRICATION PROCESSES AND TECHNIQUES OF CONSTRUCTION; COORDINATING HIS WORK WITH THAT OF ALL OTHER TRADES; AND PERFORMING HIS WORK IN A SAFE AND SATISFACTORY MANNER.
VHB Vanasse Hangen Brustlin, Inc.
Job Number: 57438.00
Reviewed By: B Mann
Date: 3-21-14

TEST BARS
2 #5 X 5'-0" (Z)
2 #4 X 5'-0" (Z)
2 #5 X 5'-0" UNCOATED

Z BAR LAP CHART	
BAR SIZE	LAP
#4	2'-0"
#5	2'-6"

FOR APPROVAL

LEGEND:
CONT.-CONTINUOUS
TRANS.-TRANSVERSE
DWLS.-DOWELS
VERTS.-VERTICAL
HORIZ.-HORIZONTAL
T&B -TOP & BOTTOM
I.F.-INNER FACE
O.F.-OUTER FACE
E.E.-EACH END
E.F.-EACH FACE
F.F.-FRONT FACE
R.F.-REAR FACE
E.W.-EACH WAY
O.C.-ON CENTER
L.W.-LONG WAY
S.W.-SHORT WAY

ELEVATIONS & DIMENSIONS SHOWN ON THIS DWG. ARE FOR REINF. DETAILING PURPOSES ONLY AND ARE NOT INTENDED FOR CONSTRUCTION.

REINF. BARS ASTM A615 GRADE 60

DUAL COAT REINF. BARS ASTM A615 GRADE 60 MARKED (Z)

VERIFICATION OF UNCLEAR INFORMATION MAY BE REQUESTED ON THIS DRAWING. SHOULD VERIFICATION BE LEFT UN-ADDRESSED IT WILL REMAIN AS SHOWN AND ASSUMED TO BE CORRECT.

6			
5			
4			
3			
2	03/18/14	△	REV'D/ENG. COMM./APPROVAL
1	03/05/14	0	APPROVAL
	DATE	REV.#	SENT FOR

DIMENSION
DIMENSION FABRICATORS INC.
2000 7TH STREET
SCOTIA, N.Y. 12302
PH: (518) 374-1936
FAX (518) 374-4630
www.dimensionfabricators.com

STRUCTURE	VTAOT MIDDLEBURY RS 0174(8)
LOCATION	VT RT 125 OVER MIDDLEBURY RIVER MIDDLEBURY VT.
ARCHITECT	
ENGINEER	VHB
CUSTOMER	T BUCK CONSTRUCTION, INC.

DRAWN BY	DATE	DFI #
WAYNE	03/05/14	8760

DRAWING COVERS	DRAWING #
DECK CLOSURE POURS, SIDEWALK AND WINGWALL 3 AND 4 REINF.	A