Supporting Calculations
For
Addition of Temporary access Brackets
In Precast facing panels
In
Middlebury Vermont

CEE 083-br-13

Vermont Agency of Transportation
RECEIVED
ON: March 28, 2014
and Checked for
CONFORMANCE
BY: Jennifer Fitch DATE: 03/31/2014

STATE OF VERMONT
ERIC J. BALDERWOOD
NO. 8711
Structural
LICENSED
PROFESSIONAL ENGINEER

SUBMITTAL REVIEW

☒ Reviewed and approved but only for conformance to the Construction Contract Documents.

☐ Revise and Resubmit

Corrections or comments made during this review do not relieve the Contractor or his Designer from compliance with professional requirements or for responsibility for the adequacy of the submittal information. This check is only for review of general conformance with industry standards and general compliance with the information given in the Contract Documents. VHB has not conducted a detailed review of the submittal and has not performed calculations or assessed the adequacy of loads, design criteria, quantities, dimensions, etc. Approval of the submittal does not constitute VHB's approval of any construction means, methods or techniques. These remain the responsibility of the Contractor.

VHB
Vanasse Hangen Brustlin, Inc.

Job Number: 57438.00
Reviewed By: G.S. Goodrich
Date: 3-28-2014

Supporting Calculations
For
Addition of Temporary access Brackets In Precast facing panels
In
Middlebury Vermont

CEE 083-br-13

STATE OF VERMONT
ERIC T. CALDERWOOD
NO. 8711
Structural
LICENSED
PROFESSIONAL ENGINEER

Prepared for:

TBuck Construction Inc.

By:
Calderwood Engineering etc
March, 2014

CALDERWOOD ENGINEERING
222 RIVER ROAD
RICHMOND, ME 04357
PH. (207) 737-2007 FAX (207) 737-2008

Executive Summary

Calderwood Engineering has assessed the contractor's plan to access the cast in place coping portion of the fascia over the precast panel fascia by placing inserts in the precast facing to accept a bolt through a wall plate assembly on a Dayton Superior C-49-JR overhang brackets. Brackets should be set to the minimum depth of 16" and the inserts should be spaced at approximately 4'-5" spacing or (2) per panel. Calderwood Engineering recommends placing the insert such that it is on the opposite side of the panel as the uppermost P-30 Corewall Slotted inserts, and 1'-9" above those inserts.

The stress in the panels due to the live and dead load were analyzed as if they were applied to a 1' wide vertical strip of panel at each overhang bracket, there will not be any torsion induced in the steel girder because the supporting bolt can rotate freely about the base of the bolt, the bottom of the precast panel will kick off the arch at the bottom or in those areas off the arch at each end of the structure it will kick off an angle iron provided and anchored into the precast concrete footing.

Live loading on the access platform should be maintained at or below 40 psf.

Simultaneous to the live loading a 50 MPH wind loading was applied to the panels.

The maximum induced tensile stress at service loads due to the wind load, self weight of the panels, and the live and dead load of the access platform is 13.83 ksi. The maximum anticipated compression in flexure of the panels at the same time was calculated to be 1.03 ksi. Panels have a design strength of 5 ksi. Using an allowable stress design methodology as per AASHTO Std Specifications for Highway Bridges these stresses are considered to be acceptable. The maximum load "kicked" from the angle iron or arch at the bottom of the panel was calculated to be about 320 lbs. This load can easily be carried by the arch or the angle iron by inspection.

The vertical load at the panel points was added to the weight of the panels and applied to the steel welded box girder. Simultaneous to that a 50 MPH wind reaction was calculated and applied in the weak axis of the welded box girder. Steel girder bending stresses were calculated to be acceptable. Shear stresses were not considered, the total additional load applied to the steel girder by the access platform is about 1,630 lbs of shear or an additional shear stress of 140 psi which is relatively insignificant.

Calderwood Engineering recommends TBuck be allowed to install (2) inserts per panel as discussed within this summary and calculations. Inserts must be capable of supporting 240 lbs of tension, and 280 lbs of shear per insert. Inserts should be galvanized and grouted over once platform is no longer needed. Planking should be loaded with live load in the center 12" of the planking only. All access platform and planking shall be limited to 40 lbs per linear foot of platform live load, and shall be fully removed if the wind speed is expected to reach or exceed 50 MPH.

CALDERWOOD ENGINEERING ETC, LLC
222 RIVER ROAD
RICHMOND, ME 04357
PH. (207) 737-2007 FAX (207) 737-2008
www.calderwoodengineering.com

JOB 083-BR-13 MIDDLEBURY
SHEET NO. 1 OF 11
CALCULATED BY ETC DATE 3/2014
CHECKED BY DATE
SCALE

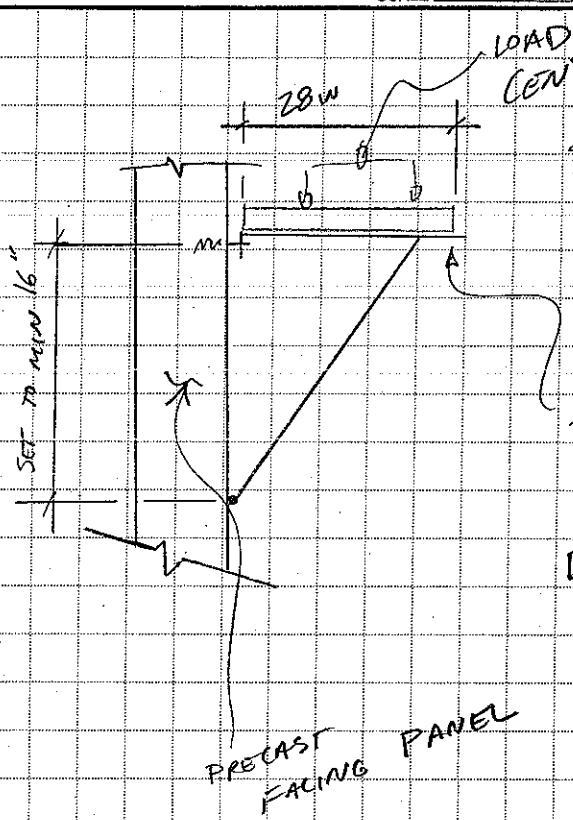

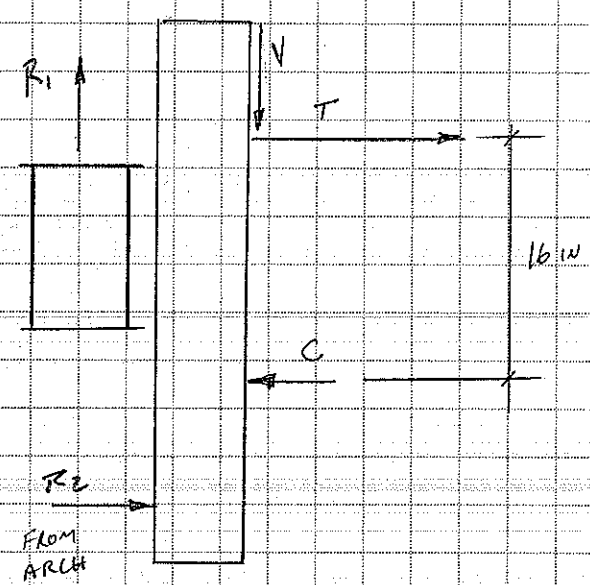

TOTAL LOAD $V = \frac{9.9\ ft}{2} * 55_{psf} = 272.25\ lbs$

C-49 Bridge Overhang Brackets

DAYTON® SUPERIOR

C-49, C-49-D, C-49-S and C-49-JR Bridge Overhang Brackets

Dayton Superior offers the bridge contractor four different versions of the C-49 Bridge Overhang Bracket, which allows for maximum adjustability to meet the varied bridge overhang forming requirements on both structural steel and precast/prestressed concrete beams. The C-49 is the most versatile overhang bracket available and is used for general conditions.

The C-49-D version is used on deep beams. The C-49-D bracket is identical to the C-49 bracket, except it uses longer bottom diagonal and vertical legs.

The C-49-S bracket is a field modified C-49. The C-49 is modified by removing the inner vertical leg. Using only the outer vertical leg, the bracket can be adjusted to a minimum vertical height of 14". This bracket is ideal for use on short steel or concrete beams.

The C-49-JR is a small bracket used in situations where the horizontal member of the standard C-49 Overhang Bracket is too long, due to limited space between twin bridges.

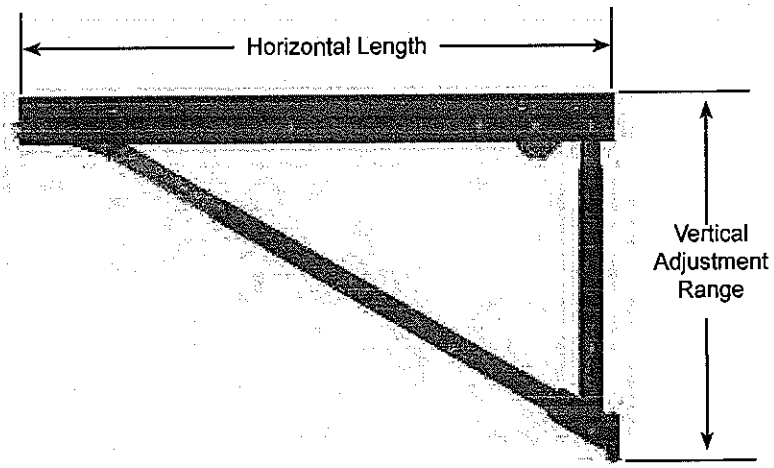

Bracket Type	Vertical Adjustment Range	Horizontal Length
C-49	30" - 50"	54"
C-49-D	50" - 70"	54"
C-49-S	16" - 28"	54"
C-49-JR	16" - 28"	27"

The adjusting nut at the outboard end of the bracket is used to adjust the bracket to grade.

Each of these brackets offer the bridge contractor, the ability to easily and quickly preset the brackets to size and shape on the ground, as required for each specific overhang requirement. The adjusting nut and the wide range of adjustability built into the brackets vertical and diagonal legs allow a bracket to be adjusted to fit almost any standard bridge overhang.

Both the vertical and diagonal legs have adjustment holes spaced at 2" increments which allows the legs to be adjusted so the diagonal leg will transfer the construction load to near the bottom flange, which aids in resisting web deflection and bending .

The C-54 Extender, C-52, C-52P and C-53 Guardrail Receptacles, and C-51 Wall Plate Assemblies add to the versatility of the C-49 overhang brackets.

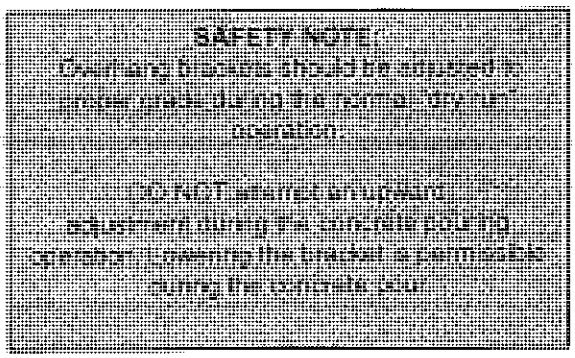

CALDERWOOD ENGINEERING ETC, LLC
222 RIVER ROAD
RICHMOND, ME 04357
PH. (207) 737-2007 FAX (207) 737-2008
www.calderwoodengineering.com

JOB 083-BR-13 MIDDLEBURY
SHEET NO. 3 OF 11
CALCULATED BY ETC DATE 5/14
CHECKED BY DATE
SCALE

ADD'L LOAD ON STEEL BM

R_1 = 272.25 lbs / POINT LOAD

T = 272.25 lbs * 14 IN / 16 IN = 238.22 lbs

C = T = 238.22 lbs

ADDITIONAL LOAD R_2 REACTION @ ARCH

IS DEPENDENT ON THE EXACT DISTANCE FROM T TO R_2 HOWEVER IT IS GREATEST AT THE DEEPEST SECTION

THERE IS NO ABILITY TO TRANSMIT MOMENTS TO THE BEAM AND IN ORDER TO PREVENT THAT LOADING WE SHOULD ENSURE THAT THE DESIGNED 3/4" JOINT BETWEEN THE BACK OF THE PANEL & THE STEEL BEAM REMAINS COMPLETELY CLEAR.

LOCATE INSERTS FOR OH BRACKETS

@ 1.75 SE ABOVE P30 INSERTS IN PRECAST

DNLS (ONLY ON THE NEAR SIDE)

CALDERWOOD ENGINEERING ETC, LLC
222 RIVER ROAD
RICHMOND, ME 04357
PH. (207) 737-2007 FAX (207) 737-2008
www.calderwoodengineering.com

MAXIMUM DISTANCE FROM TOP INSERT FOR T TO BTM OF PNL @ REACTION = 20 ft +/- (AT PNLS SHTN 7 & SHTN 6)

IN AREAS WHERE PANELS ARE BEYOND END OF ARCH CONTRACTOR MAY ANCHOR TEMP. KICKER OF ANGLE IRON IS ANCHORED TO PRECAST FOOTING AT APPROXIMATE OH. BRACKET LOCATION.

MINIMUM DISTANCE FROM T TO CENTER OF ARCH = 2'-4" +/-

MOMENT IN PNL

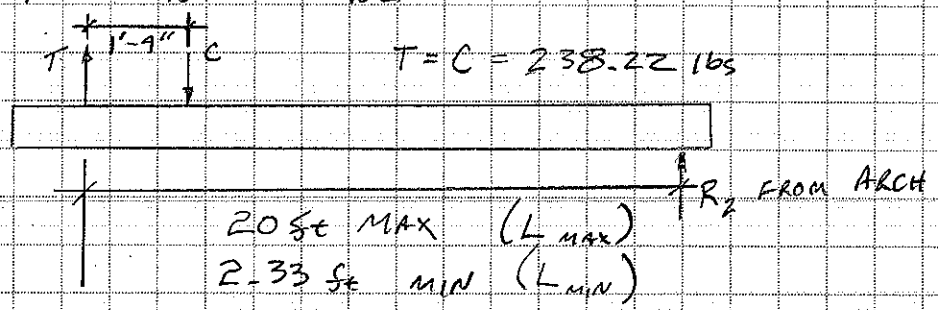

T = C = 238.22 lbs

R_2 @ L_{MAX} = 238.22 lbs * 1.333 ft / (20 ft - 1.33 ft) = 17.01 lbs

MOMENT IN PNL = 17.01 * (20 ft - 1.33 ft) = 317.58 lb-ft

R_1 @ L_{MIN} = 238.22 lbs * 1.333 ft / (2.33 ft - 1.33 ft) = 317.58 lbs

MOMENT IN PNL = 317.58 lb-ft

CALDERWOOD ENGINEERING ETC, LLC
222 RIVER ROAD
RICHMOND, ME 04357
PH. (207) 737-2007 FAX (207) 737-2008
www.calderwoodengineering.com

MOMENTS & REACTIONS ARE CALCULATED ON A PER OH. BKT LOCATION BASIS OR ON A 9.95 ft SECTION.

FOR THE SAKE OF SIMPLICITY & CONSERVATISM LETS ASSUME THAT THE LOAD @ EACH OH BKT IS DISTRIBUTED TO ONLY 1 L.F. OF PANEL

AREA OF STEEL = 0.44 in^2/FT

(#6's @ 12 IN SPC)

f'_c = 5 ksi

$E_c = 1820\sqrt{5} = 4070$ ksi

E_s = 29000 ksi

M_u /FT $\leq$ 317.58 lb-ft = 3.811 k-in /FT

MOMENT DUE TO OH DROPS TO

$3.811 \text{ k-in/FT} * \frac{15}{55} = 1.0394 \text{ k-in/FT}$ w/o LL.

CALDERWOOD ENGINEERING ETC, LLC
222 RIVER ROAD
RICHMOND, ME 04357
PH. (207) 737-2007 FAX (207) 737-2008
www.calderwoodengineering.com

JOB 083-BR-13 MIDDLEBURY
SHEET NO. 6 OF 11
CALCULATED BY ETC DATE 3/19
CHECKED BY DATE
SCALE

ASSUME DESIGN WIND SPEED FOR
DURATION OF CONSTRUCTION = 120 MPH

REMOVE OH BRACKETS & PLANKING
WHEN WIND SPEED ≥ 50 MPH

WIND PRESSURE

$= 0.00256 (50 \text{ MPH})^2 = 6.40 \text{ psf}$ W/ LL

ADD'L MOMENT / FT DUE TO WIND

$M_{wind} = 6.40 \text{ psf} * 20 \text{ ft}^2 / 8 = 320 \text{ lb-ft}$ / FT
W/ LL

CALDERWOOD ENGINEERING ETC, LLC
222 RIVER ROAD
RICHMOND, ME 04357
PH. (207) 737-2007 FAX (207) 737-2008
www.calderwoodengineering.com

MAXIMUM MOMENT IN PNL

$$= 320 \text{ ft-lbs/ft} * 12/1000 + 3.811 \text{ k-in/ft} = 7.651 \text{ k-in/ft}$$

MAX

ADD'L TENSION IN REBAR DUE TO SELF WT OF PNL

$$= \frac{150 \text{ pcf} * 5\text{in}/12\text{in} * 21.83\text{ft} * 1\text{ft}}{1000 \text{ lbs/k} * 0.44 \text{ in}^2/\text{ft}} = 3.097 \text{ ksi}$$

Moment in Panels due to OH Brackets + 50 MPH wind

Concrete Beam depth	5 in	Ec	4070 psi
Concrete Beam Width	12 in	Es	29000 psi
Area of Steel	0.44 in2		
Y_{bar} to Steel	3.125 in		from extreme tens fiber to centroid of tensile bar
			Applied Moment 7.651 in-k
Transformed As	3.135135 in2		
Assume c=	0.762398 in	Recommend try C=	0.762469

$(C^2*B/2)$ 3.487504262 3.488158 $A_{trans}*(d-c-y_{bar})^2$

OKAY

I= 5.653508663 in^4

S conc = 7.415429556 in^3 at ext. comp. fiber
S stl= 0.713139738 in^3 in rebar

Compressive Bending Stress = 1.031768 ksi
Tensile Bending Stress = 10.72861 ksi

TOTAL TENSION IN REINF

f_t = 10.729 ksi + 3.097 ksi = 13.83 ksi

ALLOWABLE TENSILE STRESS IN GRADE 60 REINFORCING = F_T = 24 ksi (PER AASHTO STD SPEC: 17TH ED.)

1.032 ksi COMPRESSION ≤ 0.4 * 5 ksi = 2 ksi

∴ OK IN COMPRESSION ALSO.

PNLS ARE OK W/ OH LOAD

CALDERWOOD ENGINEERING ETC, LLC
222 RIVER ROAD
RICHMOND, ME 04357
PH. (207) 737-2007 FAX (207) 737-2008
www.calderwoodengineering.com

ADD WEIGHT OF 272.25 lbs TO EACH POINT LOAD FROM PRECAST TO ACCOUNT FOR LOAD OF O.H. BKTS & PLANKING

PANEL MK	PANEL WT	PNL LOAD / POINT	TOTAL LD/PT
SHPN 1	4.29 T	4,290 lbs	4563 #
SHPN 2	2.65 T	2,650 lbs	2923 #
SHPN 3	1.43 T	1,430 lbs	1,703 #
SHPN 4	1.69 T	1,690 lbs	1,963 #
SHPN 5	3.43 T	3,430 lbs	3,703 #
SHPN 6	6.37 T	6,370 lbs	6,643 #
SHPN 7	5.74 T	5,740 lbs	6013 #
SHPN 8	3.24 T	3,240 lbs	3513 #
SHPN 9	1.62 T	1,620 lbs	1893 #
SHPN 10	1.41 T	1,410 lbs	1683 #
SHPN 11	2.62 T	2,620 lbs	2893 #
SHPN 12	4.00 T	4,000 lbs	4273 #

$$I \cong (18^3 * 1_{IN})/12 + 2*(1.75)^3(7_{IN})/12 + (2)*1.75_{IN}*7_{IN}*(8.625_{IN})^2 - (6^3 * 1_{IN})/12$$

$$I \cong 2296.8 \text{ IN}^4$$

$$S = 2296.8 \text{ IN}^4 / 9.5 \text{ IN} = 241.77 \text{ IN}^3$$

SELF WT OF BEAM $\cong$ 150 LBS/LF

BEAMBOY V2.2 REPORT

Stress in Support beam SB-2, SB-1 SIMILAR

BEAM PROPERTIES

Beam Length = 58.75 ft.
Moment of Inertia = 2296.8 in^4
Modulus of Elasticity = 29000000 psi
Distance From Neutral Axis to Furthest Fiber = 9.5 in.

LOAD CONFIGURATION

Point Loads

6013 lb., x=2.25 ft.
6013 lb., x=84.25 in.
3513 lb., x=12.146 ft.
3513 lb., x=16.917 ft.
1893 lb., x=22.042 ft.
1893 lb., x=26.812 ft.
1683 lb., x=34.458 ft.
1683 lb., x=38.208 ft.
2893 lb., x=41.63 ft.
2893 lb., x=46.604 ft.
4273 lb., x=51.73 ft.
4273 lb., x=56.5 ft.

Distributed Loads

Start=150 lb./ft., x=0 ft.; End=150 lb./ft., x=58.75 ft.

Moments

Supports

Simple support: 0 ft., Reaction=26373 lb.
Simple support: 58.75 ft., Reaction=22975 lb.

MAXIMUM VALUES

Maximum Bending Moment = 291190 lb.-ft. at x=26.814 ft.
Maximum Bending Stress = 14.453 ksi at x=26.814 ft.
Maximum Deflection = -2.8131 in. at x=29.163 ft.
Maximum Slope = -0.75792 degrees at x=0.005875 ft.

$r_t = \sqrt{I_t / A_t}$

$I_t = \frac{7^3 * 1.75}{12} + \frac{(2)(1/2)^3(6)}{12} + 2(1/2)(6) * 3.75^2$

$I_t = 134.52 \text{ in}^4$

$A_t = 7\text{ in} * 1.75\text{ in} + (2)(1/2'')*(6'') = 18.25 \text{ in}^2$

$r_t = \sqrt{\frac{134.52 \text{ in}^4}{18.25 \text{ in}^2}} = 2.715 \text{ in}$

14.45 ksi

$l = 120$ IN +/- FROM DIAPHRAGM PL TO DIAPHRAGM PL

THESE WILL ACT IN CONJUNCTION W/ FIELD WELDED KEEPER PL TO BRACE SECTION AGAINST ROTATION

$l / r_t = 120 / 2.715 = 44.2$

$F_b = \left[\frac{2}{3} - \frac{50 \text{ ksi} (44.2)^2}{1530 * 10^3 * 1.0} \right] * 50 \text{ ksi} \leq 0.6 * 50 \text{ ksi}$

$= 30 \text{ ksi}$

CALDERWOOD ENGINEERING ETC, LLC
222 RIVER ROAD
RICHMOND, ME 04357
PH. (207) 737-2007 FAX (207) 737-2008
www.calderwoodengineering.com

JOB 083-BR-13 MIDDLEBURY
SHEET NO. 11 OF 11
CALCULATED BY ETC DATE 3/14
CHECKED BY DATE
SCALE

HORIZONTALLY APPLIED LOAD

DUE TO 50 MPH WIND LOADING

$\leq 20\,ft/2 * 6.4\,psf = 64\,lbs/LF$

$M_{u_{yy}} \leq 64\,lbs/LF * (58.75\,ft)^2/8 = 27{,}612.5\,lb\text{-}ft$

$M_{u_{yy}} \leq 27{,}612.5\,lb\text{-}ft * 12\,in/ft / 1000\,lbs/k = 331.35\,k\text{-}in$

$I_{yy} = (2)(7)^3(1.75)/12 + \left[(1/2)^3(18-6)/12\right] * 2 +$

$1/2'' * (18''-6'') * (3.75)^2 * 2 = 269.04\,in^4$

$S_{yy} = \frac{269.04\,in^4}{4\,in} = 67.26\,in^3$

$S_{b_{yy}} = 331.35\,k\text{-}in / 67.26\,in^3 = 4.93\,ksi$

$F_{b_{yy}} = 0.75\,F_y = 0.75 * 50\,ksi = 37.5\,ksi$
(WEAK AXIS)

✓ COMBINED STRESSES

$\frac{14.45\,ksi}{30\,ksi} + \frac{4.93\,ksi}{37.5\,ksi} = 0.613 \leq 1.00$

∴ O.K.