Vermont Agency of Transportation
RECEIVED
Huntington BRO 1445(35) TCP Narrative.pdf
CK'D BY D. Peterson OK'D BY C. Carlson
May 4, 2016
RESUBMIT no Approved
BY C. Carlson DATE 05/04/2016

TRAFFIC CONTROL PLAN NARRATIVE

Project: Huntington BRO 1445(35)

Location: Camels Hump Road (TH #22); Bridge No. 30 located 1.4 miles east of Taft Road (TH #4)

Length: 350 feet

Date: April 18, 2016

Project Completion Date: October 28, 2016

Contractor: Parent Construction, Inc.
P.O. Box 489
14818 Route 116
Hinesburg, VT 05461
Project Superintendent: TBD
Traffic Control Coordinator: TBD
Emergency contact list to be provided by the Contractor.

Prepared by: Lamoureux & Dickinson Consulting Engineers, Inc.
14 Morse Drive
Essex, VT 05452

1.0 Purpose:

The purpose of this Traffic Control Plan is to present site specific construction methods for work zone traffic control. This work will consist of furnishing, installing, maintaining and removing traffic control devices necessary to provide reasonable protection & advanced warning for motorists, pedestrians and construction workers.

Traffic control measures include, but are not necessarily limited to, signs, markings, channeling devices, flaggers, and uniformed traffic officers. This plan is intended to comply with the Traffic Control Plan Requirements and the VTrans Work Zone Safety & Mobility Guidance Document, Appendix "A" Temporary Traffic Control Devices.

All traffic control devices will conform to the requirements of Parts 5 and 6 of the 2009 edition of the MUTCD, Rev. 2 (Manual on Uniform Traffic Control Devices), to the NCHRP 350 guidelines and to the requirements of this Traffic Control Plan. The Traffic Control Plan, MUTCD, and Contract Documents will be available at the construction site through the Project Superintendent. In the event of any conflicts between the MUTCD, this Traffic Control Plan, and the Contract Plans; the MUTCD will govern.

2.0 Project Description:

This Project consists of constructing a replacement for Bridge No. 30 on new alignment together with associated approach construction and removal of the existing bridge and its approaches.

3.0 Project Schedule

Work on this Project will begin in May 2016 and will be completed by October 28, 2016.

4.0 Traffic Control Elements included in Contract Plans:

Std Detail E-121	Standard Sign Placement Conventional Road
Std Detail T-1	Traffic Control General Notes
Std Detail T-10	Conventional Roads Construction Approach Signing
Std Detail T-17	Traffic Control Miscellaneous Details
Std Detail T-24	Traffic Control for Maintenance Pavement Marking Operation
Std Detail T-28	Construction Sign Details
Std Detail T-29	Construction Sign Details
Std Detail T-30	Construction Sign Details
Std Detail T-31	Construction Sign Details
Std Detail T-35	Construction Zone Longitudinal Drop Offs
Std Detail T-36	Construction Zone Longitudinal Drop-Offs for Paving
Std Detail T-45	Square Tube Sign Post and Anchor

5.0 Construction Approach Signing

This section of Camels Hump Road (TH #22) qualifies as a low-volume road as defined in Part 5 of the MUTCD (volume <400 vph and speed <35 mph). The posted speed limit per the Town of Huntington Sign and Traffic Ordinance is 20 mph at the one-lane bridges. MUTCD Chapter 5G outlines the temporary traffic control requirements for low-volume roads.

Long term stationary construction approach signs and locations are shown on the attached Site Specific Traffic Control Plan. Sign materials, posts, and installation will be installed in accordance with VTrans Std Details E-121, T-1, T-10 and T-45.

6.0 Work Zone Limitations

Work Schedule

Work will take place during daylight hours on weekdays. The Engineer will be notified in advance regarding Saturday work. Night-time work is not anticipated in this Project. No work will occur on Sundays or on Holidays.

Special Events

There may be special events that warrant close communication and coordination to reduce conflicts. The Engineer will advise the Contractor of the specifics of each event, and direct the Contractor as to what actions, if any, may be necessary on the Contractor's part to minimize impacts to the traveling public.

Vermont Agency of Transportation
RECEIVED
Huntington BRO 1445(35) TCP Narrative.pdf
CK'D BY D. Peterson OK'D BY C. Carlson
May 4, 2016
RESUBMIT no Approved
BY C. Carlson DATE 05/04/2016

Lane Width
One 10 ft (min.) wide lane will remain open for passage by vehicular traffic at all times. This minimum lane width will remain free of obstructions and obstacles at all times.

Detours and Speed Reductions
There are no detours needed to construct this Project.

On-Street Parking
All construction vehicles (including employee vehicles) shall be parked and materials stored within the designated work zones.

Pedestrian & Bicycle Traffic
There are no designated pedestrian facilities located within the project limits. Occasional bicyclists and pedestrians will travel through the project limits in the same manner as they do presently. Should construction activity be taking place in the roadway, bicyclists will be accommodated in the same manner as vehicular traffic, and pedestrians will be escorted through the work zone.

Schools
School buses are not permitted to travel on Camels Hump Road beyond Bridge No. 32.

Side Road and Driveway Access
The Contractor will maintain safe access to all drives and intersecting side roads at all times during the construction of this Project.

Flaggers and Uniformed Traffic Officers
Should it be necessary to stop traffic during construction, provide certified flaggers and install short-term temporary traffic control signs per MUTCD TA-13 - Temporary Road Closure (including BE PREPARED TO STOP sign. Flaggers will conform to Sections 630 & 641 of the VTrans Standard Specifications for Construction. All short-term temporary traffic control signs shall be covered or removed at the end of each work day.

7.0 Construction Phasing

The Contractor will utilize construction phasing and sequencing of activities that reasonably minimize traffic impacts. The phasing of the traffic control plan will be coordinated with the project schedule. Weekly meetings will be held as required to discuss and resolve issues that may arise.

Phase 1 of this Contract will involve the construction of the new bridge and its approaches. Traffic control measures to be implemented during this phase include:

a) Install all long-term temporary traffic control signs, longitudinal barriers and type iii barricades prior to commencing work.
b) Install short-term temporary traffic control signs and utilize flaggers as necessary during construction of new bridge and approaches.

Vermont Agency of Transportation
RECEIVED
Huntington BRO 1445(35) TCP Narrative.pdf
CK'D BY D. Peterson OK'D BY C. Carlson
May 4, 2016
RESUBMIT no Approved
BY C. Carlson DATE 05/04/2016

Phase 2 of this Contract will involve the removal of the existing bridge and its approaches. Traffic control measures to be implemented during this phase include:

a) Reposition barricades and drums to direct traffic over new bridge.
b) Install short-term temporary traffic control signs and utilize flaggers as necessary during removal of existing bridge and approaches.
c) Reposition longitudinal barriers as work progresses.
d) Remove all longitudinal barriers, Type III barricades and temporary traffic control signs upon completion of work.

Delay Time

All work will be conducted such that traffic delays do not exceed 10 minutes, unless longer periods are authorized by the Resident Engineer.

8.0 Attachments

Huntington BRO 1445(35) Site Specific Traffic Control Plan, Sheet 1
MUTCD TA-13 Temporary Road Closure

Std Detail E-121	Standard Sign Placement Conventional Road
Std Detail T-1	Traffic Control General Notes
Std Detail T-10	Conventional Roads Construction Approach Signing
Std Detail T-30	Construction Sign Details
Std Detail T-35	Construction Zone Longitudinal Drop-Offs
Std Detail T-36	Construction Zone Longitudinal Drop-Offs for Paving
Std Detail T-45	Square Tube Sign Post and Anchor

Vermont Agency of Transportation
RECEIVED
Huntington BRO 1445(35) TCP Narrative.pdf
CK'D BY D. Peterson OK'D BY C. Carlson
May 4, 2016
RESUBMIT no Approved
BY C. Carlson DATE 05/04/2016

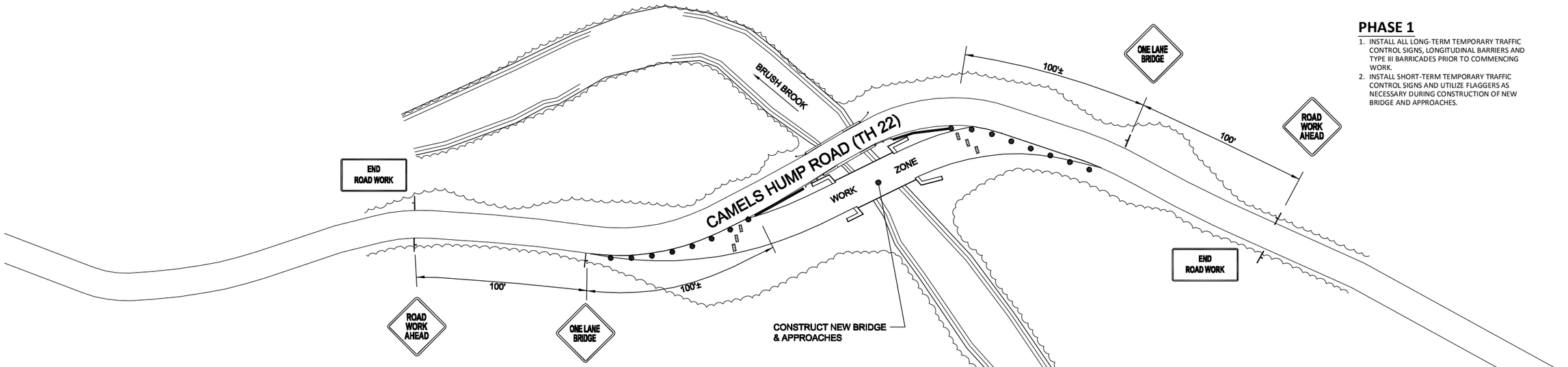

TEMPORARY TRAFFIC CONTROL PLAN - PHASE 1

PHASE 1

1. INSTALL ALL LONG-TERM TEMPORARY TRAFFIC CONTROL SIGNS, LONGITUDINAL BARRIERS AND TYPE III BARRICADES PRIOR TO COMMENCING WORK.
2. INSTALL SHORT-TERM TEMPORARY TRAFFIC CONTROL SIGNS AND UTILIZE FLAGGERS AS NECESSARY DURING CONSTRUCTION OF NEW BRIDGE AND APPROACHES.

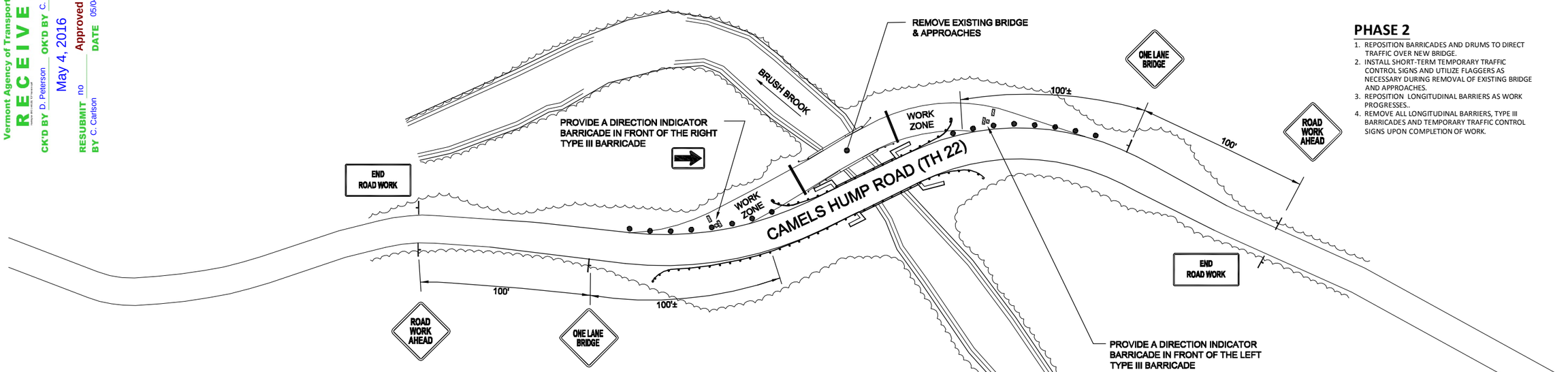

TEMPORARY TRAFFIC CONTROL PLAN - PHASE 2

PHASE 2

1. REPOSITION BARRICADES AND DRUMS TO DIRECT TRAFFIC OVER NEW BRIDGE.
2. INSTALL SHORT-TERM TEMPORARY TRAFFIC CONTROL SIGNS AND UTILIZE FLAGGERS AS NECESSARY DURING REMOVAL OF EXISTING BRIDGE AND APPROACHES.
3. REPOSITION LONGITUDINAL BARRIERS AS WORK PROGRESSES..
4. REMOVE ALL LONGITUDINAL BARRIERS, TYPE III BARRICADES AND TEMPORARY TRAFFIC CONTROL SIGNS UPON COMPLETION OF WORK.

Vermont Agency of Transportation
RECEIVED
CK'D BY D. Peterson OK'D BY C. Carlson
May 4, 2016
RESUBMIT no Approved
BY C. Carlson DATE 05/04/2016

GENERAL NOTES:

1. THIS SECTION OF CAMELS HUMP ROAD (TH #22) QUALIFIES AS A LOW-VOLUME ROAD AS DEFINED IN PART 5 OF THE MUTCD (VOLUME <400 VPH AND SPEED <35 MPH). THE POSTED SPEED LIMIT PER TOWN OF HUNTINGTON SIGN AND TRAFFIC ORDINANCE IS 20 MPH AT THE ONE-LANE BRIDGES. MUTCD CHAPTER 5G OUTLINES THE TEMPORARY TRAFFIC CONTROL REQUIREMENTS FOR LOW-VOLUME ROADS.

2. CHANNELIZING DEVICES (REFLECTORIZED DRUMS OR VERTICAL PANELS (36" MIN. HEIGHT) SHALL BE USED TO CLEARLY DEFINE THE DESIGNATED TRAVEL LANE AND PROVIDE SEPARATION FROM THE ACTIVE WORK ZONE. CHANNELIZING DEVICES SHALL BE SPACED 12 FT ON CENTER. TYPE III BARRICADES SHALL BE PLACED BEHIND THE CHANNELIZING DEVICES FACING ONCOMING TRAFFIC .

3. SHOULD IT BE NECESSARY TO STOP TRAFFIC DURING CONSTRUCTION, PROVIDE FLAGGERS AND INSTALL SHORT-TERM TEMPORARY TRAFFIC CONTROL SIGNS PER MUTCD TA-13 - TEMPORARY ROAD CLOSURE (INCLUDING "BE PREPARED TO STOP" SIGN). THE REQUIRED SIGN SPACING (DIMENSIONS A, B & C) SHALL BE 100 FT. ALL WORK SHALL BE CONDUCTED SUCH THAT TRAFFIC DELAYS DO NOT EXCEED 10 MINUTES, UNLESS LONGER PERIODS ARE AUTHORIZED BY THE RESIDENT ENGINEER. ALL SHORT-TERM TEMPORARY TRAFFIC CONTROL SIGNS SHALL BE COVERED OR REMOVED AT THE END OF EACH WORK DAY.

4. ALL TEMPORARY CONSTRUCTION SIGNS SHALL MEET THE FOLLOWING REQUIREMENTS:

   A. WHERE SIGN INSTALLATIONS ARE NOT PROTECTED BY GUARDRAIL OR OTHER APPROVED TRAFFIC BARRIERS, ALL SIGN STANDS AND POST INSTALLATIONS SHALL MEET NATIONAL COOPERATIVE HIGHWAY RESEARCH PROGRAM (NCHRP) REPORT 350 OR THE AASHTO MANUAL FOR ASSESSING SAFETY HARDWARE (MASH). THE APPROPRIATE RESOURCE SHALL BE DETERMINED AS DESCRIBED IN THE MASH PUBLICATION. NO SIGN POSTS SHALL EXTEND OVER THE TOP OF THE SIGN INSTALLED ON SAID POST(S). WHEN ANCHORS ARE INSTALLED, STUB SHALL NOT BE GREATER THAN 4 INCHES ABOVE EXISTING GROUND.

   B. AS A MINIMUM, ROLL UP SIGN MATERIAL SHALL HAVE ASTM D4956 TYPE VI FLUORESCENT ORANGE RETRO-REFLECTIVE SHEETING.

   C. ALL POST-MOUNTED SIGNS AND SOLID SUBSTRATE PORTABLE SIGNS SHALL HAVE ASTM D4956 TYPE VII, TYPE VIII, OR TYPE IX FLUORESCENT ORANGE RETROREFLECTIVE SHEETING.

   D. ALL RETROREFLECTIVE SHEETING ON TRAFFIC CONES, BARRICADES, AND DRUMS SHALL BE AT A MINIMUM ASTM D4956 TYPE III SHEETING.

   E. ALL STATIONARY SIGNS SHALL BE MOUNTED ON TWO 3 LB/FT FLANGED CHANNEL POSTS OR 2 INCH SQUARE STEEL INSERTED IN 2 INCH GALVANIZED SQUARE STEEL ANCHORS. NO SIGN POSTS SHALL EXTEND OVER THE TOP EDGE OF SIGN INSTALLED ON SAID POSTS.

   F. PRIOR TO PLACING TEMPORARY WORK ZONE SIGNS ON THE PROJECT, THE CONTRACTOR MUST FURNISH FOR THE ENGINEER'S APPROVAL A DETAIL FOR TEMPORARY WORK ZONE SIGNS ON STEEL POSTS SHOWING STUBS PROJECTING A MAXIMUM OF 4 INCHES ABOVE GROUND LEVEL AND BOLTS FOR SIGN POST.

   G. CONSTRUCTION SIGNS SHALL BE INSTALLED SO AS TO NOT INTERFERE WITH NOR OBSTRUCT THE VIEW OF EXISTING TRAFFIC CONTROL DEVICES, STOPPING SIGHT DISTANCES, AND CORNER SIGHT DISTANCES FROM DRIVES AND TOWN HIGHWAYS.

   H. ALL RETROREFLECTIVE SHEETING ON PERMANENT SIGNS (SIGNS TO REMAIN AFTER THE PROJECT IS COMPLETED) SHALL BE AT A MINIMUM ASTM D4956 TYPE III SHEETING, UNLESS OTHERWISE SHOWN ON THE PLANS.

LEGEND

- CHANNELIZATION DRUM
- TYPE III BARRICADE
- LONGITUDINAL BARRIER
- LONG-TERM (STATIONARY) TEMPORARY TRAFFIC CONTROL SIGN
- SHORT-TERM (PORTABLE) TEMPORARY TRAFFIC CONTROL SIGN
- FLAGGER

GRAPHIC SCALE

30 0 15 30 60 120

(IN FEET)
1 inch = 30 ft.

STATE OF VERMONT
ROGER J. DICKINSON
No. 3945
REGISTERED
PROFESSIONAL ENGINEER

5-03-2016	REVISED TRAFFIC CONTROL PLANS & NOTES	RD

Huntington BRO 1445(35)
Bridge 30
Camels Hump Road

TEMPORARY TRAFFIC CONTROL PLAN

Lamoureux & Dickinson
Consulting Engineers, Inc.
14 Morse Drive, Essex, VT 05452
802-878-4450 www.LDengineering.com

Project No.	16036
Survey	-
Design	RD
Drawn	BH
Checked	DG
Date	4-11-16
Scale	1" = 30'
Sheet number	1

P:\2016\16036\dwg\16036-01.dwg, 5/3/2016 4:15:58 PM, 1:2

Notes for Figure 6H-13—Typical Application 13
Temporary Road Closure

Support:

1. Conditions represented are a planned closure not exceeding 20 minutes during the daytime.

Standard:

2. A flagger or uniformed law enforcement officer shall be used for this application. The flagger, if used for this application, shall follow the procedures provided in Sections 6E.07 and 6E.08.

Guidance:

3. The uniformed law enforcement officer, if used for this application, should follow the procedures provided in Sections 6E.07 and 6E.08.

Option:

4. A BE PREPARED TO STOP sign may be added to the sign series.

Guidance:

5. When used, the BE PREPARED TO STOP sign should be located before the Flagger symbol sign.

Figure 6H-13. Temporary Road Closure (TA-13)

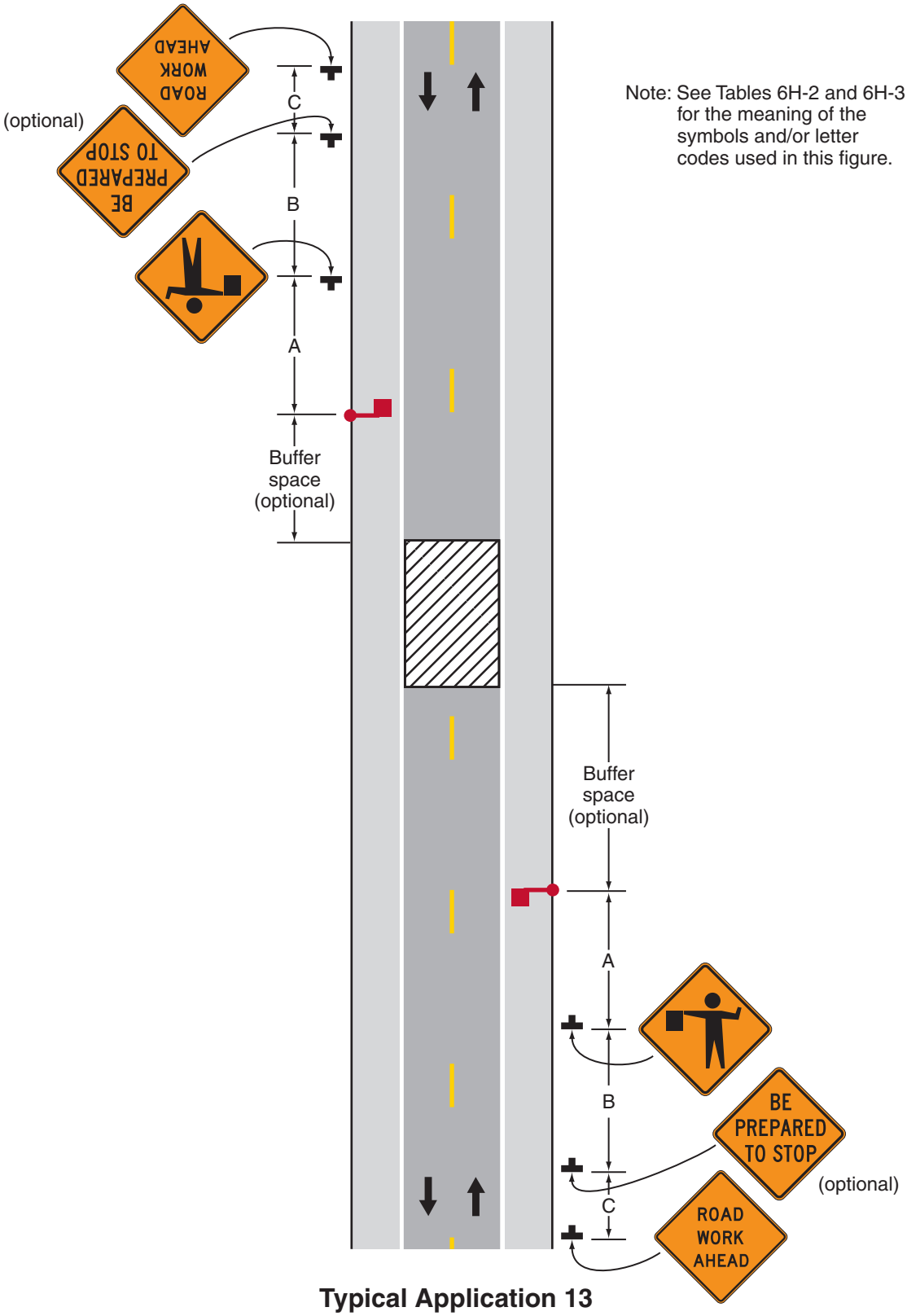

Typical Application 13

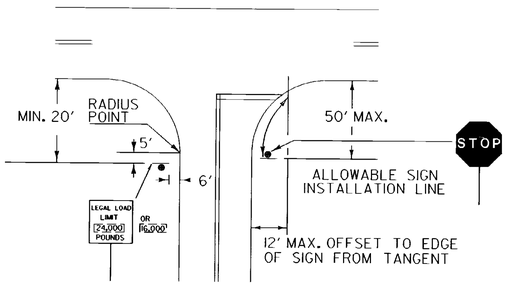

STOP SIGN SHALL BE PLACED ON DRIVERS RIGHT. MAINTAINING MAXIMUM VISIBLITY. CLEARANCE SHALL BE A MINIMUM OF 6' AND A MAXIMUM OF 50' FROM EDGE LINE OF INTERSECTING ROADWAY AND DOES NOT HAVE TO BE ADJACENT TO THE STOP BAR.

LEGAL LOAD LIMIT AND STOP SIGNS AT INTERSECTIONS WITH TOWN HIGHWAYS

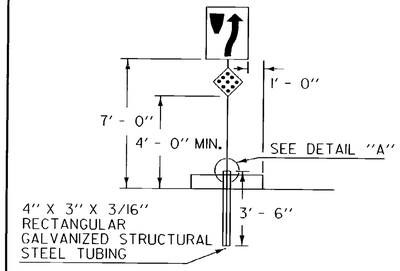

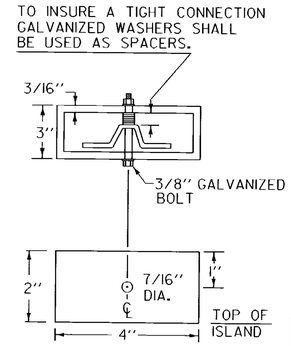

SLEEVE DETAIL "A"

SIGNS ON MEDIAN ISLANDS IN THE LINE OF TRAFFIC

INCREASE VERTICAL CLEARANCE TO 7' IN AREAS OF FREQUENT ROADSIDE PARKING OR PEDESTRIAN ACTIVITY

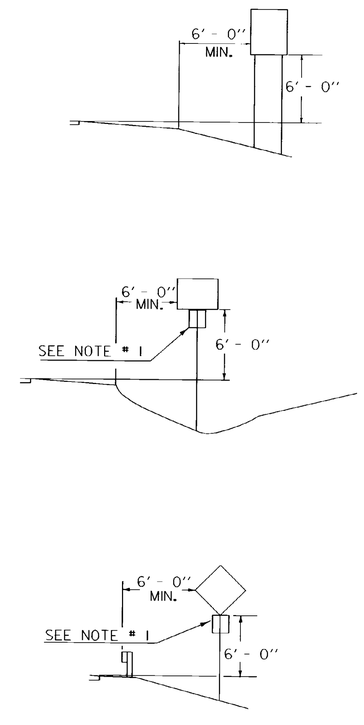

RURAL

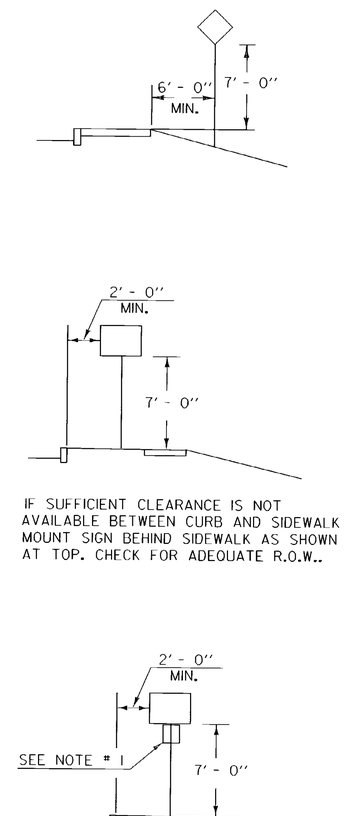

URBAN

NOTES:

1. IN BOTH RURAL AND URBAN LOCATIONS. IF A SECONDARY SIGN IS MOUNTED BELOW ANOTHER SIGN, THE MINIMUM CLEARANCE MAY BE REDUCED BY ONE FOOT.
2. IN RURAL AREAS WITH NO OR MINIMAL SHOULDER, THE LATERAL CLEARANCE TO THE EDGE OF A SIGN SHOULD BE A MINIMUM OF 12' FROM THE EDGE OF THE TRAVELED WAY.
3. ALSO SEE OTHER STANDARD SHEETS FOR MOUNTING CLEARANCE AND SPACING OF DESTINATION AND ROUTE MARKER ASSEMBLIES AND TOWN LINE SIGNS.

POST REFERENCE:

REFER TO THE DETAILS ON THE APPROPRIATE STANDARD DRAWING FOR INFORMATION CONCERNING THE PROPER MOUNTING OF SIGNS ON APPROPRIATE POSTS.

OTHER STDS. REQUIRED: E-160 E-161 E-162 E-163 E-164

REVISIONS AND CORRECTIONS

JAN. 23, 1995 - DATE OF ORIGINAL ISSUE

AUG. 08, 1995 - VARIOUS MINOR NOTE REVISIONS

APPROVED FOR THIS PROJECT AND/OR DESIGN IMPLEMENTATION. FHWA FINAL APPROVAL PENDING.

APPROVED

DIRECTOR OF ENGINFERING

TRAFFIC AND SAFETY ENGINEER

STANDARD SIGN PLACEMENT CONVENTIONAL ROAD

/traf/std/stdel21.dgn : stdel21.i

VERMONT AGENCY OF TRANSPORTATION

STANDARD

E-121

1. TRAFFIC CONTROL DEVICES NOT DETAILED IN THE VERMONT AGENCY OF TRANSPORTATION (VAOT) ''STANDARD DRAWINGS'' OR THE PROJECT PLANS SHALL BE IN ACCORDANCE WITH THE "MANUAL ON TRAFFIC CONTROL DEVICES" (MUTCD) AND THE ''STANDARD HIGHWAY SIGNS AND MARKINGS'' BOOK (SHSM) PUBLISHED BY THE FEDERAL HIGHWAY ADMINISTRATION (FHWA).

2. CONSTRUCTION SIGNS SHALL BE ERECTED BEFORE THE START OF ANY WORK AND SHALL BE COVERED UNTIL WORK COMMENCES, DURING PERIODS OF INACTIVITY OR UPON COMPLETION OF THE WORK. EACH SIGN SHALL BE ERECTED IN A NEAT AND WORKMANLIKE MANNER.

3. CONSTRUCTION SIGN COVERS SHALL CONSIST OF A PANEL, PAINTED FLAT BLACK, THE SAME SIZE AS THE SIGN IT COVERS. THE PANEL SHALL BE OF WOOD, PLYWOOD, HARDBOARD OR ANY MATERIAL SATISFACTORY TO THE ENGINEER. NO MATERIAL WILL BE APPROVED THAT WILL DETERIORATE BY EXPOSURE TO THE WEATHER DURING THE PROJECT. MOUNTING OF THE PANEL SHALL BE DONE IN SUCH A WAY AS NOT TO DAMAGE THE SIGN FACE MATERIAL.

4. SIGNS SHALL BE MAINTAINED IN A CLEAN AND LEGIBLE CONDITION SATISFACTORY TO THE ENGINEER. THEY SHALL BE KEPT PLUMB AND LEVEL, AND ALWAYS PRESENT A NEAT APPEARANCE. DAMAGED, DEFACED OR DIRTY SIGNS SHALL BE REPAIRED, CLEANED OR REPLACED AS ORDERED BY THE ENGINEER.

5. NO CROSS-BRACING OR BACK-BRACING TO KEEP POSTS PLUMB WILL BE ALLOWED. CONCRETE FOUNDATIONS, COLLARS OR SOIL BEARING PLATES ARE NOT PERMITTED. CONSTRUCTION SIGNS SHALL BE PLACED ON TWO POSTS.

6. CONSTRUCTION SIGNS INSTALLED ON POSTS SHALL BE SET SECURELY IN THE GROUND. THE BOTTOM OF A SIGN SHALL BE AT LEAST FIVE FEET ABOVE THE EDGE OF PAVEMENT AND THE NEAREST EDGE OF A SIGN SHALL BE AT LEAST SIX FEET OUTSIDE THE SHOULDER POINT, FOUR FEET OUTSIDE GUARDRAIL, OR TWO FEET OUTSIDE CURBING OR SIDEWALK. THE INSTALLATION OF SIGNS SHALL BE SUBJECT TO APPROVAL OF THE ENGINEER. IN URBAN AREAS, THE BOTTOM OF THE SIGN SHALL BE AT LEAST SEVEN FEET ABOVE THE SIDEWALK OR EDGE OF PAVEMENT, WHICHEVER IS HIGHER.

7. PORTABLE SIGNS SHALL BE PLACED ON THE EDGE OF ROADWAY AND A MINIMUM OF ONE FOOT ABOVE THE TRAVELED WAY. ALL VEGETATION THAT INTERFERES WITH VISIBILITY OF THE SIGNS SHALL BE REMOVED. WHEN PLACED BEHIND GUARDRAIL, THE BOTTOM OF THE SIGN FACE SHALL BE ABOVE THE TOP OF THE GUARDRAIL.

8. SIGNS SHALL BE REMOVED UPON COMPLETION OF THE WORK AT THE DISCRETION OF THE ENGINEER.

9. ROLL UP CONSTRUCTION SIGNS SHALL HAVE RETROREFLECTIVE SHEETING EQUAL TO OR EXCEEDING THE "AMERICAN ASSOCIATION OF STATE HIGHWAY AND TRANSPORTATION OFFICIALS" (AASHTO) M 268 ["AMERICAN SOCIETY FOR TESTING AND MATERIALS" (ASTM) D 4956] TYPE VI AND TYPE VII UNLESS OTHERWISE NOTED.

10. SOLID SUBSTRATE CONSTRUCTION SIGNS SHALL HAVE RETROREFLECTIVE SHEETING EQUAL TO OR EXCEEDING THE "AMERICAN ASSOCIATION OF STATE HIGHWAY AND TRANSPORTATION OFFICIALS" (AASHTO) M 268 ["AMERICAN SOCIETY FOR TESTING AND MATERIALS" (ASTM) D 4956] TYPE VIII OR IX REQUIREMENTS UNLESS OTHERWISE NOTED.

11. WHERE CONSTRUCTION SIGN INSTALLATIONS ARE NOT PROTECTED BY GUARDRAIL OR OTHER APPROVED TRAFFIC BARRIERS, ALL SIGN STANDS AND POST INSTALLATIONS SHALL MEET "NATIONAL COOPERATIVE HIGHWAY RESEARCH PROGRAM" (NCHRP) REPORT 350 OR THE AASHTO "MANUAL FOR ASSESSING SAFETY HARDWARE" (MASH). THE APPROPRIATE RESOURCE SHALL BE DETERMINED AS DESCRIBED IN THE MASH PUBLICATION. NO SIGN POSTS SHALL EXTEND OVER THE TOP OF THE SIGN INSTALLED ON SAID POSTS. WHEN ANCHORS ARE INSTALLED, STUBS SHALL NOT BE GREATER THAN FOUR INCHES ABOVE EXISTING GROUND.

12. ROADWAY AND SHOULDER WIDTHS DEPICTED ON THE STANDARD DRAWINGS MAY VARY.

13. THESE STANDARD DRAWINGS ARE INTENDED TO SERVE AS VTRANS STANDARD OPERATING PROCEDURE. IT IS NOTED THAT COMPONENT PARTS OF A TEMPORARY TRAFFIC CONTROL WORK ZONE MAY BE MODIFIED DUE TO FIELD CONDITIONS, AT THE DISCRETION OF THE ENGINEER.

OTHER STDS. REQUIRED: **NONE**

REVISIONS AND CORRECTIONS

AUG. 6, 2012 - ORIGINAL APPROVAL DATE

APPROVED

HIGHWAY SAFETY & DESIGN ENGINEER

DIRECTOR OF PROGRAM DEVELOPMENT

Mark D. Richter

FEDERAL HIGHWAY ADMINISTRATION

TRAFFIC CONTROL GENERAL NOTES

VERMONT AGENCY OF TRANSPORTATION

STANDARD

T-1

LEGEND

(A) ROAD WORK AHEAD — W20-1

(B) ROAD WORK 500 FT — W20-1

(C) SIDE ROAD WORK AHEAD — VC-869

(D) SIDE ROAD WORK 500 FT — VC-869

(E) SIDE ROAD WORK LEFT — VC-869

(F) SIDE ROAD WORK RIGHT — VC-869

(G) ROAD WORK NEXT XX MILES — G20-1

(H) END ROAD WORK — G20-2

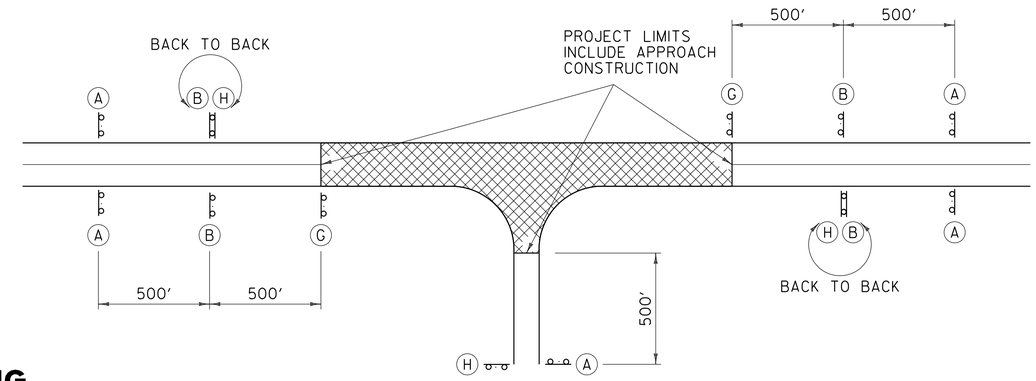

TYPICAL APPROACH SIGNING

FIELD CONDITIONS MAY DICTATE THE ACTUAL PLACEMENT.

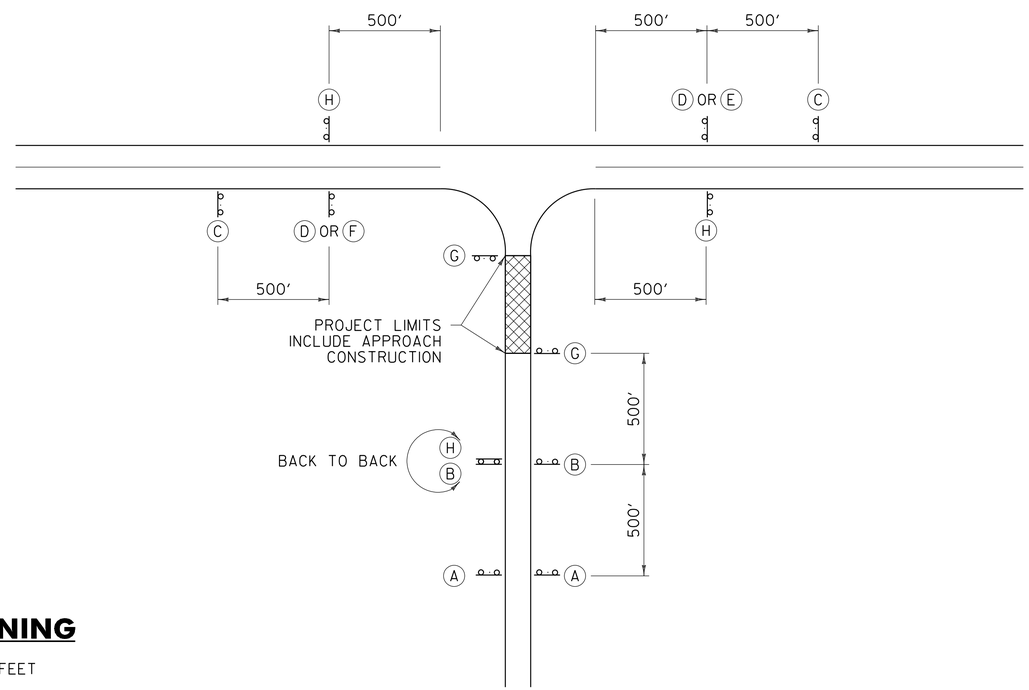

SIDE ROAD APPROACH SIGNING

TO BE USED WHEN CONSTRUCTION IS UP TO 1000 FEET FROM THE INTERSECTION. FIELD CONDITIONS MAY DICTATE THE ACTUAL PLACEMENT.

GENERAL NOTES:

1. SIGNS SHOWN ON THIS SHEET ARE INTENDED FOR USE IN PROVIDING ADVANCE WARNING AND INFORMATION ON CONSTRUCTION PROJECTS OVER WHICH TRAFFIC WILL BE MAINTAINED. WHEN ADDITIONAL APPROACH SIGNS OR OTHER TYPES OF ADVANCE SIGNING OR CONTROL ARE NECESSARY, THE PLANS AND/OR THE SPECIFICATIONS FOR THAT PROJECT WILL GIVE THE DETAILS OF THE SIGNS AND DEVICES REQUIRED. FOR ON-PROJECT CONSTRUCTION SIGNS, REFER TO APPROPRIATE STANDARD SHEETS.
2. THE "ROAD WORK NEXT XX MILES" SIGN (G20-1) SHALL BE INSTALLED IN ADVANCE OF TEMPORARY TRAFFIC CONTROL ZONES THAT ARE MORE THAN TWO MILES IN LENGTH OR AS DIRECTED BY THE ENGINEER. DISTANCES SHALL BE STATED TO THE NEAREST WHOLE MILE.
3. SIGNS SHALL BE LOCATED AS DETAILED ON THIS SHEET OR AS OTHERWISE SHOWN ON THE PLANS. THEY SHALL APPEAR AT EACH END OF THE HIGHWAY UNDER CONSTRUCTION AND ON ALL INTERSECTING PUBLIC HIGHWAYS. THE ENGINEER SHALL DETERMINE THE EXACT LOCATIONS.

OTHER STDS. REQUIRED: **T–1, T–28**

REVISIONS AND CORRECTIONS

AUG. 6, 2012 - ORIGINAL APPROVAL DATE

APPROVED

HIGHWAY SAFETY & DESIGN ENGINEER

DIRECTOR OF PROGRAM DEVELOPMENT

Mark D. Richter

FEDERAL HIGHWAY ADMINISTRATION

CONVENTIONAL ROADS CONSTRUCTION APPROACH SIGNING

VERMONT AGENCY OF TRANSPORTATION

STANDARD

T-10

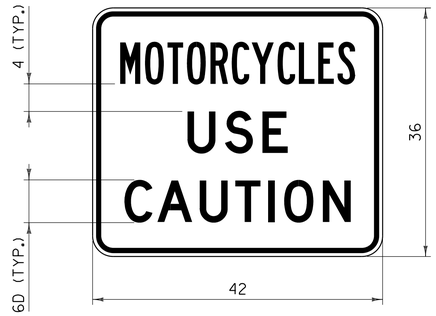

VC–004P

NOTES:

1. CORNERS SHALL BE ROUNDED TO A THREE INCH RADIUS.
2. THE BORDER SHALL BE ¾ INCH WIDE WITH A ½ INCH INDENT FROM THE EDGE OF THE SIGN.
3. "MOTORCYCLES" SHALL HAVE A SPECIFIED WIDTH OF 34 INCHES.
4. "USE" SHALL HAVE A SPECIFIED WIDTH OF 14 ½ INCHES.
5. "CAUTION" SHALL HAVE A SPECIFIED WIDTH OF 32 ¾ INCHES.
6. SIGN SHALL ONLY BE INSTALLED AS A SUPPLEMENTAL TO A PARENT WARNING SIGN AND SHALL NOT BE INSTALLED BY ITSELF.

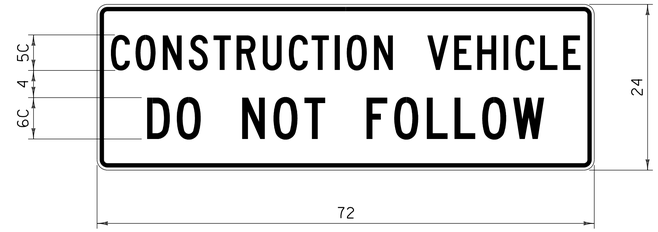

VC–007

NOTES:

1. CORNERS SHALL BE ROUNDED TO A 1½ INCH RADIUS.
2. THE BORDER SHALL BE ⅝ INCH WIDE WITH A ⅜ INCH INDENT FROM THE EDGE OF THE SIGN.
3. "CONSTRUCTION VEHICLE" SHALL HAVE A SPECIFIED WIDTH OF 68 INCHES.
4. "DO NOT FOLLOW" SHALL HAVE A SPECIFIED WIDTH OF 57 ½ INCHES.
5. SIGN SHALL BE MOUNTED IN A CONSPICUOUS LOCATION ON THE REAR OF THE CONSTRUCTION VEHICLE.
6. THE SIGN SHALL BE MOUNTED AS NOT TO INTERFERE WITH THE VISIBILITY OF DIRECTIONAL SIGNALS OR TAIL LIGHTS AS REQUIRED BY LAW.
7. SIGN SHALL BE COVERED OR REMOVED WHEN NOT IN USE.

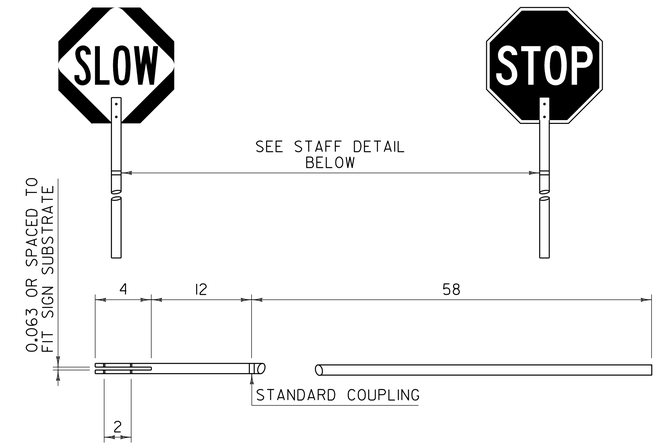

STOP–SLOW PADDLE & STAFF DETAIL

NOTES:

1. REFER TO THE "STANDARD HIGHWAY SIGNS AND MARKINGS" BOOK (SHSM) "TEMPORARY TRAFFIC CONTROL - WARNING SIGNS" FOR THE STOP-SLOW PADDLE DESIGN.
2. COLORS FOR THE SLOW SIDE OF THE PADDLE SHALL BE BLACK LEGEND AND BORDER ON A FLUORESCENT ORANGE DIAMOND WITH RETROREFLECTIVE SHEETING EQUAL TO OR EXCEEDING AASHTO M 268 [ASTM D 4956] TYPE VII, VIII OR IX REQUIREMENTS.
3. COLORS FOR THE STOP SIDE OF THE PADDLE SHALL BE WHITE RETROREFLECTIVE LEGEND AND BORDER ON A RED RETROREFLECTIVE OCTAGON. BOTH COLORS SHALL HAVE RETROREFLECTIVE SHEETING EQUAL TO OR EXCEEDING AASHTO M 268 [ASTM D 4956] TYPE III.
4. SIGN SUBSTRATE MATERIALS SHALL BE ALUMINUM, ACRYLONITRILE BUTADIENE STYRENE (ABS) PLASTIC OR EQUIVALENT.
5. THE STAFF MAY BE RIGID ABS PLASTIC OR WOOD WITH A ONE TO 1½ INCH DIAMETER.
6. SIGNS SHALL BE MAINTAINED IN A CLEAN AND LEGIBLE CONDITION SATISFACTORY TO THE ENGINEER. THEY SHALL BE COMPLETELY VISIBLE TO APPROACHING TRAFFIC AT ALL TIMES. THEY SHALL BE KEPT PLUMB AND LEVEL, AND ALWAYS PRESENT A NEAT APPEARANCE. DAMAGED, DEFACED OR DIRTY SIGNS SHALL BE REPAIRED, CLEANED OR REPLACED AS ORDERED BY THE ENGINEER.

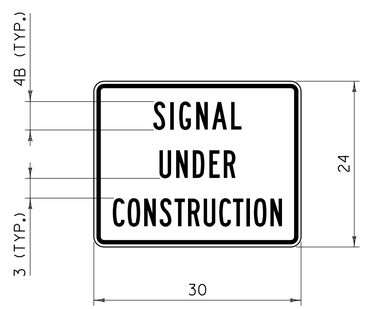

VC–820

NOTES:

1. CORNERS SHALL BE ROUNDED TO A 1½ INCH RADIUS.
2. THE BORDER SHALL BE ⅝ INCH WIDE WITH A ⅜ INCH INDENT FROM THE EDGE OF THE SIGN.
3. "SIGNAL" SHALL HAVE A SPECIFIED WIDTH OF 12 ¾ INCHES.
4. "UNDER" SHALL HAVE A SPECIFIED WIDTH OF 11 INCHES.
5. "CONSTRUCTION" SHALL HAVE A SPECIFIED WIDTH OF 24 ½ INCHES.
6. SIGN SHALL ONLY BE INSTALLED AS A SUPPLEMENTAL TO A PARENT WARNING SIGN AND SHALL NOT BE INSTALLED BY ITSELF.

GENERAL NOTES:

1. ALL LEGEND SHALL BE CENTERED VERTICALLY AND HORIZONTALLY UNLESS OTHERWISE NOTED.
2. COLORS FOR SIGNS SHALL BE BLACK LEGEND AND BORDER ON FLUORESCENT ORANGE BACKGROUND UNLESS OTHERWISE NOTED.
3. ALL DIMENSIONS IN INCHES.

OTHER STDS. REQUIRED: **T–1**

REVISIONS AND CORRECTIONS

AUG. 6, 2012 - ORIGINAL APPROVAL DATE

APPROVED

HIGHWAY SAFETY & DESIGN ENGINEER

DIRECTOR OF PROGRAM DEVELOPMENT

Mark D. Richter

FEDERAL HIGHWAY ADMINISTRATION

CONSTRUCTION SIGN DETAILS

VERMONT AGENCY OF TRANSPORTATION

STANDARD

T-30

DROP-OFF ADJACENT TO TRAVELED WAY

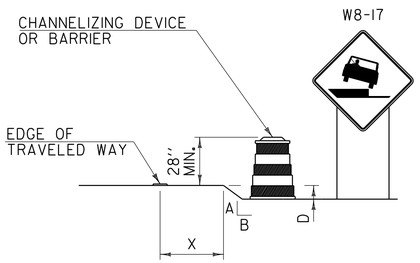

TYPE 1

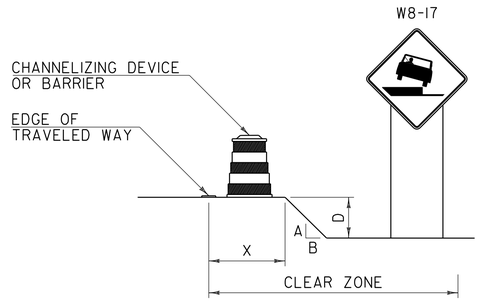

TYPE 2

NOTES:

1. CHANNELIZING DEVICES OR BARRIER SHOULD BE PLACED TO MAXIMIZE THE WIDTH OF THE TRAVELED WAY.
2. SEE CHART "A" FOR SPECIFIC REQUIREMENTS.
3. IF THE DROP-OFF REQUIRES CHANNELIZING DEVICES TO REMAIN IN PLACE OVERNIGHT, THEN "SHOULDER DROP-OFF SYMBOL" (W8-17) SIGNS SHOULD BE INSTALLED.

DROP-OFF BETWEEN ADJACENT TRAVELED LANES

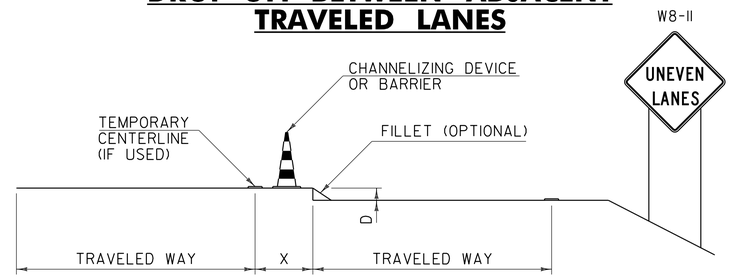

NOTES:

1. WHENEVER A LONGITUDINAL DROP-OFF BETWEEN ADJACENT TRAVELED LANES IS TO BE LEFT OVERNIGHT, THEN "UNEVEN LANES" (W8-11) SIGNS AND CHANNELIZING DEVICES SHOULD BE INSTALLED.
2. IF REQUIRED, THE CHANNELIZING DEVICES USED SHOULD BE THOSE WHICH MAXIMIZE THE WIDTH OF THE TRAVELED LANE (I.E. CONES, VERTICAL PANELS OR TUBULAR MARKERS).
3. A BITUMINOUS CONCRETE FILLET WITH A 1.5:1 SLOPE MAY BE USED IN PLACE OF CHANNELIZING DEVICES, HOWEVER THE "UNEVEN LANES" (W8-11) SIGNS SHOULD STILL BE INSTALLED.
4. SEE CHART "A" FOR SPECIFIC REQUIREMENTS.

DROP-OFF BEYOND SHOULDER OR CURB

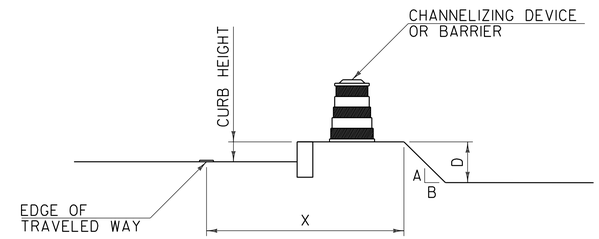

NOTES:

1. USE CHART "A" FOR VERTICAL CURBS UNDER SIX INCHES, MOUNTABLE CURBS OR ROADWAYS WITH A POSTED SPEED ABOVE 40 MPH.
2. USE CHART "B" FOR VERTICAL CURBS SIX INCHES OR GREATER.

CHART "A"
ALL SPEEDS WITH NO CURB OR MOUNTABLE CURB

X (FEET)	DROP (D) (INCHES)	A:B SLOPE	RECOMMENDED DEVICE
0 TO 4'	LESS THAN 2"	ANY	NONE
	2" TO 6"	1:1.5 OR FLATTER	NONE
		STEEPER THAN 1:1.5	CHANNELIZING DEVICE
	GREATER THAN 6"	1:3 OR FLATTER	NONE
		STEEPER THAN 1:3	BARRIER
4' TO 10'	LESS THAN 6"	ANY	NONE
	6" TO 12"	1:3 OR FLATTER	NONE
		STEEPER THAN 1:3	BARRIER
	GREATER THAN 12"	1:3 OR FLATTER	NONE
		STEEPER THAN 1:3	BARRIER
10' TO CZ	LESS THAN OR EQUAL TO 12"	ANY	NONE
	GREATER THAN 12"	1:3 OR FLATTER	NONE
		STEEPER THAN 1:3	BARRIER

NOTES:

1. THE MINIMUM CLEAR ZONE FOR FREEWAYS IS TO BE DETERMINED PER THE CURRENT AASHTO ROADSIDE DESIGN GUIDE. ALL OTHER HIGHWAYS WILL BE DETERMINED PER THE CURRENT "VERMONT STATE STANDARDS" BOOK.
2. CHANNELIZING DEVICES MAY BE USED INSTEAD OF BARRIER FOR SHORT TERM OPERATIONS.
3. ON BORDERLINE CONDITIONS, THE ENGINEER SHOULD DETERMINE WHICH TREATMENT IS ADEQUATE FOR THE EXISTING CONDITIONS.

CHART "B"
40 MPH OR LESS WITH VERTICAL CURB

X (FEET)	DROP (D) (INCHES)	DEVICE REQUIRED
0-10'	LESS THAN OR EQUAL TO 12"	NONE
0-10'	GREATER THAN 12"	CHANNELIZING DEVICE
GREATER THAN 10'	ANY	NONE

GENERAL NOTES:

1. THESE CONDITIONS AND TREATMENTS ARE ONLY PART OF THE TRAFFIC CONTROL SYSTEM AND SHOULD BE USED IN ADDITION TO THE PROPER WORK ZONE SIGNING.
2. THE FOLLOWING ARE "MANUAL ON UNIFORM TRAFFIC CONTROL DEVICES" (MUTCD) COMPLIANT CHANNELIZING DEVICES:

   A. VERTICAL PANEL
   B. TYPE I OR TYPE II BARRICADE
   C. PLASTIC DRUM
   D. CONE - WHERE APPLICABLE
   E. TUBULAR MARKERS

   IF CHANNELIZING DEVICES ARE REQUIRED TO STAY IN PLACE DURING NIGHTTIME HOURS, THEY SHALL BE STABILIZED WHILE UNATTENDED IN ACCORDANCE WITH THE MUTCD.
3. WHERE BARRIER IS NECESSARY, THE BARRIER SHALL BE TAPERED BEYOND THE CLEAR ZONE. WHEN THE BARRIER CANNOT BE TAPERED BEYOND THE CLEAR ZONE, A MUTCD COMPLIANT END TREATMENT SHALL BE USED. BARRIER AND END TREATMENT SHALL MEET "NATIONAL COOPERATIVE HIGHWAY RESEARCH PROGRAM" (NCHRP) REPORT 350 OR THE "AMERICAN ASSOCIATION OF STATE HIGHWAY AND TRANSPORTATION OFFICIALS" (AASHTO) "MANUAL FOR ASSESSING SAFETY HARDWARE" (MASH). THE APPROPRIATE RESOURCE SHALL BE DETERMINED AS DESCRIBED IN THE MASH PUBLICATION.
4. CHANNELIZING DEVICE SPACING ALONG A LONGITUDINAL DROP-OFF (TANGENT) SHALL BE AS FOLLOWS:

   TANGENT - CHANNELIZING DEVICES SHALL BE SPACED "2S" ("S" IS EQUAL TO THE POSTED SPEED LIMIT IN FEET) APART.
5. "LOW SHOULDER" (W8-9) AND "SHOULDER DROP-OFF SYMBOL" (W8-17) SIGNS, WHEN USED, SHOULD BEGIN PRIOR TO THE DROP-OFF CONDITION AND SHOULD BE REPEATED EVERY 1500 FEET.

OTHER STDS. REQUIRED: **T-1**

REVISIONS AND CORRECTIONS

AUG. 6, 2012 - ORIGINAL APPROVAL DATE

APPROVED

HIGHWAY SAFETY & DESIGN ENGINEER

DIRECTOR OF PROGRAM DEVELOPMENT

Mark D. Richter

FEDERAL HIGHWAY ADMINISTRATION

CONSTRUCTION ZONE LONGITUDINAL DROP-OFFS

VERMONT AGENCY OF TRANSPORTATION

STANDARD

T-35

DROP-OFF ADJACENT TO TRAVELED WAY

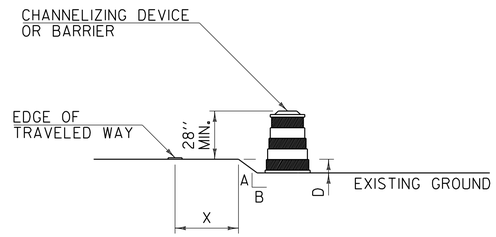

NOTES:

1. CHANNELIZING DEVICES SHOULD BE PLACED TO MAXIMIZE THE WIDTH OF THE TRAVELED WAY.
2. SEE CHART "A" FOR SPECIFIC REQUIREMENTS.
3. IF THE DROP-OFF REQUIRES CHANNELIZING DEVICES TO REMAIN IN PLACE OVERNIGHT, THEN "LOW SHOULDER" (W8-9) OR "SHOULDER DROP-OFF SYMBOL" (W8-17) SIGNS SHOULD BE INSTALLED.

DROP-OFF BETWEEN ADJACENT TRAVELED LANES

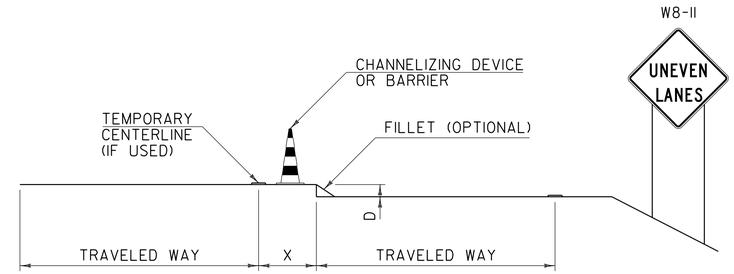

NOTES:

1. WHENEVER A LONGITUDINAL DROP-OFF BETWEEN ADJACENT TRAVELED LANES IS TO BE LEFT OVERNIGHT, THEN "UNEVEN LANES" (W8-11) SIGNS AND CHANNELIZING DEVICES SHOULD BE INSTALLED.
2. IF REQUIRED, THE CHANNELIZING DEVICES USED SHALL BE THOSE WHICH MAXIMIZE THE WIDTH OF THE TRAVELED LANE (I.E. CONES, VERTICAL PANELS OR TUBULAR MARKERS).
3. A BITUMINOUS CONCRETE FILLET WITH A 1.5:1 SLOPE MAY BE USED IN PLACE OF CHANNELIZING DEVICES, HOWEVER THE "UNEVEN LANES" (W8-11) SIGNS SHOULD STILL BE INSTALLED.
4. SEE CHART "A" FOR SPECIFIC REQUIREMENTS.

CHART "A"
ALL SPEEDS WITH NO CURB

X (FEET)	DROP (D) (INCHES)	A:B SLOPE	DEVICE REQUIRED
0 TO 4'	LESS THAN 2"	ANY	NONE
	2" TO 6"	1:1.5 OR FLATTER	NONE
		STEEPER THAN 1:1.5	CHANNELIZING DEVICE
	GREATER THAN 6"	1:3 OR FLATTER	NONE
		STEEPER THAN 1:3	BARRIER
4' TO 10'	LESS THAN 6"	ANY	NONE
	6" TO 12"	1:3 OR FLATTER	NONE
		STEEPER THAN 1:3	BARRIER

NOTE:

1. ON BORDERLINE CONDITIONS, THE ENGINEER SHOULD DETERMINE WHICH TREATMENT IS ADEQUATE FOR THE EXISTING CONDITIONS.

GENERAL NOTES:

1. THESE CONDITIONS AND TREATMENTS ARE ONLY PART OF THE TRAFFIC CONTROL SYSTEM AND SHOULD BE USED IN ADDITION TO THE PROPER WORK ZONE SIGNING.
2. THE FOLLOWING ARE "MANUAL ON UNIFORM TRAFFIC CONTROL DEVICES" (MUTCD) COMPLIANT CHANNELIZING DEVICES:

   A. VERTICAL PANEL
   B. TYPE I OR TYPE II BARRICADE
   C. PLASTIC DRUM
   D. CONE - WHERE APPLICABLE
   E. TUBULAR MARKERS

   IF CHANNELIZING DEVICES ARE REQUIRED TO STAY IN PLACE DURING NIGHTTIME HOURS, THEY SHALL BE STABILIZED WHILE UNATTENDED IN ACCORDANCE WITH THE MUTCD.
3. WHERE BARRIER IS NECESSARY, THE BARRIER SHALL BE TAPERED BEYOND THE CLEAR ZONE. WHEN THE BARRIER CANNOT BE TAPERED BEYOND THE CLEAR ZONE, A MUTCD COMPLIANT END TREATMENT SHALL BE USED. BARRIER AND END TREATMENT SHALL MEET "NATIONAL COOPERATIVE HIGHWAY RESEARCH PROGRAM" (NCHRP) REPORT 350 OR THE "AMERICAN ASSOCIATION OF STATE HIGHWAY AND TRANSPORTATION OFFICIALS" (AASHTO) "MANUAL FOR ASSESSING SAFETY HARDWARE" (MASH). THE APPROPRIATE RESOURCE SHALL BE DETERMINED AS DESCRIBED IN THE MASH PUBLICATION.
4. CHANNELIZING DEVICE SPACING ALONG A LONGITUDINAL DROP-OFF (TANGENT) SHALL BE AS FOLLOWS:

   TANGENT - CHANNELIZING DEVICES SHALL BE SPACED "2S" ("S" IS EQUAL TO THE POSTED SPEED LIMIT IN FEET) APART.
5. "LOW SHOULDER" (W8-9) AND "SHOULDER DROP-OFF SYMBOL" (W8-17) SIGNS, WHEN USED, SHOULD BEGIN PRIOR TO THE DROP-OFF CONDITION AND SHOULD BE REPEATED EVERY 1500 FEET.

OTHER STDS. REQUIRED: T-1

REVISIONS AND CORRECTIONS

AUG. 6, 2012 - ORIGINAL APPROVAL DATE

APPROVED

HIGHWAY SAFETY & DESIGN ENGINEER

DIRECTOR OF PROGRAM DEVELOPMENT

Mark D. Richter

FEDERAL HIGHWAY ADMINISTRATION

CONSTRUCTION ZONE LONGITUDINAL DROP-OFFS FOR PAVING

VERMONT AGENCY OF TRANSPORTATION

STANDARD

T-36

POST AND ANCHOR SELECTION CHART

POST SIZE (IN.)	POST THICKNESS (IN.)	POST WEIGHT (LBS/FT.)	POST GAGE	SECTION MODULUS ($IN.^3$)	ONE POST SV	TWO POST SV	THREE POST SV	POSTS PERMITTED IN 8' PATH	ANCHOR SIZE (IN.)	ANCHOR GAGE	MINIMUM ANCHOR LENGTH
1.75	.083	1.88	14	0.222	45	90	135	TWO	2.00	12	30
2.00	.109	2.42	12	0.393	80	160	240	TWO	2.25	12	48
2.50	.109	3.35	12	0.673	137	274	411	ONE	3.00	7	48

NOTES:

1. ALL SIGN POSTS SHALL HAVE 7/16 INCH HOLES EVERY ONE INCH ON CENTER (ALL FOUR SIDES).
2. THE NUMBER OF SIGN POSTS PERMITTED WITHIN AN EIGHT FOOT PATH ASSUMES THAT THE SIGN ASSEMBLY IS NOT PROTECTED BY GUARDRAIL OR IS LOCATED WITHIN A GUARDRAIL'S DEFLECTION DISTANCE DETERMINED PER THE CURRENT "AMERICAN ASSOCIATION OF STATE HIGHWAY AND TRANSPORTATION OFFICIALS" (AASHTO) ROADSIDE DESIGN GUIDE. ADDITIONAL POSTS MAY BE INSTALLED USING SLIP BASES THAT MEET "NATIONAL COOPERATIVE HIGHWAY RESEARCH PROGRAM" (NCHRP) REPORT 350 OR THE AASHTO "MANUAL FOR ASSESSING SAFETY HARDWARE" (MASH). THE APPROPRIATE RESOURCE SHALL BE DETERMINED AS DESCRIBED IN THE MASH PUBLICATION.
3. TO USE THE SELECTION VALUE (SV) COLUMNS IN THE TABLE ABOVE, MULTIPLY A SIGN'S SURFACE AREA IN SQUARE FEET (H x L) BY THE SIGN'S HEIGHT IN FEET MEASURED FROM THE GROUND TO THE CENTROID OF THE SIGN ASSEMBLY (h). THIS RESULT MUST BE LESS THAN OR EQUAL TO THE CORRESPONDING SELECTION VALUE. NOTE THAT FOR SIGNS WITH MULTIPLE POSTS, THE LARGEST HEIGHT DIMENSION SHALL BE USED TO CALCULATE THE POST SELECTION VALUE.
4. THE DESIGN CRITERIA UTILIZED IN SIGN POST AND ANCHOR SELECTION IS AS FOLLOWS: WIND SPEED OF 70 MPH (10 YEAR MEAN RECURRENCE INTERVAL), WIND PRESSURE OF 19 PSF, STEEL MINIMUM YIELD OF 55,000 PSI, AND AN ALLOWABLE STRESS OF 1.4 (0.60 FY).

CORNER BOLT INSTALLATION DETAIL

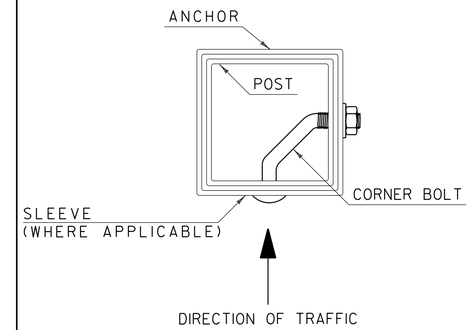

NOTES:

1. CORNER BOLTS SHALL BE 5/16 INCH DIAMETER WITH 18 THREADS PER INCH AND DIMENSIONS SHALL BE DETERMINED BASED ON THE OUTERMOST DIMENSION OF THE SLEEVE, ANCHOR OR POST. THREAD EXPOSURE MUST EXCEED THE CORRESPONDING NUT WIDTH. THE CORNER BOLT AND CORRESPONDING HARDWARE SHALL BE ZINC PLATED, MEETING OR EXCEEDING THE REQUIREMENTS OF THE "AMERICAN SOCIETY FOR TESTING AND MATERIALS" (ASTM) A307.

SLEEVE /ANCHOR INSTALLATION DETAIL

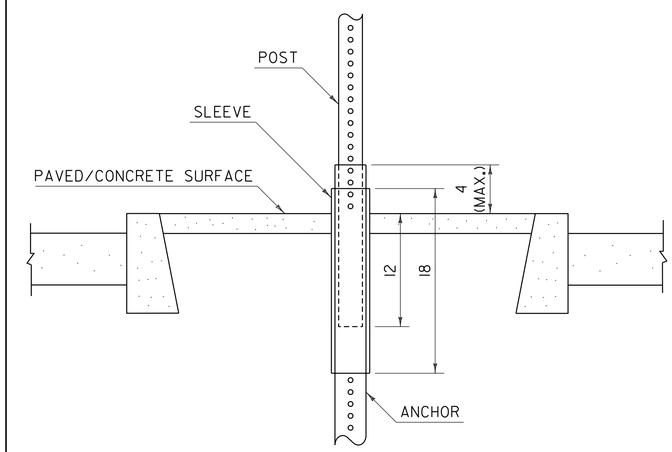

NOTES:

1. A SLEEVE SHALL BE INSTALLED FOR SIGN INSTALLATIONS IN CONCRETE OR PAVEMENT.
2. THE SLEEVE SHALL BE 18 INCHES MINIMUM IN LENGTH.
3. THREE INCH SLEEVES THAT DO NOT HAVE HOLES WILL REQUIRE THAT 7/16 INCH HOLES ARE DRILLED TO FACILITATE CONNECTIONS.
4. REFER TO CURRENT EDITION OF THE "VERMONT AGENCY OF TRANSPORTATION STANDARD SPECIFICATIONS FOR CONSTRUCTION" FOR MATERIAL REQUIREMENTS.

POST SPACING DETAILS

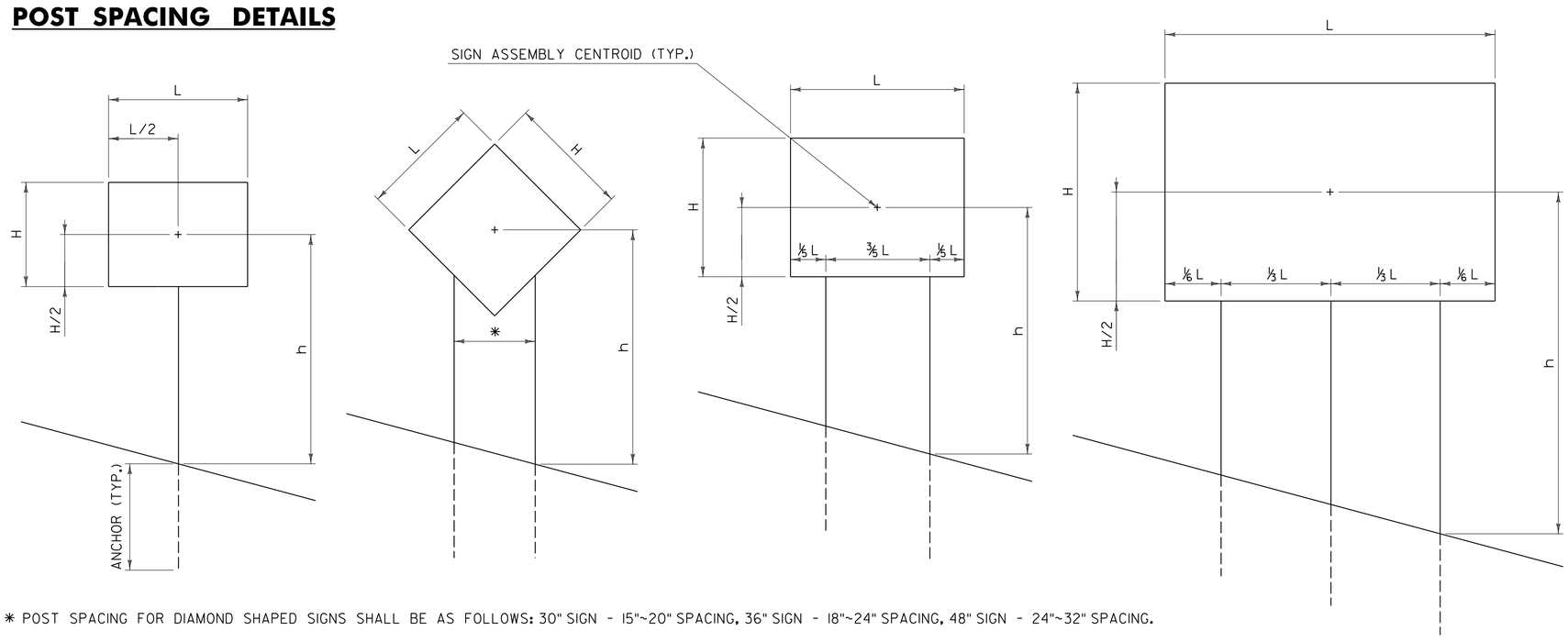

* POST SPACING FOR DIAMOND SHAPED SIGNS SHALL BE AS FOLLOWS: 30" SIGN - 15"~20" SPACING, 36" SIGN - 18"~24" SPACING, 48" SIGN - 24"~32" SPACING.

GENERAL NOTES:

1. ALL SQUARE TUBE STEEL POSTS AND ANCHORS SHALL BE FORMED INTO A SIZE AND SHAPE IN SUCH A MANNER THAT NEITHER FLASH NOR WELD SHALL INTERFERE WITH THE TELESCOPING PROPERTIES, NOR DAMAGE THE GALVANIZING.
2. ANCHORS MAY BE DRIVEN OR SET INTO A DUG HOLE AND BACKFILLED. IF DRIVEN, A DRIVING CAP SHALL BE USED. THE DUG HOLE INSTALLATION METHOD SHALL BE UTILIZED IN AREAS WITH POOR SOIL CONDITIONS OR AS DIRECTED BY THE ENGINEER. BACKFILL SHALL BE COMPACTED AS DIRECTED BY THE ENGINEER.
3. THE TOPS OF SIGN POSTS SHALL BE AT OR NEAR THE TOP OF SIGN. THE POST SHALL NOT EXTEND ABOVE THE TOP OF SIGN.
4. SIGN POSTS SHALL BE INSTALLED A MINIMUM OF ONE FOOT BELOW GROUND, INSIDE THE ANCHOR. THE LENGTH OF ANCHOR EXPOSED ABOVE GROUND SHALL NOT EXCEED FOUR INCHES.
5. ALL DIMENSIONS SHOWN IN INCHES.

OTHER STDS. REQUIRED: **NONE**

REVISIONS AND CORRECTIONS

JAN. 2, 2013 - ORIGINAL APPROVAL DATE

APPROVED

HIGHWAY SAFETY & DESIGN ENGINEER

DIRECTOR OF PROGRAM DEVELOPMENT

Mark D. Richter

FEDERAL HIGHWAY ADMINISTRATION

SQUARE TUBE SIGN POST AND ANCHOR

VERMONT AGENCY OF TRANSPORTATION

STANDARD

T-45