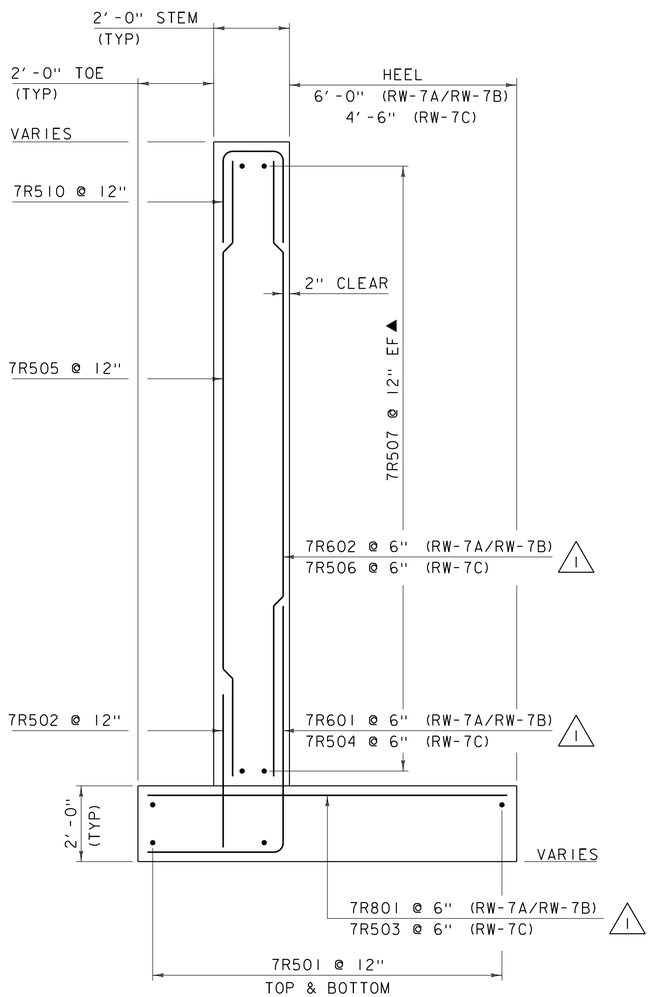

RETAINING WALL #7 TYPICAL

SCALE ½ = 1'-0"

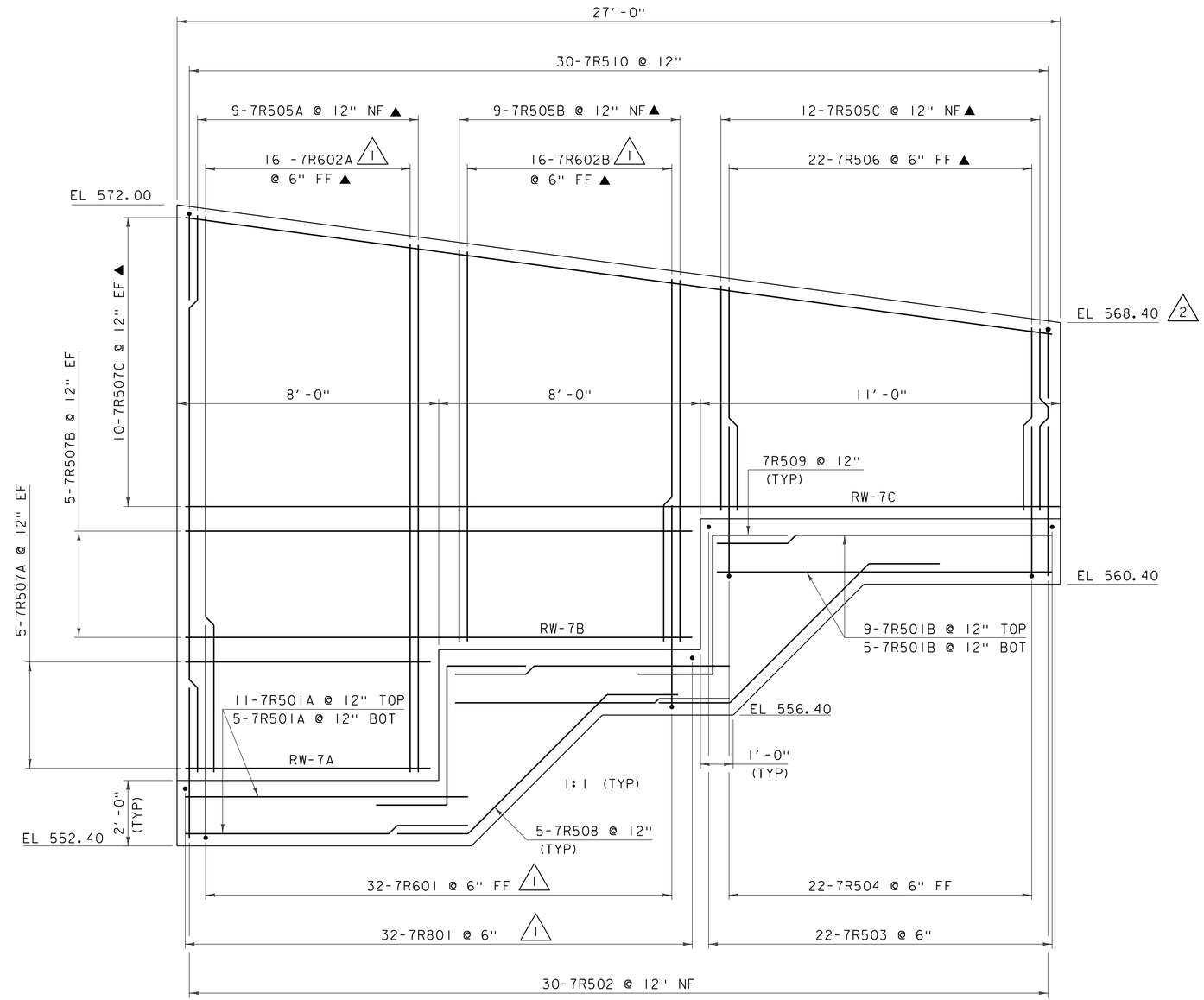

RETAINING WALL #7 ELEVATION

SCALE ½ = 1'-0"

REVISION	DATE	DESCRIPTION	BY
1	03-05-2015	BAR CHANGES PER DESIGN	JS
2	04-23-2015	REVISED END ELEVATION	JS

NOTE:

NF = NEAR FACE
FF = FAR FACE
EF = EACH FACE
▲ = CUT TO FIT IN FIELD
3" CLEAR, UNLESS OTHERWISE SPECIFIED ON THE PLANS.
2'-2" LAP FOR #5 BAR
2'-7" LAP FOR #6 BAR
3'-5" LAP FOR #7 BAR
4'-6" LAP FOR #8 BAR

PROJECT NAME: HARTFORD
PROJECT NUMBER: IM 091-2(79)

FILE NAME: s12a132retwall.dgn
PROJECT LEADER: K. HIGGINS
DESIGNED BY: G. LAROCHE
RETAINING WALL #7

PLOT DATE: 23-APR-2015
DRAWN BY: J. SALVATORI
CHECKED BY: J. GRIGAS
SHEET 123 OF 166