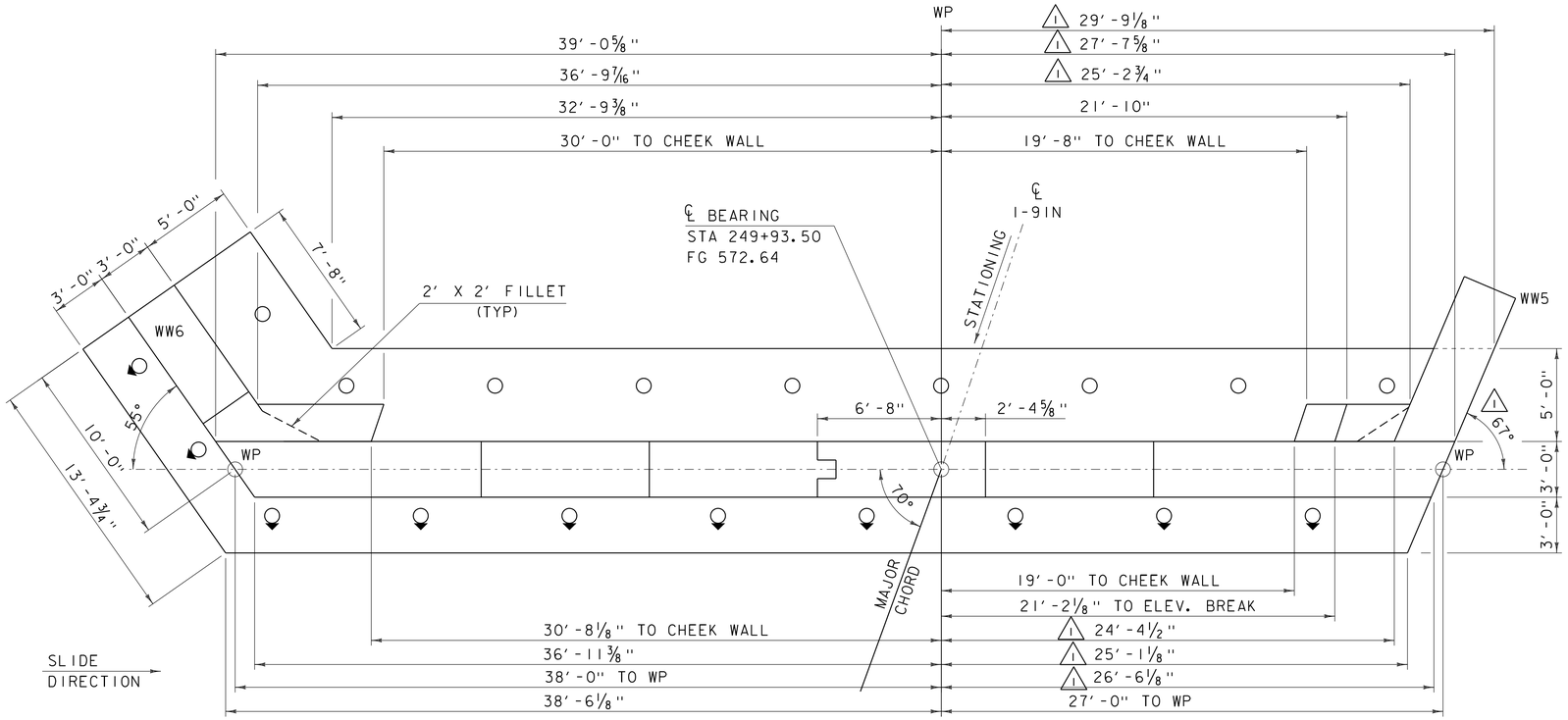

ABUTMENT 3 PLAN

SCALE: 1/4" = 1'-0"

BRIDGE SEAT ELEVATIONS

GIRDER	ELEVATION
G1	568.65
G2	568.20
G3	567.74
G4	567.29
G5	566.83
G6	566.38

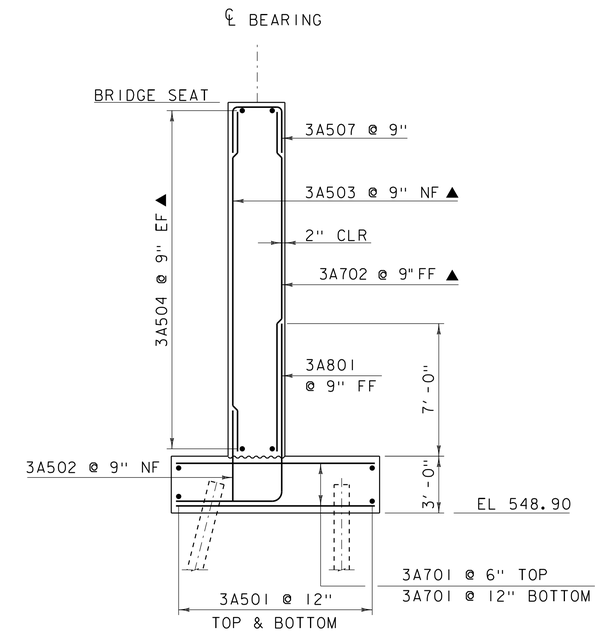

ABUTMENT 3 TYPICAL

SCALE: 1/4" = 1'-0"

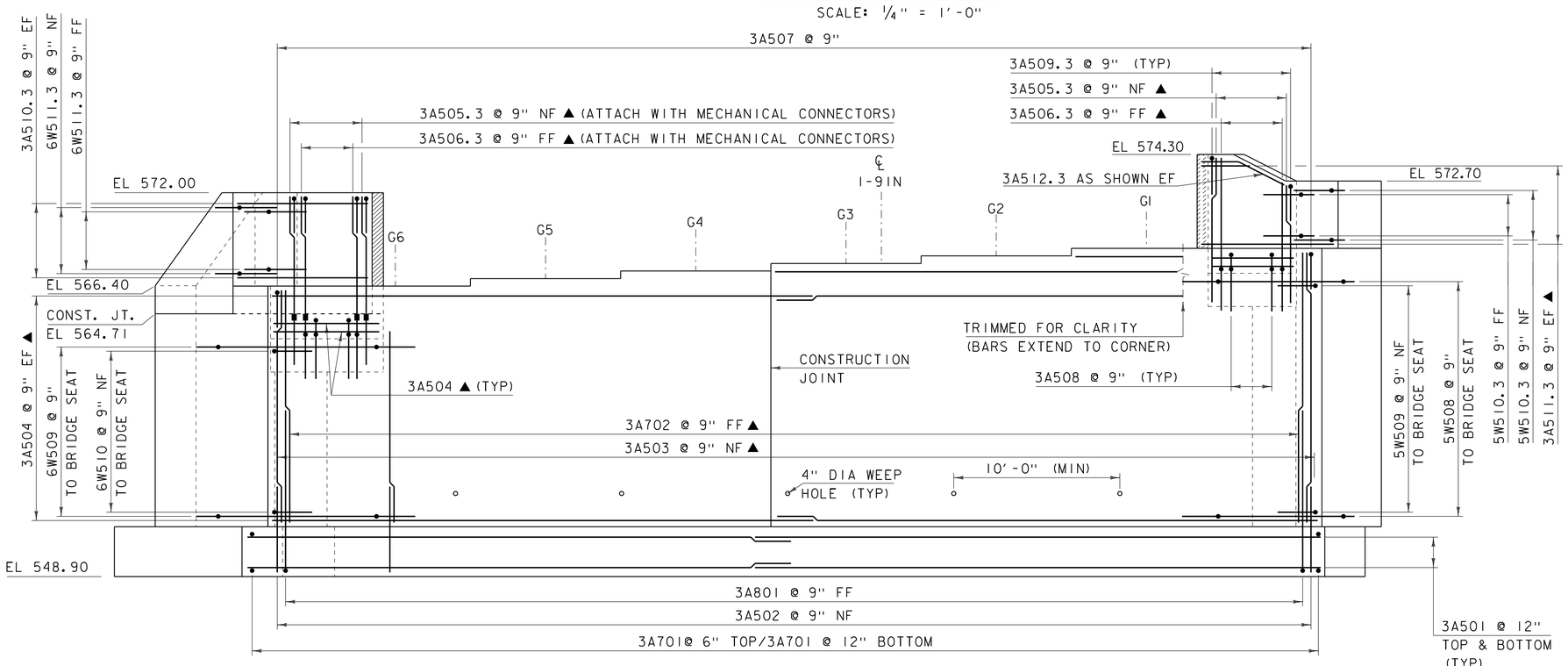

ABUTMENT 3 ELEVATION

SCALE: 1/4" = 1'-0"

REVISION	DATE	DESCRIPTION	BY
1	04-23-2015	WINGWALL 5 ROTATED 5 DEGREES	JS

NOTE:

NF = NEAR FACE
FF = FAR FACE
EF = EACH FACE
▲ = CUT TO FIT IN FIELD
▬ = MECHANICAL CONNECTOR
3" CLEAR, UNLESS OTHERWISE SPECIFIED ON THE PLANS.
2'-2" LAP FOR #5 BAR
2'-7" LAP FOR #6 BAR
3'-5" LAP FOR #7 BAR
4'-6" LAP FOR #8 BAR

PROJECT NAME: HARTFORD
PROJECT NUMBER: IM 091-2(79)

FILE NAME: s12a132sub_ab3
PROJECT LEADER: K. HIGGINS
DESIGNED BY: G. LAROCHE
ABUTMENT 3

PLOT DATE: 23-APR-2015
DRAWN BY: J. SALVATORI
CHECKED BY: G. LAROCHE
SHEET 109 OF 166